NOTES:-

1. APPLICABLE STANDARDS/SPECIFICATIONS:
   A. DOD-STD-00100D(AR)
   B. MIL-T-31000 (I)
2. MATERIAL:
   ALUMINUM SHEET
   6061-T651
   .375 THICK
3. X SYMBOL MEANS AMOUNT OF TIMES OR PLACES USED.
4. BREAK ALL CORNERS AND SHARP EDGES.
5. WELD SYMBOLS AMERICAN WELDING SOCIETY NO. A2.1-86
6. ALL WELD SIZES ARE MINIMUM.

LIST OF MATERIALS				
ITEM NO.	NO. REQD.	DESCRIPTION	PART NO.	COMPANY
1	1	BRACKET	17653	
2	4	12MM NOM		LOCKWASHER
3	4	12MMx1.75x40MM LG		SOC.HD CAP. SCR

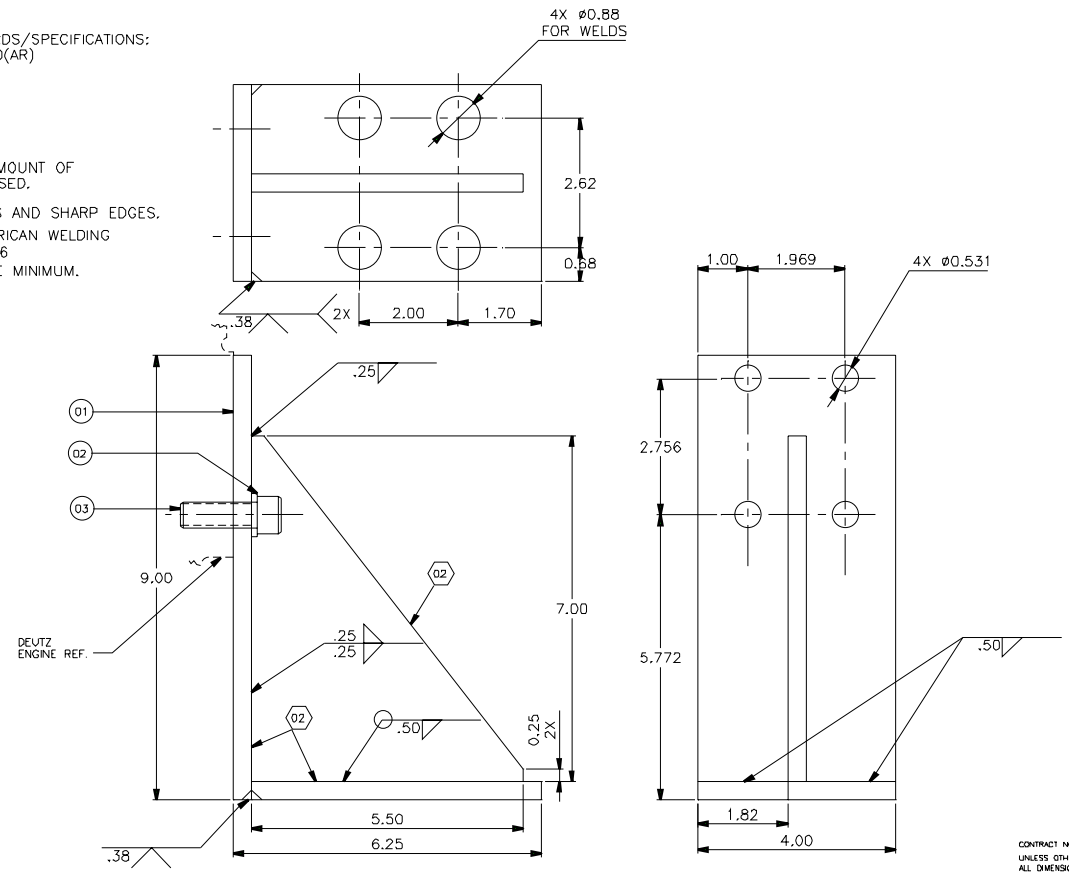

CONTRACT NO.DTCG23-91-C-EC1071

UNLESS OTHERWISE SPECIFIED
ALL DIMENSIONS ARE IN INCHES.
TOLERANCES: DIM. XX.06 XXX.010
ANG.

DICHROMA, INCORPORATED
ALEXANDRIA, VIRGINIA
(703) 921-1440

CONSULTANTS

U. S. COAST GUARD
CIVIL ENGINEERING
WASHINGTON, DC

USCG. COMDT G-SEC-2
2100 2ND STREET SW
WASHINGTON, DC 20593-0001

ISSUE		
01	07/17/01	LV
MARK	DATE	DESCRIPTION

A/E PROJECT NO: 254
CAD FILE NAME: 217653001
DESIGNED BY: MPC
DRAWN BY: PAT
EDITED BY:
CHECKED BY:

SCALE: 1" = 1'-0" PLOT SCALE:

SHEET TITLE

G-SEC-2C
WASHINGTON DC

BR MTR MNT HYD PUMP END

REVIEWED BY:	REVIEWED BY	REVIEWED BY:
PROJECT ENG.	BRANCH CHIEF	G-ECV-3D
CHIEF, CIVIL ENG		12/16/91 DATE

PROJECT NUMBER	DRAWING NUMBER
	17653
DISCIPLINE/SHT NO	
98-	SHEET 1 OF 1