LIST OF MATERIAL				
ITEM NO.	NO. REQD.	DISCRIPTION	PART NO.	COMPANY
1	1	BASE R.H.	17651-2	
2	2	SHACKLE 5/8 X 3 1/4	NO. G-209	CROS BY GROUP
3	1	BASE L.H.	17651-1	CROS GROUP
2	2	SHACKLE 5/8 X 3 1/4	NO. G-209	CROS BY GROUP

NOTES:

1. APPLICABLE STANDARDS/SPECIFICATIONS:
   A. DOD-STD-00100D(AR)
   B. MIL-T-31000(I)

(2) MATERIAL:
ALUMINUM I BEAM
6061-T651
6.00 X 1.90 WEB X 4.00 WIDE

(3) MATERIAL:
ALUMINUM SHEET
6061-T6
.375 THICK

5. BREAK ALL CORNERS AND SHARP EDGES
6. WELD SYMBOLS AMERICAN WELDING SOCIETY NO. A2.1-86
7. ALL WELD SIZES ARE MINIMUM

(4) MATERIAL:
ALUMINUM ANGLE
6061-T6
2.50 X 1.75 X .25 THICK X 5.56 WIDE

8. X SYMBOL MEAN AMOUNT OF TIMES OR PLACES USED.

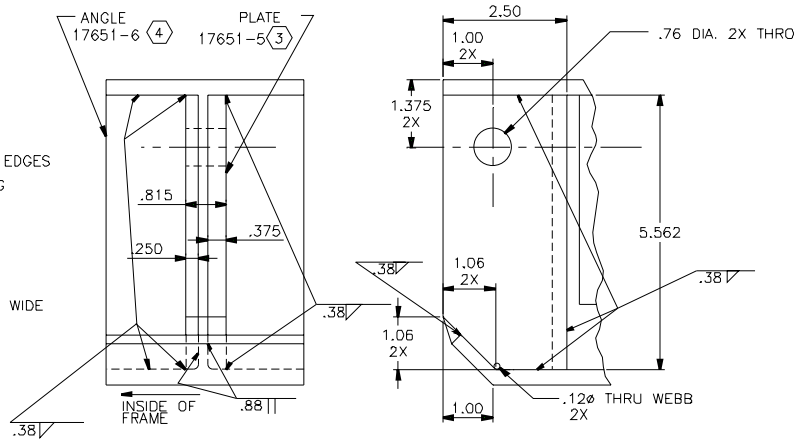

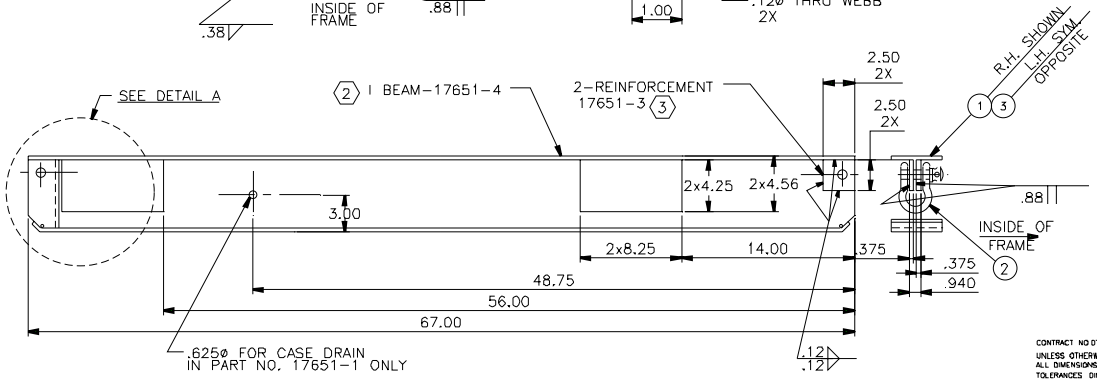

CONTRACT NO DTCG23-91-C-EC1071
UNLESS OTHERWISE SPECIFIED:
ALL DIMENSIONS ARE IN INCHES.
TOLERANCES DIM. XX± 0.5
ANG.

DICHROMA, INCORPORATED
ALEXANDRIA, VIRGINIA
(703) 921-1440

CONSULTANTS

U. S. COAST GUARD
CIVIL ENGINEERING
WASHINGTON, DC

USCG. COMDT G-SEC-2
2100 2ND STREET SW
WASHINGTON, DC 20593-0001

ISSUE

MARK	DATE	DESCRIPTION
01	07/17/01	LV

A/E PROJECT NO 254
CAD FILE NAME: 217651D01
DESIGNED BY: M.P.C.
DRAWN BY PAT
EDITED BY:
CHECKED BY:

SCALE: 1/4"/AS NOTED-PLOT SCALE:

SHEET TITLE

G-SEC-2C
WASHINGTON DC

BASE, CAGE SUPPORT BEAM

REVIEWED BY:	REVIEWED BY:	REVIEWED BY:
PROJECT ENG	BRANCH CHIEF	G-ECV-3D
CHIEF, CIVIL ENG		12/17/91 DATE

PROJECT NUMBER	DRAWING NUMBER
	17651
DISCIPLINE/SHT NO	
98-	SHEET 1 OF 1