NOTES
1. APPLICABLE STANDARDS/SPECIFICATIONS:
   A. DOD-STD-001000(AR)
   B. MIL-F-3100D
2. WELD SYMBOLS AMERICAN WELDING SOCIETY NO A2.1-86
3. ALL WELD SIZES ARE MINIMUM
4. BREAK ALL CORNERS AND SHARP EDGES
5. X SYMBOL MEANS AMOUNT OF TIMES OR PLACES USED.

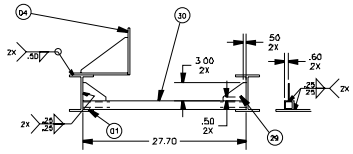

SECTION A-A
FROM SHT.1

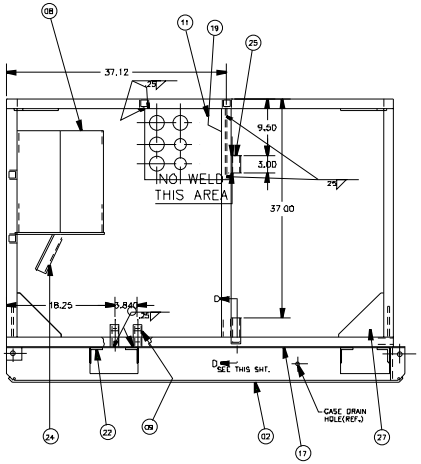

FRONT VIEW

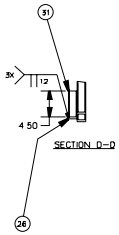

SECTION D-D

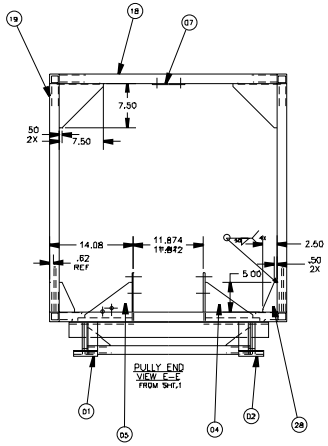


CONTRACT NO.DTCG23-91-C-EC1071
UNLESS OTHERWISE SPECIFIED
ALL DIMENSIONS ARE IN INCHES.
TOLERANCES: DIM XX±.03
ANG

DICHROMA, INCORPORATED
ALEXANDRIA, VIRGINIA
(703) 921-1440

CONSULTANTS

U. S. COAST GUARD
CIVIL ENGINEERING
WASHINGTON, DC

USCG. COMDT G-SEC-2
2100 2ND STREET SW
WASHINGTON, DC 20593-0001

| ISSUE | | |
|---|---|---|
| 01 | 07/17/01 | LV |
| MARK | DATE | DESCRIPTION |

A/E PROJECT NO 254
CAD FILE NAME: Z17650D02
DESIGNED BY: M.P.C.
DRAWN BY: GCS
EDITED BY:
CHECKED BY:

SCALE: 1/8" = 1'-0" PLOT SCALE:

SHEET TITLE

G-SEC-2C
WASHINGTON DC

CAGE ASSY HYD PWR SRCE

| REVIEWED BY: | REVIEWED BY: | REVIEWED BY: |
|---|---|---|
| PROJECT ENG. | BRANCH CHIEF | G-ECV-3D |
| CHIEF, CIVIL ENG | | DATE |

| PROJECT NUMBER | DRAWING NUMBER |
|---|---|
| | 17650 |
| DISCIPLINE/SHT NO | |
| 98- | SHEET 2 OF 2 |