NOTE .

1. APPLICATION STANDARDS / SPECIFICATIONS
   A. DOD-STD-00100D(AR)
   B. MIL- T- 31000(1)

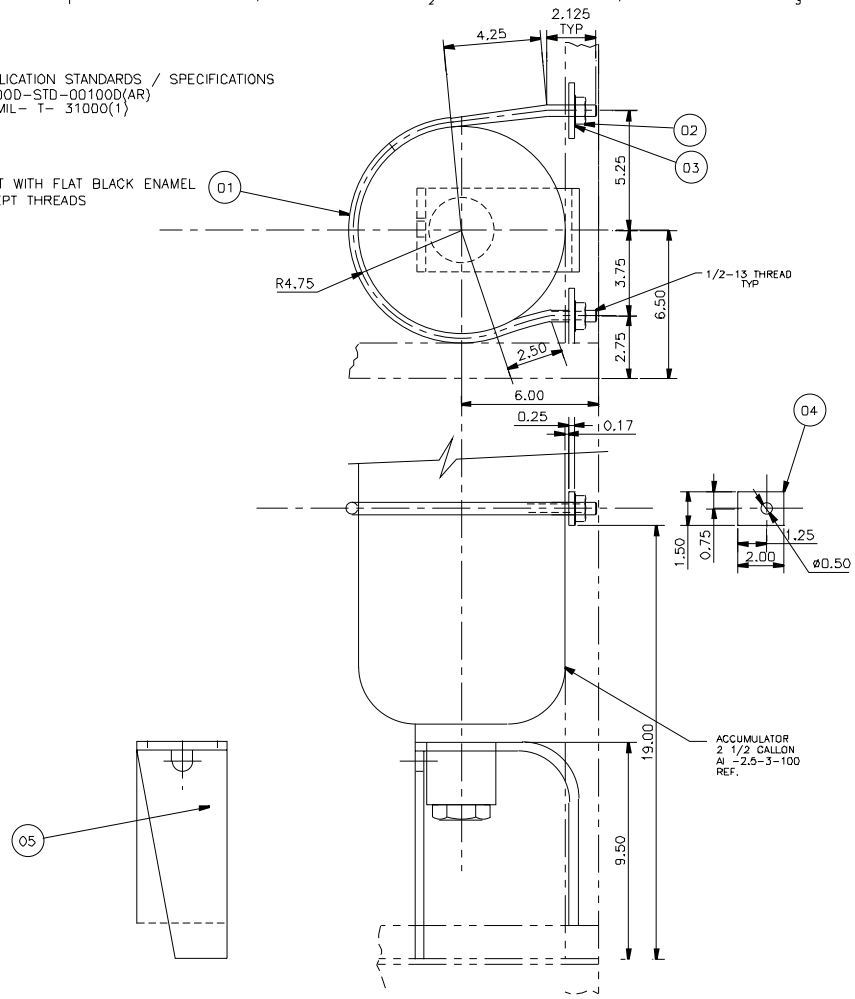

LIST OF MATERIALS				
ITEM NO	NO RECORD	DESCRIPTION	PART NO.	COMPANY
1	1	u - BOLT		1/2 ø 28" LG.
2	2	1/2- 13 HEX NUT		
3	2	1/2 FLAT WASHER		
4	2	BLOCK ACCUMULATOR	17666	
5	1	STAND ACCUMULATOR	17660	

CONTRACT NO DTCG23-91-C-EC1071

UNLESS OTHERWISE SPECIFIED:
ALL DIMENSIONS ARE IN INCHES.
TOLERANCES DIM. XX±.03
ANG.

DICHROMA, INCORPORATED
ALEXANDRIA, VIRGINIA
(703) 821-1440

CONSULTANTS

U. S. COAST GUARD
CIVIL ENGINEERING
WASHINGTON, DC

USCG, COMDT G-SEC-2
2100 2ND STREET SW
WASHINGTON, DC 20593-0001

ISSUE

MARK	DATE	DESCRIPTION
01	07/17/01	LV

A/E PROJECT NO: 254
CAD FILE NAME 217613001
DESIGNED BY: M.P.C.
DRAWN BY TATU
EDITED BY:
CHECKED BY:

SCALE: 1/2" = 1'-0" PLOT SCALE:

SHEET TITLE

G-SEC-2C
WASHINGTON DC

STAND ASS'Y ACCUMLTR

REVIEWED BY | REVIEWED BY | REVIEWED BY:
PROJECT ENG. | BRANCH CHIEF | G-ECV-3D
CHIEF, CIVIL ENG | DATE

PROJECT NUMBER | DRAWING NUMBER
17613

DISCIPLINE/SHT NO
98-

SHEET 1 OF 1