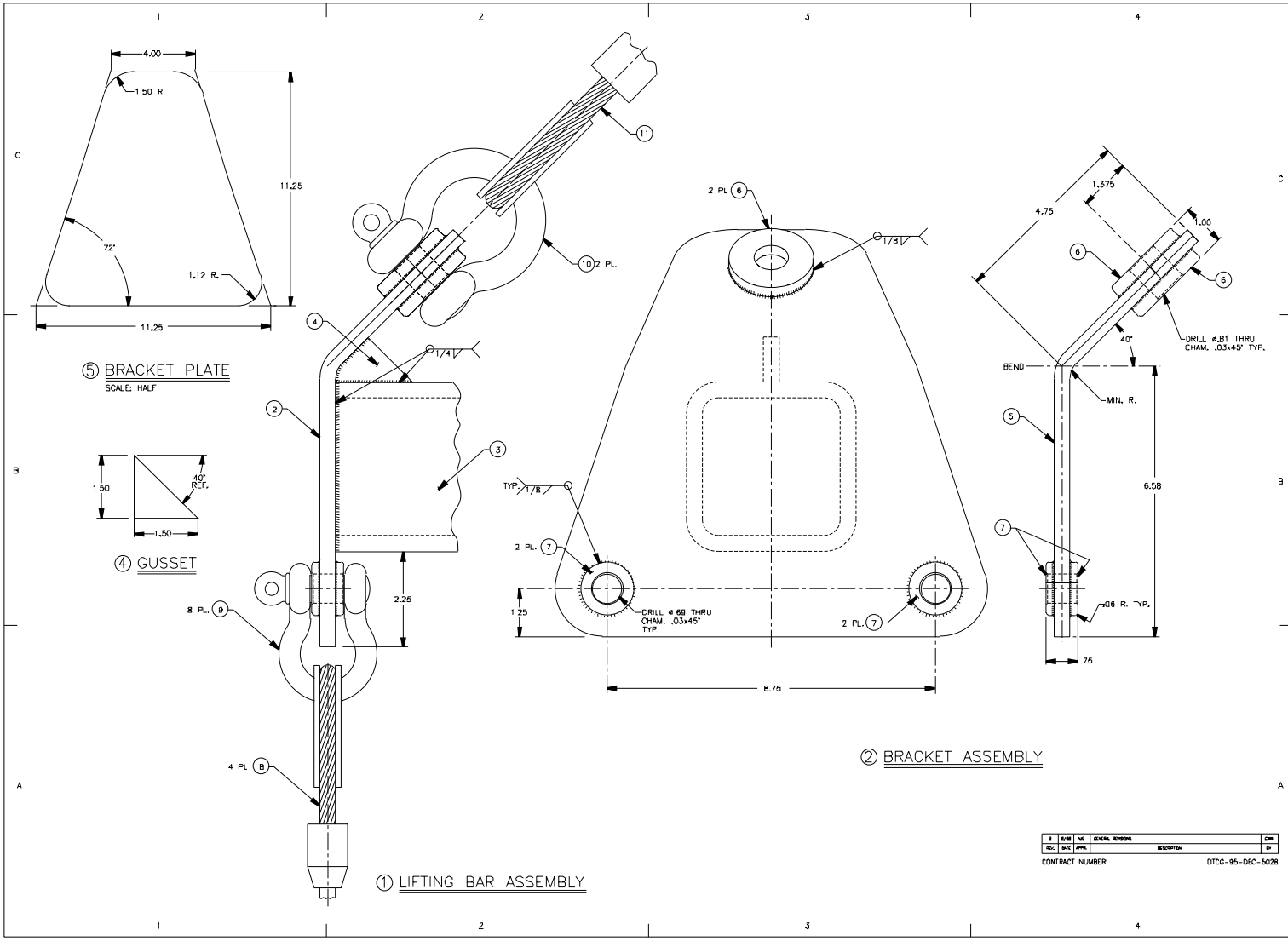

REV.	DATE	APPR.	DESCRIPTION	CHK
0	6/98	AJG	GENERAL REVISIONS	CWB

CONTRACT NUMBER DTCG-95-DEC-5028

DICHROMA, INCORPORATED
ALEXANDRIA, VIRGINIA
(703) 921-1440

CONSULTANTS

U. S. COAST GUARD
CIVIL ENGINEERING
WASHINGTON, DC

USCG. COMDT G-SEC-2
2100 2ND STREET SW
WASHINGTON, DC 20593-0001

ISSUE

MARK	DATE	DESCRIPTION
01	06/01/01	LV

A/E PROJECT NO: 236
CAD FILE NAME: Z1725FSR1102002
DESIGNED BY: -
DRAWN BY: -
EDITED BY:
CHECKED BY: -

SCALE: FULL PLOT SCALE:

SHEET TITLE

FAST SWEEP
G-SEC-2C
WASHINGTON DC

LIFTING BAR ASSY.

REVIEWED BY:	REVIEWED BY	REVIEWED BY:
PROJECT ENG.	BRANCH CHIEF	G-SEC-2
CHIEF, CIVIL ENG		DATE

PROJECT NUMBER	DRAWING NUMBER
98-	1725FSR1102
DISCIPLINE/SHT NO	SHEET 2 OF 2