PARTS LIST									
QTY REQD		CAGE CODE	S/W	PART OR IDENTIFYING NO	NOMENCLATURE OR DESCRIPTION	MATERIAL SPECIFICATION	ZONE	ITEM NO.
				FSR-08-1	ALTER FROM BATAVIA METAL PROD. NO 2499	CS		1

ALTERED ITEM DRAWING

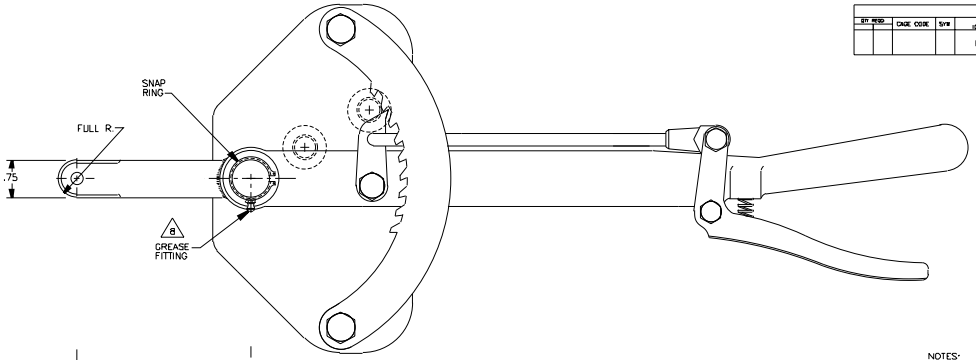

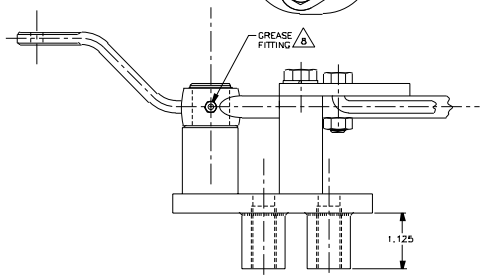

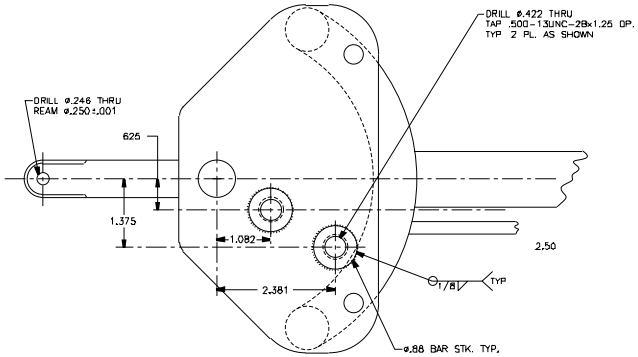

NOTES:

1. INTERPRET DRAWING PER MIL-STD-100E
2. UNLESS OTHERWISE SPECIFIED:
   A. BREAK ALL SHARP EDGES .005-.015R.
   B. FILLET RADII: .01-.02R.
   C. SURFACE FINISH 125 √
   D. ALL FLAME OR SAW CUT EDGES SHALL BE GROUND SMOOTH.
3. WELDING: SMAW PROCESS PER AWS D14.6, USING E7018 LOW-HYDROGEN ELECTRODES PER AWS A5.5 AND MIL-E-22200/1. REMOVE ALL FLUX AND SPLATTER AFTER WELDING.
4. FINISH PER OSI-SPEC-1000A.
5. PRE-LUBRICATE OPERATING LEVER SHAFT WITH WATER-RESISTANT GREASE AFTER FINISH IS FULLY CURED.
6. ONLY THE ITEM DESCRIBED ON THIS DRAWING WHEN PROCURED FROM THE VENDOR LISTED HEREON IS APPROVED BY THE COGNIZANT DESIGN ACTIVITY FOR USE IN THE APPLICATION SPECIFIED HEREON. A SUBSTITUTE ITEM SHALL NOT BE USED WITHOUT PRIOR APPROVAL OF THE COGNIZANT DESIGN ACTIVITY
7. IDENTIFICATION OF THE APPROVED SOURCE OF SUPPLY HEREON IS NOT TO BE CONSTRUED AS A GUARANTEE OF PRESENT OR CONTINUED AVAILABILITY AS A SOURCE OF SUPPLY FOR THE ITEM DESCRIBED ON THE DRAWING.

B. GREASE FITTING: ALEMITE NO. 1966-S.

9. ROUND BAR STOCK SAE 1018

REV.	DATE	APPR.	DESCRIPTION	BY
A	6/98	AJC	GENERAL REVISIONS	CMB

CONTRACT NUMBER DTCG-95-DEC-5028

UNLESS OTHERWISE SPECIFIED
ALL DIMENSIONS ARE IN INCHES.
TOLERANCES FRACTIONS ±1/32 DECIMALS ±.01 ±.006 ANGLES ±1°

DICHROMA, INCORPORATED
ALEXANDRIA, VIRGINIA
(703) 921-1440

CONSULTANTS

U. S. COAST GUARD
CIVIL ENGINEERING
WASHINGTON, DC

USCG. COMDT G-SEC-2
2100 2ND STREET SW
WASHINGTON, DC 20593-0001

ISSUE		
01	06/01/01	LV
MARK	DATE	DESCRIPTION

A/E PROJECT NO: 236
CAD FILE NAME: 21725FSR0801001
DESIGNED BY: RWS
DRAWN BY: JGO
EDITED BY:
CHECKED BY: AJC

SCALE: FULL PLOT SCALE:

SHEET TITLE

G-SEC-2C
WASHINGTON DC

FAST SWEEP
LEVER AND RATCHET ASSY.

REVIEWED BY: REVIEWED BY REVIEWED BY:
PROJECT ENG. BRANCH CHIEF G-SEC-2
CHIEF, CIVIL ENG DATE

PROJECT NUMBER 98- DRAWING NUMBER 1725FSR0801
DISCIPLINE/SHT NO
SHEET 1 OF 1