NOTES:

1. INTERPRET DRAWING PER MIL-STD-100E.
2. UNLESS OTHERWISE SPECIFIED:
   - A. BREAK ALL SHARP EDGES: .005-.015R.
   - B. FILLET RADII: .01-.02R.
   - C. SURFACE FINISH 125
3. MATERIALS:
   - A: DISC: CRES 316 PLATE .437 NOM. THK. PER MIL-S-5059.
   - B. FLANGE: STRUCTURAL CARBON STEEL PLATE .437 NOM THK PER ASTM A36.
   - C. TUBE. AISI 1018 CARBON STEEL ROUND MECHANICAL SEAMLESS COLD DRAWN TUBING 11.50 O.D. NOM. x .375 NOM. WALL.
4. WELDING: CARBON STEEL: SMAW PROCESS PER AWS D14.6. USING E7018 LOW-HYDROGEN ELECTRODES PER AWS A5.5 AND MIL-E-22200/1. STAINLESS STEEL: SMAW PROCESS PER AWS D14.6, USING E316 ELECTRODES PER MIL-E-22200/2 REMOVE ALL FLUX AND SPLATTER AFTER WELDING. ALL JOINTS SHALL BE WIRE BRUSHED, CLEAN OF ALL SLAG, DE-GREASED AND DYE PENETRANT INSPECTED PER AWS D14.6.
5. FINISH: MASK ALL STAINLESS STEEL SURFACES AND FINISH PER OSI-SPEC-1000A.

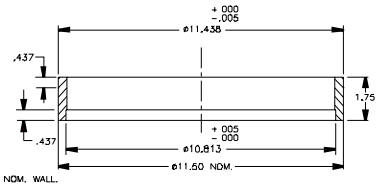

④ TUBE

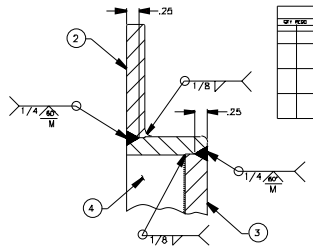

DETAIL-A

SCALE: FULL

PARTS LIST								
QTY REQD		CADE CODE	SYM	PART OR IDENTIFYING NO	NOMENCLATURE OR DESCRIPTION	MATERIAL SPECIFICATION	ZONE	ITEM NO.
				FSR-06-1	DISK ASSY., BRAKE			1
				FSR-06-2	DISC .437 NOM. THK. ø16 1/4" BLANK CRES 316	MIL-S-5059		2
				FSR-06-3	FLANGE PL. .437 NOM. THK. ø11 3/4" BLANK	ASTM A36		3
				FSR-06-4	TUBE, MECH. TBG. 11.50 OD. x .375 W. AISI 1018	ASTM A519		4

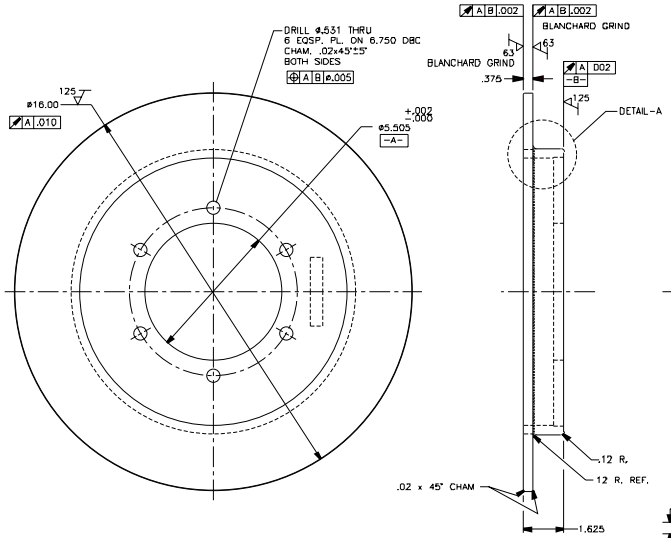

① DISC ASSEMBLY

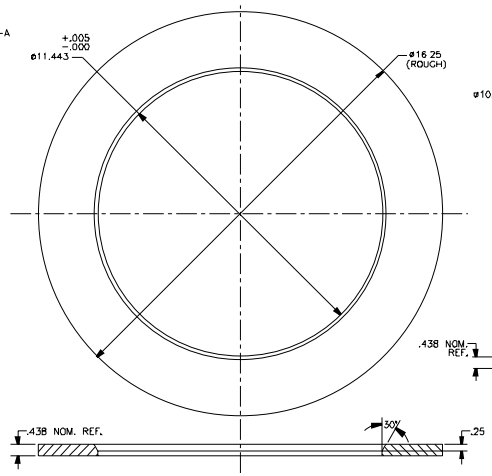

② DISC

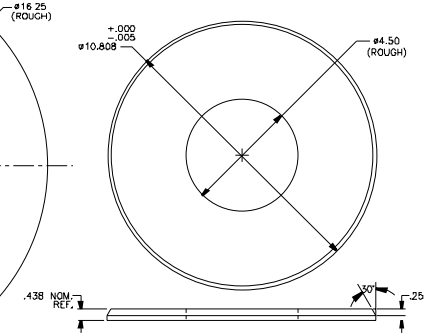

③ FLANGE

REV.	DATE	APPR.	DESCRIPTION	CHK
A	6/98	AJC	GENERAL REVISIONS	CHK

CONTRACT NUMBER DTCG-95-DEC-5028

UNLESS OTHERWISE SPECIFIED
ALL DIMENSIONS ARE IN INCHES.
TOLERANCES FRACTIONS ±1/32 DECIMALS ±.01 ±.005 ANGLES ±1°

DICHROMA, INCORPORATED
ALEXANDRIA, VIRGINIA
(703) 921-1440

CONSULTANTS

U. S. COAST GUARD
CIVIL ENGINEERING
WASHINGTON, DC

USCG. COMDT G-SEC-2
2100 2ND STREET SW
WASHINGTON, DC 20593-0001

ISSUE

MARK	DATE	DESCRIPTION
01	06/01/01	LV

A/E PROJECT NO: 236
CAD FILE NAME: 21725FSR0601001
DESIGNED BY: RMS
DRAWN BY: JGD
EDITED BY:
CHECKED BY: AJC

SCALE: HALF PLOT SCALE:

SHEET TITLE

G-SEC-2C
WASHINGTON DC

FAST SWEEP DISC ASSY BRK

REVIEWED BY:	REVIEWED BY	REVIEWED BY:
PROJECT ENG.	BRANCH CHIEF	G-SEC-2
CHIEF, CIVIL ENG		DATE

PROJECT NUMBER	DRAWING NUMBER
98-	1725FSR0601
DISCIPLINE/SHT NO	SHEET 1 OF 1