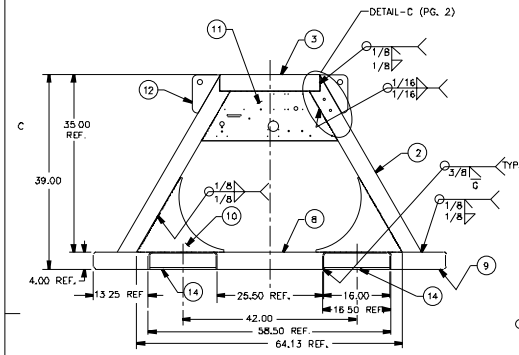

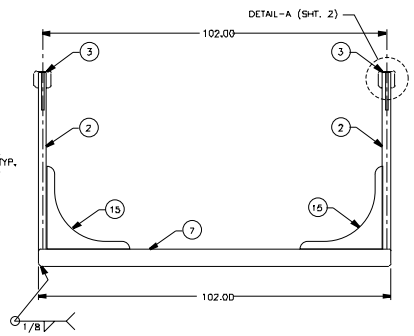

QTY REQD	CAGE CODE	SYM	PART OR IDENTIFYING NO	NOMENCLATURE OR DESCRIPTION	MATERIAL SPECIFICATION	ZONE	ITEM NO.
			FSR-02-1	FRAME ASSY.			1
4			FSR-02-2	LEG RECT STRL. TBG 2"x4"x 1/4" x 49 3/8" L.	ASTM A500		2
2			FSR-02-3	STRUT ASSY.			3
2			FSR-02-4	STRUT SQ STRL. TBG 4"x4"x 1/4"x 24" L.	ASTM A500		4
8			FSR-02-5	SPACER, RND. BAR STK. ø1.00 NOM. x 4" L.	AISI 1018		5
2			FSR-02-6	CHANNEL, FABRICATED 1/4" NOM. PL. x 8.5" L.	ASTM A36		6
2			FSR-02-7	TUBE, BASE RECT STRL. TBG 2" x 4" x 1/4" x 8.5" L.	ASTM A500, GR. B		7
2			FSR-02-8	TUBE, BASE RECT STRL. TBG 2" x 4" x 1/4" x 25 1/2" L	ASTM A500, GR. B		8
4			FSR-02-9	TUBE, BASE RECT. STRL. TBG. 2" x 4" x 1/4" x 13 1/4" L.	ASTM A500, GR. B		9
4			FSR-02-10	GUSSET PL. .25 NOM. THK. 21" x 18.25"	ASTM A36		10
1			FSR-02-11	CONTROL PANEL PL. .125 NOM THK. 33 1/16" x 14 1/2"	ASTM A36		11
4			FSR-02-12	PADEYE PL. .50 NOM. THK. 6 1/2" x 7 1/2"	ASTM A36		12
4			FSR-02-13	PLATE, CLOSURE PL. .25 NOM. 3 1/2" x 3 1/2"	ASTM A36		13
10			FSR-02-14	F.B., 3/8" NOM x 4" W x 16" L.	ASTM A36		14
4			FSR-02-15	GUSSET PL .25 NOM. THK 16 1/4" x 16 1/4"	ASTM A36		15

NOTES:

1. INTERPRET DRAWING PER MIL-STD-100E.
2. UNLESS OTHERWISE SPECIFIED:
   A. BREAK ALL SHARP EDGES: .005- D15R
   B. GRIND ALL FLAME OR SAW CUT EDGES SMOOTH.
   C MACHINE SURFACE FINISH 125
   D. ALL THREADED HOLES SHALL BE RE-TAPPED AFTER FINISH CURES
3. MATERIALS: ALL MATERIALS SHALL BE OF NEW MANUFACTURE STRUCTURAL STEEL SHALL COMPLY WITH THE PROVISIONS OF ASTM A36 STRUCTURAL TUBING SHALL BE ERW .250 NOM. THK WALL PER ASTM A500, GR. B. MILL TEST CERTIF. REQUIRED FOR ALL MATERIALS INCLUDING WELDING FILLER METAL
4. WELDING: SMAW PROCESS PER AWS D14.1. USING E7018 LOW-HYDROGEN ELECTRODES PER AWS A5.5 AND MIL-E-22200/1. REMOVE ALL FLUX AND SPLATTER. ALL JOINTS SHALL BE WIRE BRUSHED. CLEAN OF ALL SLAG, DE-GREASED AND DYE PENETRANT INSPECTED PER AWS D14.1.
5. ITEM 11, CONTROL PANEL, SHALL BE MACHINED BEFORE WELDING.
6. FABRICATE AND MACHINE ITEM 3, STRUT ASSEMBLY, BEFORE WELDING.
7. FINISH: MASK BOLT HOLES AND FINISH PER THE PROVISIONS OF OSI-SPEC-1000A

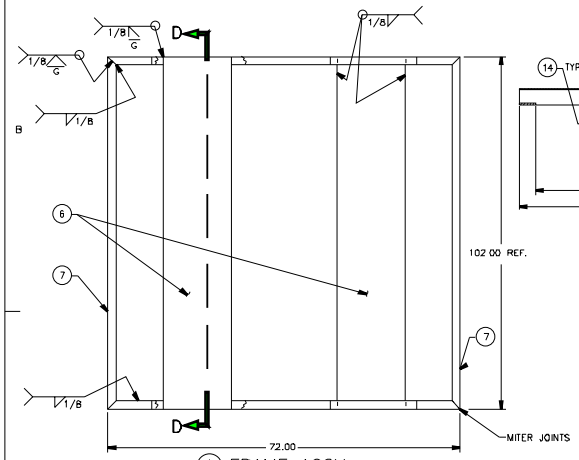

1 FRAME ASSY.

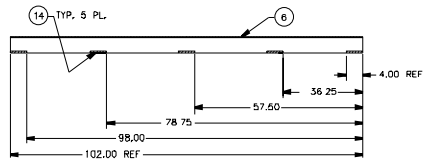

SECTION D-D

(TYP. BOTH CHANNELS)

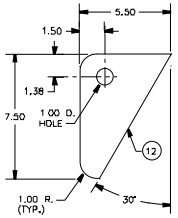

12 PADEYE

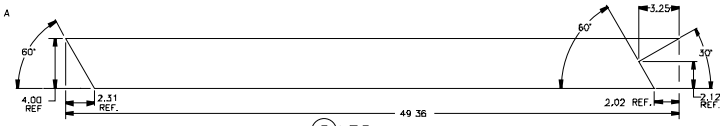

2 LEG

SCALE: 3"=1"

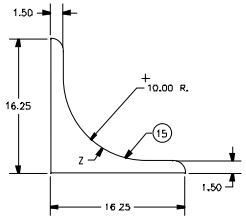

15 FRONT & BACK GUSSET

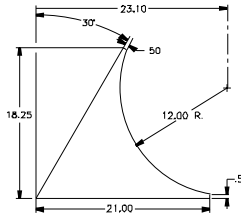

10 GUSSET SIDE

SCALE: 1 1/2"=1"

REV.	DATE	APPR.	DESCRIPTION	BY
A	6/08	AJC	GENERAL REVISIONS	CMB

CONTRACT NUMBER DTCG-92-DEC-5028

UNLESS OTHERWISE SPECIFIED
ALL DIMENSIONS ARE IN INCHES
TOLERANCES FRACTIONS ±1/32 DECIMALS ±.01 ±.005 ANGLES ±1°

DICHROMA, INCORPORATED
ALEXANDRIA, VIRGINIA
(703) 921-1440

CONSULTANTS

U. S. COAST GUARD
CIVIL ENGINEERING
WASHINGTON, DC

USCG. COMDT G-SEC-2
2100 2ND STREET SW
WASHINGTON, DC 20593-0001

ISSUE		
01	06/01/01	LV
MARK	DATE	DESCRIPTION

A/E PROJECT NO: 236
CAD FILE NAME: 21725FSR0201001
DESIGNED BY: RMS
DRAWN BY: JGO
EDITED BY:
CHECKED BY: AJC
SCALE: 1"=1' PLOT SCALE:

SHEET TITLE
G-SEC-2C
WASHINGTON DC

FAST SWEEP FRAME ASSY.

REVIEWED BY: REVIEWED BY: REVIEWED BY:
PROJECT ENG. BRANCH CHIEF G-SEC-2
CHIEF, CIVIL ENG DATE

PROJECT NUMBER 98- DRAWING NUMBER 1725FSR0201
DISCIPLINE/SHT NO
SHEET 1 OF 2