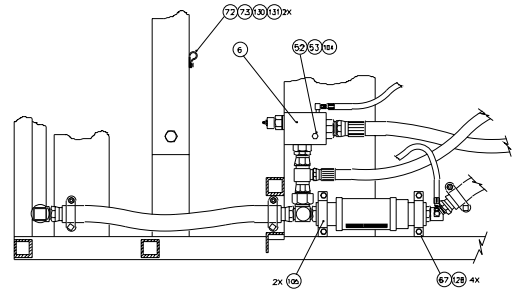

SECTION A–A

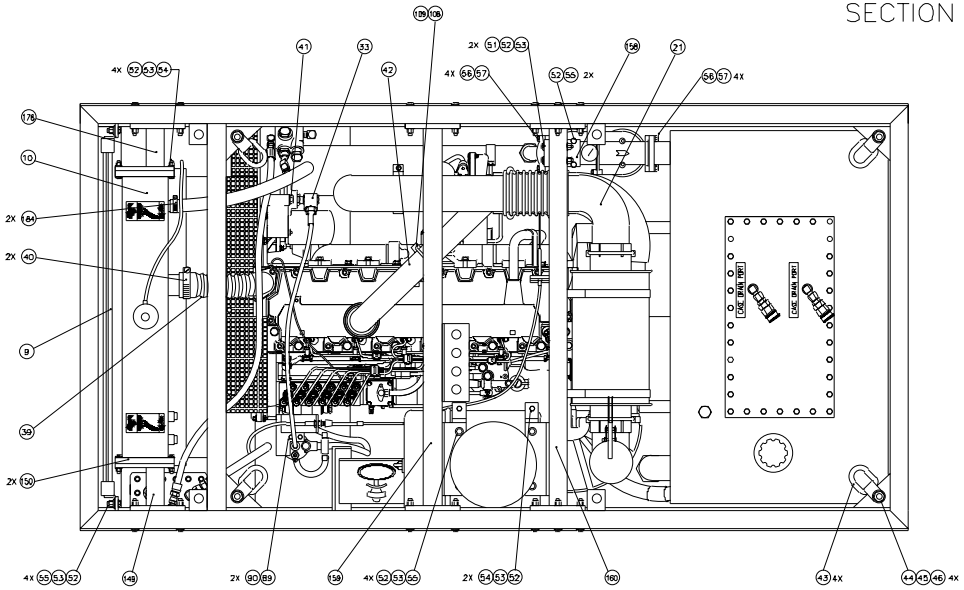

TOP VIEW

SIZE	CAGE CODE	NAME	DRAWING NO	REV
F	0MWH0		82647CG	–

SCALE: 1"=4" SHEET 4 OF 7 CADD

82647CG