NOTES:
1. USE M8 X 1.25 X 20MM HEX HEAD CAP SCREW REFERENCED FIND NO. 173 ON DWG 82647 SHEET 1.
2. USE M8 X 1.25 X 25MM HEX HEAD CAP SCREW REFERENCED FIND NO. 175 ON DWG 82647 SHEET 1.
3. USE M8 X 1.25 X 30MM HEX HEAD CAP SCREW REFERENCED FIND NO. 176 ON DWG 82647 SHEET 1.
4. USE M8 X 1.25 X 75MM HEX HEAD CAP SCREW REFERENCED FIND NO. 174 ON DWG 82647 SHEET 1.

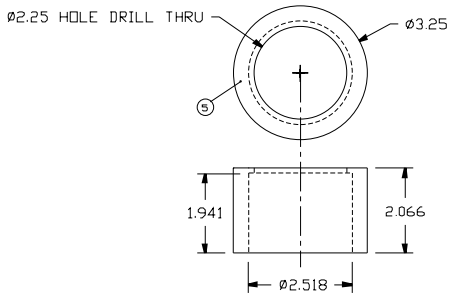

② HOUSING

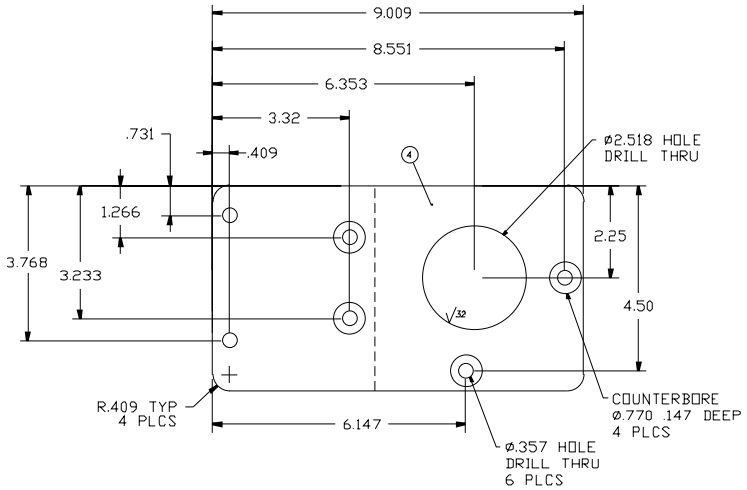

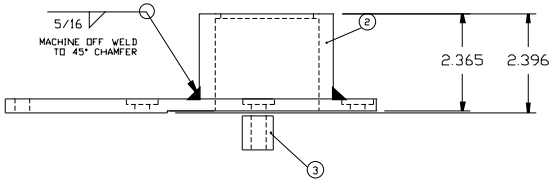

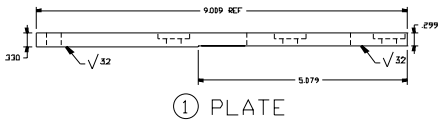

① PLATE

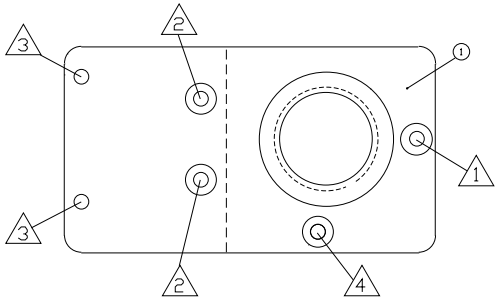

FAN MOUNT ASSEMBLY

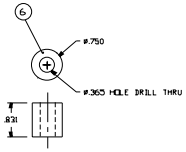

③ SPACER

FIND NO.	QTY REQD	CAGE CODE	PART OR IDENTIFYING NO	NOMENCLATURE OR DESCRIPTION	MATERIAL OR NOTE
6	AR			3/4" ROUND STOCK	STEEL
5	AR			3 1/4" ROUND STOCK	STEEL
4	AR			1/2" PLATE	STEEL
3	1	OMWHO	-3	SPACER	
2	1	OMWHO	-2	HOUSING	
1	1	OMWHO	-1	PLATE	

PARTS LIST

HIGHSTAR INDUSTRIAL TECHNOLOGIES
3501-A BALLARD AVENUE, PORTSMOUTH, VA 23701

U.S. COAST GUARD HEADQUARTERS
CIVIL ENGINEERING

MODEL 82647CG HVPU
FAN MOUNT ASSEMBLY

UNLESS OTHERWISE SPECIFIED, DIMENSIONS ARE IN INCHES AND REFER TO GENERAL TOLERANCES

X DECIMAL	XX DECIMAL	XXX DECIMAL	ANGLE
± .06	± .03	± .010	±2°

BREAK EDGES AND BREAK SHARP EDGES .03 MAX. MARK LEGEND H .125 MIN
SURFACE ROUGHNESS 125
FINISHING 4/1/0

MATERIAL: N/A

DESIGNED: L MURPHY
DRAWN: D CLSON
TRACED:
CHECKED: L MURPHY
REVIEWED BY:
APPROVED BY: GARY VAN HOURIK

CAD FILE NO. 819-1CG
DATE: 2-10-97

SIZE F | CAGE CODE OMWHO | DRAWING NO 826119CG | REV —
SCALE: 1"=1" | SHEET 1 OF 1 | CADD

826119CG