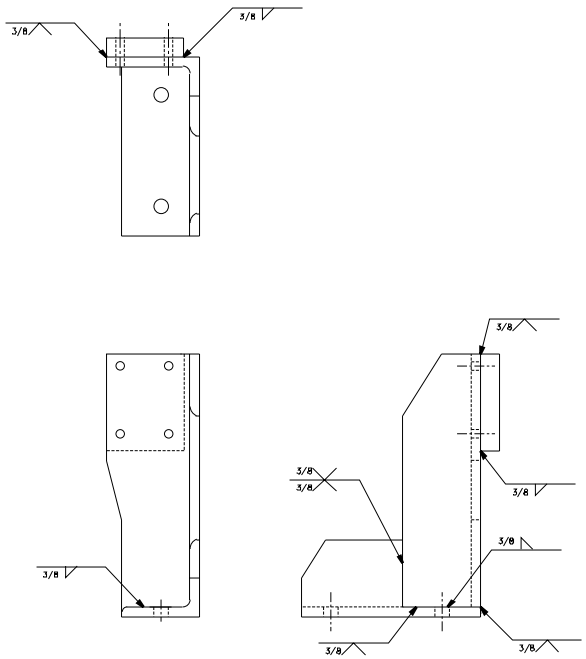

-1 LEFT REAR ENGINE MOUNT (A)
ASSEMBLY

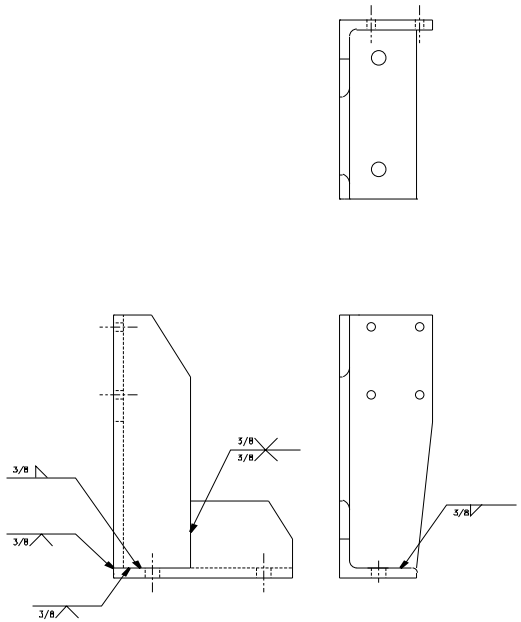

-2 RIGHT REAR ENGINE MOUNT (A)
ASSEMBLY

WELDMENT DRAWING

SIZE	CODE IDENT	SYMB	DRAWING NO	REV
F	OMWHO		826080CG	A
SCALE: 1"=2"			SHEET 4 OF 5	CADD

826080CG
4
A