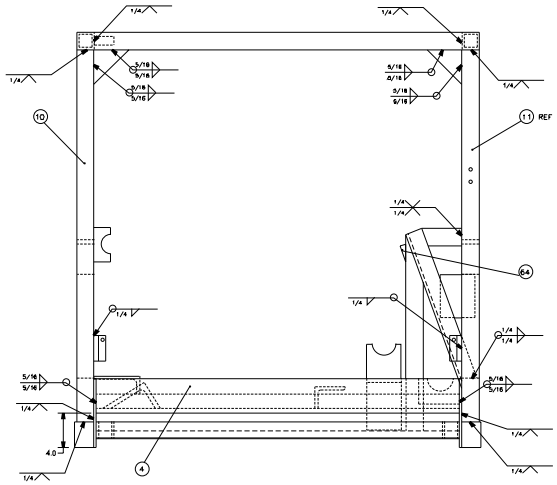

LEFT SIDE VIEW

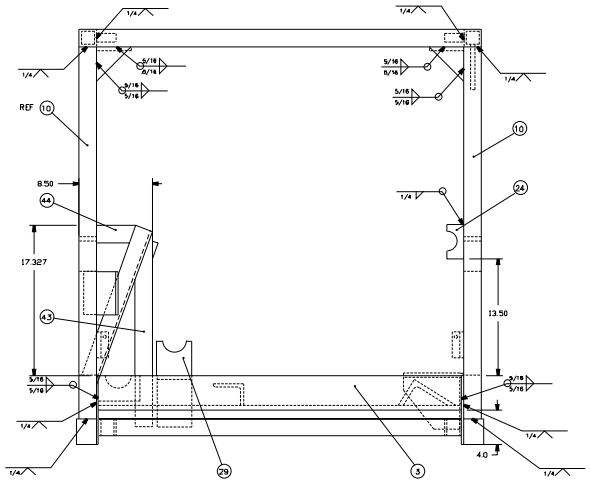

RIGHT SIDE VIEW

SIZE	DWG CODE	SHEET	DRAWING NO.	REV
F	OMWHO		826010CG	–
SCALE: 1"=4"		SHEET 4 OF 8	CADD	

826010CG