NOTES:

1. ITEMS REFERRING TO THIS NOTE MAKE UP THE ANCILLARY AND SPARE PARTS KIT.

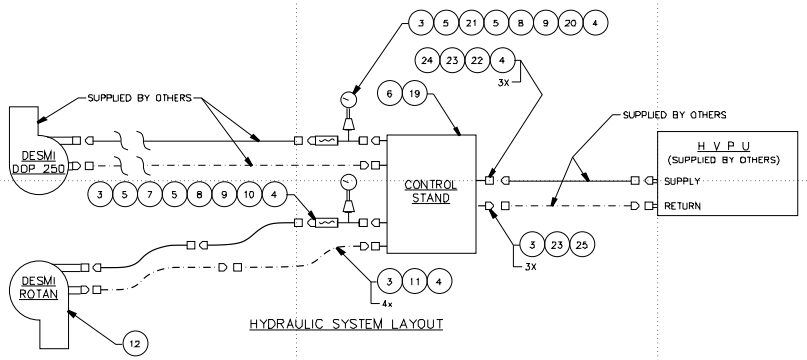

HYDRAULIC SYSTEM LAYOUT

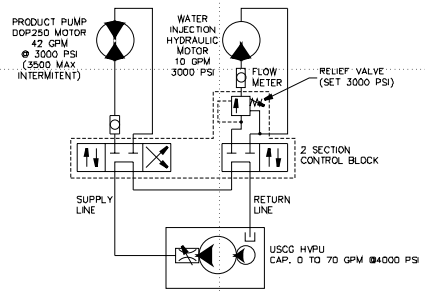

HYDRAULIC CONTROL SYSTEM SCHEMATIC

LENGEND

- FEMALE QUICK DISCONNECT
- MALE QUICK DISCONNECT
- TEE
- REDUCER
- RETURN LINE
- SUPPLY LINE
- PUMP
- GAGE
- FLOW METER

PARTS LIST

FIG NO.	QTY REQD	CAGE CODE	PART OR IDENTIFYING NO.	NOMENCLATURE OR DESCRIPTION	MATERIAL OR NOTE
1	1	70712	71-2N16-16F	SNAP TITE MALE OD, 1"	NOTE 1
2	1	70712	71-2C16-16F	SNAP TITE FEMALE OD, 1"	NOTE 1
3	9	01276	5602-16-16-259	QUICK DISCONNECT, 1", MALE HALF	SSF
4	9	01276	F056-1239-16-165	QUICK DISCONNECT, 1", FEMALE HALF, LOCKING	SSF
5	4	01276	2083-16-16-259	PIPE NIPPLE, 1"	SSF
6	1	7V940	V40-###/RP30A2200-W4-SSW/RP60	CRESEN 2 SECTION CONTOL VALVE	
7	1	70712	H761-020-B	HYDRAULIC FLOW METER, 20 GPM	
8	2	01276	2256-16-16-259	TEE, 1", EXTERNAL PIPE/INTERNAL PIPE	SSF
9	2	01276	2081-16-8-259	REDUCER, 1 x 1/2	SSF
10	1		PM-25C1	GAGE, 0-3000, 2.5" DIAL, 1/2 NPT	SSF
11	4	70712	2781-16-4412-25	HOSE, 1" W/NPT MALE ENDS x 25-FT SECTION	NOTE 1
12	1		DWG 7022716-19	DESMI ROTAN PUMP	
13	2	01276	2096-16-16-259	COUPLING, 1"	SSF, NOTE 1
14	2	01276	2083-16-16-259	HEX NIPPLE, 1"	SSF, NOTE 1
15	1	70712	71PNC-16	SNAP TITE PLUG	NOTE 1
16	1	70712	71PCC-16	SNAP TITE DUST CAP	NOTE 1
17	9	01276	5657-16	DUST CAPS	NOTE 1
18	9	01276	5659-16	DUST PLUG	NOTE 1
19	1	53711	DWG 177013	VOPS CONTROL VALVE STAND	
20	1	70712	WIKA 233.53 4213553-B34	GAGE, 5000 PSI, 4" DIAL	SSF
21	1	70712	HEDLAND H761S050	FLOW METER, 0 - 50 GPM	
22	3	70712	SWAGELOK SS-16-HLN-4	NIPPLE, HEX LONG	SSF
23	6	01276	2066-16-16	FEMALE PIPE TO SAE "O"-RING BOSS	SSF
24	3	01276	2089-16-16	90° ELBOW, MALE/FEMALE	SSF
25	3	01276	2085-16-16	90° ELBOW, MALE/FEMALE	SSF

UNLESS OTHERWISE SPECIFIED:
ALL DIMENSIONS ARE IN INCHES.
TOLERANCES: DIM. OE-S-18
ANG. OE-S-19

GPC - A JOINT VENTURE
WILLIAMSBURG, VA
757-887-7402

CONSULTANTS

DEPARTMENT OF THE NAVY
NAVAL SEA SYSTEMS COMMAND
WASHINGTON, D.C. 20362

SITE LOCATION:
WAREHOUSE # 12
CHEATHAM ANNEX
WILLIAMSBURG, VA.
23185

NAVSEA DWG NO:
7022718

U. S. COAST GUARD
OCEAN ENGINEERING DIV.
WASHINGTON, DC

USCG COMDT G-SEC-2
2100 2ND STREET SW
WASHINGTON, DC 20593-0001

ISSUE

MARK	DATE	DESCRIPTION

REFER TO NAVSEA DWG FOR REVISIONS

A/E PROJECT NO: N00024-96-D-4107
CAD FILE NAME: Z177012D01.DWG
DESIGNED BY: C. MOFFATT 1/27/00
DRAWN BY: R. NAZARETH 1/27/00
EDITED BY:
CHECKED BY: C. MOFFATT 1/27/00

SCALE: PLOT SCALE 1=1

SHEET TITLE

VISCOUS OIL PUMPING SYSTEM
G-SEC-2C
WASHINGTON DC
HYDRAULIC POWER SUPPLY SYST.

ASSEMBLY

REVIEWED BY: PCN	REVIEWED BY: BS	REVIEWED BY: RML
PROJECT ENG.	BRANCH CHIEF	G-SEC-2

W.P. LAYNE, CAPT, USCG — CHIEF, CIVIL ENG
03/15/01 — DATE

PROJECT NUMBER
DRAWING NUMBER: 177012
DISCIPLINE/SHT NO: Z17712D01
SHEET 1 OF 1