PARTS LIST					
FIND NO.	QTY REQD	CAGE CODE	PART OR IDENTIFYING NO.	NOMENCLATURE OR DESCRIPTION	MATERIAL OR NOTE
1	AR	63711	-1	25' DISCHARGE HOSE	
2	AR	63711	-2	50' DISCHARGE HOSE	
3	AR	31043	TIRAN 242	FUEL HOSE (150 PSI)	NITRILE RUBBER
4	1	32142	A-CPL/HOS-6FS-SB1	COUPLING, 6" HOSE, FEMALE SPLIT	AL
5	1	32142	R-RNG/O-6-438	"O" SEAL, 6"	RUBBER
6	1	32142	A-CPL/HOS-6MS-SB1	COUPLING, 6" HOSE, MALE SPLIT	AL
7	1	32142	A-CLMP-6S	CLAMP, SPLIT, HOSE COUPLING	AL

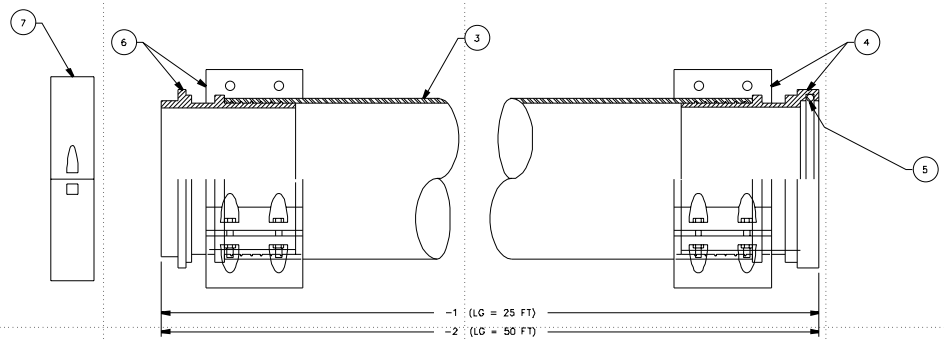

UNLESS OTHERWISE SPECIFIED:
ALL DIMENSIONS ARE IN INCHES.
TOLERANCES: DIM. 1/2
ANG. OE-S-19

GPC - A JOINT VENTURE
WILLIAMSBURG, VA
757-887-7402

CONSULTANTS

DEPARTMENT OF THE NAVY
NAVAL SEA SYSTEMS COMMAND
WASHINGTON, D.C. 20362

SITE LOCATION:
WAREHOUSE # 12
CHEATHAM ANNEX
WILLIAMSBURG, VA.
23185

NAVSEA DWG NO:
7022714

U. S. COAST GUARD
OCEAN ENGINEERING DIV.
WASHINGTON, DC

USCG. COMDT G-SEC-2
2100 2ND STREET SW
WASHINGTON, DC 20593-0001

ISSUE

MARK	DATE	DESCRIPTION

REFER TO NAVSEA DWG FOR REVISIONS

A/E PROJECT NO: N00024-96-D-4107
CAD FILE NAME: Z177008D01.DWG
DESIGNED BY: C. MOFFATT 1/28/00
DRAWN BY: R. NAZARETH 1/28/00
EDITED BY:
CHECKED BY: C. MOFFATT 1/28/00

SCALE: PLOT SCALE 1=1

SHEET TITLE

VISCOUS OIL PUMPING SYSTEM
G-SEC-2C
WASHINGTON DC
PROD. LAY FLAT DISCHARGE HOSE

ASSEMBLY

REVIEWED BY: PCN PROJECT ENG.	REVIEWED BY: BS BRANCH CHIEF	REVIEWED BY: RML G-SEC-2
W.P. LAYNE, CAPT, USCG CHIEF, CIVIL ENG		03/15/01 DATE

PROJECT NUMBER	DRAWING NUMBER
	177008
DISCIPLINE/SHT NO Z17708D01	SHEET 1 OF 1