PARTS LIST					
FIND NO.	QTY REQD	CAGE CODE	PART OR IDENTIFYING NO.	NOMENCLATURE OR DESCRIPTION	MATERIAL OR NOTE
1	6 LF		TITAN SW333	HOSE, SEMI-RIGID, 6", SVC/PITCH	VARIOUS
2	1	32142	A-CPL/HOS-6FS-S81	COUPLING, 6" HOSE, FEMALE SPLIT	AL
3	1	32142	R-RNG/O-8-438	"O" SEAL, 8"	RUBBER
4	1	32142	A-CPL/HOS-6MS-S81	COUPLING, 6" HOSE, MALE SPLIT	AL
5	1	32142	A-CLMP-8S	CLAMP, SPLIT, HOSE COUPLING	AL

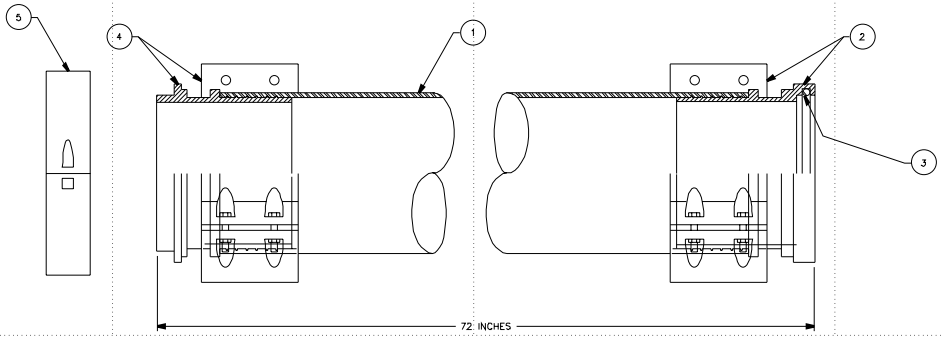

UNLESS OTHERWISE SPECIFIED:
ALL DIMENSIONS ARE IN INCHES.
TOLERANCES: DIM. 1/2
ANG. ±5°

GPC – A JOINT VENTURE
WILLIAMSBURG, VA
757-887-7402

CONSULTANTS

DEPARTMENT OF THE NAVY
NAVAL SEA SYSTEMS COMMAND
WASHINGTON, D.C. 20362

SITE LOCATION,
WAREHOUSE # 12
CHEATHAM ANNEX
WILLIAMSBURG, VA.
23185

NAVSEA DWG NO:
7022713

U. S. COAST GUARD
OCEAN ENGINEERING DIV.
WASHINGTON, DC

USCG. COMDT G-SEC-2
2100 2ND STREET SW
WASHINGTON, DC 20593-0001

ISSUE

MARK	DATE	DESCRIPTION

REFER TO NAVSEA DWG FOR REVISIONS

A/E PROJECT NO: N00024-96-D-4107
CAD FILE NAME: Z177007D01.DWG
DESIGNED BY: C. MOFFATT 1/28/00
DRAWN BY: R. NAZARETH 1/28/00
EDITED BY:
CHECKED BY: C. MOFFATT 1/28/00

SCALE: PLOT SCALE 1=1

SHEET TITLE

VISCOUS OIL PUMPING SYSTEM
G-SEC-2C
WASHINGTON DC
SEMI-RIGID HOSE SECTION

SECTION / ASSEMBLY

REVIEWED BY:	REVIEWED BY:	REVIEWED BY:
PCN	BS	RML
PROJECT ENG.	BRANCH CHIEF	G-SEC-2

W.P. LAYNE, CAPT, USCG — CHIEF, CIVIL ENG
03/15/01 — DATE

PROJECT NUMBER	DRAWING NUMBER
	177007
DISCIPLINE/SHT NO	
Z17707D01	SHEET 1 OF 1