NOTES:

1. WELDING TO BE IN ACCORDANCE WITH AWS D1.2 .

PARTS LIST					
FIND NO.	QTY REQD	CAGE CODE	PART OR IDENTIFYING NO	NOMENCLATURE OR DESCRIPTION	MATERIAL OR NOTE
1	5 LF		COMMERCIAL	PIPE, 6" SCH 40	AL 6061-T6
2			COMMERCIAL	ROUND BAR, #1-1/2 (GAUGE PORT BOSS)	6061-T6
3	2		COMMERCIAL	FLANGE, 6" ANSI 150#	AL
4	2		COMMERCIAL	BUSHING, REDUCING, 1/2 x 1/4 NPT	ZINC PLTD ST
5	2		COMMERCIAL	PLUG, 1/4 NPT	ZINC PLTD ST
6	16		COMMERCIAL	BOLT, HEX HD, 3/4-10 UNC x 3 1/2 LG	SST
7	32		COMMERCIAL	WASHER, FLAT, 3/4 (NOM)	SST
8	16		COMMERCIAL	WASHER, SPLIT-LOCK, 3/4 (NOM)	SST
9	16		COMMERCIAL	NUT, HEX, 3/4 (NOM)	SST
10	2		COMMERCIAL	RING GASKET, 6"-150#, 1/16 THK	BUNA-N
11			COMMERCIAL	PIPE, #1-1/2	AL 6061-T6
12	2		COMMERCIAL	PIPE CAP, 1-1/2	AL
13			COMMERCIAL	PLATE, 3/8 THK	5086-H111

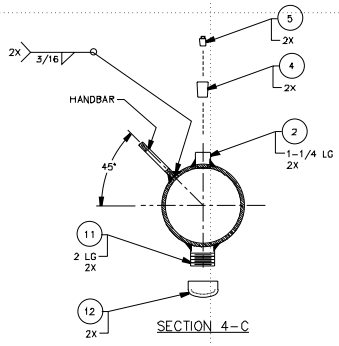

SECTION 4-C

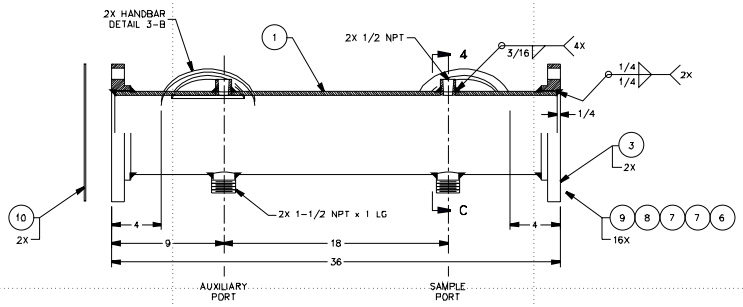

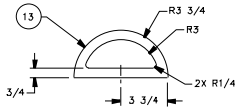

DETAIL 4-B
HANDBAR
QTY REQD: 2
SCALE: 1/2

UNLESS OTHERWISE SPECIFIED:
ALL DIMENSIONS ARE IN INCHES.
TOLERANCES: DIM. 1/8
ANG. ±5°

GPC - A JOINT VENTURE
WILLIAMSBURG, VA
757-887-7402

CONSULTANTS

DEPARTMENT OF THE NAVY
NAVAL SEA SYSTEMS COMMAND
WASHINGTON, D.C. 20362

SITE LOCATION:
WAREHOUSE # 12
CHEATHAM ANNEX
WILLIAMSBURG, VA
23185

NAVSEA DWG NO:
7022711

U. S. COAST GUARD
OCEAN ENGINEERING DIV.
WASHINGTON, DC

USCG. COMDT G-SEC-2
2100 2ND STREET SW
WASHINGTON, DC 20593-0001

ISSUE		
MARK	DATE	DESCRIPTION

REFER TO NAVSEA DWG FOR REVISIONS

A/E PROJECT NO: N00024-96-D-4107
CAD FILE NAME: Z177005D01.DWG
DESIGNED BY: C. MOFFATT 1/28/00
DRAWN BY: R. NAZARETH 1/28/00
EDITED BY:
CHECKED BY: C. MOFFATT 1/28/00

SCALE: PLOT SCALE 1=1

SHEET TITLE

VISCOUS OIL PUMPING SYSTEM
G-SEC
WASHINGTON DC
PRESSURE MONITORING PIPE

ASSEMBLY/SECTION/DETAIL

REVIEWED BY:	REVIEWED BY:	REVIEWED BY:
PCN	BS	RML
PROJECT ENG.	BRANCH CHIEF	G-SEC-2

W.P. LAYNE, CAPT, USCG — CHIEF, CIVIL ENG
03/15/01 — DATE

PROJECT NUMBER	DRAWING NUMBER
	177005
DISCIPLINE/SHT NO	
Z17705D01	SHEET 1 OF 1