NOTES:

1. WELDING TO BE IN ACCORDANCE WITH AWS D1.2.
2. MODIFY COUPLINGS BY REDUCING LENGTH TO THE FIRST FLANGE AND ADDING A 3/16 x 45° BEVEL TO THE FLANGE.

PARTS LIST

FIND NO.	QTY REQD	CAGE CODE	PART OR IDENTIFYING NO.	NOMENCLATURE OR DESCRIPTION	MATERIAL OR NOTE
1	1		COMMERCIAL	90° ELBOW, LONG RADIUS, SCH 40	AL 6061-T6
2	1	32142	A-CPL-HOS-BMS-581	COUPLING NIPPLE, MALE	AL (NOTE 2)
3	1	32142	A-CPL-HOS-BFS-581	COUPLING NIPPLE, FEMALE	AL (NOTE 2)
4	1	32142	R-RNG/O-8-438	"O" RING SEAL, 8"	RUBBER
5	1	32142	A-CLMP-8S	CLAMP, SPLIT, HOSE COUPLING	AL

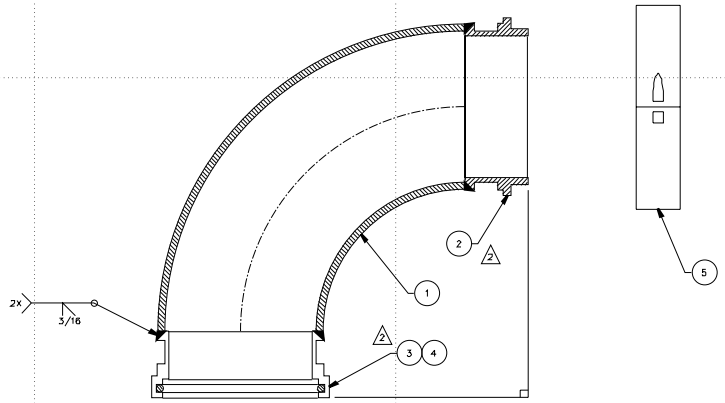

UNLESS OTHERWISE SPECIFIED:
ALL DIMENSIONS ARE IN INCHES.
TOLERANCES: DIM. 1/16
ANG. ±.5°

GPC – A JOINT VENTURE
WILLIAMSBURG, VA
757-887-7402

CONSULTANTS

DEPARTMENT OF THE NAVY
NAVAL SEA SYSTEMS COMMAND
WASHINGTON, D.C. 20362

SITE LOCATION:
WAREHOUSE # 12
CHEATHAM ANNEX
WILLIAMSBURG, VA.
23185

NAVSEA DWG NO:
7022709

U. S. COAST GUARD
OCEAN ENGINEERING DIV.
WASHINGTON, DC

USCG. COMDT G-SEC-2
2100 2ND STREET SW
WASHINGTON, DC 20593-0001

ISSUE

MARK	DATE	DESCRIPTION

REFER TO NAVSEA DWG FOR REVISIONS

A/E PROJECT NO: N00024-96-D-4107
CAD FILE NAME: Z177003D01.DWG
DESIGNED BY: C. MOFFATT 1/28/00
DRAWN BY: R. NAZARETH 1/28/00
EDITED BY:
CHECKED BY: C. MOFFATT 1/28/00

SCALE: PLOT SCALE 1=1

SHEET TITLE

VISCOUS OIL PUMPING SYSTEM
G-SEC-2C
WASHINGTON DC
HYDRASEARCH LONG RAD. ELBOW

ASSEMBLY

REVIEWED BY:	REVIEWED BY:	REVIEWED BY:
PCN	BS	RML
PROJECT ENG.	BRANCH CHIEF	G-SEC-2

W.P. LAYNE, CAPT, USCG — CHIEF, CIVIL ENG
03/15/01 — DATE

PROJECT NUMBER	DRAWING NUMBER
	177003
DISCIPLINE/SHT NO	
Z17703D01	SHEET 1 OF 1