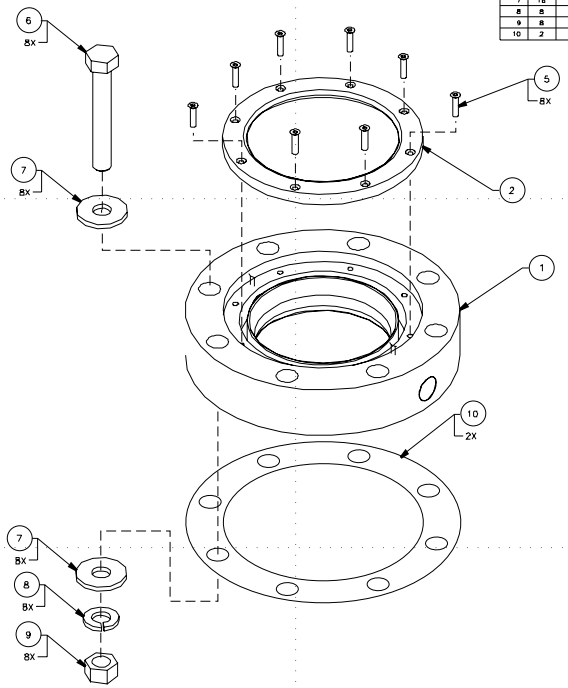

PARTS LIST

FIND NO.	QTY REQD	CAGE CODE	PART OR IDENTIFYING NO.	NOMENCLATURE OR DESCRIPTION	MATERIAL OR NOTE
1	1	53711	-1	INJECTION FLANGE	
2	1	53711	-2	DEFLECTION RING	
3				PLATE, 2.5 THK	AL 6061-T6
4				PLATE, .5 THK	AL 6061-T6
5	8		COMMERCIAL	SCREW #10-24 x 1 LG. PHILLIPS MACHINE	SST
6	8		COMMERCIAL	BOLT, HEX HD. 3/4-10 UNC x 6 LG	SST
7	16		COMMERCIAL	WASHER FLAT 3/4 (NOM)	SST
8	8		COMMERCIAL	WASHER SPLIT-LOCK 3/4 (NOM)	SST
9	8		COMMERCIAL	NUT, HEX, 3/4-10 UNC	SST
10	2		COMMERCIAL	RING GASKET, 8"-150#, 1/16 THK	BUNA-N

UNLESS OTHERWISE SPECIFIED
ALL DIMENSIONS ARE IN INCHES.
TOLERANCES: DIM OE-S-18
ANG. OE-S-19

GPC – A JOINT VENTRURE
WILLIAMSBURG, VA
757-887-7402

CONSULTANTS

DEPARTMENT OF THE NAVY
NAVAL SEA SYSTEMS COMMAND
WASHINGTON, D.C. 20362

SITE LOCATION
WAREHOUSE # 12
CHEATHAM ANNEX
WILLIAMSBURG, VA.
23185

NAVSEA DWG NO:
7022707

U. S. COAST GUARD
OCEAN ENGINEERING DIV.
WASHINGTON, DC

USCG. COMDT G-SEC-2
2100 2ND STREET SW
WASHINGTON, DC 20593-0001

ISSUE

MARK	DATE	DESCRIPTION

REFER TO NAVSEA DWG FOR REVISIONS

A/E PROJECT NO: N00024-96-D-4107
CAD FILE NAME: Z177001D01.DWG
DESIGNED BY: C. MOFFATT 1/28/00
DRAWN BY: R. NAZARETH 1/28/00
EDITED BY:
CHECKED BY: C. MOFFATT 1/28/00

SCALE: PLOT SCALE: 1=1

SHEET TITLE

VISCOUS OIL PUMPING SYSTEM
G-SEC-2C
WASHINGTON DC
H2O INJECTION ANNULUS FLANGE

ASSEMBLY

REVIEWED BY: PCN	REVIEWED BY: BS	REVIEWED BY: RNL
PROJECT ENG	BRANCH CHIEF	G-SEC-2

W P. LAYNE, CAPT — CHIEF, CIVIL ENG — 3/15/01 DATE

PROJECT NUMBER	DRAWING NUMBER
PROJECT #	177001
DISCIPLINE/SHT NO	
Z177001D01	SHEET 1 OF 3