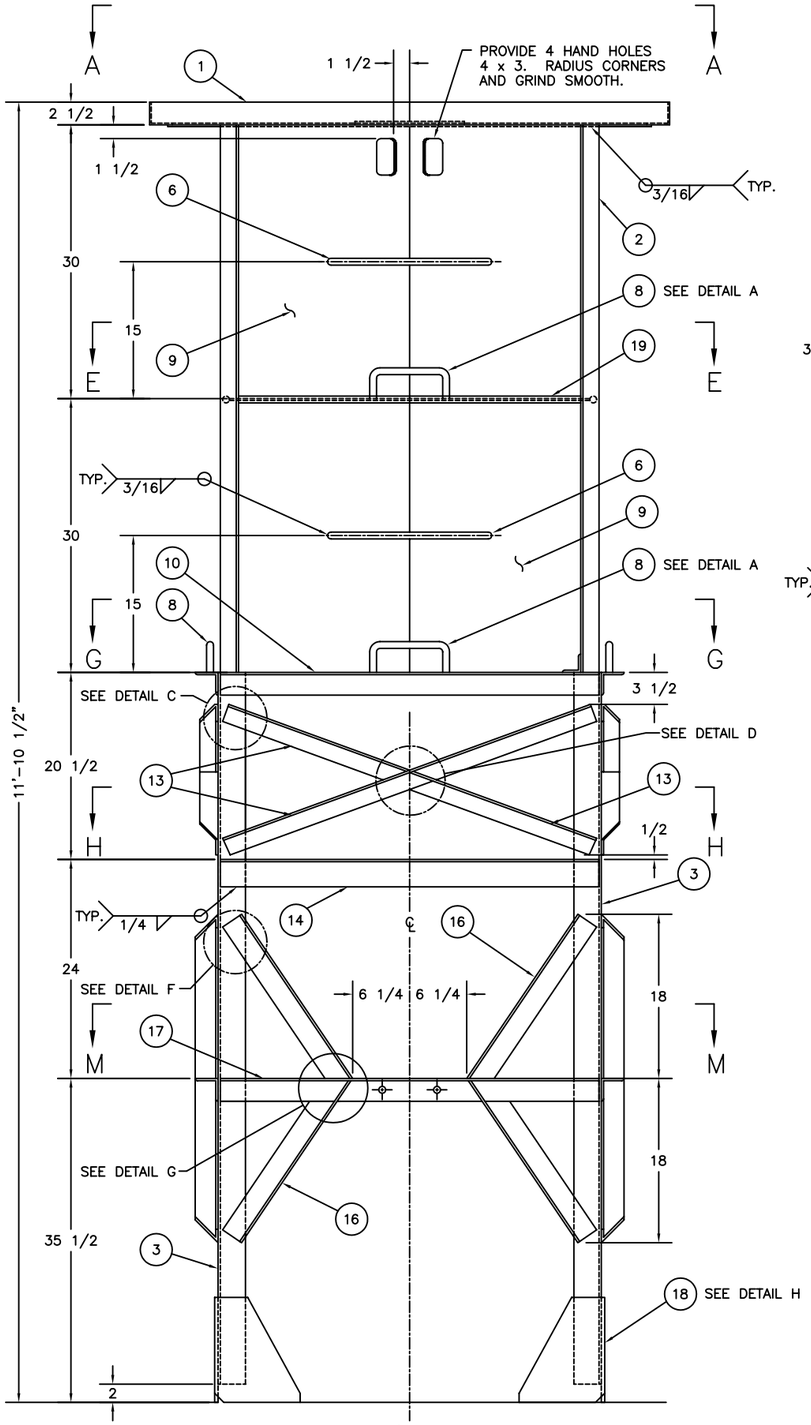

8x26 LR/LWR TOWER

SCALE: 1-1/2"=1'-0"

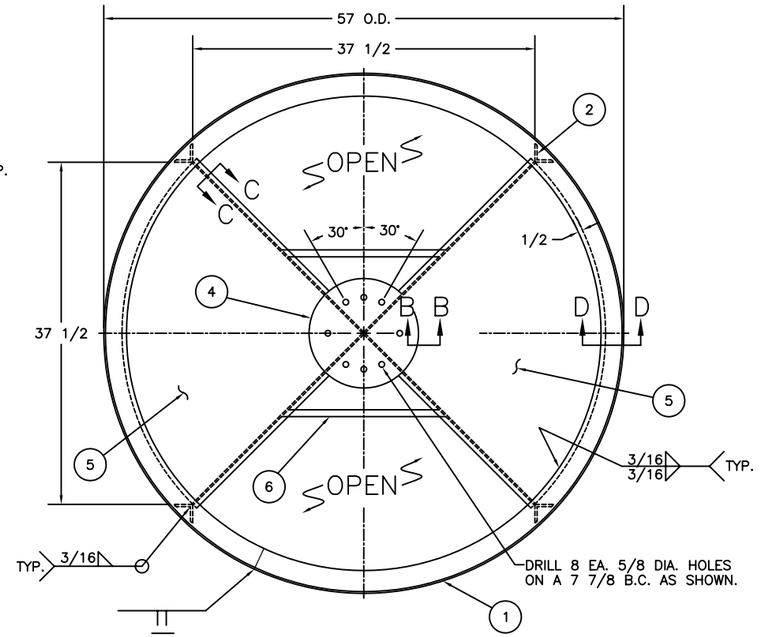

SECTION A-A

SCALE: 1-1/2"=1'-0"

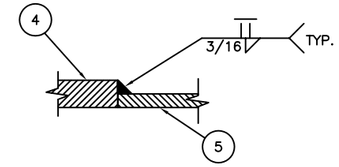

SECTION B-B

SCALE: FULL

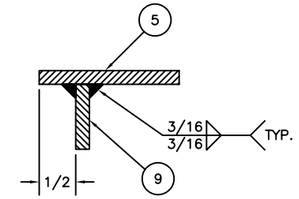

SECTION C-C

SCALE: FULL

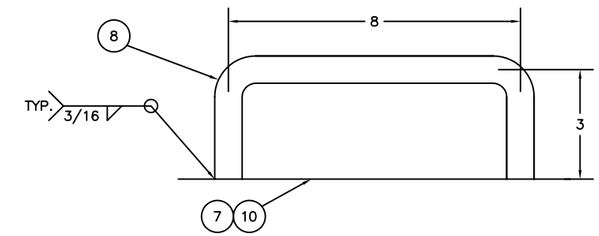

DETAIL A

SCALE: HALF

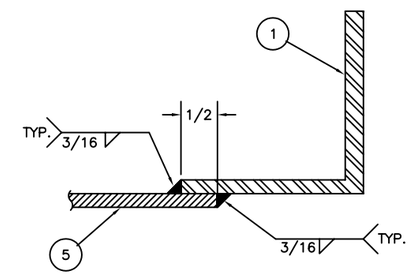

SECTION D-D

SCALE: FULL

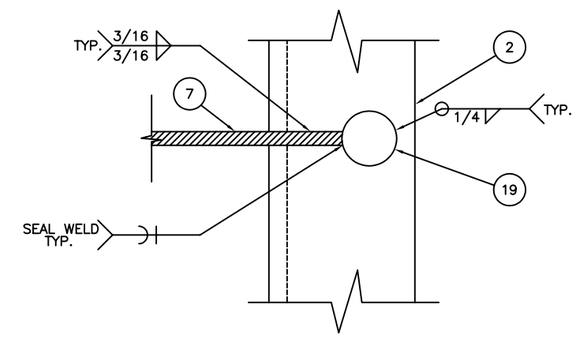

SECTION F-F

SCALE: FULL

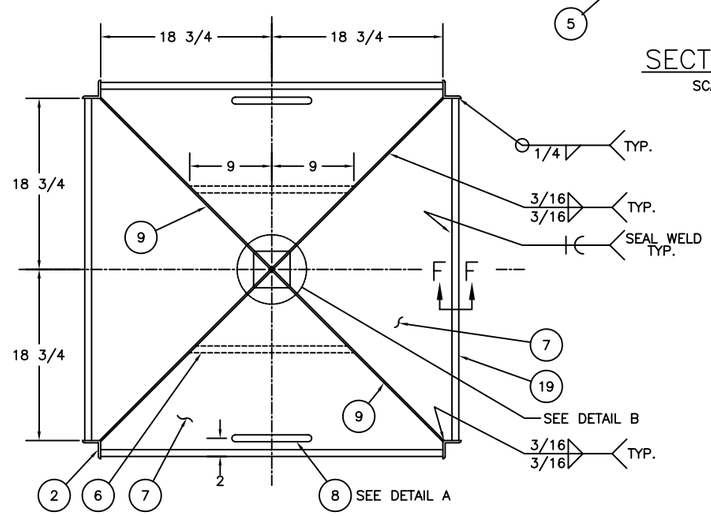

SECTION E-E

SCALE: 1-1/2"=1'-0"

REV.	DATE	APPR.	DESCRIPTION	BY

DESIGNED: S.M.
DRAWN: S.M.
TRACED:
CHECKED:
REVIEWED BY: Sean McEvoy, PROJECT ENGINEER
REVIEWED BY: S. D. Walker, G-SEC-2B
REVIEWED BY: L. E. Jaeger, G-SEC-2

U.S. COAST GUARD — HEADQUARTERS
CIVIL ENGINEERING

8x26 LR/LWR BUOY TOWER

APPROVED: J. A. Rauch, CHIEF, OFFICE OF CIVIL ENGINEERING
DATE: 8/13/96

UNLESS OTHERWISE SPECIFIED:
ALL DIMENSIONS ARE IN INCHES.
TOLERANCES: DIM. ±1/8
ANG. ±30'

DRAWING NUMBER: 121174
REV.
SCALE: AS NOTED
SHEET 1 OF 3

PLOTTING SCALE: 1-1/2"=1'-0"

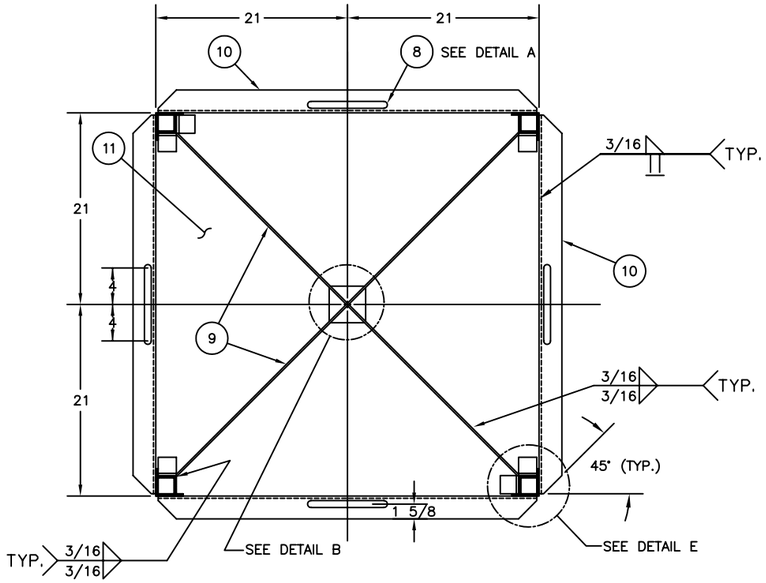

SECTION G–G

SCALE: 1–1/2"=1'–0"

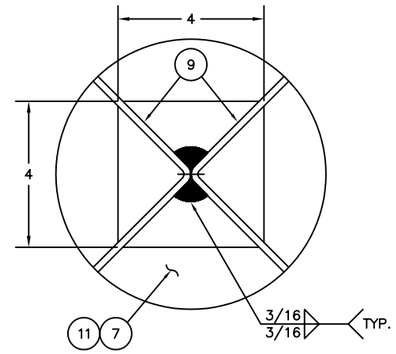

DETAIL B

SCALE: FULL

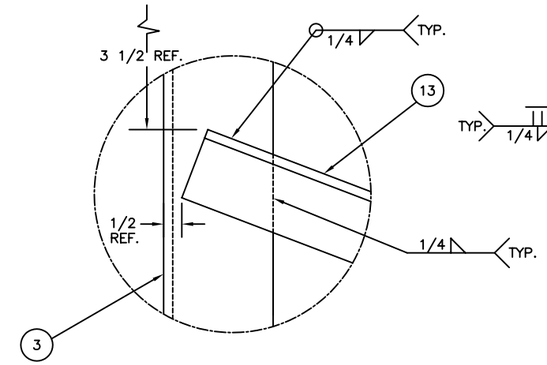

DETAIL C

SCALE: HALF

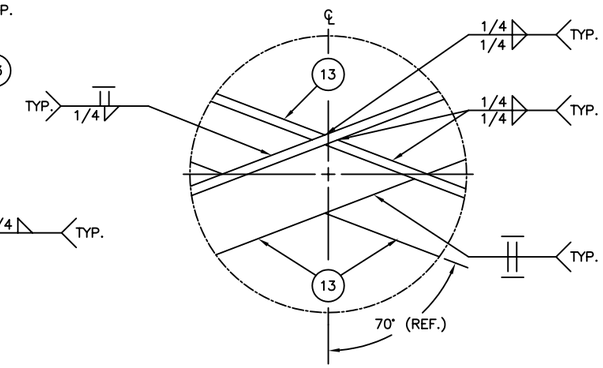

DETAIL D

SCALE: HALF

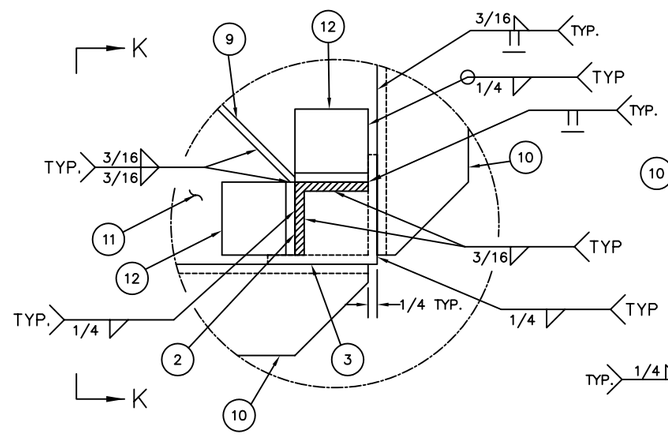

DETAIL E

SCALE: HALF

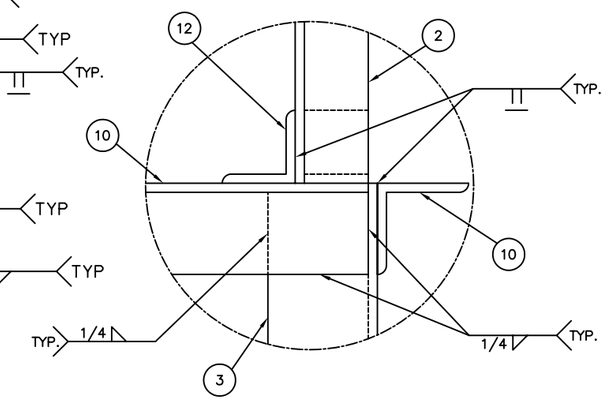

SECTION K–K

SCALE: HALF

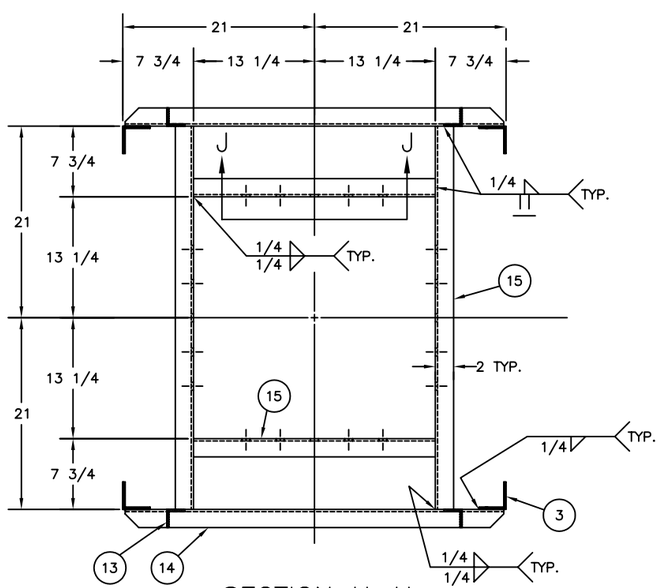

SECTION H–H

SCALE: 1–1/2"=1'–0"
(SEE NOTE 2)

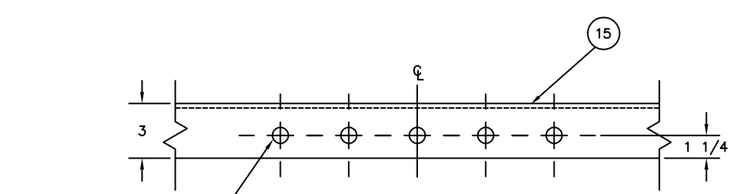

DRILL 5 HOLES–7/8 DIA.
SPACED AT 3 3/4 APART (TYP.)

SECTION J–J

SCALE: 3"=1'–0"

REV.	DATE	APPR.	DESCRIPTION	BY

DESIGNED: S.M.
DRAWN: S.M.
TRACED:
CHECKED:
REVIEWED BY: Sean McEvoy
PROJECT ENGINEER
REVIEWED BY: S. D. Walker
G-SEC-2B
REVIEWED BY: L. E. Jaeger
G-SEC-2

U.S. COAST GUARD HEADQUARTERS
CIVIL ENGINEERING

8x26 LR/LWR
BUOY TOWER

APPROVED: J. A. Rauch
CHIEF, OFFICE OF CIVIL ENGINEERING

DATE 8/13/96

UNLESS OTHERWISE SPECIFIED:
ALL DIMENSIONS ARE IN INCHES.
TOLERANCES: DIM. ±1/8
ANG. ±30'

DRAWING NUMBER 121174 REV.

SCALE: AS NOTED SHEET 2 OF 3

PLOTTING SCALE: 1–1/2"=1'–0"

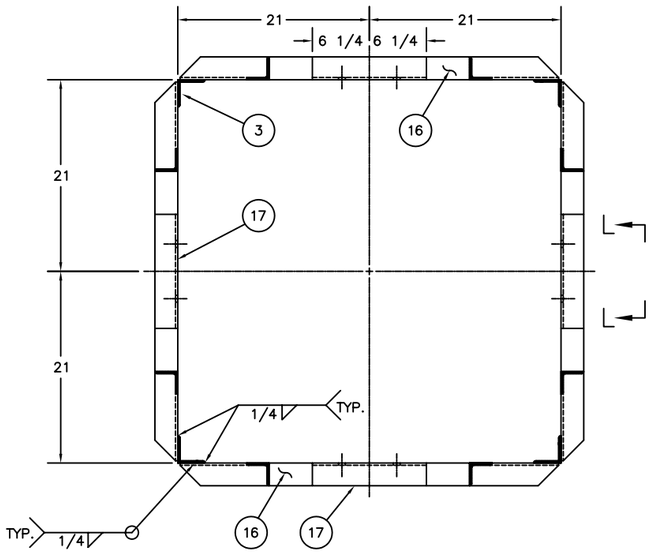

SECTION M–M

SCALE: 1–1/2"=1'–0"

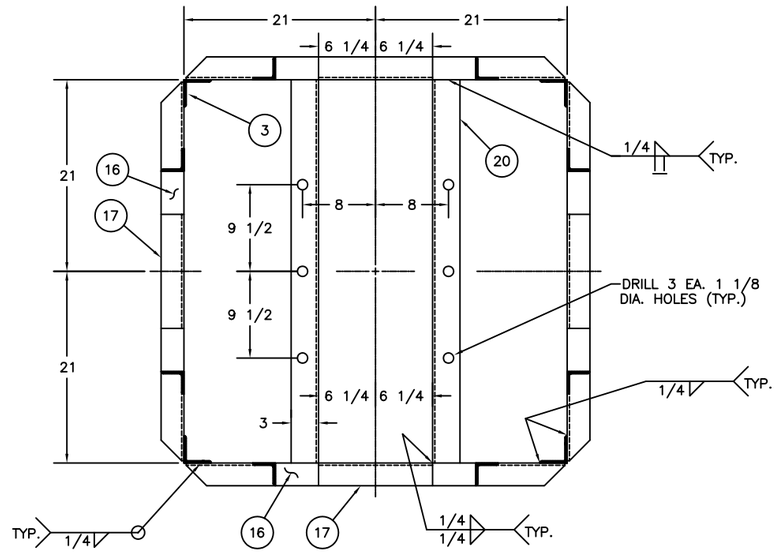

SECTION M–M

SCALE: 1–1/2"=1'–0"
FOR "LWR" ONLY. SEE NOTE 2.

BILL OF MATERIALS

ITEM NO.	NO. REQ.	DESCRIPTION	MATL.	REMARKS
1	1	LANTERN RING	STEEL	2 1/2 x 2 1/2 x 3/16 L
2	4	RADAR REFLECTOR POSTS	STEEL	2 x 2 x 1/4 L
3	4	TOWER LEGS	STEEL	3 x 3 x 1/4 L
4	1	LANTERN BASE PLATE	STEEL	12 DIA. x 3/8 THK.
5	2	LANTERN RING REFLECTORS	STEEL	3/16 THK.
6	4	STEPS	STEEL	3/4 DIA. ROD
7	4	UPPER HORIZONTAL REFLECT.	STEEL	3/16 THK.
8	6	HAND GRABS	STEEL	3/4 DIA. ROD
9	2	VERTICAL REFLECTORS	STEEL	3/16 THK.
10	4	UPPER TOWER STRUTS	STEEL	2 1/2 x 2 1/2 x 1/4 L
11	1	LOWER HORIZONTAL REFLECT.	STEEL	3/16 THK.
12	6	ANGLE CLIPS	STEEL	2 x 2 x 1/4 L
13	12	CROSS BRACES	STEEL	2 x 2 x 1/4 L
14	2	MIDDLE TOWER STRUTS	STEEL	3 x 2 x 1/4 L
15	4	TAPPER SUPPORTS	STEEL	3 x 2 x 1/4 L
16	16	DIAGONAL BRACES	STEEL	2 1/2 x 2 1/2 x 1/4 L
17	4	LOWER TOWER STRUTS	STEEL	2 1/2 x 2 1/2 x 1/4 L
18	4	TOWER FEET	STEEL	3/8 THK.
19	4	UPPER REFLECTOR BAR	STEEL	3/4 DIA. ROD
20	2	WHISTLE VALVE SUPPORT	STEEL	3 x 2 1/2 x 1/4 L

NOTES:

1. SEE LATEST REVISION OF U.S.C.G. CIVIL ENGINEERING SPECIFICATION No. 464 FOR FABRICATION REQUIREMENTS.
2. FOR THE "LWR" TOWER ONLY, INSTALL ITEM 20 AND REMOVE ITEM 15.

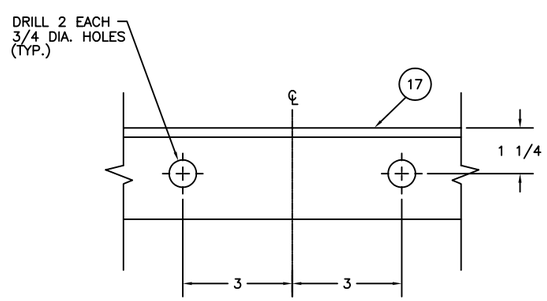

SECTION L–L

SCALE: HALF

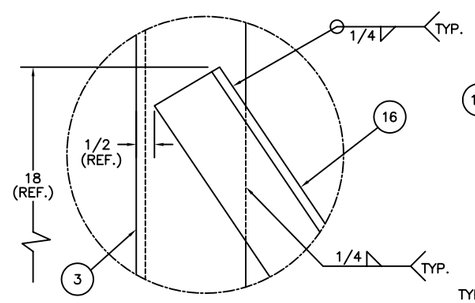

DETAIL F

SCALE: HALF

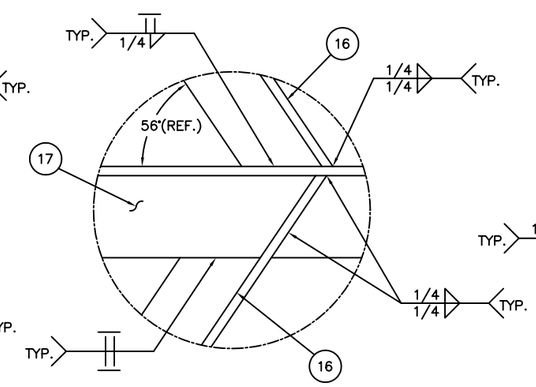

DETAIL G

SCALE: HALF

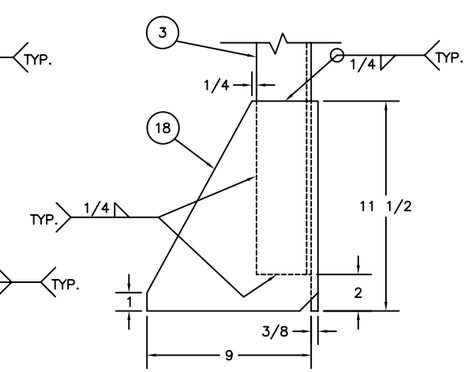

DETAIL H

SCALE: HALF

REV.	DATE	APPR.	DESCRIPTION	BY

DESIGNED: S.M.
DRAWN: S.M.
TRACED:
CHECKED:
REVIEWED BY: Sean McEvoy, PROJECT ENGINEER
REVIEWED BY: S. D. Walker, G-SEC-2B
REVIEWED BY: L. E. Jaeger, G-SEC-2

U.S. COAST GUARD HEADQUARTERS
CIVIL ENGINEERING

8x26 LR/LWR
BUOY TOWER

APPROVED: J. A. Rauch, CHIEF, OFFICE OF CIVIL ENGINEERING
DATE: 8/13/96

UNLESS OTHERWISE SPECIFIED:
ALL DIMENSIONS ARE IN INCHES.
TOLERANCES: DIM. ±1/8
ANG. ±30'

DRAWING NUMBER: 121174
REV.
SCALE: AS NOTED
SHEET 3 OF 3

PLOTTING SCALE: 1–1/2"=1'–0"