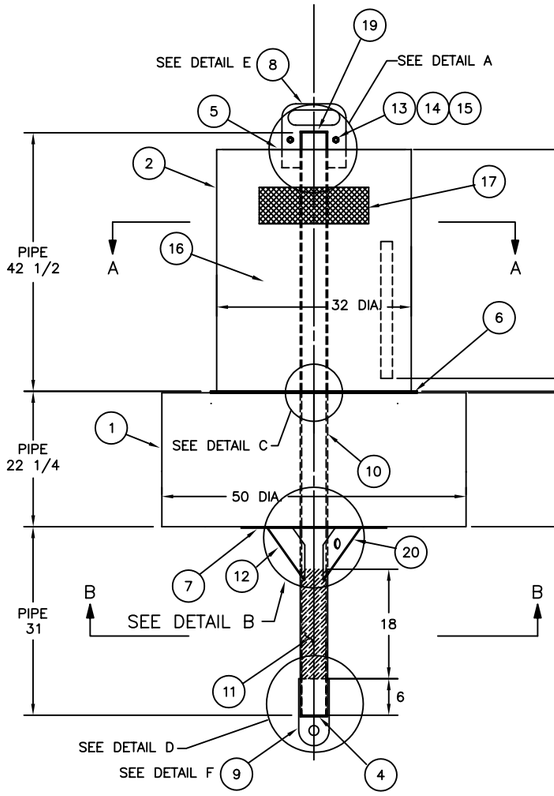

3CFR

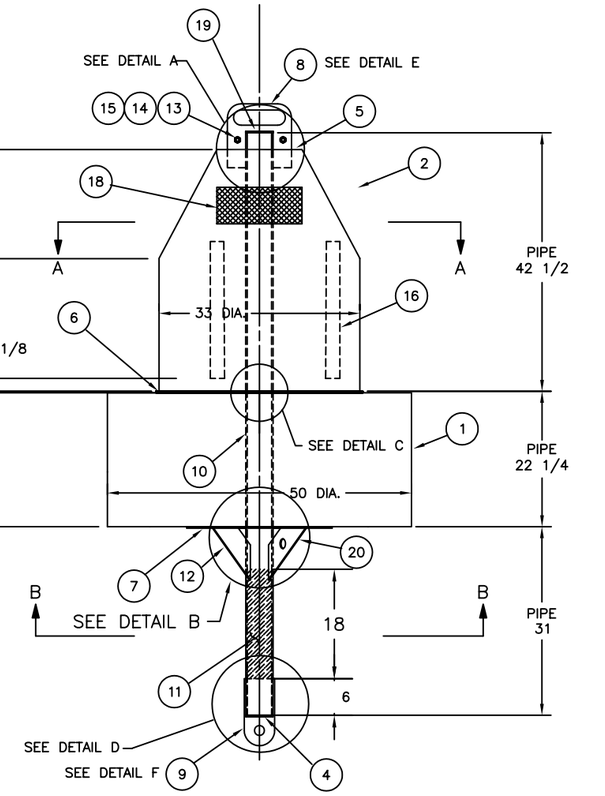

3NFR

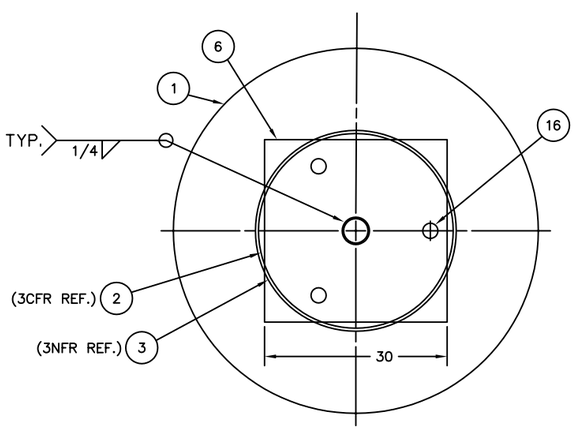

SECTION A–A

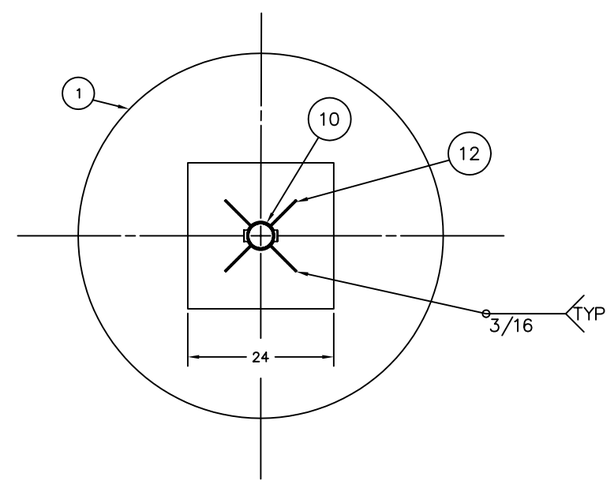

SECTION B–B

REV.	DATE	APPR.	DESCRIPTION	BY
C	1–5 –99	S.W.	REORGANIZED DWG. MODIFIED QTY OF ITEMS 12 AND 16. ADDED ITEM 20. REORGANIZED THE DRAWING.	S.M.
B	11–24 –97	S.W.	MODIFIED SLOT DIMENSION FOR ITEM 5.	S.M.
A	1–22 –97	S.W.	REORGANIZED DWG. MODIFIED ITEMS 4, 5, 7, 8, 10, 12, 13, 14, 15. ADDED NOTE 7. ADDED ITEM 19.	C.B.

DESIGNED: D.B
DRAWN: D.B.
TRACED:
CHECKED: S.M.
REVIEWED BY: D A Braganza, PROJECT ENGINEER
REVIEWED BY: Sean McEvoy, G-SEC-2B
REVIEWED BY: S. D. Walker, G-SEC-2

U.S. COAST GUARD HEADQUARTERS
CIVIL ENGINEERING

3CFR AND 3NFR UNLIGHTED FOAM BUOYS

APPROVED: L. E. Jaeger, CHIEF, OFFICE OF CIVIL ENGINEERING
DATE: 09-06-95

UNLESS OTHERWISE SPECIFIED:
ALL DIMENSIONS ARE IN INCHES.
TOLERANCES: DIM. ±1/8
ANG. ±1°

DRAWING NUMBER: 121167 REV. C
SCALE: AS NOTED SHEET 1 OF 3

PLOTTING SCALE: 3/4"=1'-0"

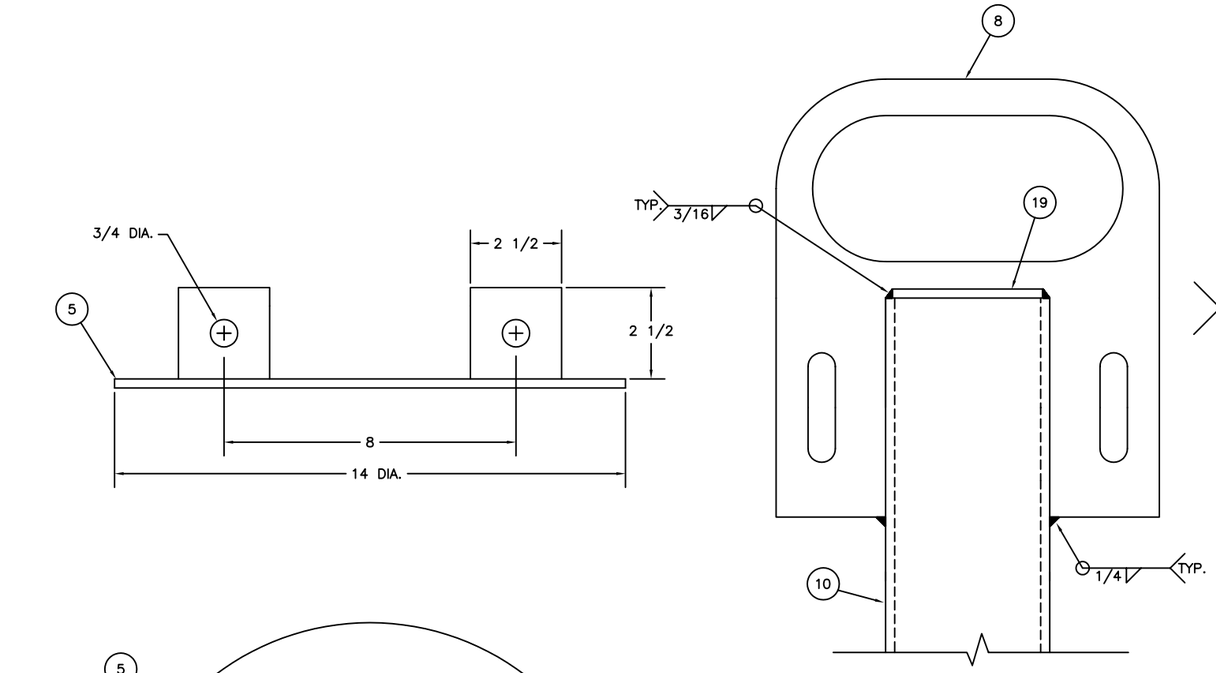

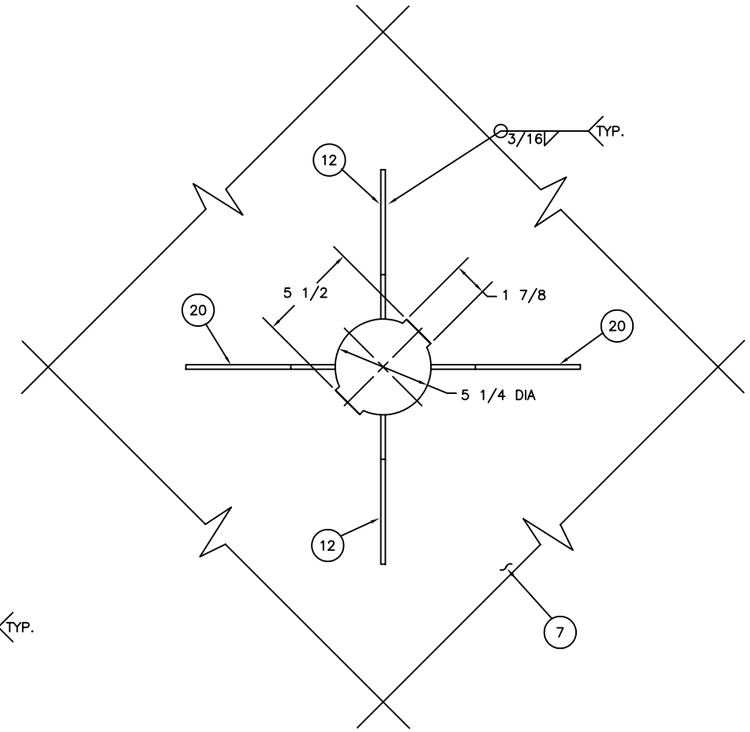

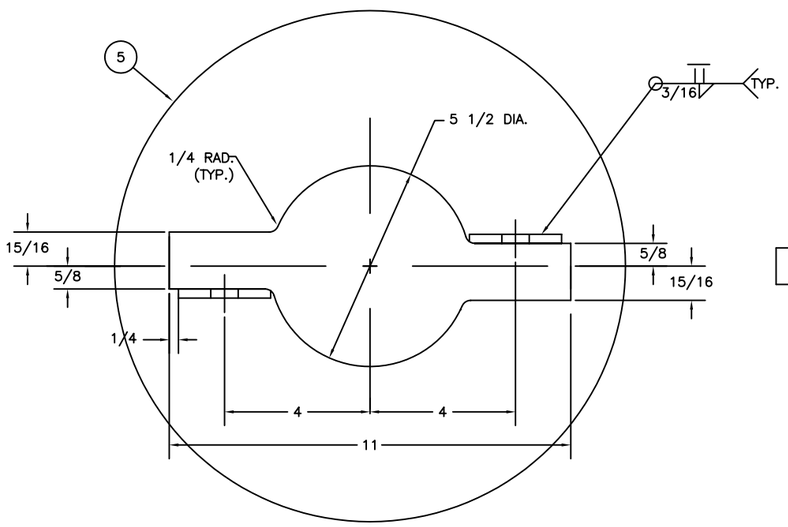

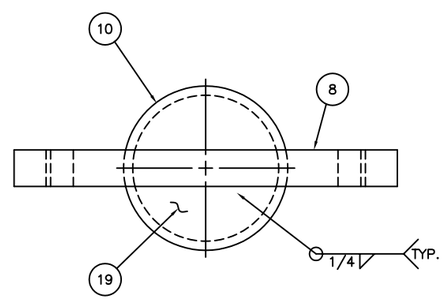

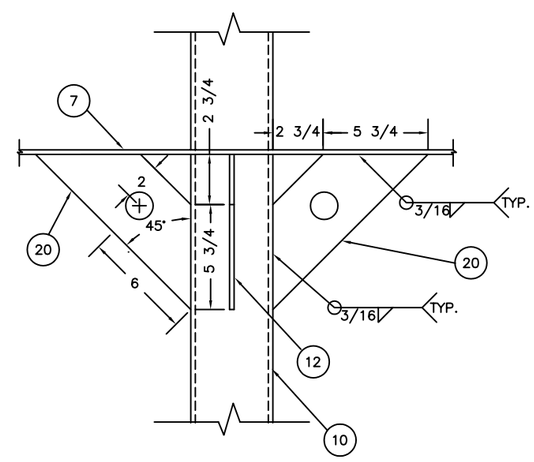

DETAIL A

SCALE: HALF

NOTE: ITEM 5 BOLTS INTO ITEM 8 USING ITEMS 13, 16, AND 20

DETAIL B

SCALE: 3"=1'-0"

(FOR CLARITY, THIS DETAIL HAS BEEN ROTATED 45° FROM THE VIEW ON PAGE 1)

REV.	DATE	APPR.	DESCRIPTION	BY
C	1-5-99	S.W.	MODIFIED QTY OF ITEMS 12 AND 16. ADDED ITEM 20. REORGANIZED NOTES.	S.M.
B	11-24-97	S.W.	MODIFIED SLOT DIMENSION FOR ITEM 5.	S.M.
A	1-22-97	S.W.	REORGANIZED DWG. MODIFIED ITEMS 4, 5, 7, 8, 10, 12, 13, 14, AND 15. ADDED NOTE 7. ADDED ITEM 19.	C.B.

DESIGNED: D.B.
DRAWN: D.B.
TRACED: S.M.
CHECKED: S.M.
REVIEWED BY: D. A. Braganza, PROJECT ENGINEER
REVIEWED BY: S. McEvoy, G-SEC-2B
REVIEWED BY: S. D. Walker, G-SEC-2

U.S. COAST GUARD HEADQUARTERS

CIVIL ENGINEERING

3CFR AND 3NFR UNLIGHTED FOAM BUOYS

APPROVED: L. E. Jaeger, CHIEF, OFFICE OF CIVIL ENGINEERING

DATE: 09-06-95

UNLESS OTHERWISE SPECIFIED:
ALL DIMENSIONS ARE IN INCHES.
TOLERANCES: DIM. ±1/8
ANG. ±1°

DRAWING NUMBER: 121167 REV. C

SCALE: AS NOTED SHEET 2 OF 3

PLOTTING SCALE: 6"=1'-0"

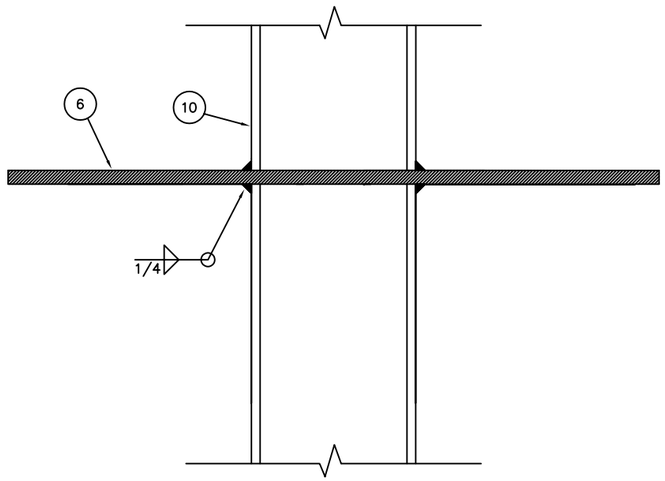

DETAIL C

SCALE: HALF
(CROSS SECTIONAL VIEW)

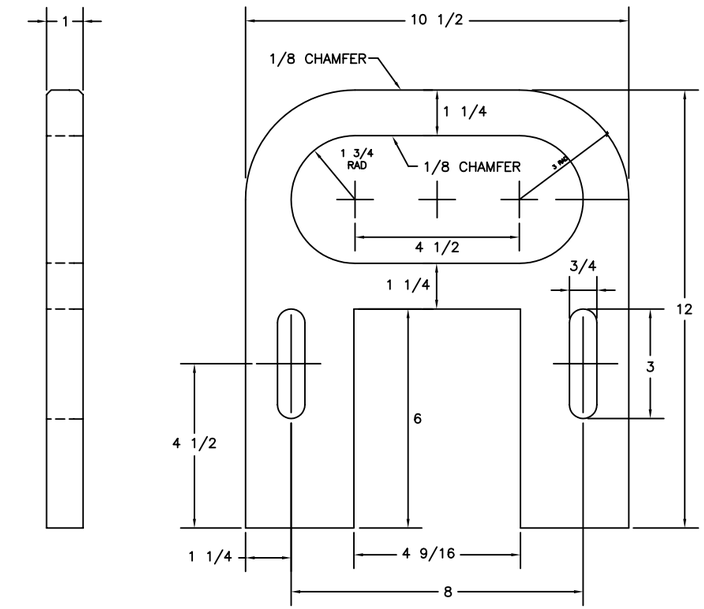

8 DETAIL E

SCALE: 3"=1'-0"

ITEM NO.	CFR NO. REQ.	NFR NO. REQ.	BILL OF MATERIALS DESCRIPTION	MATL.	REMARKS
1	1	1	BUOY BODY	FOAM	3 PCF SEE NOTE 1
2	1	–	BUOY DAYMARK (CFR)	FOAM	3 PCF SEE NOTES 1 & 2
3	–	1	BUOY DAYMARK (NFR)	FOAM	3 PCF SEE NOTES 1 & 2
4	2	2	BOTTOM TUBE SEAL PLATES	STEEL	1/4 THK
5	1	1	TOP PLATE	STEEL	14 O.D. x 5 1/2 I.D. x 1/4 THK
6	1	1	MIDDLE PLATE	STEEL	30 SQ. x 3/8 THK.
7	1	1	BOTTOM PLATE	STEEL	24 SQ. x 1/4 THK.
8	1	1	TOP LIFT EYE	STEEL	1 THK
9	1	1	MOORING EYE	STEEL	1 1/2 THK
10	1	1	CENTER PIPE	STEEL	4 SCH. 40 PIPE x 96 LG.
11	1	1	BALLAST	STEEL	4 O.D. x 18 LG. SOLID STEEL
12	4	4	BOTTOM SUPPORT GUSSETS	STEEL	1/4 THK
13	2	2	NYLOCK NUT	STAINLESS STEEL	5/8–11 UNC
14	4	4	WASHERS	STAINLESS STEEL	5/8 NOMINAL
15	2	2	ATTACHMENT BOLTS	STAINLESS STEEL	5/8–11UNCX2–1/2LG
16	3	3	RADAR REFLECTOR		MOBRI M4
17	3	–	RETROREFLECTIVE MATERIAL	---	6 x 21.5 SEE NOTE 4
18	–	3	RETROREFLECTIVE MATERIAL	---	6 x 17 SEE NOTE 4
19	1	1	TOP TUBE SEAL PLATE	STEEL	1/4 THK
20	2	2	UPPER MOORING EYE	STEEL	3/4 THK

NOTES:

1. SEE LATEST REVISION OF U.S.C.G. CIVIL ENGINEERING SPECIFICATION No. 450 FOR FABRICATION REQUIREMENTS.
2. CUT HOLES IN ITEMS 2 & 3 TO PERMIT A TIGHT FIT WITH ITEM 16. FILL VOID WITH IONOMER FOAM PLUGS.
3. INSTALL ITEM 16, 120 DEGREES APART.
4. COMPRESS FOAM WITH PART 6 UNTIL IT IS COMPRESSED INTO PART 1, APPROXIMATELY 1/4".
5. INSTALL ITEMS 17 AND 18, 120 DEGREES APART AND SIX INCHES FROM THE TOP OF THE BODY.

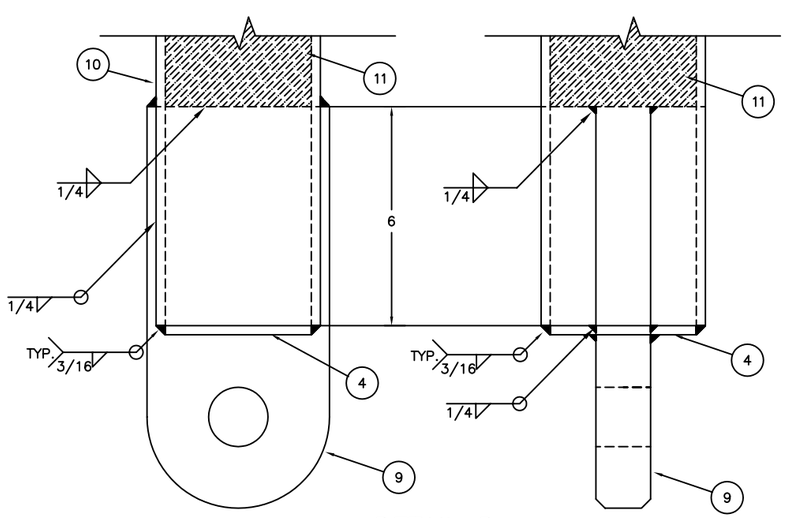

DETAIL D

SCALE: HALF

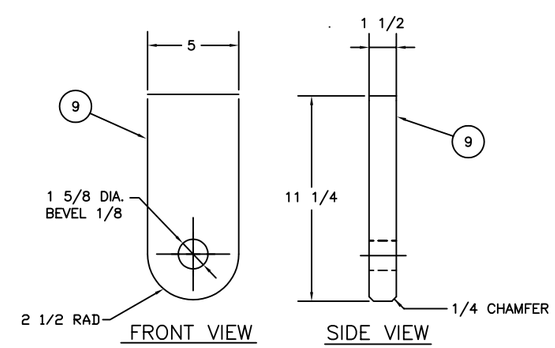

9 DETAIL G

SCALE: 3"=1'-0"

REV.	DATE	APPR.	DESCRIPTION	BY
C	1–5–99	S.W.	MODIFIED QTY OF ITEMS 12 AND 16. ADDED ITEM 20. REORGANIZED NOTES.	S.M.
B	11–24–97	S.W.	MODIFIED SLOT DIMENSION FOR ITEM 5.	S.M.
A	1–22–97	S.W.	REORGANIZED DWG. MODIFIED ITEMS 4, 5, 7, 8, 10, 12, 13, 14, AND 15. ADDED NOTE 7. ADDED ITEM 19.	C.B.

DESIGNED: D.B.
DRAWN: D.B.
TRACED: S.M.
CHECKED: S.M.
REVIEWED BY: D. A. Braganza, PROJECT ENGINEER
REVIEWED BY: S. McEvoy, G-SEC-2B
REVIEWED BY: S. D. Walker, G-SEC-2

U.S. COAST GUARD HEADQUARTERS
CIVIL ENGINEERING

3CFR AND 3NFR UNLIGHTED FOAM BUOYS

APPROVED: L. E. Jaeger, CHIEF, OFFICE OF CIVIL ENGINEERING
DATE: 09-06-95

UNLESS OTHERWISE SPECIFIED:
ALL DIMENSIONS ARE IN INCHES.
TOLERANCES: DIM. ±1/8
ANG. ±1°

DRAWING NUMBER: 121167
REV. C
SCALE: AS NOTED
SHEET 3 OF 3

PLOTTING SCALE: 6"=1'-0"