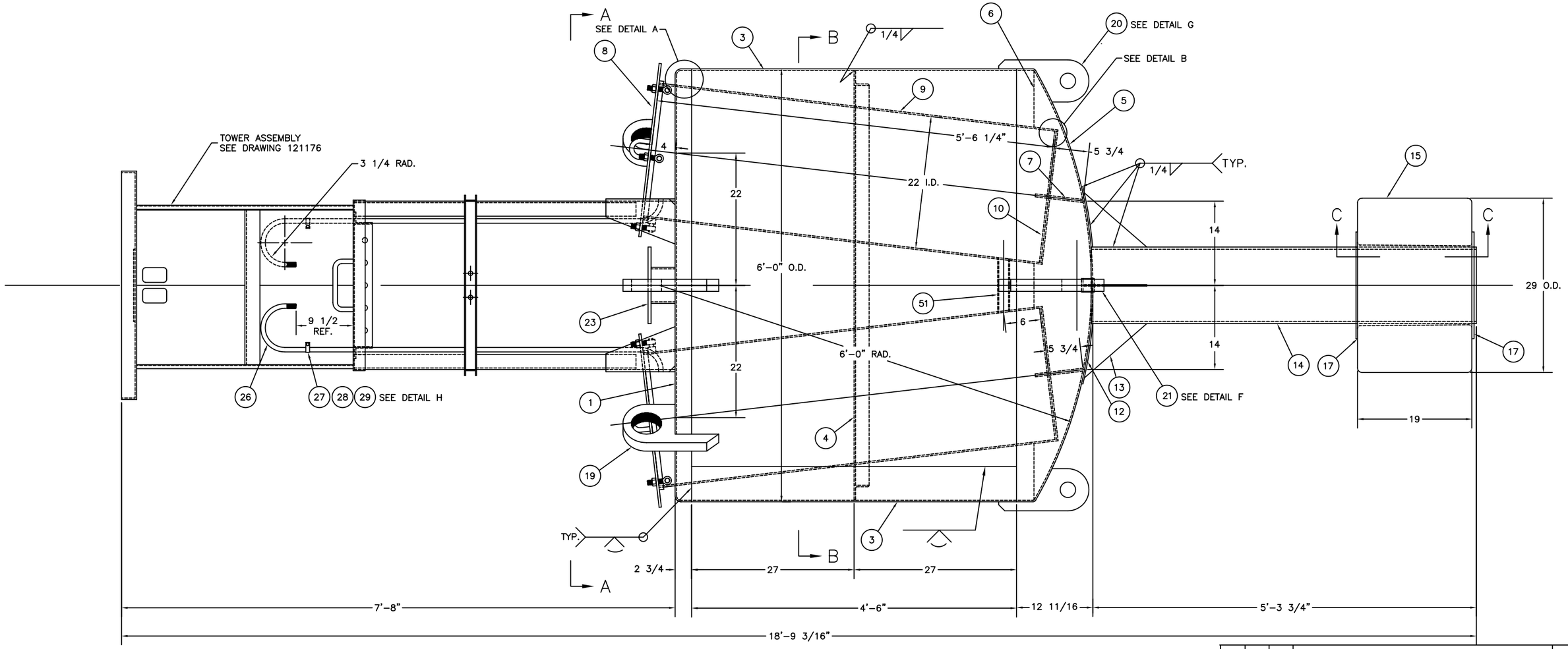

6x20 LR BUOY ASSEMBLY

SCALE: 1 1/2"=1'-0"

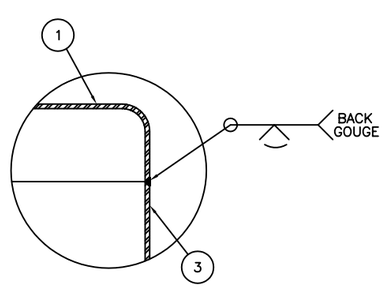

DETAIL A

SCALE: NONE

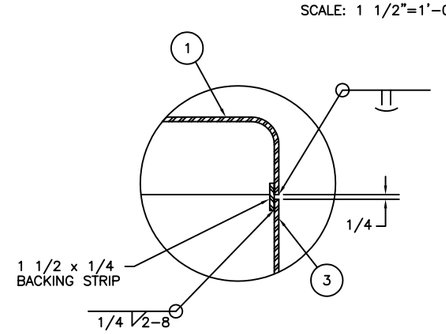

DETAIL A

SCALE: NONE
OPTIONAL

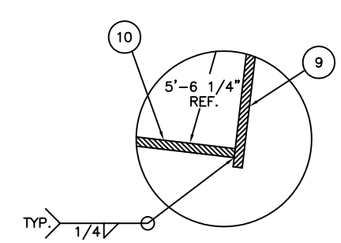

DETAIL B

SCALE: NONE

REV.	DATE	APPR.	DESCRIPTION	BY
F	6-4-99	S.W.	ADDED ADDITIONAL AIR TEST FITTING (ITEMS 24 & 25).	S.M.
E	5-12-99	S.W.	MODIFIED DIMENSION IN DETAIL D.	S.M.
D	10-1-97	S.W.	REORG DWG. DEL TOWER DETAILS. REF DWG 121176 FOR TWR. DEL 2 EA ITES 27, 28, & 29. SHORTEN ITEM 26.	S.M.
C	10-26-94	S.W.	DEL ITEM 49. MOD ITEM 18 & 36. ADDED QTY FOR ITEM 59.	S.M.
B	2-26-93	CAK	REORGANIZED DWG. DELETED FROM BILL OF MATERIALS ITEMS 29-31, 55, & 61-71. MODIFIED ITEMS 3, 4, 12, 39, 48, 49,	S.M.
B	2-26-93	CAK	& 50. SPECIFIED NUMBER REQUIRED FOR ITEMS 43, 53, 56, & 57. ADDED NOTES	S.M.
A	9-15-92	WD	MODIFIED BUOY TOWER AND DELETED ITEMS 52 & 58.	S.M.

DESIGNED:
DRAWN: S.M.
TRACED:
CHECKED: S.M.
REVIEWED BY: R. M. Trainer, PROJECT ENGINEER
REVIEWED BY: S. D. Walker, G-ECV-3B
REVIEWED BY:

U.S. COAST GUARD HEADQUARTERS
CIVIL ENGINEERING

1992 TYPE
6x20 LR BUOY

APPROVED: R. J. Wells, CHIEF, OCEAN ENGINEERING BRANCH
DATE: 6/4/91

UNLESS OTHERWISE SPECIFIED:
ALL DIMENSIONS ARE IN INCHES.
TOLERANCES: DIM. ±1/8
ANG. ±30'

DRAWING NUMBER: 121152
REV. F
SCALE: AS NOTED
SHEET 1 OF 4

PLOTTING SCALE: 1 1/2"=1-0"

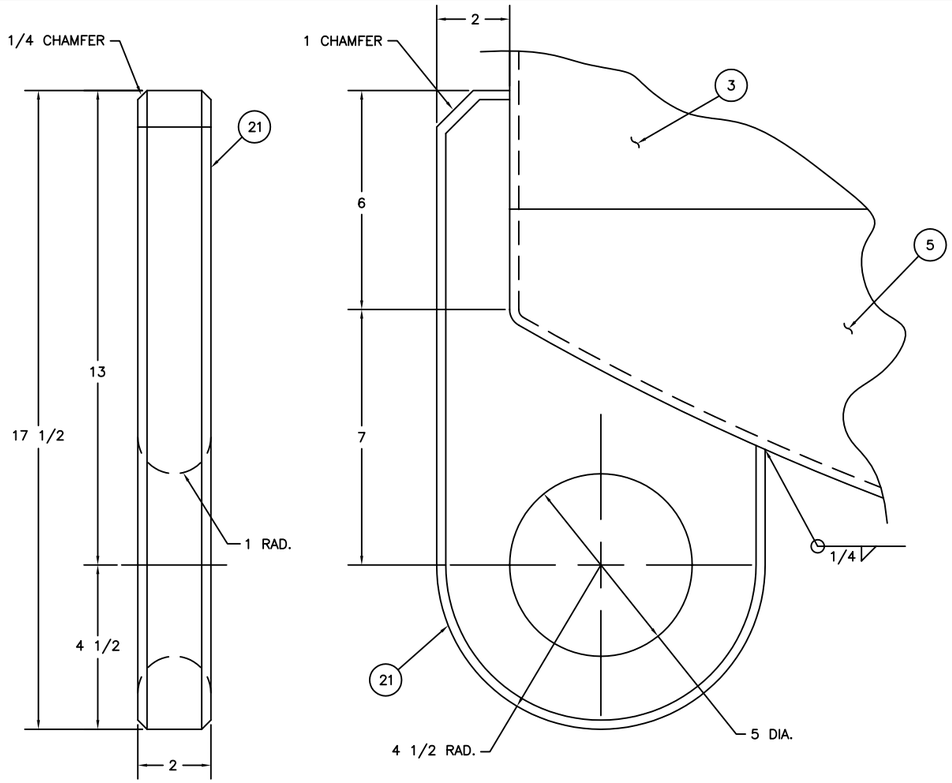

DETAIL F
SCALE: HALF

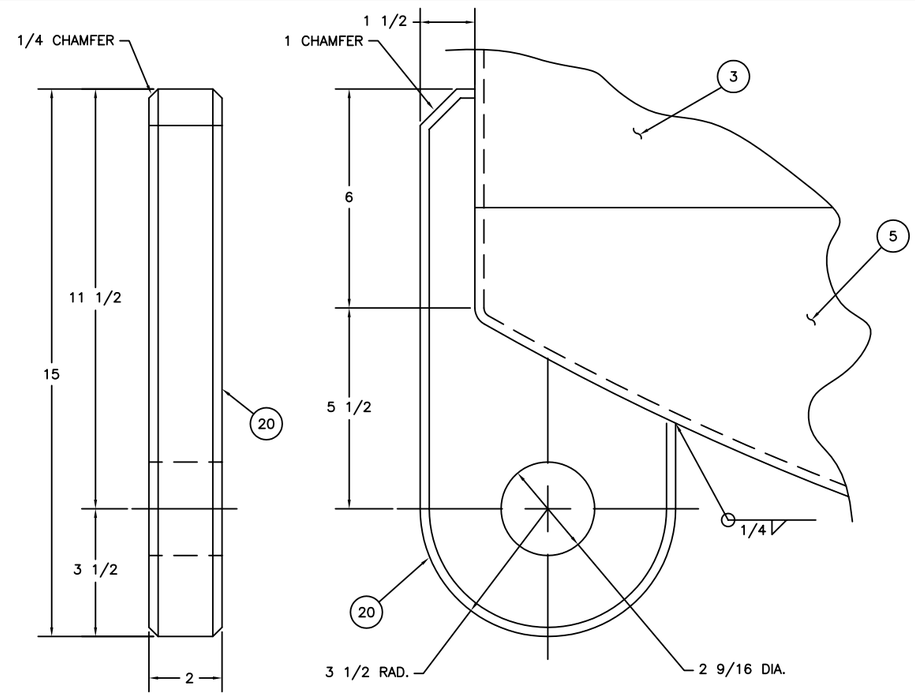

DETAIL G
SCALE: HALF

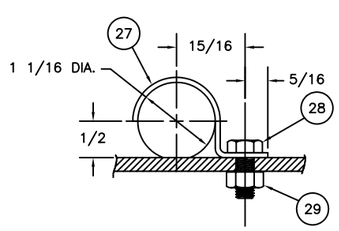

DETAIL H
SCALE: FULL

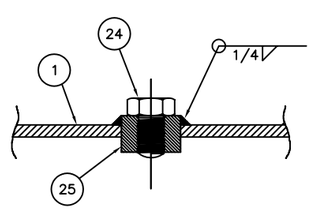

DETAIL J
SCALE: FULL

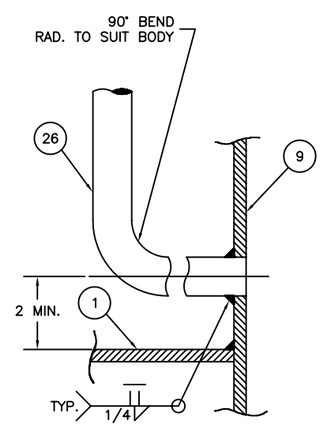

DETAIL K
SCALE: FULL

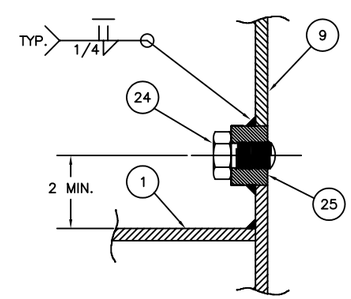

DETAIL M
SCALE: FULL

REV.	DATE	APPR.	DESCRIPTION	BY
F	6–4–99	S.W.	ADDED ADDITIONAL AIR TEST FITTING (ITEMS 24 & 25).	S.M.
E	5–11–99	S.W.	MODIFIED DIMENSION IN DETAIL D.	S.M.
D	10–1–97	S.W.	REORG DWG. DEL TOWER DETAILS. REF DWG 121176 FOR TWR. DEL 2 EA ITES 27, 28, & 29. SHORTEN ITEM 26.	S.M.
C	10–26–94	S.W.	DEL ITEM 49. MOD ITEM 18 & 36. ADDED QTY FOR ITEM 59.	S.M.
B	2–26–93	CAK	REORGANIZED DWG. DELETED FROM BILL OF MATERIALS ITEMS 29–31, 55, & 61–71. MODIFIED ITEMS 3, 4, 12, 39, 48, 49,	S.M.
B	2–26–93	CAK	& 50. SPECIFIED NUMBER REQUIRED FOR ITEMS 43, 53, 56, & 57. ADDED NOTES	S.M.
A	9–15–92	WD	MODIFIED BUOY TOWER AND DELETED ITEMS 52 & 58.	S.M.

DESIGNED:
DRAWN: S.M.
TRACED:
CHECKED: S.M.
REVIEWED BY: R. M. Trainer, PROJECT ENGINEER
REVIEWED BY: S. D. Walker, G–ECV–3B
REVIEWED BY:

U.S. COAST GUARD HEADQUARTERS
CIVIL ENGINEERING

1992 TYPE
6x20 LR BUOY

APPROVED: R. J. Wells, CHIEF, OCEAN ENGINEERING BRANCH
DATE: 6/4/91

UNLESS OTHERWISE SPECIFIED:
ALL DIMENSIONS ARE IN INCHES.
TOLERANCES: DIM. ±1/8
ANG. ±30°

DRAWING NUMBER: 121152
REV. F
SCALE: AS NOTED
SHEET 3 OF 4

PLOTTING SCALE: 6"=1–0"

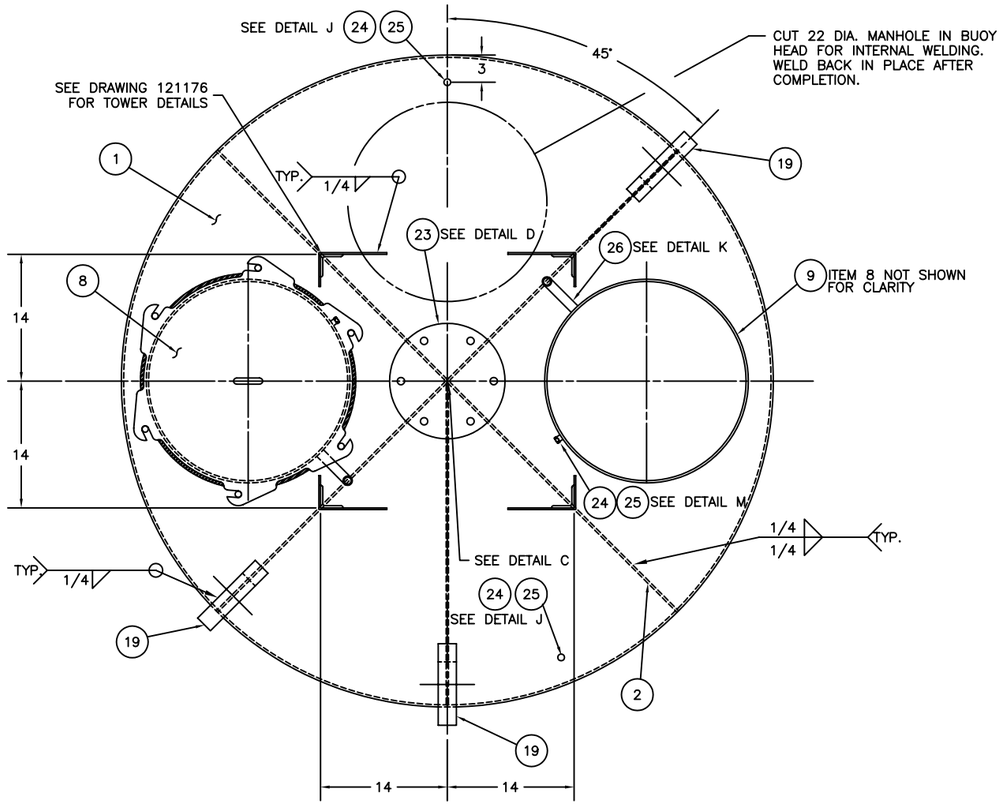

SECTION A–A

SCALE: 1–1/2"=1'–0"

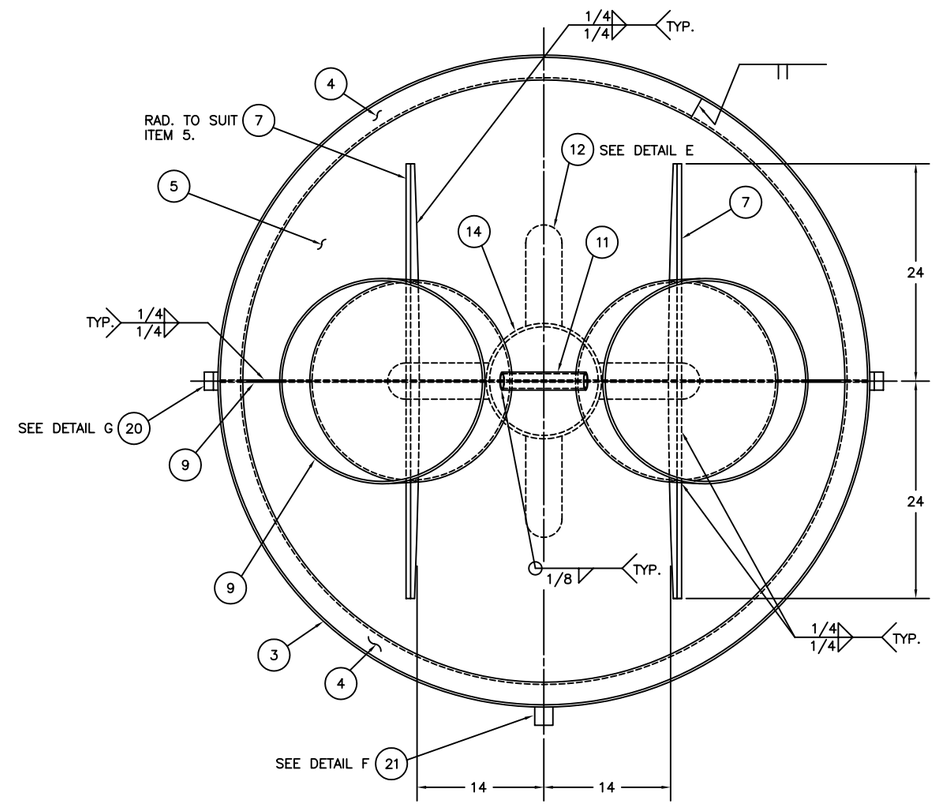

SECTION B–B

SCALE: 1–1/2"=1'–0"

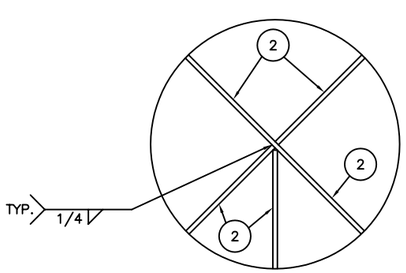

DETAIL C

SCALE: 3"=1'–0"

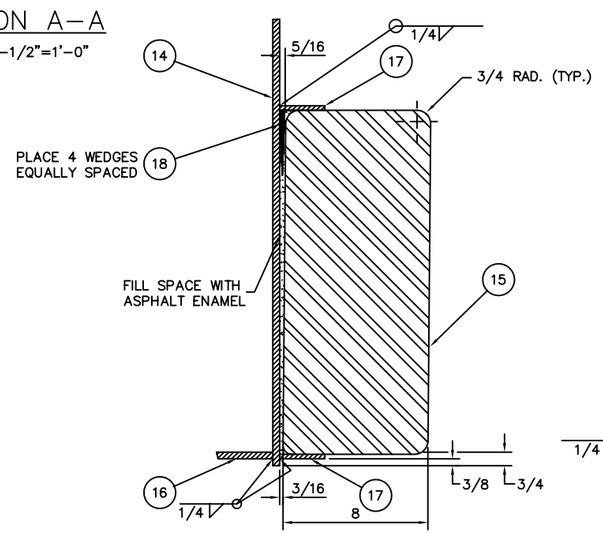

SECTION C–C

SCALE: 3"=1'–0"

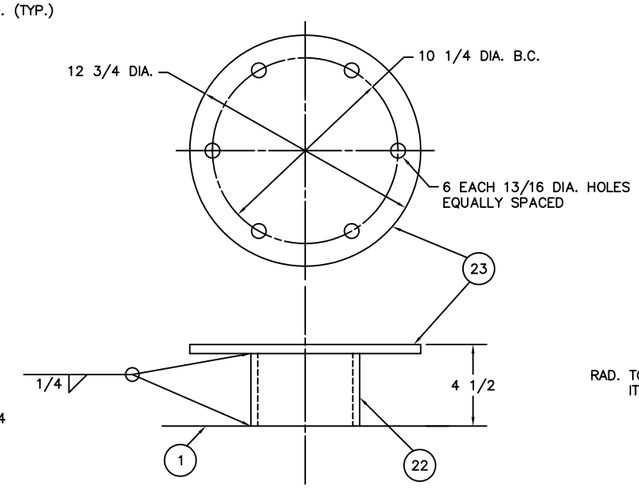

DETAIL D

SCALE: 3"=1'–0"

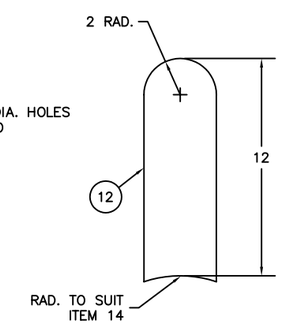

DETAIL E

SCALE: 3"=1'–0"

REV.	DATE	APPR.	DESCRIPTION	BY
F	6–4–99	S.W.	ADDED ADDITIONAL AIR TEST FITTING (ITEMS 24 & 25).	S.M.
E	5–11–99	S.W.	MODIFIED DIMENSION IN DETAIL D.	S.M.
D	10–1–97	S.W.	REORG DWG. DEL TOWER DETAILS. REF DWG 121176 FOR TWR. DEL 2 EA ITES 27, 28, & 29. SHORTEN ITEM 26.	S.M.
C	10–26–94	S.W.	DEL ITEM 49. MOD ITEM 18 & 36. ADDED QTY FOR ITEM 59.	S.M.
B	2–26–93	CAK	REORGANIZED DWG. DELETED FROM BILL OF MATERIALS ITEMS 29–31, 55, & 61–71. MODIFIED ITEMS 3, 4, 12, 39, 48, 49,	S.M.
B	2–26–93	CAK	& 50. SPECIFIED NUMBER REQUIRED FOR ITEMS 43, 53, 56, & 57. ADDED NOTES	S.M.
A	9–15–92	WD	MODIFIED BUOY TOWER AND DELETED ITEMS 52 & 58.	S.M.

DESIGNED:
DRAWN: S.M.
TRACED:
CHECKED: S.M.
REVIEWED BY: R. M. Trainer
PROJECT ENGINEER
REVIEWED BY: S. D. Walker
G-ECV-3B
REVIEWED BY:

U.S. COAST GUARD HEADQUARTERS

CIVIL ENGINEERING

1992 TYPE
6x20 LR BUOY

APPROVED: R. J. Wells
CHIEF, OCEAN ENGINEERING BRANCH

DATE 6/4/91

UNLESS OTHERWISE SPECIFIED:
ALL DIMENSIONS ARE IN INCHES.
TOLERANCES: DIM. ±1/8
ANG. ±30'

DRAWING NUMBER 121152 REV. F

SCALE: AS NOTED SHEET 2 OF 4

PLOTTING SCALE: 1–1/2"=1–0"

BILL OF MATERIALS

ITEM NO.	NO. REQ.	DESCRIPTION	MATL.	REMARKS
1	1	TOP HEAD	STEEL	72 DIA. x 1/4 THK.
2	5	TOP HEAD STIFFNER	STEEL	3 x 1/4 THK.
3	1	WRAPPER	STEEL	72 DIA. x 1/4 THK.
4	1	WRAPPER STIFFENER	STEEL	2-1/2 x 2-1/2 x 1/4
5	1	BOTTOM HEAD	STEEL	72 DIA. x 1/4 THK.
6	1	BOTTOM HEAD STIFFENER	STEEL	10 x 1/4 THK.
7	4	POCKET BRACE	STEEL	8 x 1/4 THK.
8	2	POCKET COVER ASSEMBLY	STEEL	SEE DRAWING 121104
9	2	POCKET WRAPPER	STEEL	1/4 THK.
10	2	POCKET BOTTOM PLATE	STEEL	22 I.D. x 1/4 THK.
11	1	POCKET VENT PIPE	GAL STEEL	2 SCH. 40
12	4	DOUBLER PLATE	STEEL	4 x 1/4 THK. x 12 LG.
13	4	GUSSET	STEEL	9 x 9 x 1/4 THK.
14	1	COUNTERWEIGHT TUBE	STEEL	12 SCH. 40
15	1	COUNTERWEIGHT	CAST IRON	SEE NOTE 2
16	1	COUNTERWEIGHT BOTTOM PLATE	STEEL	1/2 THK.
17	2	COUNTERWEIGHT CLAMP RING	STEEL	12 3/4 ID x 17 3/4 OD x 1/4 THK
18	4	WEDGE	STEEL	1 WD. x 1/4 THK. x 2 1/2 LG.
19	3	TOP HEAD LIFT EYE	STEEL	SEE DRAWING 121140
20	2	MOORING EYE	STEEL	2 THK.
21	1	BOTTOM HEAD LIFT EYE	STEEL	2 THK.
22	1	BELL STAND	STEEL	6 SCH. 80
23	1	BELL STAND PLATE	STEEL	12-3/4 DIA. x 1/2
24	4	PIPE PLUG	STAIN. STEEL	3/4 NPT
25	4	HALF COUPLING	STAIN. STEEL	3/4 NPT
26	2	VENT PIPE	STAIN. STEEL	3/4 SCH 40
27	4	VENT PIPE CLIP	STAIN. STEEL	5/8 x 1/16 THK.
28	4	HEX HEAD CAP SCREW	STAIN STEEL	1/4-20UNC-5/8 LG.
29	4	HEX NUT	STAIN. STEEL	1/4-20UNC

NOTES:

1. SEE LATEST REVISION OF U.S.C.G. CIVIL ENGINEERING SPECIFICATION No. 464 FOR FABRICATION REQUIREMENTS.
2. THE TOTAL WEIGHT OF ITEM 15 SHALL BE 2,600 LBS. (+5% OR -1%).
3. TYPE 304 STAINLESS STEEL MAY BE SUBSTITUTED FOR ITEM 11.

REV.	DATE	APPR.	DESCRIPTION	BY
F	6-4-99	S.W.	ADDED ADDITIONAL AIR TEST FITTING (ITEMS 24 & 25).	S.M.
E	5-11-99	S.W.	MODIFIED DIMENSIONS IN DETAIL D.	S.M.
D	10-1-97	S.W.	REORG DWG. DEL TOWER DETAILS. REF DWG 121176 FOR TWR. DEL 2 EA ITES 27, 28, & 29. SHORTEN ITEM 26.	S.M.
C	10-26-94	S.W.	DEL ITEM 49. MOD ITEM 18 & 36. ADDED QTY FOR ITEM 59.	S.M.
B	2-26-93	CAK	REORGANIZED DWG. DELETED FROM BILL OF MATERIALS ITEMS 29-31, 55, & 61-71. MODIFIED ITEMS 3, 4, 12, 39, 48, 49,	S.M.
B	2-26-93	CAK	& 50. SPECIFIED NUMBER REQUIRED FOR ITEMS 43, 53, 56, & 57. ADDED NOTES	S.M.
A	9-15-92	WD	MODIFIED BUOY TOWER AND DELETED ITEMS 52 & 58.	S.M.

DESIGNED:
DRAWN: S.M.
TRACED:
CHECKED: S.M.
REVIEWED BY: R. M. Trainer
PROJECT ENGINEER
REVIEWED BY: S. D. Walker
G-ECV-3B
REVIEWED BY:

U.S. COAST GUARD HEADQUARTERS
CIVIL ENGINEERING

1992 TYPE
6x20 LR BUOY

APPROVED: R. J. Wells
CHIEF, OCEAN ENGINEERING BRANCH
DATE 6/4/91

UNLESS OTHERWISE SPECIFIED:
ALL DIMENSIONS ARE IN INCHES.
TOLERANCES: DIM. ±1/8
ANG. ±30'

DRAWING NUMBER 121152
REV. F
SCALE: AS NOTED
SHEET 4 OF 4

PLOTTING SCALE: 12"=1-0"