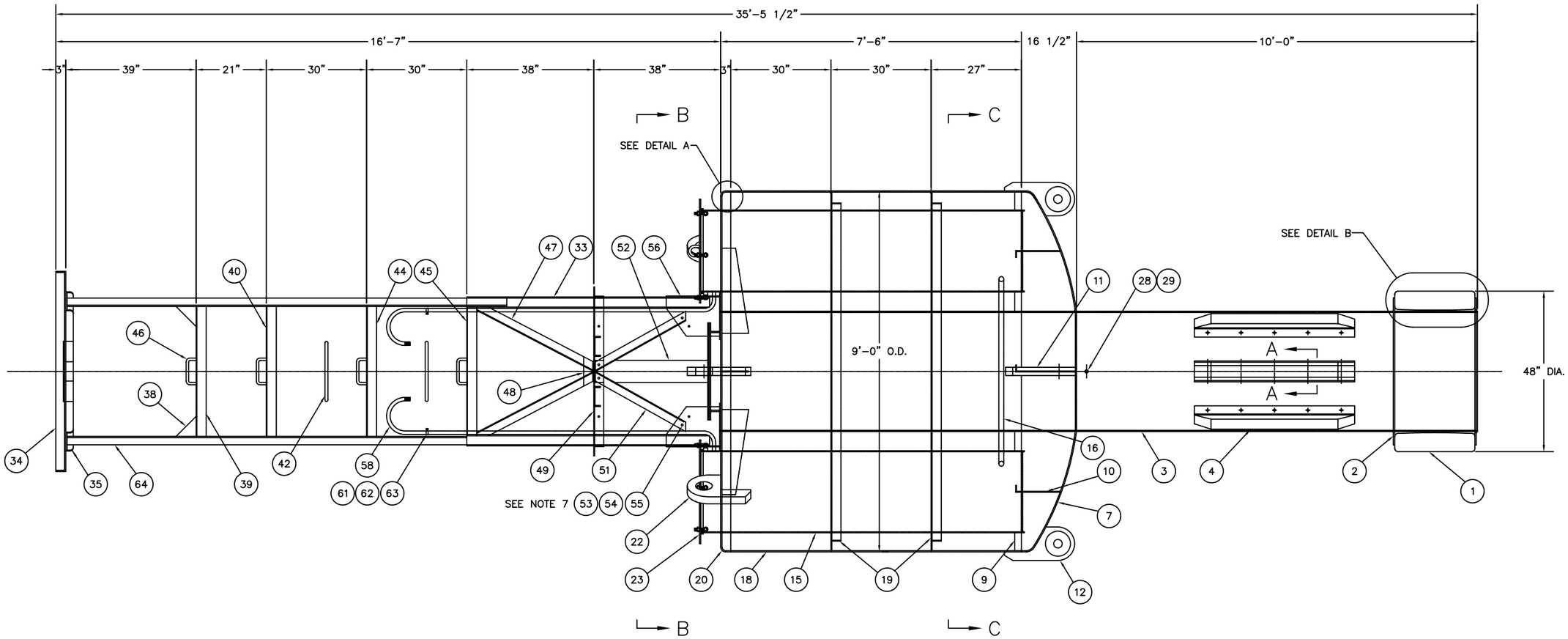

9x35 LWR BUOY

SCALE: 3/4"=1'-0"

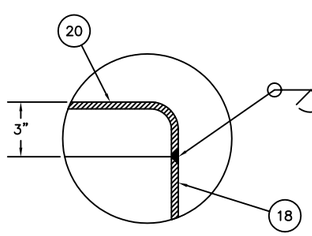

DETAIL A

SCALE: 3"=1'-0"

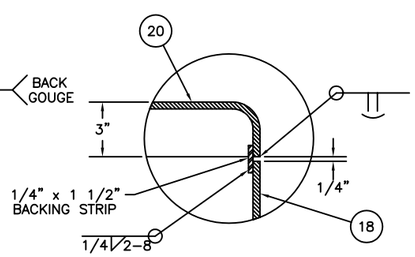

DETAIL A

OPTIONAL

SCALE: 3"=1'-0"

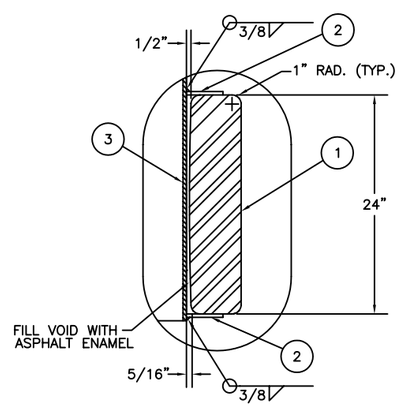

DETAIL B

SCALE: 1 1/2"=1'-0"

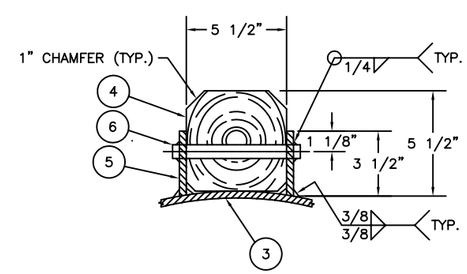

SECTION A-A

SCALE: 3"=1'-0"

REV.	DATE	APPR.	DESCRIPTION	BY
E	11-28-01	WD	MOD QTY REQ FOR ITEM 65.	S.M.
D	6-4-99	S.W.	ADDED ADDITIONAL AIR TEST FITTING (ITEMS 28 & 29). MODIFIED MATERIAL REQUIREMENT FOR ITEM 16.	S.M.
C	10-1-97	S.W.	ADDED 6x6 HOLE IN ITEM 43 (SEE TOWER VIEW). ENLARGED BOLT HOLES FROM 5/8 TO 1 1/8 IN ITEM 50 (SEE SEC K-K).	S.M.
B	10-11-94	SW	ADDED SHEETS 5 AND 6. MODIFIED ITEMS 12, 29, AND 58. DEL QTY REQ FOR ITEMS 61, 62, AND 63.	S.M.
A	3-22-93	CAK	REORGANIZED DRAWING. MODIFIED ITEMS 35, 44, AND NOTES. CUT HOLES & ADDED ITEM 65 TO SECTION C-C.	S.M.
A	3-22-93	CAK	ADDED ITEM 46 TO SECTIONS D-D & E-E. DELETED ITEM 59	S.M.

DESIGNED: PJG
DRAWN: SM
TRACED:
CHECKED:
REVIEWED BY: R. M. Trainer, PROJECT ENGINEER
REVIEWED BY: S. D. Walker, G-ECV-3B
REVIEWED BY:

U.S. COAST GUARD HEADQUARTERS
CIVIL ENGINEERING

9x35 LWR BUOY

APPROVED: R. J. Wells, CHIEF, OCEAN ENGINEERING BRANCH
DATE: 6/4/91

UNLESS OTHERWISE SPECIFIED:
ALL DIMENSIONS ARE IN INCHES.
TOLERANCES: DIM. ±1/8
ANG. ±1°

DRAWING NUMBER: 121151 REV. E
SCALE: AS NOTED SHEET 1 OF 6

PLOTTING SCALE: 3/4"=1'-0"

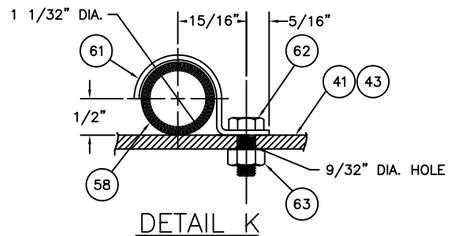

DETAIL K
SCALE: FULL

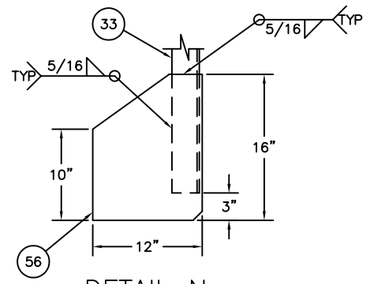

DETAIL N
SCALE: 1 1/2"=1'-0"

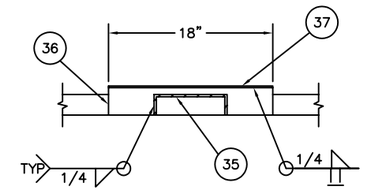

SECTION O-O
SCALE: 1 1/2"=1'-0"

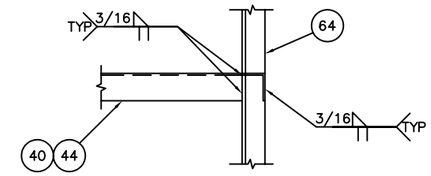

SECTION S-S
SCALE: 1 1/2"=1'-0"

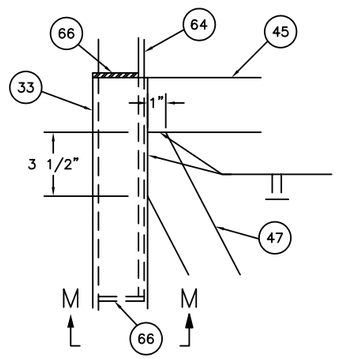

DETAIL L
SCALE: 3"=1'-0"

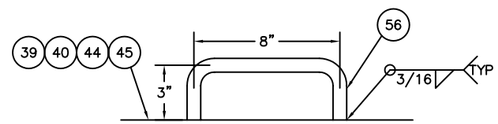

DETAIL O
SCALE: 3"=1'-0"

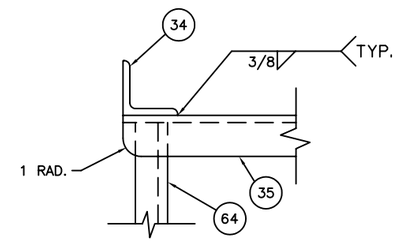

SECTION P-P
SCALE: 3"=1'-0"

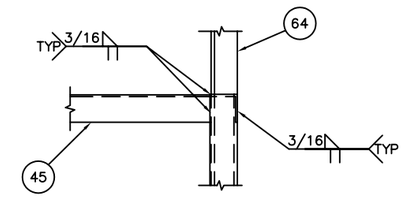

SECTION T-T
SCALE: 1 1/2"=1'-0"

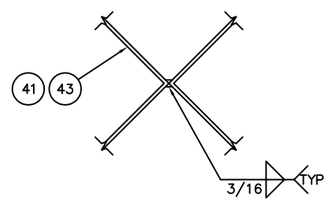

DETAIL P
SCALE: NONE

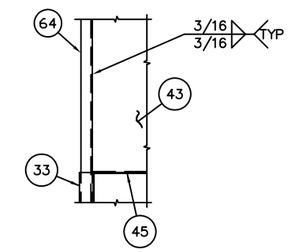

SECTION U-U
SCALE: 3/4"=1'-0"

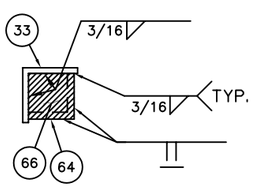

SECTION M-M
SCALE: 3"=1'-0"

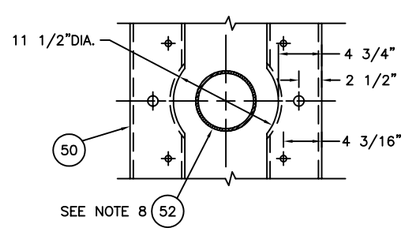

DETAIL Q
SCALE: 1-1/2"=1'-0"

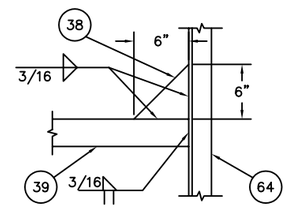

SECTION Q-Q
SCALE: 1 1/2"=1'-0"

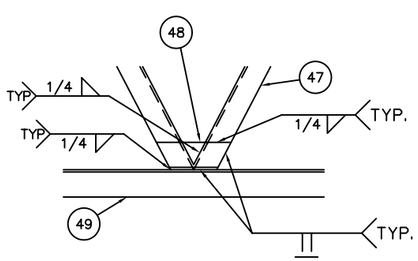

DETAIL M
SCALE: 1-1/2"=1'-0"

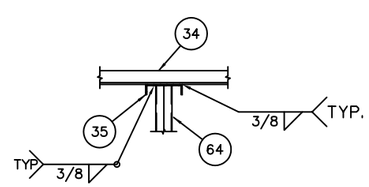

SECTION N-N
SCALE: 3/4"=1'-0"

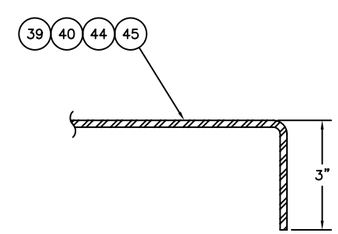

SECTION R-R
SCALE: HALF

REV.	DATE	APPR.	DESCRIPTION	BY
E	11-28-01	WD	MOD QTY REQ FOR ITEM 65.	S.M.
D	6-4-99	S.W.	ADDED ADDITIONAL AIR TEST FITTING (ITEMS 28 & 29). MODIFIED MATERIAL REQUIREMENT FOR ITEM 16.	S.M.
C	10-1-97	S.W.	ADDED 6x6 HOLE IN ITEM 43 (SEE TOWER VIEW). ENLARGED BOLT HOLES FROM 5/8 TO 1 1/8 IN ITEM 50 (SEE SEC K-K)	S.M.
B	10-11-94	SW	ADDED SHEETS 5 AND 6. MODIFIED ITEMS 12, 29, AND 58. DEL QTY REQ FOR ITEMS 61, 62, AND 63.	S.M.
A	3-22-93	CAK	REORGANIZED DRAWING. MODIFIED ITEMS 35, 44, AND NOTES. CUT HOLES & ADDED ITEM 65 TO SECTION C-C.	S.M.
A	3-22-93	CAK	ADDED ITEM 46 TO SECTIONS D-D & E-E. DELETED ITEM 59	S.M.

DESIGNED: PJG
DRAWN: SM
TRACED:
CHECKED:
REVIEWED BY: R. M. Trainer
PROJECT ENGINEER
REVIEWED BY: S. D. Walker
G-ECV-3B
REVIEWED BY:

U.S. COAST GUARD HEADQUARTERS
CIVIL ENGINEERING

9x35 LWR
BUOY

APPROVED: R. J. Wells
CHIEF, OCEAN ENGINEERING BRANCH
DATE 6/4/91

UNLESS OTHERWISE SPECIFIED:
ALL DIMENSIONS ARE IN INCHES.
TOLERANCES: DIM. ±1/8
ANG. ±1°

DRAWING NUMBER 121151 REV. E
SCALE: AS NOTED SHEET 5 OF 6

PLOTTING SCALE: 3/4"=1'-0"

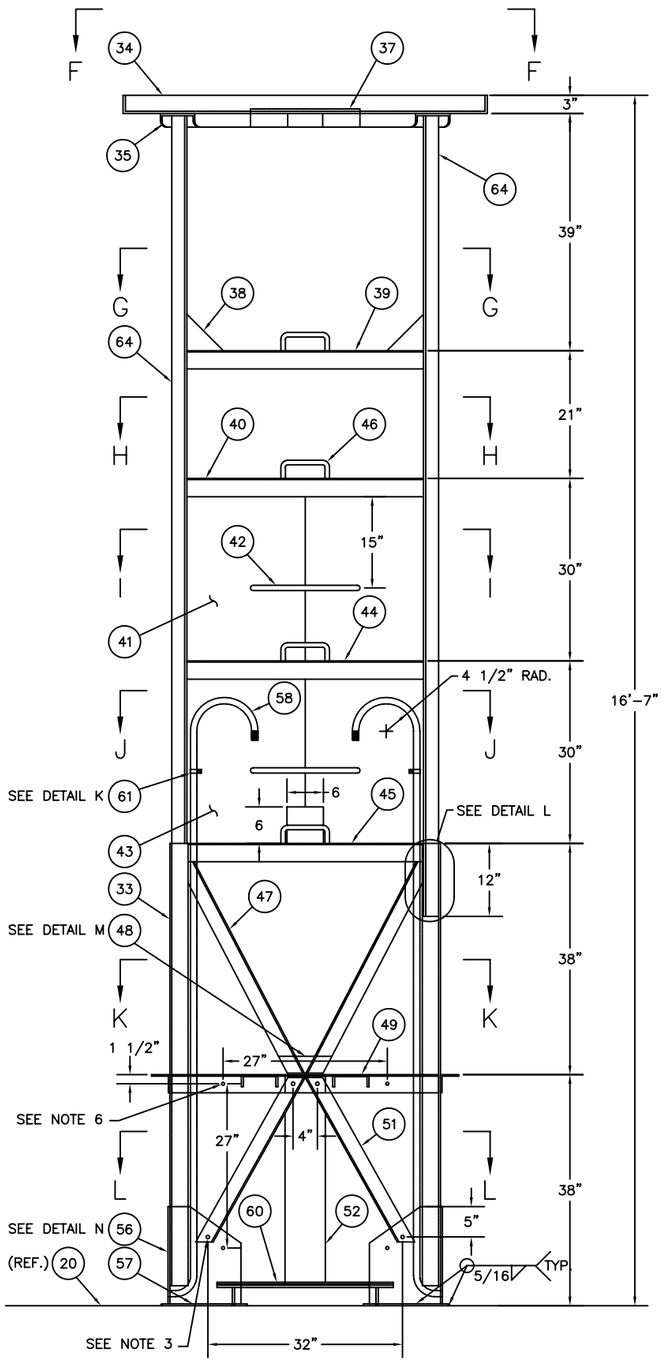

9X35 TOWER

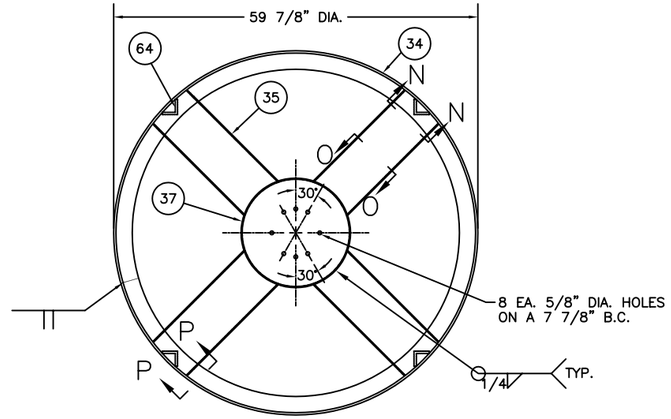

SECTION F–F

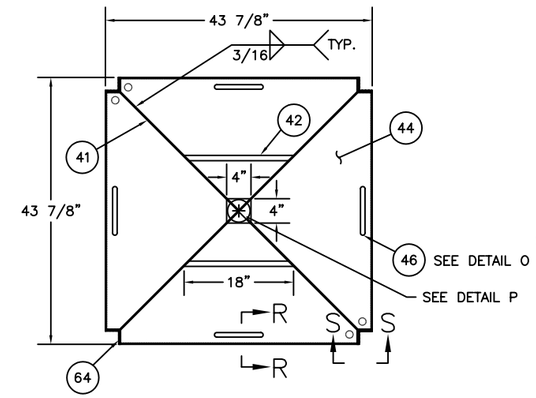

SECTION I–I

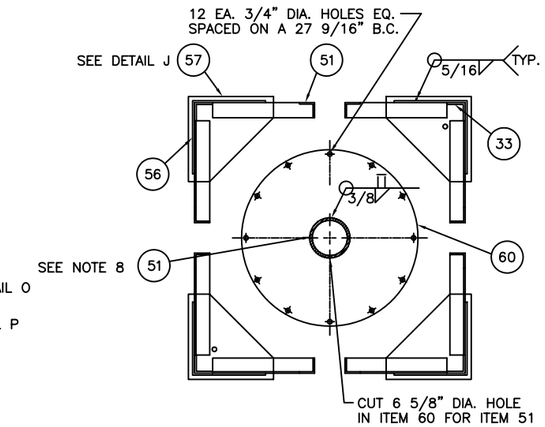

SECTION L–L

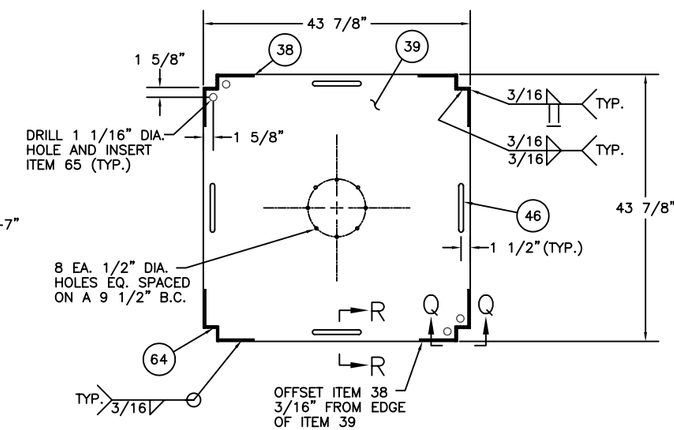

SECTION G–G

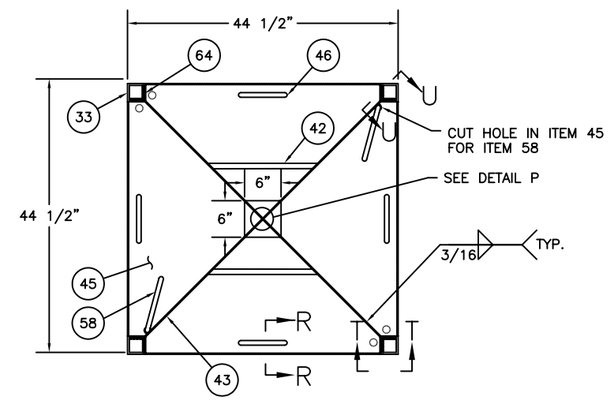

SECTION J–J

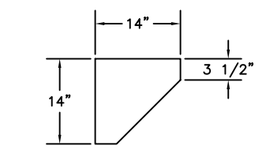

57 DETAIL J

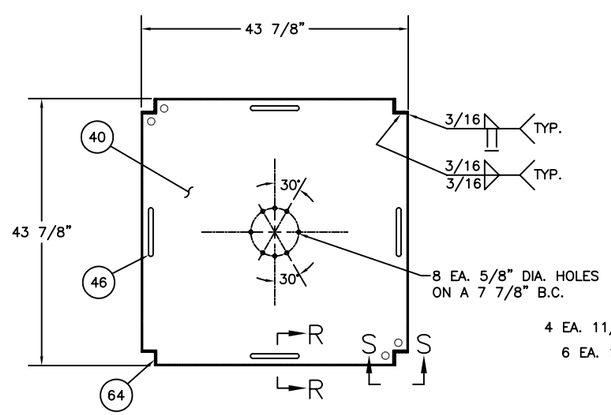

SECTION H–H

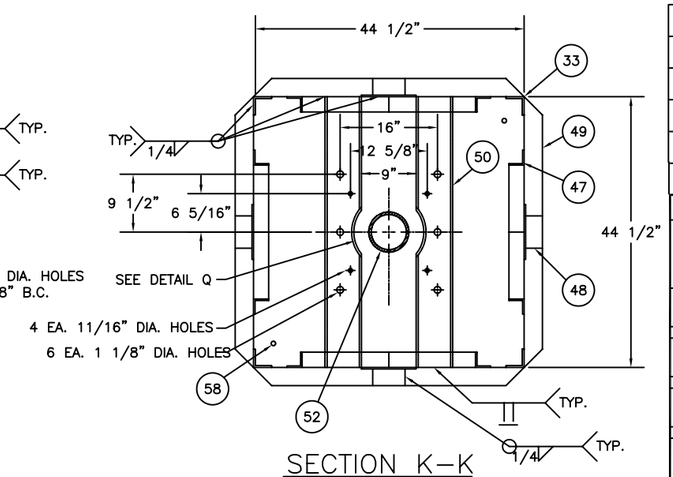

SECTION K–K

REV.	DATE	APPR.	DESCRIPTION	BY
E	11–28–01	WD	MOD QTY REQ FOR ITEM 65.	S.M.
D	6–4–99	S.W.	ADDED ADDITIONAL AIR TEST FITTING (ITEMS 28 & 29). MODIFIED MATERIAL REQUIREMENT FOR ITEM 16.	S.M.
C	10–1–97	S.W.	ADDED 6x6 HOLE IN ITEM 43 (SEE TOWER VIEW). ENLARGED BOLT HOLES FROM 5/8 TO 1 1/8 IN ITEM 50 (SEE SEC K–K)	S.M.
B	10–11–94	SW	ADDED SHEETS 5 AND 6. MODIFIED ITEMS 12, 29, AND 58. DEL QTY REQ FOR ITEMS 61, 62, AND 63.	S.M.
A	3–22–93	CAK	REORGANIZED DRAWING. MODIFIED ITEMS 35, 44, AND NOTES. CUT HOLES & ADDED ITEM 65 TO SECTION C–C.	S.M.
A	3–22–93	CAK	ADDED ITEM 46 TO SECTIONS D–D & E–E. DELETED ITEM 59	S.M.

DESIGNED: PJG
DRAWN: SM
TRACED:
CHECKED:
REVIEWED BY: R. M. Trainer, PROJECT ENGINEER
REVIEWED BY: S. D. Walker, G–ECV–3B
REVIEWED BY:

U.S. COAST GUARD HEADQUARTERS
CIVIL ENGINEERING

9x35 LWR
BUOY

APPROVED: R. J. Wells, CHIEF, OCEAN ENGINEERING BRANCH
DATE 6/4/91

UNLESS OTHERWISE SPECIFIED:
ALL DIMENSIONS ARE IN INCHES.
TOLERANCES: DIM. ±1/8
ANG. ±1°

DRAWING NUMBER 121151 REV. E
SCALE: AS NOTED SHEET 4 OF 6

PLOTTING SCALE: 1"=1'–0"

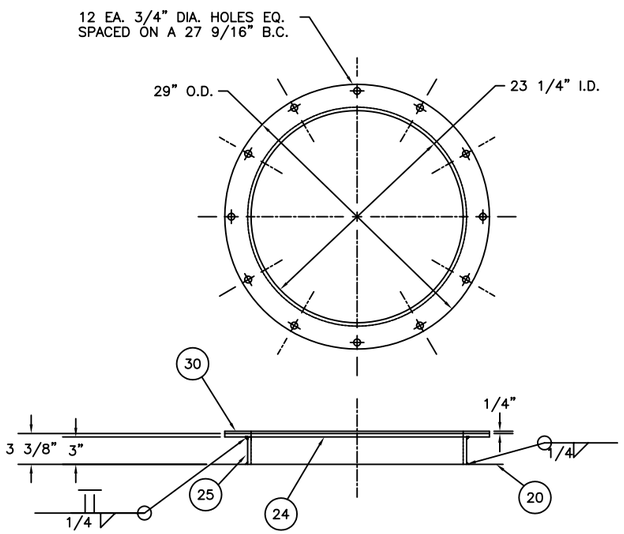

DETAIL C

SCALE: 1 1/2"=1'-0"

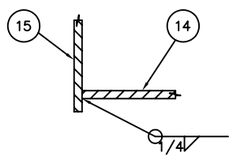

DETAIL D

SCALE: NONE

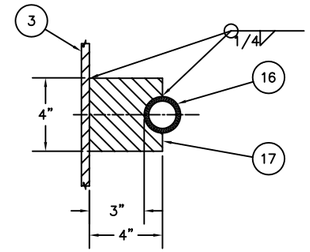

SECTION E-E

SCALE: 3"=1'-0"

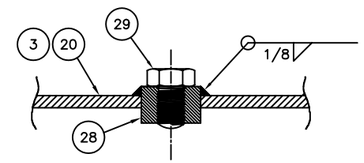

DETAIL E

SCALE: HALF

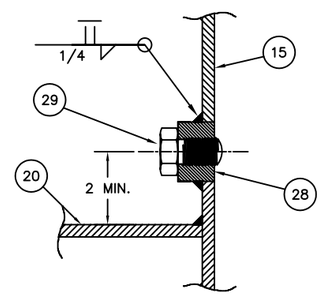

DETAIL F

SCALE: HALF

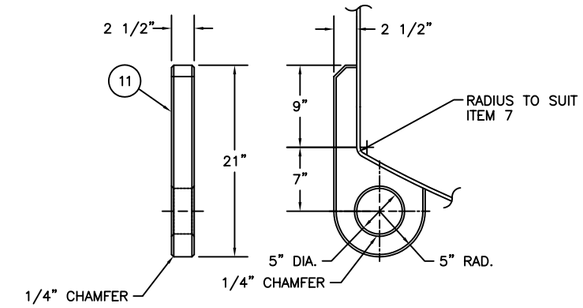

DETAIL H

SCALE: 1 1/2"=1'-0"

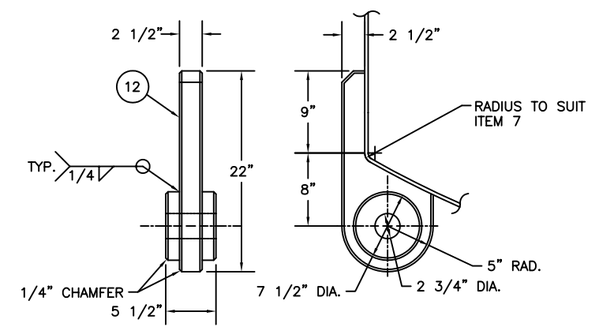

DETAIL I

SCALE: 1 1/2"=1'-0"

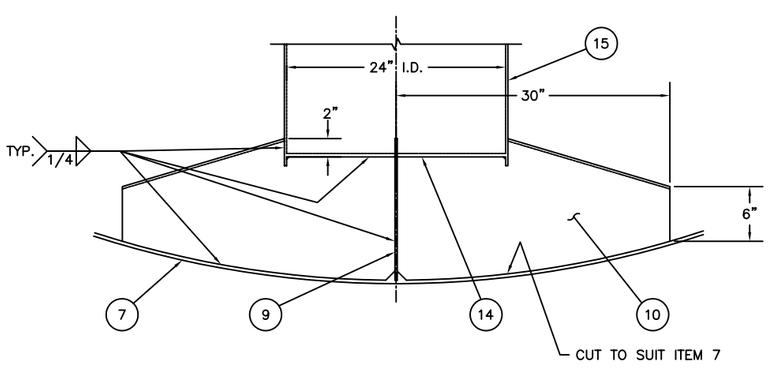

SECTION D-D

SCALE: 1 1/2"=1'-0"

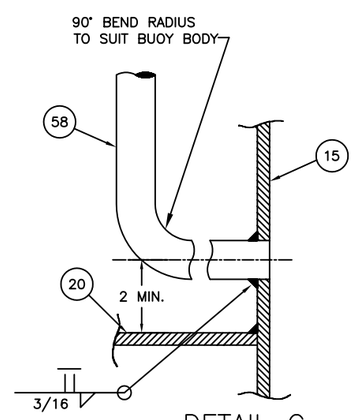

DETAIL G

SCALE: HALF

REV.	DATE	APPR.	DESCRIPTION	BY
E	11-28-01	WD	MOD QTY REQ FOR ITEM 65.	S.M.
D	6-4-99	S.W.	ADDED ADDITIONAL AIR TEST FITTING (ITEMS 28 & 29). MODIFIED MATERIAL REQUIREMENT FOR ITEM 16.	S.M.
C	10-1-97	S.W.	ADDED 6x6 HOLE IN ITEM 43 (SEE TOWER VIEW). ENLARGED BOLT HOLES FROM 5/8 TO 1 1/8 IN ITEM 50 (SEE SEC K-K).	S.M.
B	10-11-94	SW	ADDED SHEETS 5 AND 6. MODIFIED ITEMS 12, 29, AND 58. DEL QTY REQ FOR ITEMS 61, 62, AND 63.	S.M.
A	3-22-93	CAK	REORGANIZED DRAWING. MODIFIED ITEMS 35, 44, AND NOTES. CUT HOLES & ADDED ITEM 65 TO SECTION C-C.	S.M.
A	3-22-93	CAK	ADDED ITEM 46 TO SECTIONS D-D & E-E. DELETED ITEM 59	S.M.

DESIGNED: PJG
DRAWN: SM
TRACED:
CHECKED:
REVIEWED BY: R. M. Trainer, PROJECT ENGINEER
REVIEWED BY: S. D. Walker, G-ECV-3B
REVIEWED BY:

U.S. COAST GUARD HEADQUARTERS

CIVIL ENGINEERING

9x35 LWR
BUOY

APPROVED: R. J. Wells, CHIEF, OCEAN ENGINEERING BRANCH

DATE: 6/4/91

UNLESS OTHERWISE SPECIFIED:
ALL DIMENSIONS ARE IN INCHES.
TOLERANCES: DIM. ±1/8
ANG. ±1°

DRAWING NUMBER: 121151 REV. E

SCALE: AS NOTED SHEET 3 OF 6

PLOTTING SCALE: 1-1/2"=1'-0"

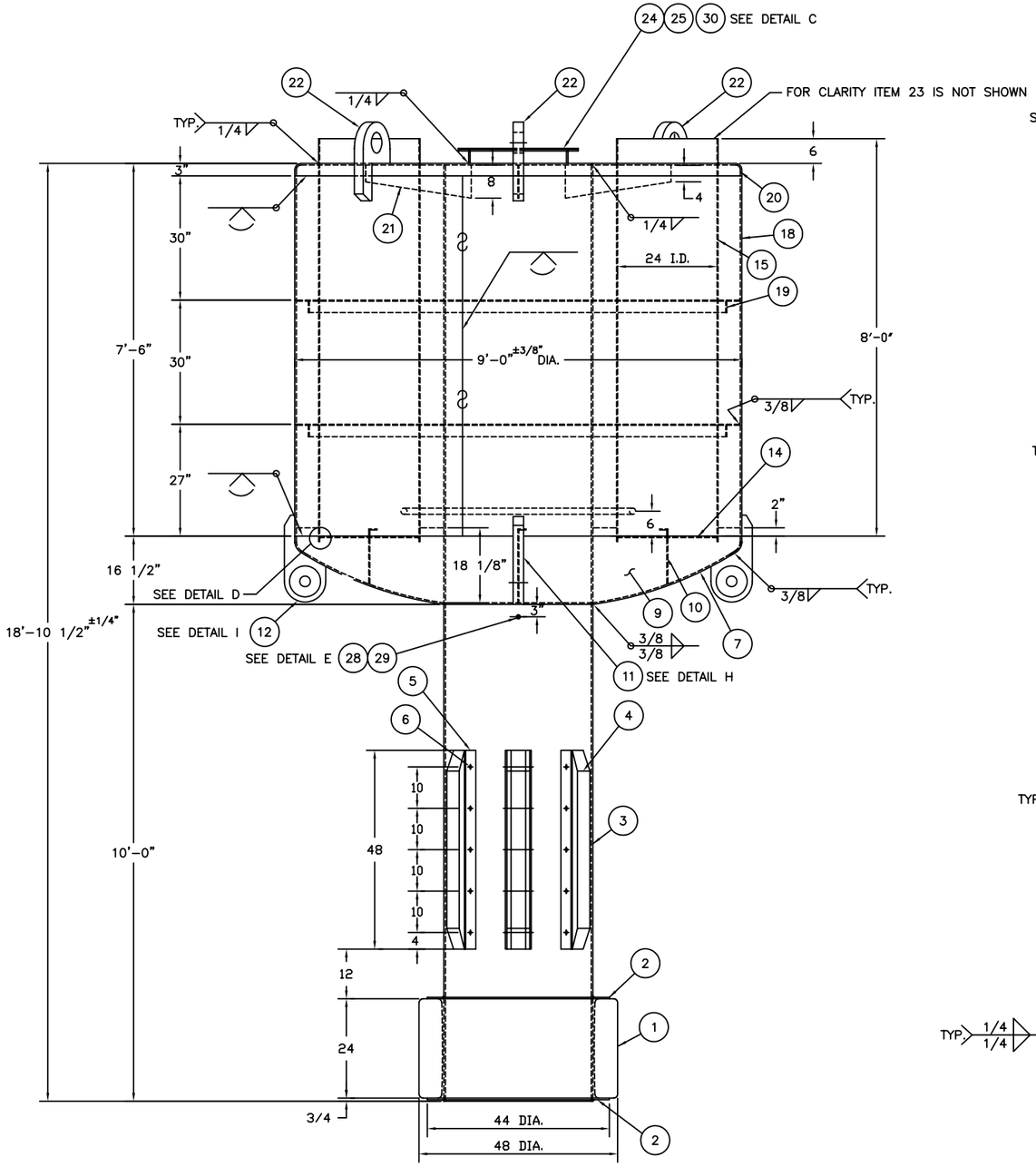

9X35 BUOY HULL

SCALE: 3/4"=1'-0"

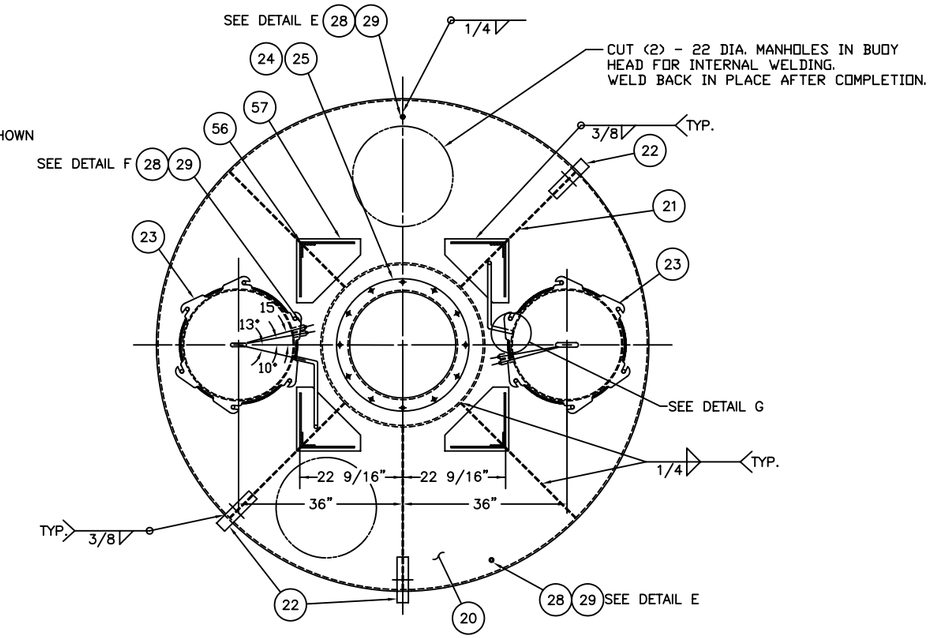

SECTION B-B

SCALE: 3/4"=1'-0"

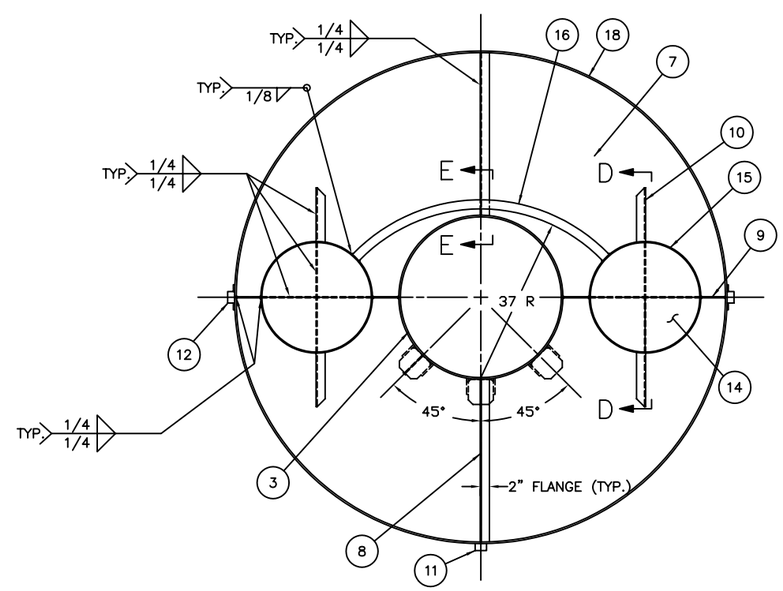

SECTION C-C

SCALE: 3/4"=1'-0"

REV.	DATE	APPR.	DESCRIPTION	BY
E	11-28-01	WD	MOD QTY REQ FOR ITEM 65.	S.M.
D	6-4-99	S.W.	ADDED ADDITIONAL AIR TEST FITTING (ITEMS 28 & 29). MODIFIED MATERIAL REQUIREMENT FOR ITEM 16.	S.M.
C	10-1-97	S.W.	ADDED 6x6 HOLE IN ITEM 43 (SEE TOWER VIEW). ENLARGED BOLT HOLES FROM 5/8 TO 1 1/8 IN ITEM 50 (SEE SEC K-K)	S.M.
B	10-11-94	SW	ADDED SHEETS 5 AND 6. MODIFIED ITEMS 12, 29, AND 58. DEL QTY REQ FOR ITEMS 61, 62, AND 63.	S.M.
A	3-22-93	CAK	REORGANIZED DRAWING. MODIFIED ITEMS 35, 44, AND NOTES. CUT HOLES & ADDED ITEM 65 TO SECTION C-C.	S.M.
A	3-22-93	CAK	ADDED ITEM 46 TO SECTIONS D-D & E-E. DELETED ITEM 59	S.M.

DESIGNED: PJG
DRAWN: SM
TRACED:
CHECKED:
REVIEWED BY: R. M. Trainer, PROJECT ENGINEER
REVIEWED BY: S. D. Walker, G-ECV-3B
REVIEWED BY:

U.S. COAST GUARD HEADQUARTERS

CIVIL ENGINEERING

9x35 LWR BUOY

APPROVED: R. J. Wells, CHIEF, OCEAN ENGINEERING BRANCH

DATE: 6/4/91

UNLESS OTHERWISE SPECIFIED:
ALL DIMENSIONS ARE IN INCHES.
TOLERANCES: DIM. ±1/8
ANG. ±1°

DRAWING NUMBER: 121151 REV. E

SCALE: AS NOTED SHEET 2 OF 6

PLOTTING SCALE: 3/4"=1'-0'

BILL OF MATERIALS

ITEM NO.	NO. REQ.	DESCRIPTION	MATL.	REMARKS
1	1	COUNTERWEIGHT	CAST IRON	SEE NOTE 4
2	2	COUNTERWEIGHT RING	STEEL	3/8 THK.
3	1	COUNTERWEIGHT TUBE	STEEL	36 O.D. x 3/8 THK.
4	3	FENDER	WOOD	SEE SPEC.
5	6	FENDER SUPPORTS	STEEL	3/8 THK.
6	15	FENDER ROD	STEEL	3/4 DIA. x 7 LG.
7	1	BUOY BOTTOM HEAD	STEEL	3/8 THK.
8	2	BOTTOM HD. STIFFENER	STEEL	1/4 THK.
9	2	POCKET STIFFENER	STEEL	1/4 THK.
10	4	POCKET BRACE	STEEL	1/4 THK.
11	1	BOTTOM LIIFTING EYE	STEEL	SEE DETAIL H
12	2	MOORING EYE	STEEL	SEE DETAIL I
14	2	POCKET BOTTOM PLATE	STEEL	24 DIA. x 3/8 THK.
15	2	POCKET WRAPPER	STEEL	1/4 THK.
16	1	POCKET VENT PIPE	GALV. STEEL	2 SCH. 40 PIPE
17	1	VENT PIPE BRACE PLATE	STEEL	1/4 THK.
18	1	BODY WRAPPER	STEEL	3/8 THK.
19	2	WRAPPER STIFFNER	STEEL	3 x 3 x 1/4 L
20	1	TOP HEAD	STEEL	3/8 THK.
21	5	TOP HEAD BRACE	STEEL	1/4 THK.
22	3	LIFTING EYE	STEEL	SEE DRAWING 121140
23	2	POCKET COVER ASSEMBLY	STEEL	SEE DRAWING 121143
24	1	GENERATOR BASE PLATE	STEEL	3/8 THK.
25	1	CASE PLATE PIPE	STEEL	3/8 THK.
28	7	HALF COUPLING	STAIN. STEEL	3/4 NPT
29	7	PIPE PLUG	STAIN. STEEL	3/4 NPT
30	1	GASKET	RUBBER	1/4 THK.
33	4	TOWER LEGS	STEEL	3 x 3 x 3/8 L
34	1	LANTERN RING	STEEL	3 x 3 x 3/8 L
35	4	LANTERN STAND SUPPORTS	STEEL	C 8 x 11.5
36	1	LANTERN STAND RING	STEEL	3 x 1/4 THK.
37	1	LANTERN STAND PLATE	STEEL	18 DIA. x 3/16 THK.
38	8	CORNER BRACES	STEEL	3/16 THK.
39	1	UPPER PLATFORM	STEEL	3/16 THK.
40	1	LOWER PLATFORM	STEEL	3/16 THK.
41	2	UPPER R/R PLATES	STEEL	3/16 THK., SEE NOTE 2
42	4	STEPS	STEEL	7/8 DIA. x 18 LG.
43	2	LOWER R/R PLATES	STEEL	3/16 THK., SEE NOTE 2
44	1	MIDDLE R/R PLATFORM	STEEL	3/16 THK.
45	1	LOWER R/R PLATFORM	STEEL	3/16 THK.
46	16	GRAB BAR	STEEL	3/4 DIA. ROD
47	8	UPPER TOWER STRUTS	STEEL	2-1/2 x 2-1/2 x 1/4 L
48	4	STRUT SUPPORTS	STEEL	3 x 3 x 1/4 L
49	4	TOWER BRACES	STEEL	3 x 3 x 1/4 L
50	2	SOUND SIGNAL SUPPORTS	STEEL	C 6 x 10.5
51	8	LOWER TOWER STRUTS	STEEL	2-1/2 x 2-1/2 x 1/4 L
52	1	WHISTLE PIPE	STEEL	6 SCH 40x34-1/8 LG SEE NOTE 8
53	16	HEX HEAD BOLT	STAIN. STEEL	5/8-11 UNC x 2 LG.

BILL OF MATERIALS

ITEM NO.	NO. REQ.	DESCRIPTION	MATL.	REMARKS
54	32	WASHER	STAIN. STEEL	5/8
55	16	NUT	STAIN. STEEL	5/8-11 UNC
56	4	TOWER LEG SUPPORTS	STEEL	5/16 THK.
57	4	TOWER BASE PLATE	STEEL	5/16 THK.
58	2	VENT	STAIN. STEEL	3/4 IPS SCH 40
60	1	WHISTLE PIPE COVER PLATE	STEEL	1/4 THK., 29 O.D.
61	2	VENT PIPE CLIP	STAIN. STEEL	5/8 x .062 STRIP
62	2	HEX HEAD CAP SCREW	STAIN. STEEL	1/4-20 UNC x 5/8 LG
63	2	HEX HEAD NUT	STAIN. STEEL	1/4-20 UNC
64	4	RADAR REFLECTOR POST	STEEL	2-1/2 x 2-1/2 x 3/8 L
65	16	GROMMET	RUBBER	3/4 I.D. x 3/16 GROOVE WIDTH
66	8	CAP PLATE	STEEL	2-1/2 SQ. x 1/4 THK.

NOTES:

1. SEE LATEST REVISION OF U.S.C.G. CIVIL ENGINEERING SPECIFICATION No. 464 FOR FABRICATION REQUIREMENTS.
2. RADAR RELECTOR PLATES MAY BE ASSEMBLED BY MATCHING APPROPRIATE SLOTS IN EACH PIECE AND WELDING, OR BY BENDING AND WELDING AS SHOWN IN DETAIL P.
3. INSTALL TOWER SO THAT THE SIDE WITH THE BOLTED LOWER TOWER STRUTS FACE IN THE DIRECTION OF THE OFFSET LIFTING BAIL.
4. ITEM 1 SHALL WEIGH 4,575 LBS. (+5% OR -1%).
5. 3/4 x 7-1/2 BOLT MAY BE USED IN PLACE OF ITEM 6.
6. FOUR EACH 1/2 DIAMETER HOLES AT 27 O.C. FOR SOLAR PANEL INSTALLATION (ALL FOUR FACES).
7. ITEMS 51 ARE BOLTED AS SHOWN ON ONE SIDE OF THE TOWER ONLY. OTHER THREE SIDES ARE WELDED USING 5/16 FILLET WELDS.
8. THE TOP OF ITEM 52 SHALL BE FLUSH WITH THE TOP OF ITEM 50.
9. TYPE 304 STAINLESS STEEL MAY BE SUBSTITUTED FOR ITEM 16.

REV.	DATE	APPR.	DESCRIPTION	BY
E	11-28-01	WD	MOD QTY REQ FOR ITEM 65.	S.M.
D	6-4-99	S.W.	ADDED ADDITIONAL AIR TEST FITTING (ITEMS 28 & 29). MODIFIED MATERIAL REQUIREMENT FOR ITEM 16.	S.M.
C	10-1-97	S.W.	ADDED 6x6 HOLE IN ITEM 43 (SEE TOWER VIEW). ENLARGED BOLT HOLES FROM 5/8 TO 1 1/8 IN ITEM 50 (SEE SEC K-K)	S.M.
B	10-11-94	SW	ADDED SHEETS 5 AND 6. MODIFIED ITEMS 12, 29, AND 58. DEL QTY REQ FOR ITEMS 61, 62, AND 63.	S.M.
A	3-22-93	CAK	REORGANIZED DRAWING. MODIFIED ITEMS 35, 44, AND NOTES. CUT HOLES & ADDED ITEM 65 TO SECTION C-C.	S.M.
A	3-22-93	CAK	ADDED ITEM 46 TO SECTIONS D-D & E-E. DELETED ITEM 59	S.M.

DESIGNED: PJG
DRAWN: SM
TRACED:
CHECKED:
REVIEWED BY: R. M. Trainer, PROJECT ENGINEER
REVIEWED BY: S. D. Walker, G-ECV-3B
REVIEWED BY:

U.S. COAST GUARD HEADQUARTERS
CIVIL ENGINEERING

9x35 LWR BUOY

APPROVED: R. J. Wells, CHIEF, OCEAN ENGINEERING BRANCH
DATE: 6/4/91

UNLESS OTHERWISE SPECIFIED:
ALL DIMENSIONS ARE IN INCHES.
TOLERANCES: DIM. ±1/8
ANG. ±1°

DRAWING NUMBER: 121151
REV. E
SCALE: AS NOTED
SHEET 6 OF 6

PLOTTING SCALE: 3/4"=1'-0"