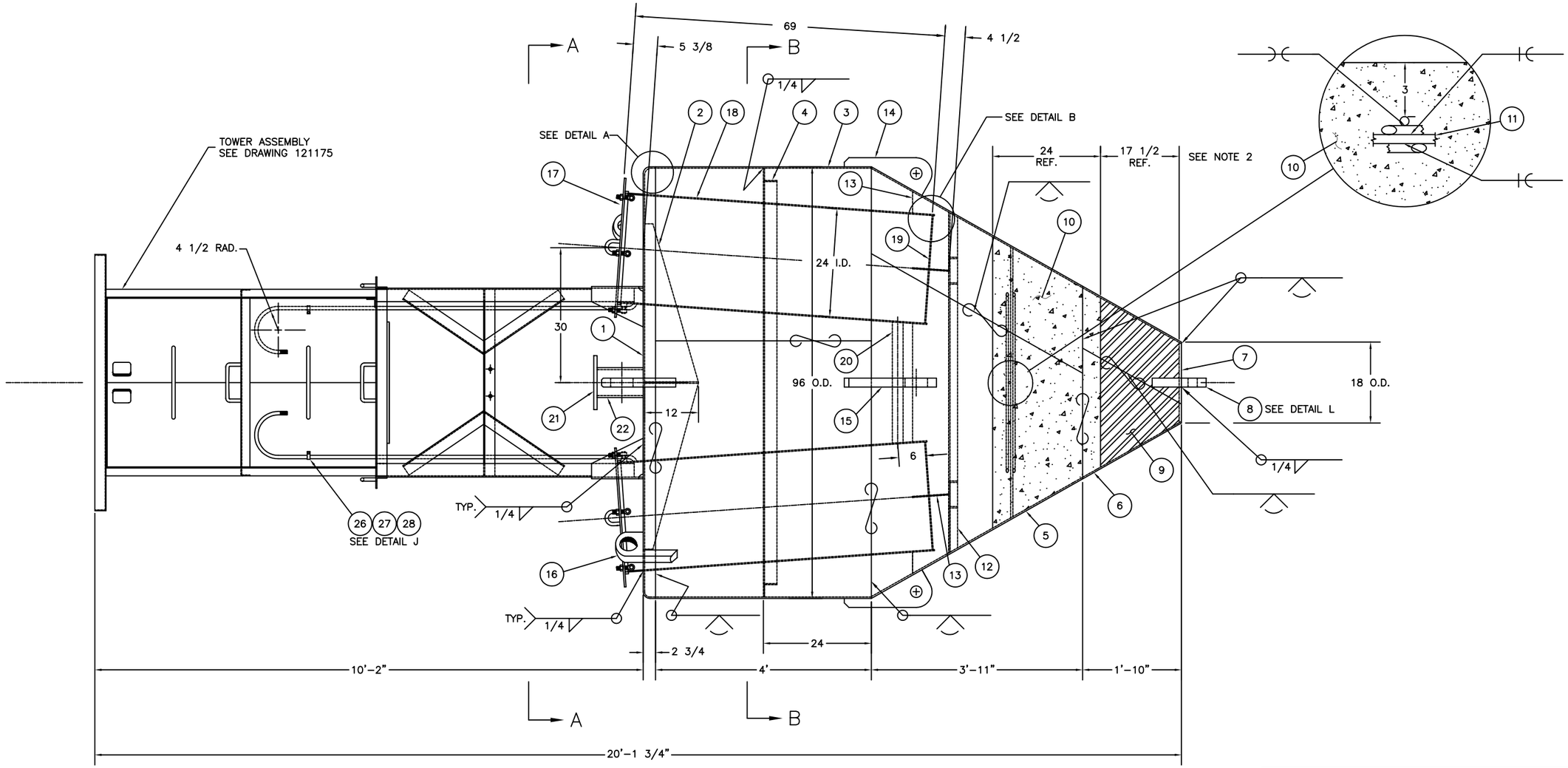

8x21 LR BUOY ASSEMBLY

SCALE: 1"=1'-0"

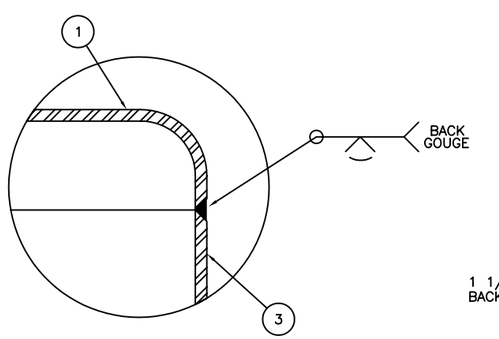

DETAIL A

SCALE: HALF

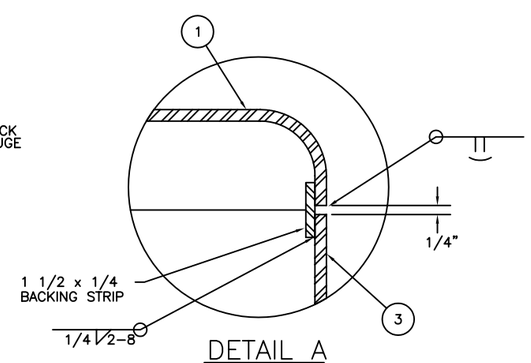

DETAIL A

SCALE: HALF

OPTIONAL

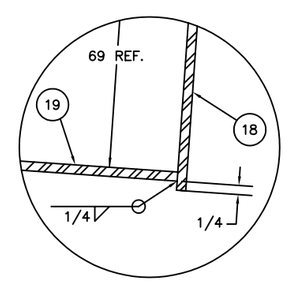

DETAIL B

SCALE: HALF

REV.	DATE	APPR.	DESCRIPTION	BY
E	6-4-99	S.W.	ADDED ADDITIONAL AIR TEST FITTING (ITEMS 23 & 24).	S.M.
D	10-1-97	S.W.	REORG DWG. DEL TOWER DETAILS. REF DRAWING 121175 FOR TWR. DEL 2 EA ITEMS 26, 27, & 28. SHORTEN ITEM 25.	S.M.
C	6-22-95	S.W.	CORRECTED BUOY DIAMETER DIMENSION ON ASSEMBLY VIEW. MOD NOTE 2. CLARIFIED WELD SYMBOLS IN DETAIL G	S.M.
B	10-26-94	S.W.	DEL ITEM 26. MOD. SECTION F-F AND QTY FOR ITEM 24.	S.M.
A	2-17-93	CAK	REORGANIZED DRAWING. MODIFIED NOTES AND NO. REQ. FOR ITEMS 6, 22, 23, 27, & 40. DELETED ITEMS 7, 21, & 41.	S.M.

DESIGNED: RT/SM
DRAWN: SM
TRACED:
CHECKED: SM
REVIEWED BY: R. M. Trainer, PROJECT ENGINEER
REVIEWED BY: S. D. Walker, G-ECV-3B
REVIEWED BY:

U.S. COAST GUARD HEADQUARTERS
CIVIL ENGINEERING

1991 TYPE
8x21 LR BUOY

APPROVED: R. J. Wells, CHIEF, OCEAN ENGINEERING BRANCH
DATE: 6/4/91

UNLESS OTHERWISE SPECIFIED:
ALL DIMENSIONS ARE IN INCHES.
TOLERANCES: DIM. ±1/8
ANG. ±1°

DRAWING NUMBER: 121145
REV. E
SCALE: AS NOTED
SHEET 1 OF 4

PLOTTING SCALE: 1"=1'-0"

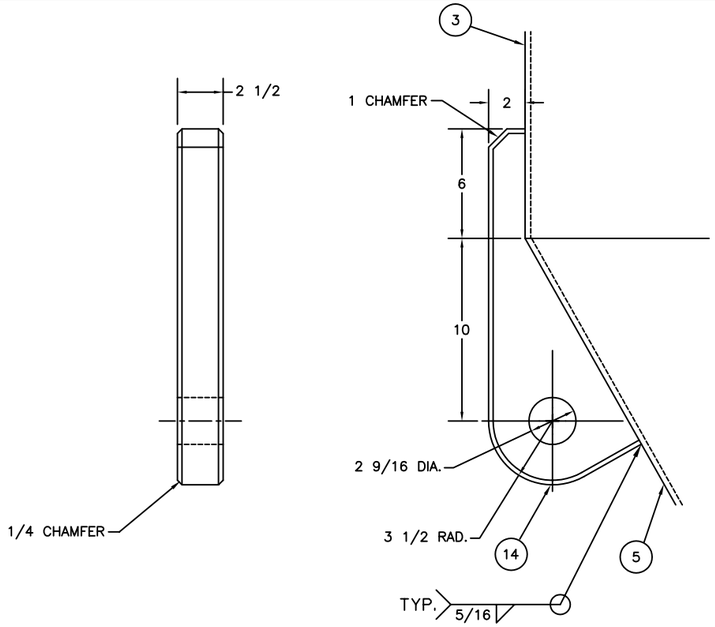

DETAIL G

SCALE: 3"=1'-0"

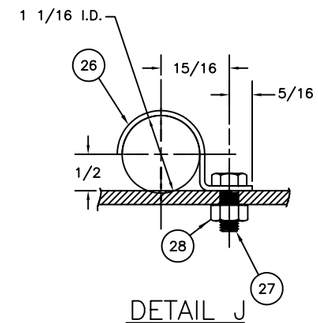

DETAIL J

SCALE: FULL

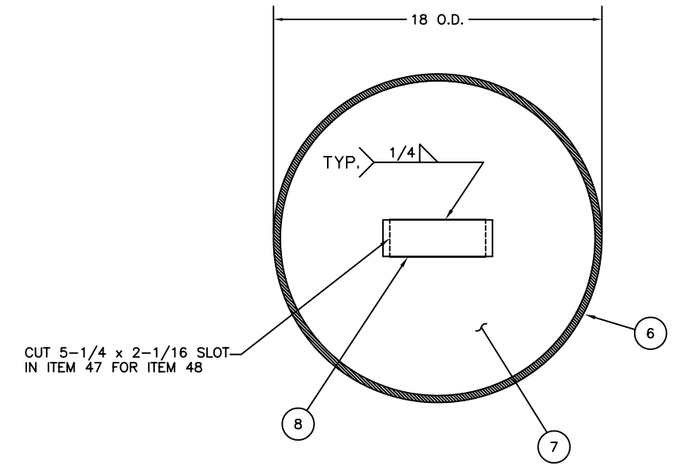

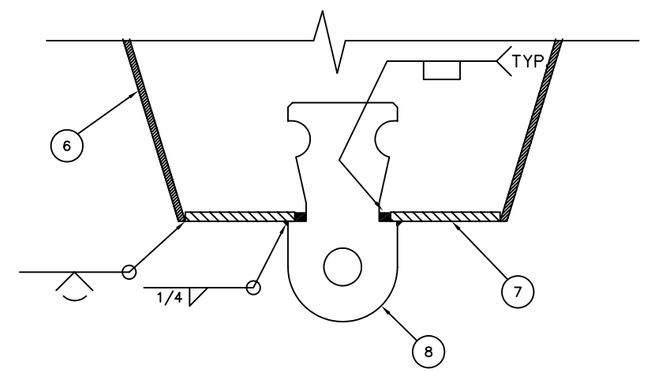

DETAIL L

SCALE: 3"=1'-0"

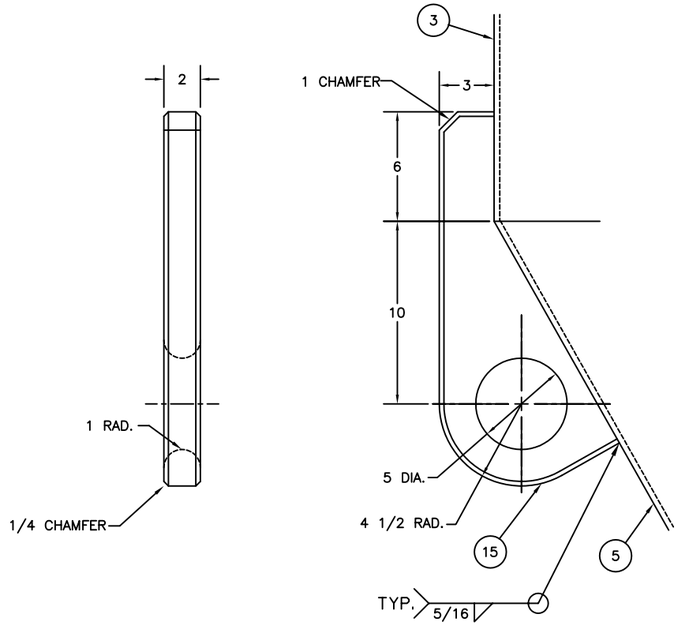

DETAIL H

SCALE: 3"=1'-0"

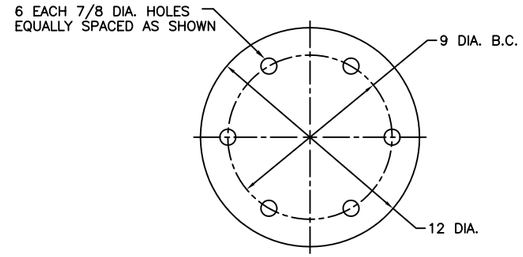

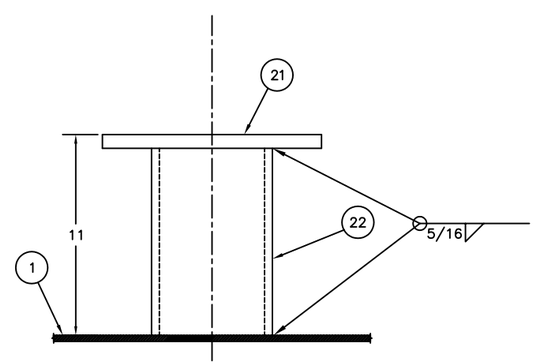

DETAIL K

SCALE: 3"=1'-0"

REV.	DATE	APPR.	DESCRIPTION	BY
E	6-4-99	S.W.	ADDED ADDITIONAL AIR TEST FITTING (ITEMS 23 & 24).	S.M.
D	10-1-97	S.W.	REORG DWG. DEL TOWER DETAILS. REF DRAWING 121175 FOR TWR. DEL 2 EA ITEMS 26, 27, & 28. SHORTEN ITEM 25.	S.M.
C	6-22-95	S.W.	CORRECTED BUOY DIAMETER DIMENSION ON ASSEMBLY VIEW. MOD NOTE 2. CLARIFIED WELD SYMBOLS IN DETAIL G	S.M.
B	10-26-94	S.W.	DEL ITEM 26. MOD. SECTION F-F AND QTY FOR ITEM 24.	S.M.
A	2-17-93	CAK	REORGANIZED DRAWING. MODIFIED NOTES AND NO. REQ. FOR ITEMS 6, 22, 23, 27, & 40. DELETED ITEMS 7, 21, & 41.	S.M.

DESIGNED: RT/SM
DRAWN: SM
TRACED:
CHECKED: SM
REVIEWED BY: R. M. Trainer
PROJECT ENGINEER
REVIEWED BY: S. D. Walker
G-ECV-3B
REVIEWED BY:

U.S. COAST GUARD HEADQUARTERS

CIVIL ENGINEERING

1991 TYPE

8x21 LR BUOY

APPROVED: R. J. Wells
CHIEF, OCEAN ENGINEERING BRANCH

DATE 6/4/91

UNLESS OTHERWISE SPECIFIED:
ALL DIMENSIONS ARE IN INCHES.
TOLERANCES: DIM. ±1/8
ANG. ±1°

DRAWING NUMBER 121145 REV. E

SCALE: AS NOTED SHEET 3 OF 4

PLOTTING SCALE: 3"=1'-0"

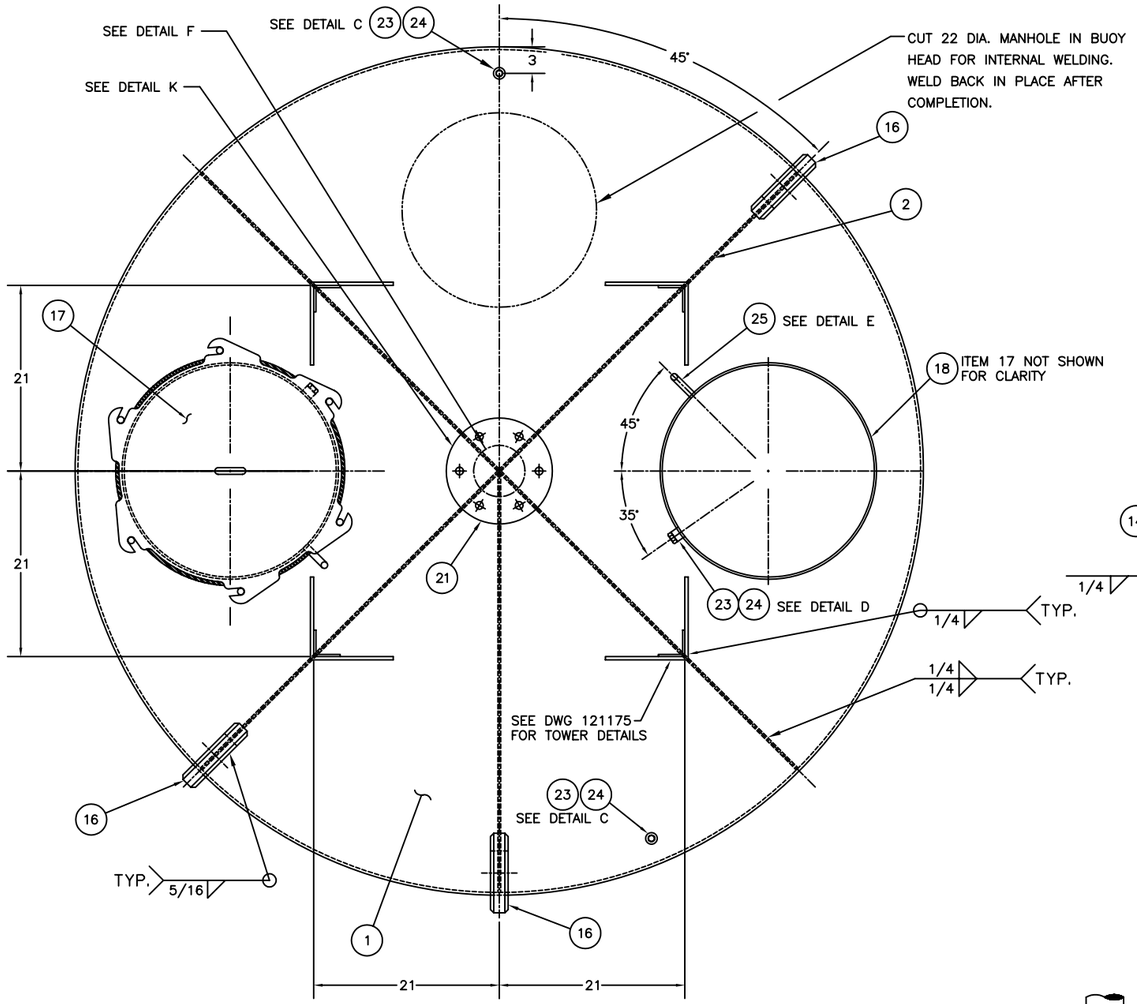

SECTION A–A

SCALE: 1 1/2"=1'–0"

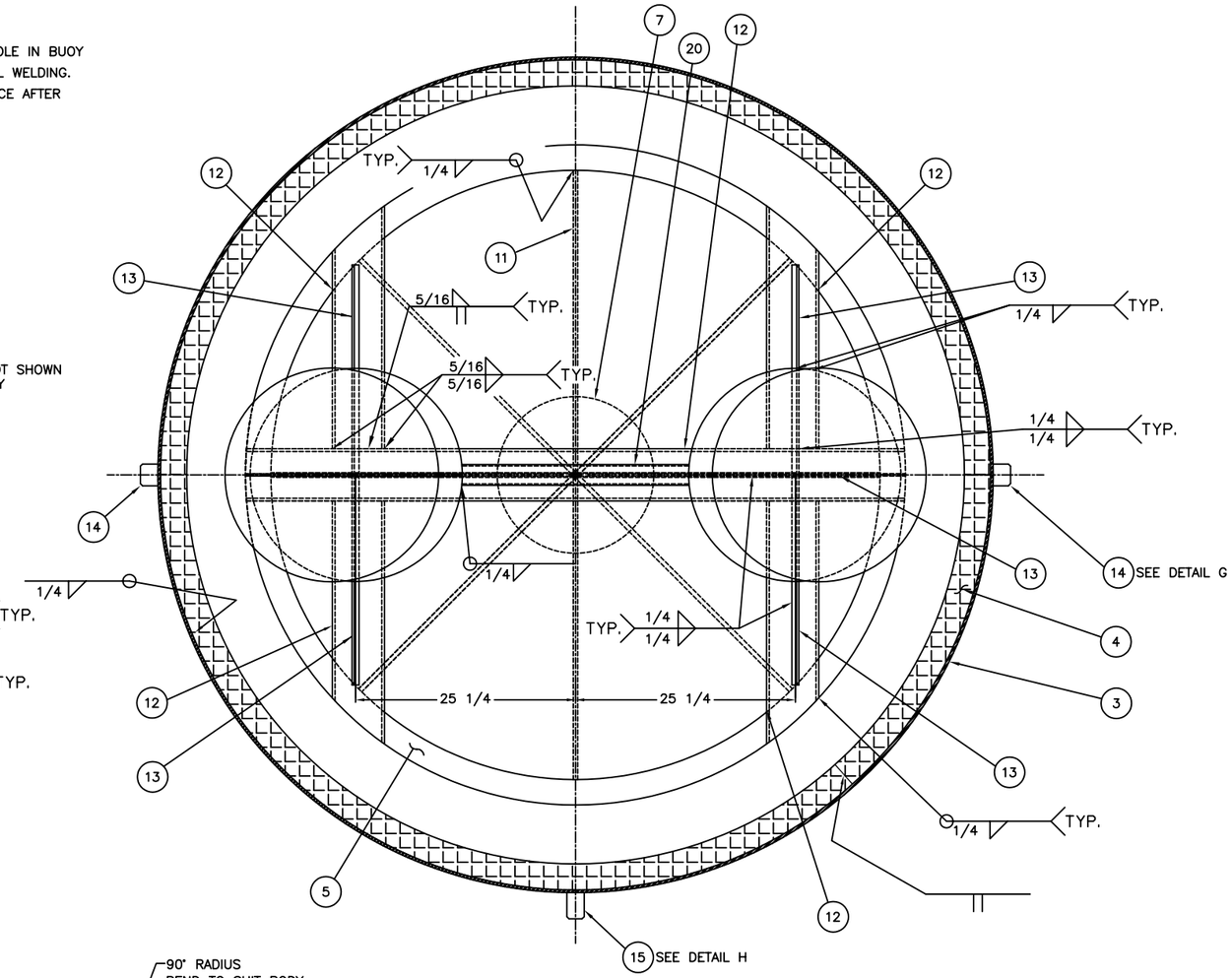

SECTION B–B

SCALE: 1 1/2"=1'–0"

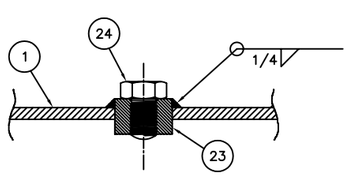

DETAIL C

SCALE: HALF

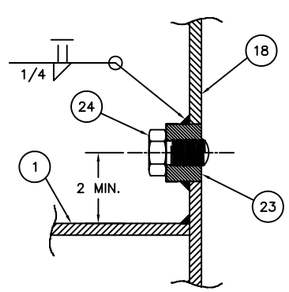

DETAIL D

SCALE: HALF

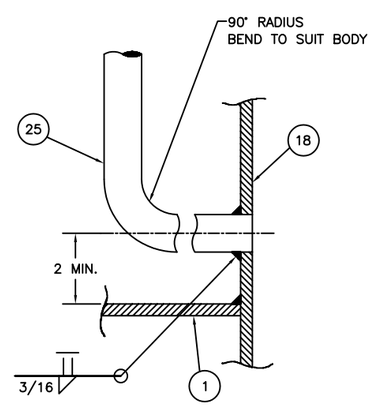

DETAIL E

SCALE: HALF

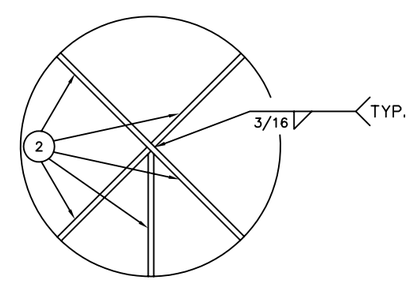

DETAIL F

SCALE: NONE

REV.	DATE	APPR.	DESCRIPTION	BY
E	6–4–99	S.W.	ADDED ADDITIONAL AIR TEST FITTING (ITEMS 23 & 24).	S.M.
D	10–1–97	S.W.	REORG DWG. DEL TOWER DETAILS. REF DRAWING 121175 FOR TWR. DEL 2 EA ITEMS 26, 27, & 28. SHORTEN ITEM 25.	S.M.
C	6–22–95	S.W.	CORRECTED BUOY DIAMETER DIMENSION ON ASSEMBLY VIEW. MOD NOTE 2. CLARIFIED WELD SYMBOLS IN DETAIL G	S.M.
B	10–26–94	S.W.	DEL ITEM 26. MOD. SECTION F–F AND QTY FOR ITEM 24.	S.M.
A	2–17–93	CAK	REORGANIZED DRAWING. MODIFIED NOTES AND NO. REQ. FOR ITEMS 6, 22, 23, 27, & 40. DELETED ITEMS 7, 21, & 41.	S.M.

DESIGNED: RT/SM
DRAWN: SM
TRACED:
CHECKED: SM
REVIEWED BY: R. M. Trainer
PROJECT ENGINEER
REVIEWED BY: S. D. Walker
G–ECV–3B
REVIEWED BY:

U.S. COAST GUARD HEADQUARTERS

CIVIL ENGINEERING

1991 TYPE
8x21 LR BUOY

APPROVED: R. J. Wells
CHIEF, OCEAN ENGINEERING BRANCH
DATE 6/4/91

UNLESS OTHERWISE SPECIFIED:
ALL DIMENSIONS ARE IN INCHES.
TOLERANCES: DIM. ±1/8
ANG. ±1°

DRAWING NUMBER 121145
REV. E
SCALE: AS NOTED
SHEET 2 OF 4

PLOTTING SCALE: 1–1/2"=1'–0"

BILL OF MATERIALS

ITEM NO.	NO. REQ.	DESCRIPTION	MATL.	REMARKS
1	1	BUOY TOP HEAD	STEEL	96 DIA. x 5/16 THK.
2	5	TOP HEAD STIFFNER	STEEL	12 x 5/16 THK.
3	1	BODY WRAPPER	STEEL	96 DIA. x 5/16 THK.
4	1	WRAPPER STIFFNER	STEEL	3 x 3 x 1/4 L
5	1	CONICAL BODY BAND (TOP)	STEEL	3/8 THK.
6	1	CONICAL BODY BAND (BOTTOM)	STEEL	3/8 THK.
7	1	BOTTOM PLATE	STEEL	17 1/4 DIA. x 1/2 THK.
8	1	BOTTOM MOORING EYE	STEEL	SEE DRAWING 121153
9	1	CAST IRON COUNTERWEIGHT	CAST IRON	2980 # SEE NOTE 2
10	1	CONCRETE COUNTERWEIGHT	CONCRETE	4050 # SEE NOTE 2
11	4	REBAR	STEEL	1/2 DIA. ASTM 706 GRADE 60
12	5	CHANNEL BRACING	STEEL	C 6 x 10.5
13	5	POCKET BRACE	STEEL	8 x 1/4 THK.
14	2	MOORING EYE	STEEL	2 1/2 THK. PLATE
15	1	BOTTOM HEAD LIFT EYE	STEEL	2 THK. PLATE
16	3	TOP HEAD LIFT EYE	STEEL	SEE DRAWING 121140
17	2	POCKET COVER ASSEMBLY	STEEL	SEE DRAWING 121143
18	2	POCKET WRAPPER	STEEL	24 I.D. x 1/4 THK.
19	2	POCKET BOTTOM PLATE	STEEL	24 DIA. x 1/4 THK.
20	1	POCKET VENT PIPE	GAL. STL.	2 SCH 40
21	1	BELL STAND PLATE	STEEL	12 DIA. x 3/4 THK.
22	1	BELL STAND	STEEL	6 SCH. 80 PIPE
23	4	HALF COUPLING	STAIN. STEEL	3/4 NPT
24	4	PIPE PLUG	STAIN. STEEL	3/4 NPT
25	2	VENT LINE	STAIN. STEEL	3/4 SCH 40
26	2	VENT PIPE CLIPS	STAIN. STEEL	5/8 x 1/16 THK.
27	2	HEX HEAD CAP SCREW	STAIN. STEEL	1/4–20UNC–5/8 LG.
28	2	HEX NUT	STAIN. STEEL	1/4–20UNC

NOTES:

1. SEE LATEST REVISION OF U.S.C.G. CIVIL ENGINEERING SPECIFICATION No. 464 FOR FABRICATION REQUIREMENTS.
2. DIMENSIONS FOR ITEMS 9 & 10 ARE FOR REFERENCE PURPOSES ONLY. THE TOATAL WEIGHT OF ITEMS 5 THRU 11 SHALL BE 8,545 LBS (+5% OR –1%).
3. TYPE 304 STAINLESS STEEL MAY BE SUBSTITUTED FOR ITEM 20.
4. ITEM 10 SHALL HAVE A 4" SLUMP WITH A SMOOTH SURFACE AND NO CAVITIES.

REV.	DATE	APPR.	DESCRIPTION	BY
E	6–4–99	S.W.	ADDED ADDITIONAL AIR TEST FITTING (ITEMS 23 & 24).	S.M.
D	10–1–97	SW	REORG DWG. DEL TOWER DETAILS. REF DRAWING 121175 FOR TWR. DEL 2 EA ITEMS 26, 27, & 28. SHORTEN ITEM 25.	S.M.
C	6–22–95	SW	CORRECTED BUOY DIAMETER DIMENSION ON ASSEMBLY VIEW. MOD NOTE 2. CLARIFIED WELD SYMBOLS IN DETAIL G	S.M.
B	10–26–94	SW	DEL ITEM 26. MOD. SECTION F–F AND QTY FOR ITEM 24.	S.M.
A	2–17–93	CAK	REORGANIZED DRAWING. MODIFIED NOTES AND NO. REQ. FOR ITEMS 6, 22, 23, 27, & 40. DELETED ITEMS 7, 21, & 41.	S.M.

DESIGNED: RT/SM
DRAWN: SM
TRACED:
CHECKED: SM
REVIEWED BY: R. M. Trainer
PROJECT ENGINEER
REVIEWED BY: S. D. Walker
G–ECV–3B
REVIEWED BY:

U.S. COAST GUARD HEADQUARTERS
CIVIL ENGINEERING

1991 TYPE 8x21 LR BUOY

APPROVED: R. J. Wells
CHIEF, OCEAN ENGINEERING BRANCH
DATE 6/4/91

UNLESS OTHERWISE SPECIFIED:
ALL DIMENSIONS ARE IN INCHES.
TOLERANCES: DIM. ±1/8
ANG. ±1°

DRAWING NUMBER 121145 REV. E
SCALE: AS NOTED SHEET 4 OF 4

PLOTTING SCALE: 12"=1'–0"