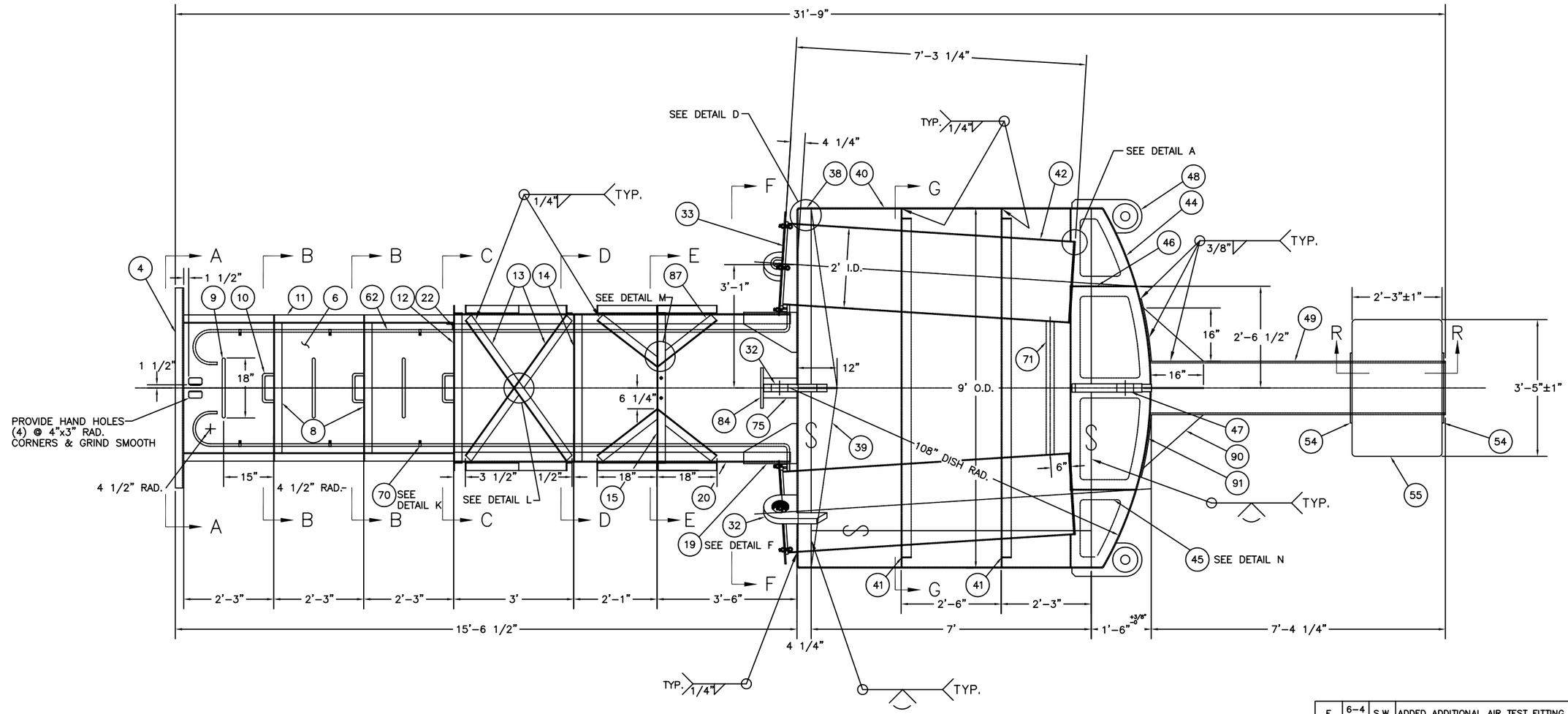

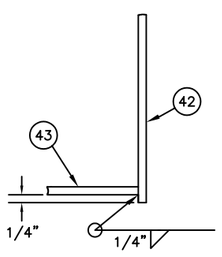

DETAIL A

SCALE: NONE

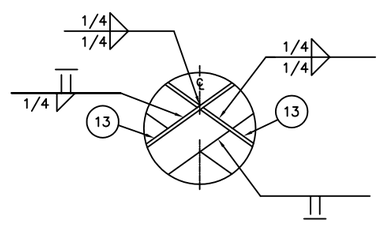

DETAIL L

SCALE: NONE

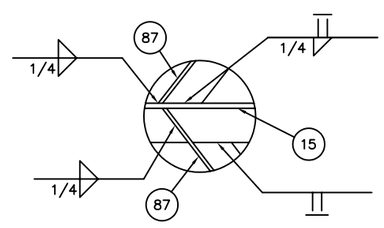

DETAIL M

SCALE: NONE

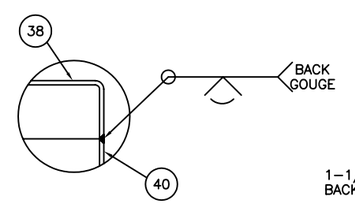

DETAIL D

SCALE: NONE

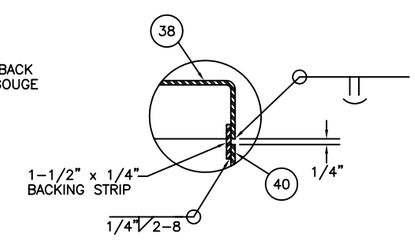

DETAIL D

SCALE: NONE
OPTIONAL

REV.	DATE	APPR.	DESCRIPTION	BY
E	6-4-99	S.W.	ADDED ADDITIONAL AIR TEST FITTING (ITEMS 64 & 66).	S.M.
D	11-14-94	SW	MODIFIED ITEMS 42, 45, & 46. MOD WELDS IN SECTION S-S & DETAIL E. DEL ITEM 66. ADDED QTY TO ITEM 3.	S.M.
C	1-25-93	CK	REORGANIZED DWG. MOD ITEM 17, MOORING EYE DIA. AND NOTES. SPECIFIED QTY REQ. FOR ITEMS 30, 31, & 70.	S.M.
C	1-25-93	CK	DELETED ITEMS 34, 36, 50, 52, 56, 65, 74, 76, 77, 78, 88, 94, 96, AND 97.	S.M.
B	6-6-91	SW	ADDED NOTE FOR ITEM 32.	S.M.
A	11-8-90	SW	MOD. ITEMS 11, 33, 34, 36, & 71. ADDED ITEMS 22 & 91. ROT. ITEM 84. DEL SHT 4 OF 6. MOD BILL OF MAT & NOTE 3.	S.M.

DESIGNED:
DRAWN: R.V.F.
TRACED: A.C.G.
CHECKED: W.E.K.
REVIEWED BY: C. A. Kohler, PROJECT ENGINEER
REVIEWED BY: S. D. Walker, G-ECV-3B
REVIEWED BY:

U.S. COAST GUARD HEADQUARTERS
CIVIL ENGINEERING

1989 TYPE 9x32 LR BUOY

APPROVED: R. J. Wells, CHIEF OF OCEAN ENGINEERING BRANCH
DATE: 10/16/89

UNLESS OTHERWISE SPECIFIED:
ALL DIMENSIONS ARE IN INCHES.
TOLERANCES: DIM. ±1/8
ANG. ±1°

DRAWING NUMBER: 121132
REV. E
SCALE: AS NOTED
SHEET 1 OF 5

PLOTTING SCALE: 3/4"=1'-0"

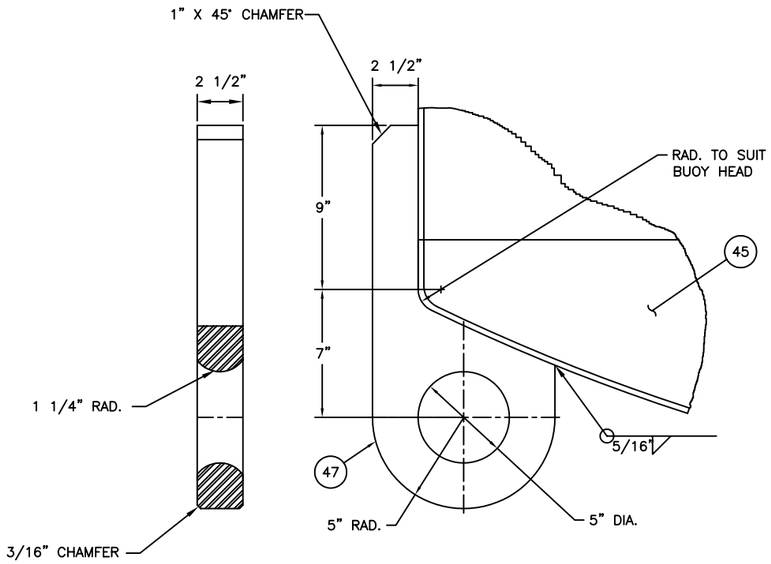

DETAIL G
(SCALE: 3"=1'-0")

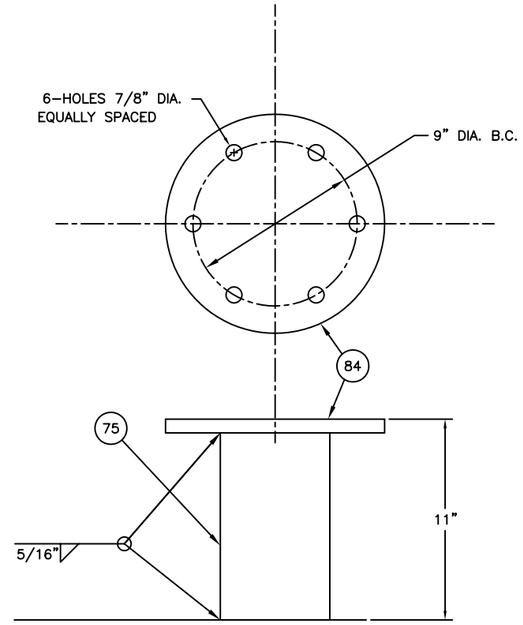

DETAIL J
(SCALE: 3"=1'-0")

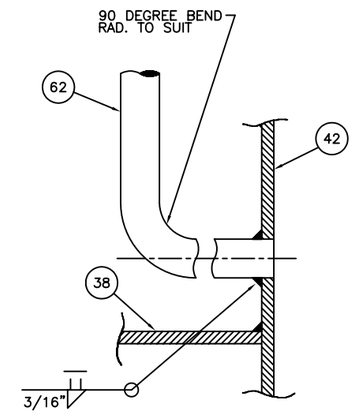

SECTION K-K
(SCALE: NONE)

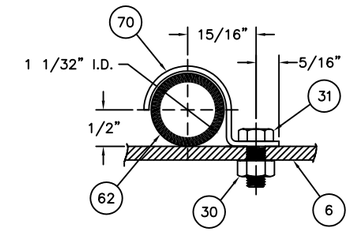

DETAIL K
(SCALE: NONE)

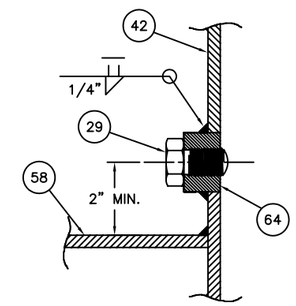

SECTION J-J
(SCALE: NONE)

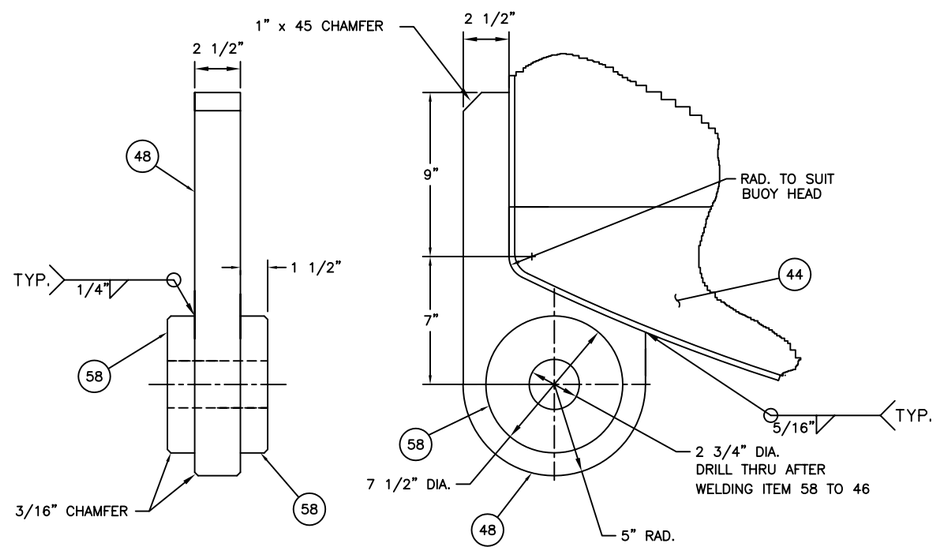

DETAIL H
(SCALE: 3"=1'-0")

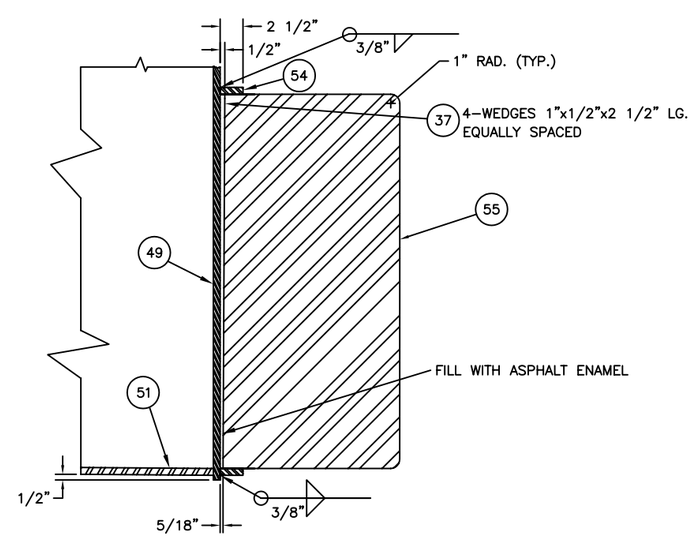

SECTION R-R
(SCALE: NONE)

REV.	DATE	APPR.	DESCRIPTION	BY
E	6-4-99	S.W.	ADDED ADDITIONAL AIR TEST FITTING (ITEMS 64 & 66).	S.M.
D	11-14-94	SW	MODIFIED ITEMS 42, 45, & 46. MOD WELDS IN SECTION S-S & DETAIL E. DEL ITEM 66. ADDED QTY TO ITEM 3.	S.M.
C	1-25-93	CAK	REORGANIZED DWG. MOD ITEM 17, MOORING EYE DIA. & NOTES. SPECIFIED QTY REQ FOR ITEMS 30, 31, & 70.	S.M.
C	1-25-93	CAK	DELETED ITEMS 34, 36, 50, 52, 56, 65, 74, 76, 77, 78, 88, 94, 96, AND 97.	S.M.
B	6-6-91	SW	MODIFIED BILL OF MATERIALS.	S.M.
A	11-9-90	SW	MODIFIED BILL OF MATERIALS AND NOTE 3.	S.M.

DESIGNED:
DRAWN: RVF
TRACED: SM
CHECKED: WEK
REVIEWED BY: C. A. Kohler
PROJECT ENGINEER
REVIEWED BY: S. D. Walker
G-ECV-3B
REVIEWED BY:

U.S. COAST GUARD HEADQUARTERS
CIVIL ENGINEERING

1989 TYPE 9x32 LR BUOY

APPROVED: R. J. Wells
CHIEF, OCEAN ENGINEERING BRANCH
DATE 10/16/89

UNLESS OTHERWISE SPECIFIED:
ALL DIMENSIONS ARE IN INCHES.
TOLERANCES: DIM. ±1/8
ANG. ±1°

DRAWING NUMBER 121132 REV. E
SCALE: AS NOTED SHEET 4 OF 5

PLOTTING SCALE: 3"=1'-0"

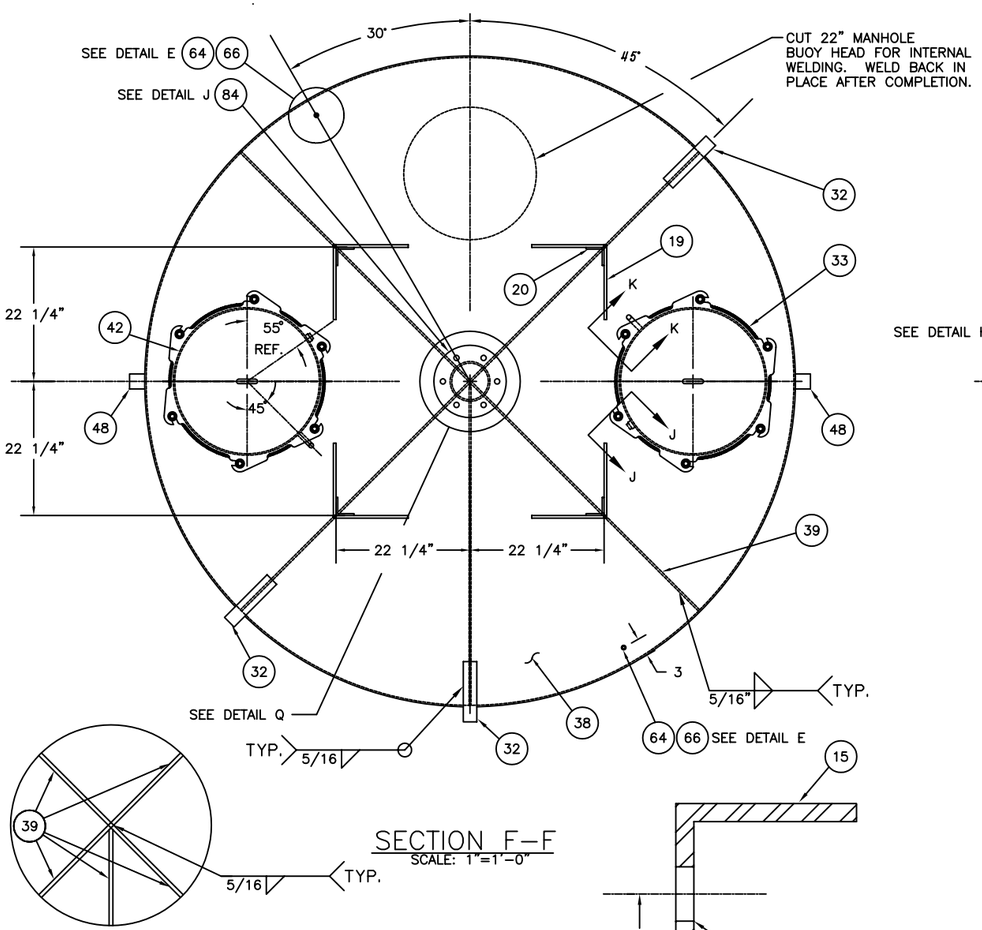

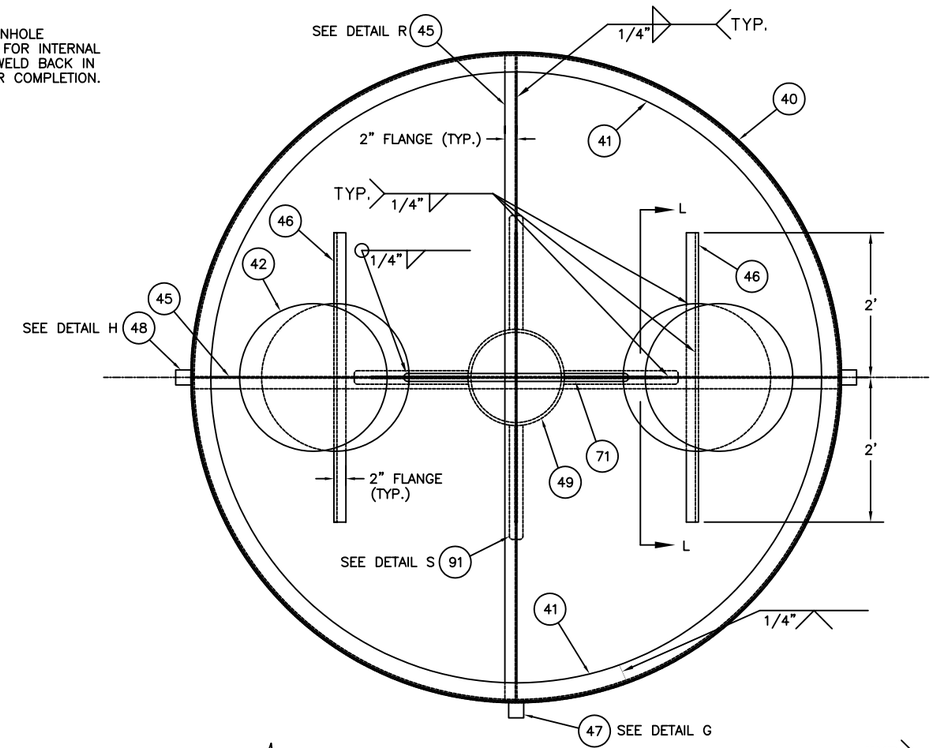

SECTION G–G
SCALE: 1"=1'–0"

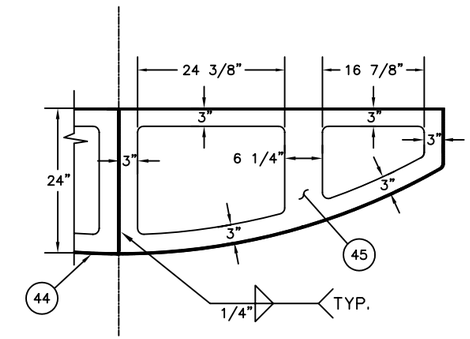

DETAIL R
SCALE: 1"=1'–0"

DETAIL Q
SCALE: NONE

SECTION F–F
SCALE: 1"=1'–0"

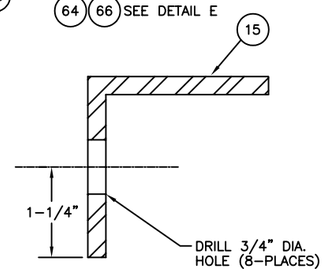

SECTION M–M
SCALE: FULL

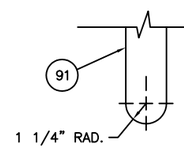

DETAIL S
SCALE: 3"=1'–0"

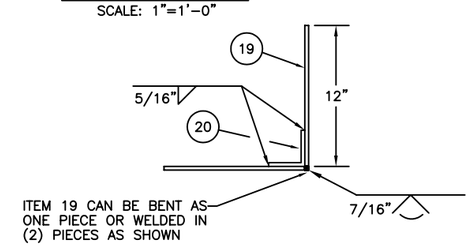

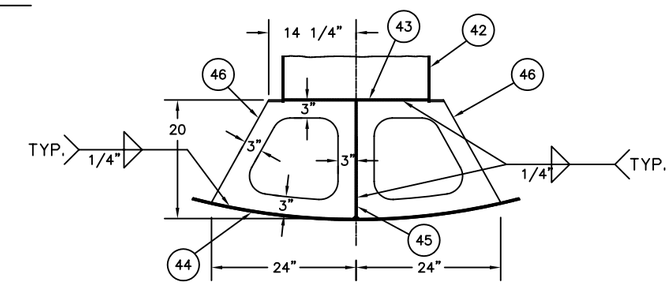

SECTION L–L
SCALE: 1"=1'–0"

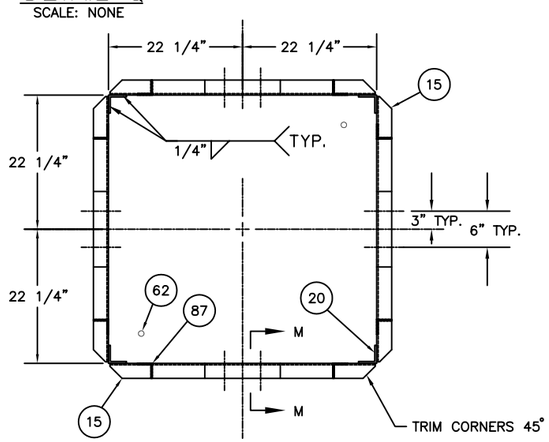

SECTION E–E
SCALE: 1"=1'–0"

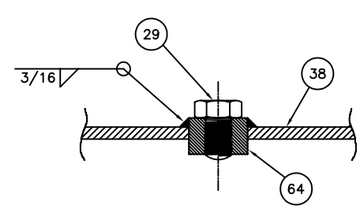

DETAIL E
SCALE: NONE

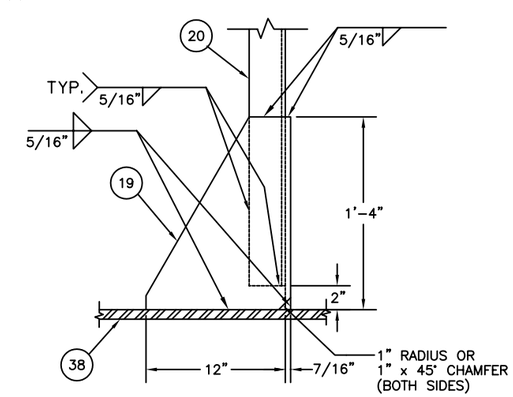

DETAIL F
SCALE: NONE

REV.	DATE	APPR.	DESCRIPTION	BY
E	6–4 –99	S.W.	ADDED ADDITIONAL AIR TEST FITTING (ITEMS 64 & 66).	S.M.
D	11–14 –94	SW	MODIFIED ITEMS 42, 45, & 46. MOD WELDS IN SECTION S–S & DETAIL E. DEL ITEM 66. ADDED QTY TO ITEM 3.	S.M.
C	1–25 –93	CAK	REORGANIZED DWG. MOD ITEM 17, MOORING EYE DIA. & NOTES. SPECIFIED QTY REQ FOR ITEMS 30, 31, & 70.	S.M.
C	1–25 –93	CAK	DELETED ITEMS 34, 36, 50, 52, 56, 65, 74, 76, 77, 78, 88, 94, 96, AND 97.	S.M.
B	6–6 –91	SW	MODIFIED BILL OF MATERIALS.	S.M.
A	11–9 –90	SW	MODIFIED BILL OF MATERIALS AND NOTE 3.	S.M.

DESIGNED:
DRAWN: RVF
TRACED: SM
CHECKED: WEK
REVIEWED BY: C. A. Kohler PROJECT ENGINEER
REVIEWED BY: S. D. Walker G-ECV-3B
REVIEWED BY:

U.S. COAST GUARD HEADQUARTERS
CIVIL ENGINEERING

1989 TYPE
9x32 LR BUOY

APPROVED: R. J. Wells
CHIEF, OCEAN ENGINEERING BRANCH
DATE 10/16/89

UNLESS OTHERWISE SPECIFIED:
ALL DIMENSIONS ARE IN INCHES.
TOLERANCES: DIM. ±1/8
ANG. ±1°

DRAWING NUMBER 121132
REV. E
SCALE: AS NOTED
SHEET 3 OF 5

PLOTTING SCALE: 1"=1'–0"

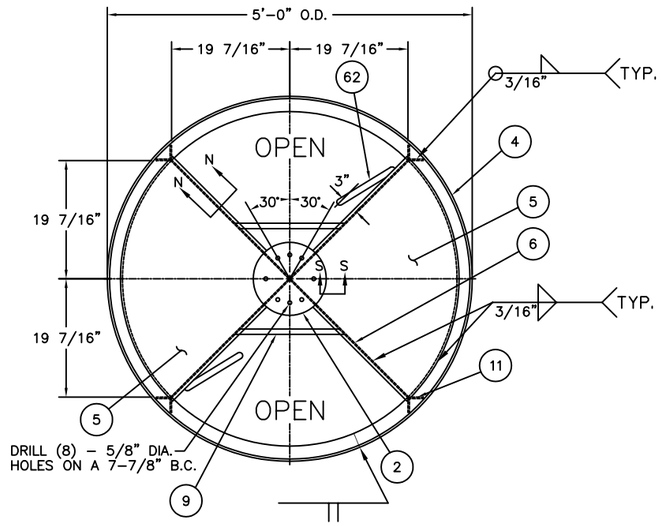

SECTION A–A

SCALE: 1"=1'-0"

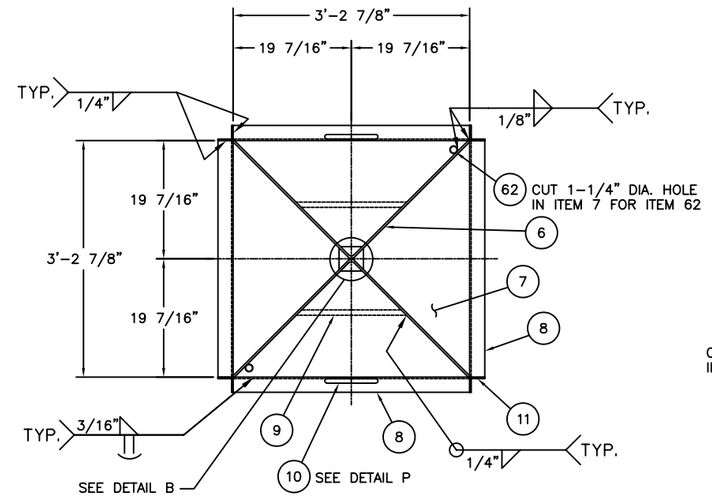

SECTION B–B

SCALE: 1"=1'-0"

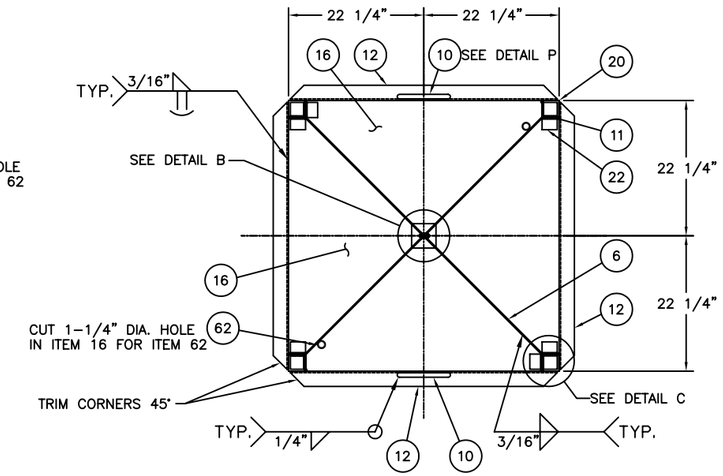

SECTION C–C

SCALE: 1"=1'-0"

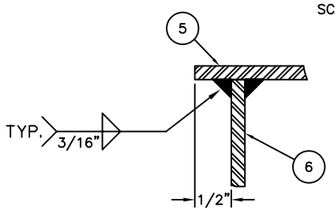

SECTION N–N

SCALE: FULL

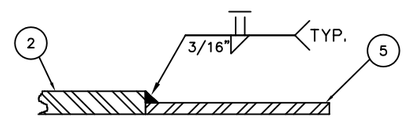

SECTION S–S

SCALE: NONE

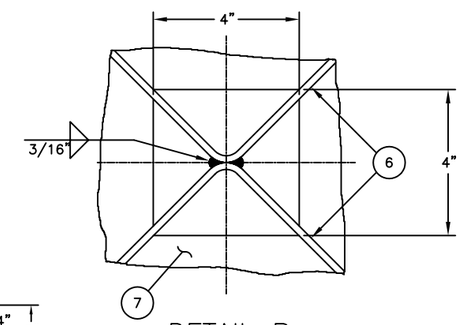

DETAIL B

SCALE: HALF

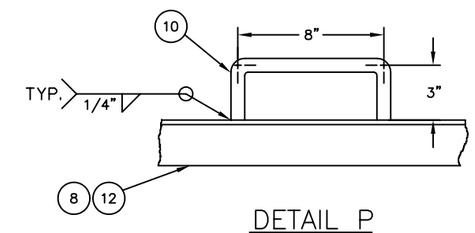

DETAIL P

SCALE: 3"=1'-0"

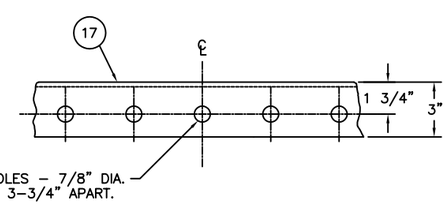

SECTION P–P

SCALE: 3"=1'-0"

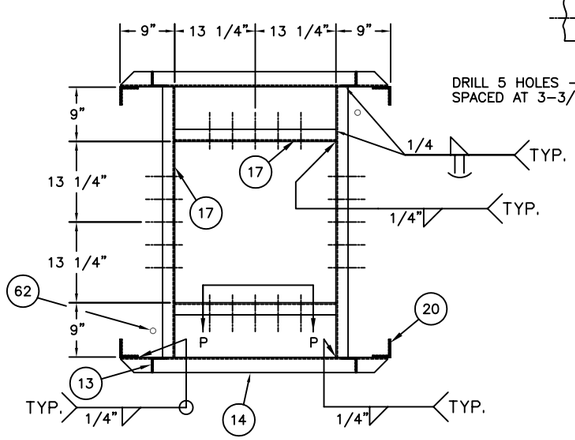

SECTION D–D

SCALE: 1"=1'-0"

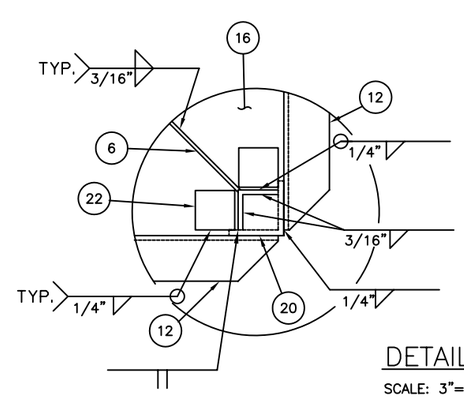

DETAIL C

SCALE: 3"=1'-0"

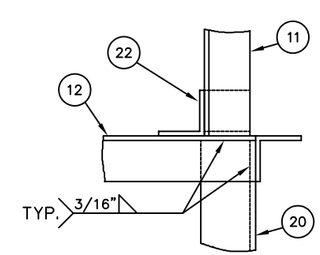

REV.	DATE	APPR.	DESCRIPTION	BY
E	6-4-99	S.W.	ADDED ADDITIONAL AIR TEST FITTING (ITEMS 64 & 66).	S.M.
D	11-14-94	SW	MODIFIED ITEMS 42, 45, & 46. MOD WELDS IN SECTION S–S & DETAIL E. DEL ITEM 66. ADDED QTY TO ITEM 29.	S.M.
C	1-25-93	CAK	REORGANIZED DWG. MOD ITEM 17, MOORING EYE DIA. & NOTES. SPECIFIED QTY REQ FOR ITEMS 30, 31, & 70.	S.M.
C	1-25-93	CAK	DELETED ITEMS 34, 36, 50, 52, 56, 65, 74, 76, 77, 78, 88, 94, 96, AND 97.	S.M.
B	6-6-91	SW	MODIFIED BILL OF MATERIALS.	S.M.
A	11-9-90	SW	MODIFIED BILL OF MATERIALS AND NOTE 3.	S.M.

DESIGNED:
DRAWN: RVF
TRACED: SM
CHECKED: WEK
REVIEWED BY: C. A. Kohler
PROJECT ENGINEER
REVIEWED BY: S. D. Walker
G-ECV-3B
REVIEWED BY:

U.S. COAST GUARD HEADQUARTERS

CIVIL ENGINEERING

1989 TYPE

9x32 LR BUOY

APPROVED: R. J. Wells
CHIEF, OCEAN ENGINEERING BRANCH

DATE 10/16/89

UNLESS OTHERWISE SPECIFIED:
ALL DIMENSIONS ARE IN INCHES.
TOLERANCES: DIM. ±1/8
ANG. ±1°

DRAWING NUMBER 121132 REV. E

SCALE: AS NOTED SHEET 2 OF 5

PLOTTING SCALE: 1"=1'-0"

BILL OF MATERIALS

ITEM NO.	NO. REQ.	DESCRIPTION	MATL.	REMARKS
2	1	LANTERN BASE PLATE	STEEL	12" DIA. x 3/8" THK.
4	1	LANTERN RING	STEEL	2 1/2" x 2 1/2" x 3/8" L
5	2	TOP REFLECTOR PLATE	STEEL	3/16" THK.
6	2	VERTICAL REFLECTOR PLATE	STEEL	3/16" THK.
7	8	HORIZONTAL REFLECTOR PLATE	STEEL	3/16" THK.
8	8	REFLECTOR STRUT	STEEL	2 1/2" x 2 1/2" x 1/4" L
9	6	REFLECTOR STEP	STEEL	7/8" DIA. x 18" LG.
10	6	REFLECTOR GRAB BAR	STEEL	3/4" DIA.
11	4	REFLECTOR LEG	STEEL	2 1/2" x 2 1/2" x 1/4" L
12	4	TOWER TOP STRUT	STEEL	2 1/2" x 2 1/2" x 1/4" L
13	12	TOWER DIAGONALS	STEEL	2 1/2" x 2 1/2" x 1/4" L
14	2	TOWER STRUT	STEEL	2 1/2" x 2 1/2" x 1/4" L
15	4	TOWER STRUT	STEEL	2 1/2" x 2 1/2" x 1/4" L
16	1	HORIZONTAL REFLECTOR	STEEL	3/16" THK.
17	4	TAPPER SUPPORTS	STEEL	3" x 2" x 1/4" L
19	4	TOWER FOOT	STEEL	7/16" THK.
20	4	TOWER LEG	STEEL	3" x 3" x 5/16" L
22	6	ANGLE CLIPS	STEEL	2" x 2" x 1/4" L
29	3	PIPE PLUG	STAIN. STEEL	3/4" I.P.S.
30	6	HEX HEAD NUT	STAIN. STEEL	1/4"-20UNC
31	6	HEX HEAD CAP SCREW	STAIN. STEEL	1/4"-20UNC-5/8" LG.
32	3	TOP HEAD LIFT EYE	STEEL	SEE DRAWING 121140
33	2	BATTERY POCKET COVER ASSEM.	STEEL	SEE DRAWING 121143
37	4	WEDGES	STEEL	1" x 1/2" x 2 1/2" LG.
38	1	TOP HEAD	STEEL	9'-0" O.D. x 5/16" THK.
39	5	TOP HEAD STIFFENERS	STEEL	12" x 53 5/8" x 5/16" THK.
40	1	BUOY WRAPPER	STEEL	9'-0" O.D. x 5/16" THK.
41	2	WRAPPER STIFFENER	STEEL	3" x 3" x 1/4" L
42	2	BATTERY POCKET WRAPPER	STEEL	24" I.D. x 1/4" THK.
43	2	BATTERY POCKET BOTTOM	STEEL	24" DIA. x 1/4" THK.
44	1	BOTTOM HEAD	STEEL	9'-0" O.D. x 5/16" THK.
45	2	BOTTOM HEAD STIFFENER	STEEL	24" x 1/4" THK.
46	4	POCKET SUPPORTS	STEEL	24" x 20" x 1/4" THK.
47	1	BOTTOM LIFTING EYE	STEEL	2 1/2" THK. PLATE
48	2	MOORING EYE	STEEL	2 1/2" THK. PLATE
49	1	COUNTERWEIGHT TUBE	STEEL	16" O.D. x 1/2" THK.
51	1	CTWT TUBE BOTTOM PLATE	STEEL	15" DIA. x 1/2" THK.

BILL OF MATERIALS

ITEM NO.	NO. REQ.	DESCRIPTION	MATL.	REMARKS
54	2	COUNTERWEIGHT RING	STEEL	16" I.D. x 21" O.D. x 1/2" THK.
55	1	COUNTERWEIGHT	CAST IRON	SEE NOTE 2
58	4	MOORING EYE BOSS	STEEL	7 1/2" DIA. x 1 1/2" THK.
62	2	VENT LINE	STAIN. STEEL	3/4" SCH. 40 PIPE
64	4	THREADED HALF COUPLING	STAIN. STEEL	3/4 NPT
66	4	PIPE PLUG	STAIN. STEEL	3/4 NPT
70	6	VENT PIPE CLIP	STAIN. STEEL	5/8" x 1/16" THK.
71	1	BOTTOM VENT PIPE	GALV. STEEL	2" SCH. 40 PIPE
75	1	BELL & GONG SUPPORT PIPE	STEEL	6" SCH. 80 PIPE
84	1	BELL & GONG SUPPORT PLATE.	STEEL	12" DIA. x 3/4" THK.
87	16	TOWER BRACES	STEEL	2 1/2" x 2 1/2" x 1/4" L
90	4	COUNTERWEIGHT GUSSETS	STEEL	16" x 3/8" THK.
91	4	DOUBLER PLATE	STEEL	19" x 2 1/4" x 3/8 THK.

NOTES:

1. SEE LATEST REVISION OF U.S.C.G. CIVIL ENGINEERING SPECIFICATION No. 464 FOR FABRICATION REQUIREMENTS.
2. THE TOTAL WEIGHT OF ITEM 55 SHALL BE 7,727 LBS. (+5% OR −1%).
3. TYPE 304 STAINLESS STEEL MAY BE SUBSTITUTED FOR ITEM 71.

REV.	DATE	APPR.	DESCRIPTION	BY
E	6-4-99	S.W.	ADDED ADDITIONAL AIR TEST FITTING (ITEMS 64 & 66).	S.M.
D	11-14-94	SW	MODIFIED ITEMS 42, 45, & 46. MOD WELDS IN SECTION S-S & DETAIL E. DEL ITEM 66. ADDED QTY TO ITEM 3.	S.M.
C	1-25-93	CAK	REORGANIZED DWG. MOD ITEM 17, MOORING EYE DIA. & NOTES. SPECIFIED QTY REQ FOR ITEMS 30, 31, & 70.	S.M.
C	1-25-93	CAK	DELETED ITEMS 34, 36, 50, 52, 56, 65, 74, 76, 77, 78, 88, 94, 96, AND 97.	S.M.
B	6-6-91	SW	MODIFIED BILL OF MATERIALS.	S.M.
A	11-9-90	SW	MODIFIED BILL OF MATERIALS AND NOTE 3.	S.M.

DESIGNED:
DRAWN: RVF
TRACED: SM
CHECKED: WEK
REVIEWED BY: C. A. Kohler
PROJECT ENGINEER
REVIEWED BY: S. D. Walker
G-ECV-3B
REVIEWED BY:

U.S. COAST GUARD HEADQUARTERS
CIVIL ENGINEERING

1989 TYPE 9x32 LR BUOY

APPROVED: R. J. Wells
CHIEF, OCEAN ENGINEERING BRANCH
DATE 10/16/89

UNLESS OTHERWISE SPECIFIED:
ALL DIMENSIONS ARE IN INCHES.
TOLERANCES: DIM. ±1/8
ANG. ±1°

DRAWING NUMBER 121132 REV. E
SCALE: AS NOTED SHEET 5 OF 5

PLOTTING SCALE: 12"=1'-0"