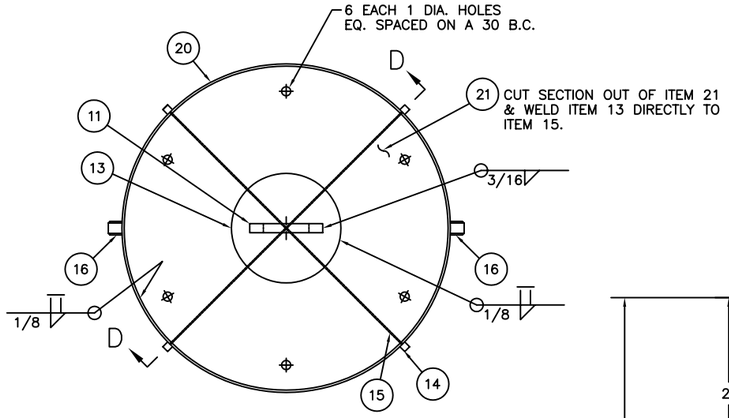

SECTION A–A

SCALE: 1–1/2"=1'–0"

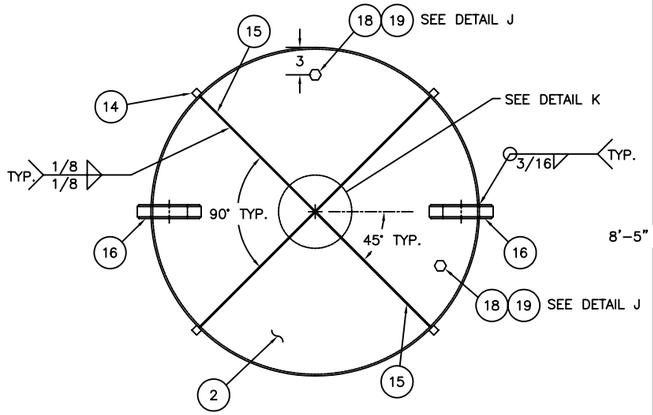

SECTION B–B

SCALE: 1–1/2"=1'–0"

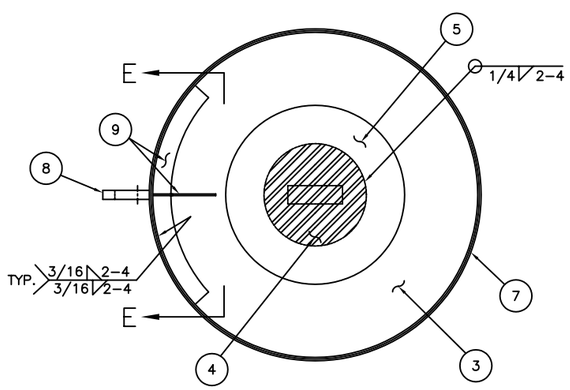

SECTION C–C

SCALE: 1–1/2"=1'–0"

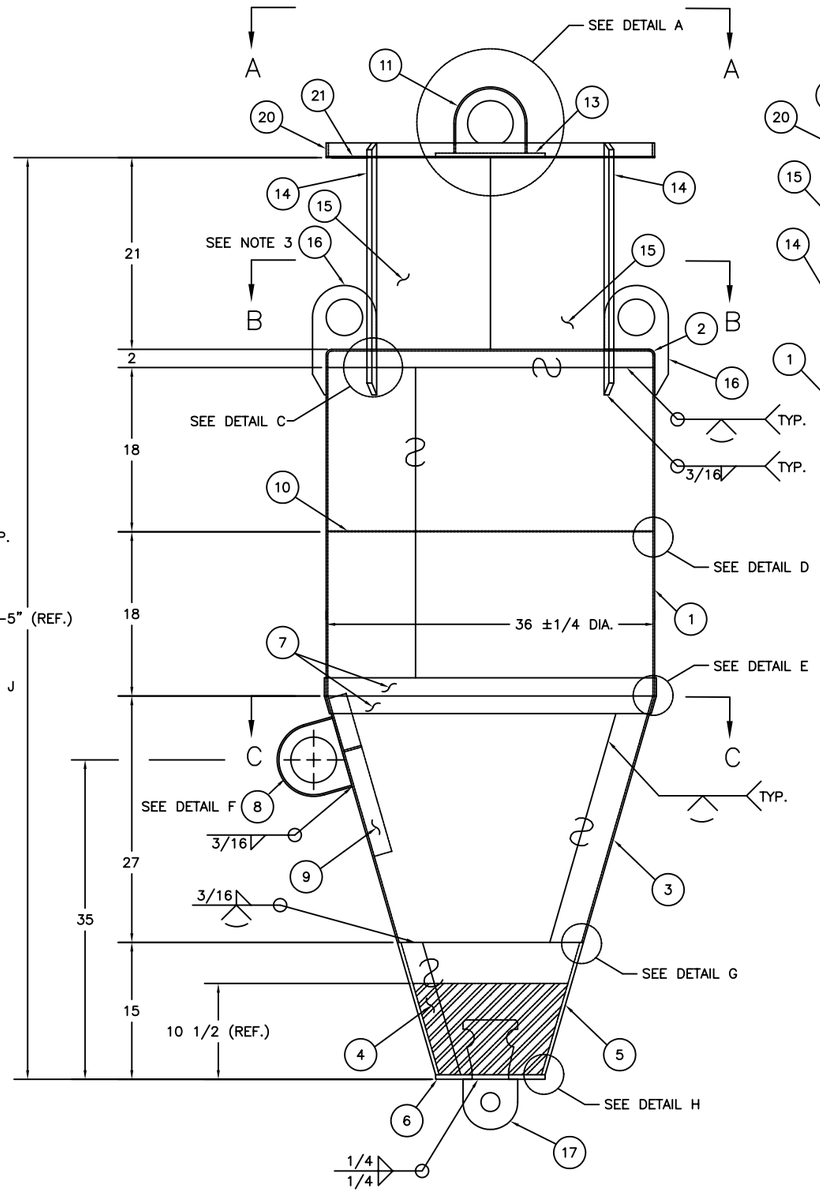

3CR

SCALE: 1–1/2"=1'–0"

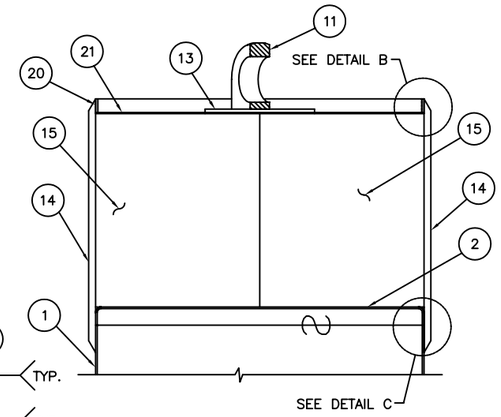

SECTION D–D

SCALE: 1–1/2"=1'–0"

BILL OF MATERIALS

ITEM NO.	NO. REQ.	DESCRIPTION	MATL.	REMARKS
1	1	BODY WRAPPER	STEEL	3/16 THK.
2	1	FLANGED HEAD	STEEL	36 O.D. x 3/16 THK.
3	1	CONICAL WRAPPER	STEEL	3/16 THK.
4	1	COUNTERWEIGHT	CAST IRON	SEE NOTE 2
5	1	COUNTERWEIGHT WRAPPER	STEEL	3/8 THK.
6	1	COUNTERWEIGHT PLATE	STEEL	12 DIA. x 1/2 THK.
7	2	DOUBLER STRIP	STEEL	3/16 THK. x 2 WD.
8	1	SIDE LIFT EYE	STEEL	1 THK.
9	3	SIDE LIFT EYE STIFFENER	STEEL	3/16 THK. x 2 WD.
10	1	WRAPPER STIFFENER	STEEL	3/16 THK. x 2 WD.
11	1	TOP LIFT EYE	STEEL	1 THK.
12				
13	1	TOP LIFT EYE PLATE	STEEL	12 DIA. x 1/2 THK.
14	4	VERTICAL REFLECTOR BAR	STEEL	3/4 SQ.
15	2	VERTICAL RADAR REFLECTOR	STEEL	1/8 THK.
16	2	TOP HEAD LIFT EYE	STEEL	SEE DRAWING 121140
17	1	MOORING EYE	STEEL	SEE DRAWING 121153
18	2	HALF COUPLING	STAIN. STEEL	3/4 NPT
19	2	PIPE PLUG	STAIN. STEEL	3/4 NPT
20	1	GUANO RING	STEEL	1/4 THK x 1–1/2 WD
21	1	HORIZONTAL RADAR REFLECTOR	STEEL	1/8 THK.

NOTES:

1. SEE LATEST REVISION OF U.S.C.G. CIVIL ENGINEERING SPECIFICATION No. 464 FOR FABRICATION REQUIREMENTS.
2. THE TOTAL WEIGHT OF ITEMS 4, 5, 6, AND 17 SHALL BE 510 LBS. (+5%, –1%).
3. THE TOP HEAD LIFT EYE (ITEM 16) DIRECTLY ABOVE THE SIDE LIFT EYE (ITEM 8), SHALL HAVE THE WORD "LIFT" WELDED ON IT.

REV.	DATE	APPR.	DESCRIPTION	BY
F	6–4 –99	S.W.	ADDED ADDITIONAL AIR TEST FITTING (ITEMS 18 & 19).	S.M.
E	2–7 –97	SW	REORGANIZED THE DWG. DEL ITEM 12 & 22. MOD ITEMS 15, 21, AND WELDS ON RADAR REFLECTOR ASSEMBLY.	S.M.
D	11–1 –94	SW	ADDED DET 10. MOD WELDS IN DET 2, 4, & 5. MOD THK OF ITEMS 8, 11, & 22. ADDED INNER CHAMFER TO ITEMS 8 & 11.	S.M.
C	12–11 –92	WD	MODIFIED NOTES 2, 3, AND ITEMS 4, 11, 18, & 19. ADDED ADDITIONAL ITEM 16 AND NOTE 5. RELOCATED ITEMS 8 & 9.	S.M.
B	11–7 –91	SW	MODIFIED NOTE 3.	S.M.
A	2–22 –91	SW	REDRAWN USING AUTOCAD. MODIFIED NOTE 2 AND BILL OF MATERIALS. DELETED NOTE 5 AND DETAIL 11.	ANP

DESIGNED: R.B.
DRAWN: W.D.
TRACED: S.M.
CHECKED: R.B.
REVIEWED BY: R. Boy
PROJECT ENGINEER
REVIEWED BY: S.D. Walker
G–ECV–3B
REVIEWED BY:

U.S. COAST GUARD HEADQUARTERS

CIVIL ENGINEERING

1988 TYPE THIRD CLASS CAN BUOY (3CR)

APPROVED: James D. Garrison
CHIEF, OCEAN ENGINEERING BRANCH

DATE: 9 Feb 88

UNLESS OTHERWISE SPECIFIED:
ALL DIMENSIONS ARE IN INCHES.
TOLERANCES: DIM. ±1/8
ANG. ?°

DRAWING NUMBER: 121113 REV. F

SCALE: AS NOTED SHEET 1 OF 2

PLOTTING SCALE: 1–1/2"=1'–0"

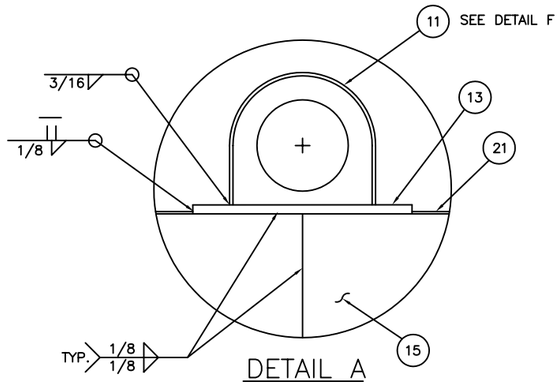

DETAIL A
SCALE: 3"=1'-0"

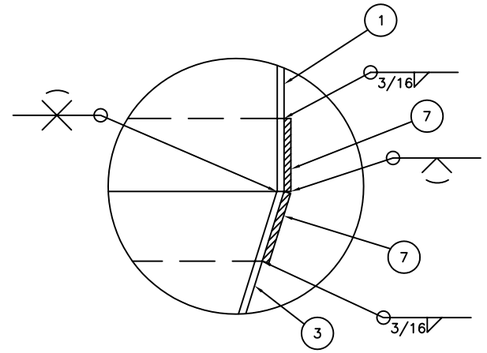

DETAIL E
SCALE: HALF

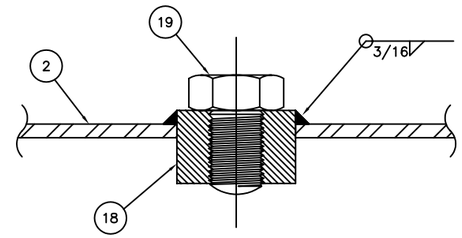

DETAIL J
SCALE: FULL

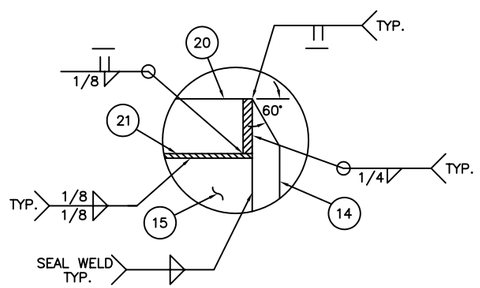

DETAIL B
SCALE: HALF

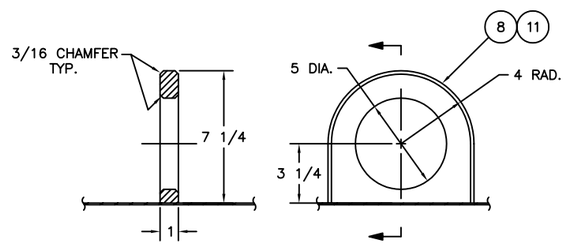

DETAIL F
SCALE: 3"=1'-0"

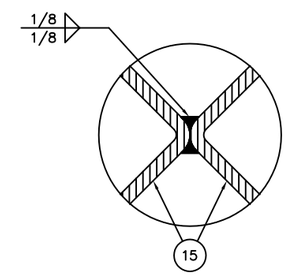

DETAIL K
SCALE: FULL

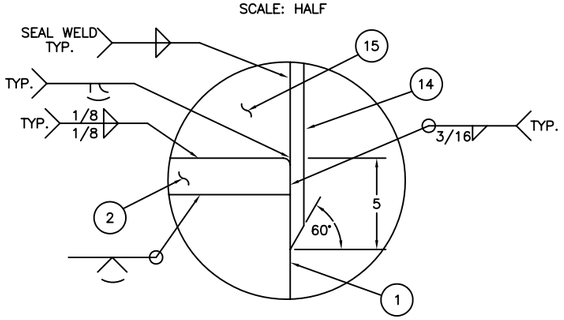

DETAIL C
SCALE: 3"=1'-0"

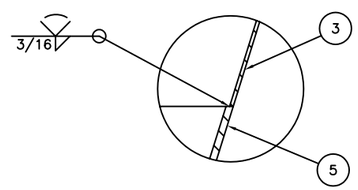

DETAIL G
SCALE: 3"=1'-0"

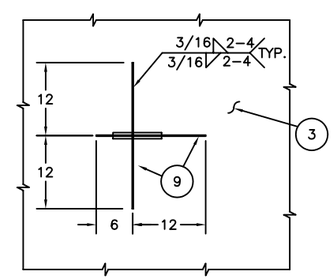

SECTION E-E
SCALE: 1"=1'-0"

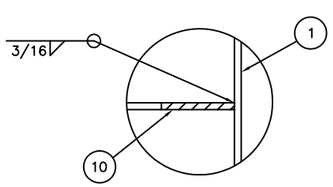

DETAIL D
SCALE: HALF

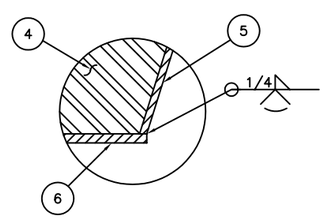

DETAIL H
SCALE: 3"=1'-0"

REV.	DATE	APPR.	DESCRIPTION	BY
F	6-4-99	S.W.	ADDED ADDITIONAL AIR TEST FITTING (ITEMS 18 & 19).	S.M.
E	2-7-97	SW	REORGANIZED THE DWG. DEL ITEM 12 & 22. MOD ITEMS 15, 21, AND WELDS ON RADAR REFLECTOR ASSEMBLY.	S.M.
D	11-1-94	SW	ADDED DET 10. MOD WELDS IN DET 2, 4, & 5. MOD THK OF ITEMS 8, 11, & 22. ADDED INNER CHAMFER TO ITEMS 8 & 11.	S.M.
C	12-11-92	WD	MODIFIED NOTES 2, 3, AND ITEMS 4, 11, 18, & 19. ADDED ADDITIONAL ITEM 16 & NOTE 5. RELOCATED ITEMS 8 & 9.	S.M.
B	11-7-91	SW	MODIFIED NOTE 3.	S.M.
A	2-22-91	SW	REDRAWN USING AUTOCAD. MODIFIED NOTE 2 AND BILL OF MATERIALS. DELETED NOTE 5 AND DETAIL 11.	S.M.

DESIGNED: R.B.
DRAWN: W.D.
TRACED: S.M.
CHECKED: R.B.
REVIEWED BY: R. Boy
PROJECT ENGINEER
REVIEWED BY: S.D. Walker
G-ECV-3B
REVIEWED BY:

U.S. COAST GUARD HEADQUARTERS
CIVIL ENGINEERING

1988 TYPE
THIRD CLASS CAN BUOY
(3CR)

APPROVED: James D. Garrison
CHIEF, OCEAN ENGINEERING BRANCH
DATE 9 Feb 88

UNLESS OTHERWISE SPECIFIED:
ALL DIMENSIONS ARE IN INCHES.
TOLERANCES: DIM. ±1/8
ANG. ±1°

DRAWING NUMBER 121113 REV. F
SCALE: AS NOTED SHEET 2 OF 2

PLOTTING SCALE: 3"=1'-0"