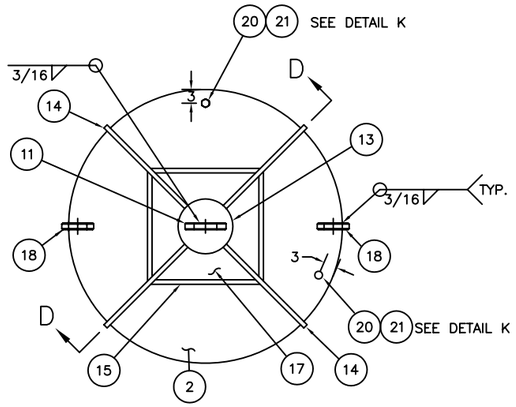

SECTION A–A
SCALE: 3/4"=1'–0"

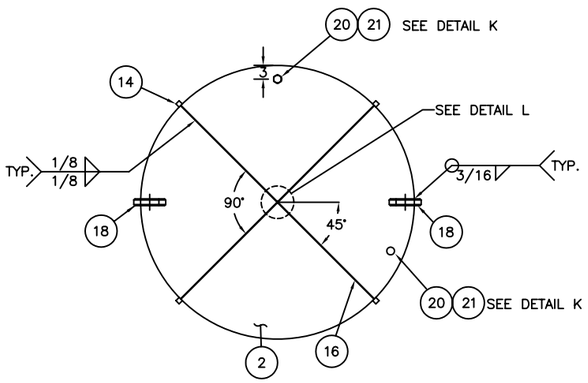

SECTION B–B
SCALE: 3/4"=1'–0"

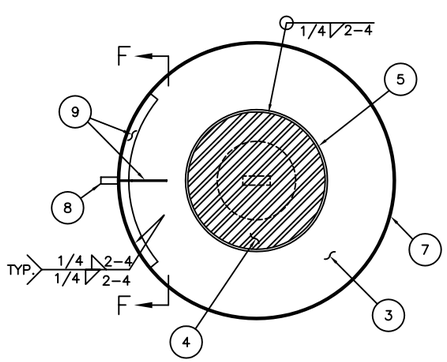

SECTION C–C
SCALE: 3/4"=1'–0"

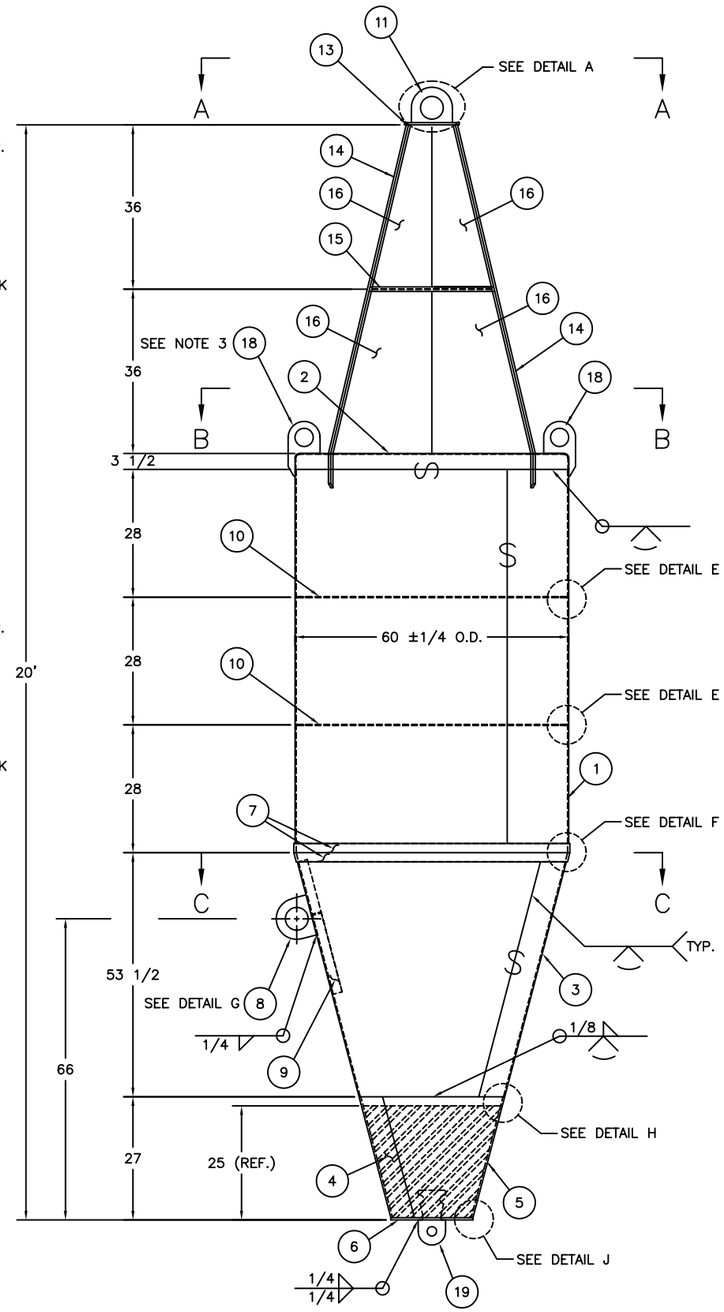

1NR
SCALE: 3/4"=1'–0"

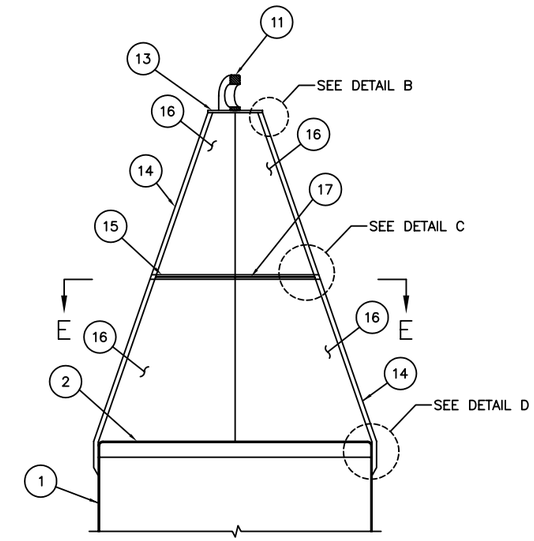

SECTION D–D
SCALE: 3/4"=1'–0"

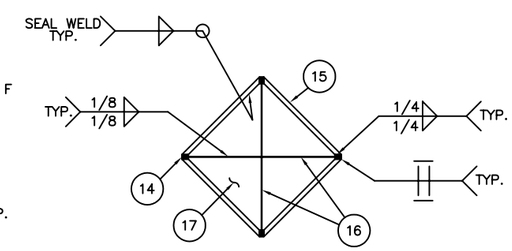

SECTION E–E
SCALE: 3/4"=1'–0"

BILL OF MATERIALS

ITEM NO.	NO. REQ.	DESCRIPTION	MATL.	REMARKS
1	1	BODY WRAPPER	STEEL	1/4 THK.
2	1	FLANGED HEAD	STEEL	60 O.D. x 3/16 THK.
3	1	CONICAL WRAPPER	STEEL	1/4 THK.
4	1	COUNTERWEIGHT	CAST IRON	SEE NOTE 2
5	1	COUNTERWEIGHT WRAPPER	STEEL	3/8 THK.
6	1	COUNTERWEIGHT PLATE	STEEL	18 DIA. x 1/2 THK.
7	2	DOUBLER STRIP	STEEL	1/4 THK. x 2 WD.
8	1	SIDE LIFT EYE	STEEL	1 1/2 THK.
9	3	SIDE LIFT EYE STIFFENER	STEEL	1/4 THK. x 2 WD.
10	2	WRAPPER STIFFENER	STEEL	1/4 THK. x 2 WD.
11	1	TOP LIFT EYE	STEEL	1 1/2 THK.
12				
13	1	TOP LIFT EYE PLATE	STEEL	12 DIA. x 1/2 THK.
14	4	VERTICAL REFLECTOR BAR	STEEL	1 SQ.
15	4	HORIZONTAL REFLECTOR BAR	STEEL	1 SQ.
16	2	VERTICAL RADAR REFLECTOR	STEEL	1/8 THK.
17	4	HORIZONTAL RADAR REFLECTOR	STEEL	1/8 THK.
18	2	TOP HEAD LIFT EYE	STEEL	SEE DRAWING 121140
19	1	MOORING EYE	STEEL	SEE DRAWING 121153
20	2	HALF COUPLING	STAIN STEEL	3/4 NPT
21	2	PIPE PLUG	STAIN STEEL	3/4 NPT

NOTES:

1. SEE LATEST REVISION OF U.S.C.G. CIVIL ENGINEERING SPECIFICATION No. 464 FOR FABRICATION REQUIREMENTS.
2. THE TOTAL WEIGHT OF ITEMS 4, 5, 6, & 19 SHALL BE 3,215 LBS. (+5% OR –1%).
3. THE TOP HEAD LIFT EYE (ITEM 18) DIRECTLY ABOVE THE SIDE LIFT EYE (ITEM 8), SHALL HAVE THE WORD "LIFT" WELDED ON IT.

REV.	DATE	APPR.	DESCRIPTION	BY
E	6–4 –99	S.W.	ADDED ADDITIONAL AIR TEST FITTING (ITEMS 20 & 21).	S.M.
D	2–7 –97	S.W.	REORGANIZED DWG. DEL ITEM 12. MOD ITEMS 15, 16, 17, & WELDS TO RADAR REF. ASSEMBLY. RELOCATED ITEMS 8 & 9.	S.M.
C	11–1 –94	S.W.	ADDED DETAIL 11. MODIFIED WELDS IN DETAILS 2, 3, & 4. ADDED INNER CHAMFER TO ITEMS 8 & 11.	S.M.
B	12–11 –92	W.D.	MODIFIED NOTE 2 & ITEMS 4, 11, 20 & 21. ADDED NOTE 5 & ADDITIONAL ITEM 18. RELOCATED ITEMS 8 & 9.	S.M.
A	2–22 –91	S.W.	REDRAWN USING AUTOCAD. MODIFIED NOTE 2 AND BILL OF MATERIALS. DELETED NOTE 5 AND DETAIL 11.	S.M.

DESIGNED: R.B.
DRAWN: W.D.
TRACED: S.M.
CHECKED: S.W.
REVIEWED BY: R. Boy, PROJECT ENGINEER
REVIEWED BY: S.D. Walker, G–ECV–3B
REVIEWED BY:

U.S. COAST GUARD HEADQUARTERS
CIVIL ENGINEERING

1988 TYPE FIRST CLASS NUN BUOY (1NR)

APPROVED: James D. Garrison, CHIEF, OCEAN ENGINEERING BRANCH
DATE: 9 Feb 88

UNLESS OTHERWISE SPECIFIED:
ALL DIMENSIONS ARE IN INCHES.
TOLERANCES: DIM. ±1/8
ANG. ±1°

DRAWING NUMBER: 121108
REV. E
SCALE: AS NOTED
SHEET 1 OF 2

PLOTTING SCALE: 3/4"=1'–0"

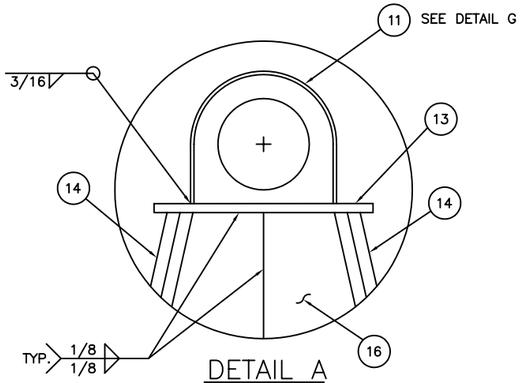

DETAIL A
SCALE: 3"=1'-0"

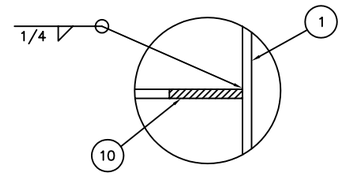

DETAIL E
SCALE: HALF

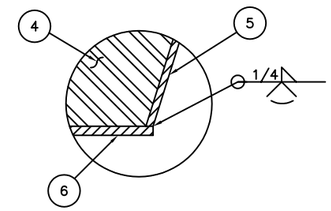

DETAIL J
SCALE: 3"=1'-0"

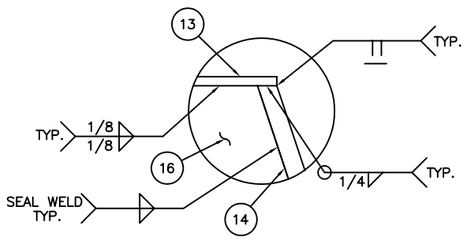

DETAIL B
SCALE: 3"=1'-0"

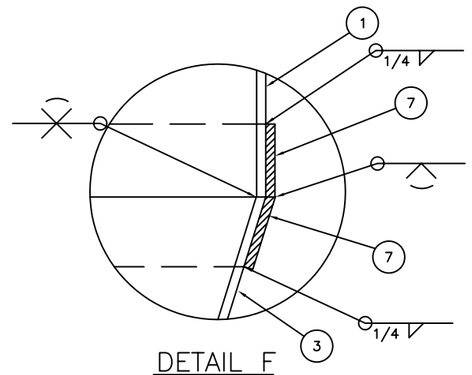

DETAIL F
SCALE: HALF

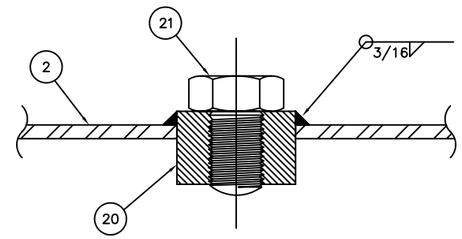

DETAIL K
SCALE: FULL

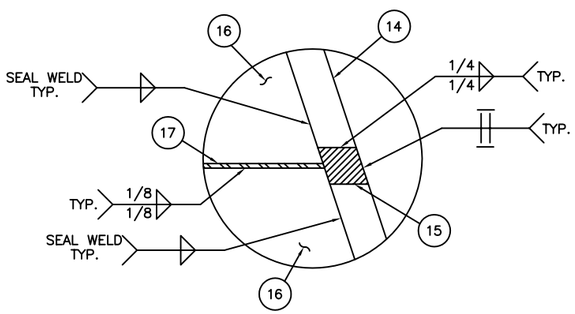

DETAIL C
SCALE: HALF

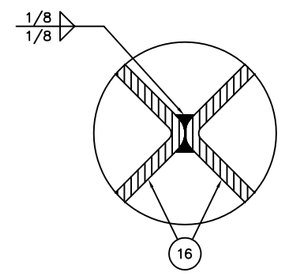

DETAIL L
SCALE: FULL

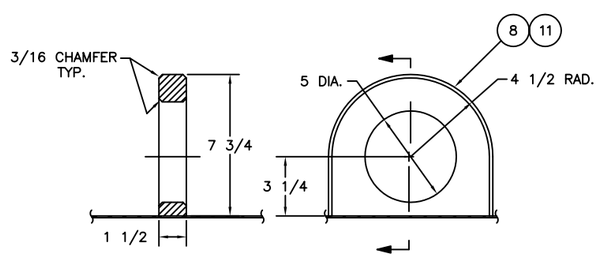

DETAIL G
SCALE: 3"=1'-0"

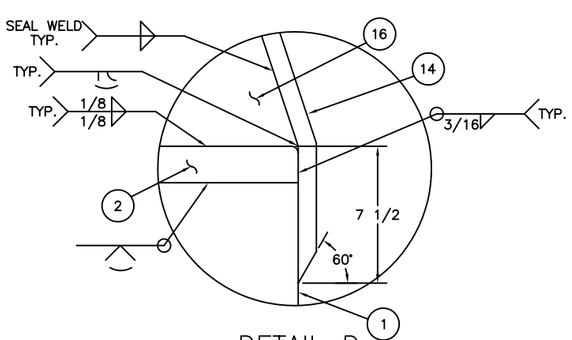

DETAIL D
SCALE: 3"=1'-0"

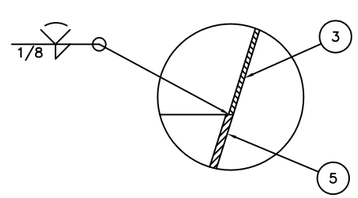

DETAIL H
SCALE: 3"=1'-0"

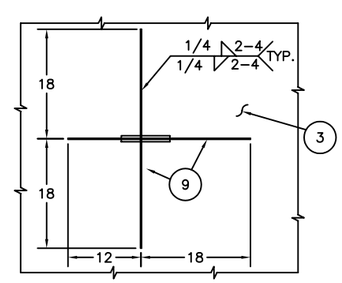

SECTION F-F
SCALE: 1"=1'-0"

REV.	DATE	APPR.	DESCRIPTION	BY
E	6-4-99	S.W.	ADDED ADDITIONAL AIR TEST FITTING (ITEMS 20 & 21).	S.M.
D	2-7-97	SW	REORGANIZED DWG. DEL ITEM 12. MOD ITEMS 15, 16, 17 & WELDS TO RADAR REF. ASSEMBLY. RELOCATED ITEMS 8 & 9.	S.M.
C	11-1-94	SW	ADDED DETAIL 11. MODIFIED WELDS IN DETAILS 2, 3, & 4. ADDED INNER CHAMFER TO ITEMS 8 & 11.	S.M.
B	12-11-92	WD	MODIFIED NOTE 2 & ITEMS 4, 11, 20, & 21. ADDED NOTE 5 & ADDITIONAL ITEM 18. RELOCATED ITEMS 8 & 9.	S.M.
A	2-22-91	SW	REDRAWN USING AUTOCAD. MODIFIED NOTE 2 AND BILL OF MATERIALS. DELETED NOTE 5 AND DETAIL 11.	S.M.

DESIGNED: R.B.
DRAWN: W.D.
TRACED: S.M.
CHECKED: S.W.
REVIEWED BY: R. Boy
PROJECT ENGINEER
REVIEWED BY: S.D. Walker
G-EOV-3B
REVIEWED BY:

U.S. COAST GUARD HEADQUARTERS
CIVIL ENGINEERING

1988 TYPE
FIRST CLASS NUN BUOY
(1NR)

APPROVED: James D. Garrison
CHIEF, OCEAN ENGINEERING BRANCH
DATE 9 Feb 88

UNLESS OTHERWISE SPECIFIED:
ALL DIMENSIONS ARE IN INCHES.
TOLERANCES: DIM. ±1/8
ANG. ±1°

DRAWING NUMBER 121108
REV. E
SCALE: AS NOTED
SHEET 2 OF 2

PLOTTING SCALE: 3"=1'-0"