BILL OF MATERIALS				
ITEM NO.	NO. REQ.	DESCRIPTION	MATL.	REMARKS
1	1	BATTERY BOX ASSEMBLY	–	SEE SPEC.
2	1	TOP HALF	PLASTIC	SEE SPEC.

NOTES:

1. SEE LATEST REVISION OF U.S.C.G. CIVIL ENGINEERING SPECIFICATION No. 199 FOR FABRICATION REQUIREMENTS.

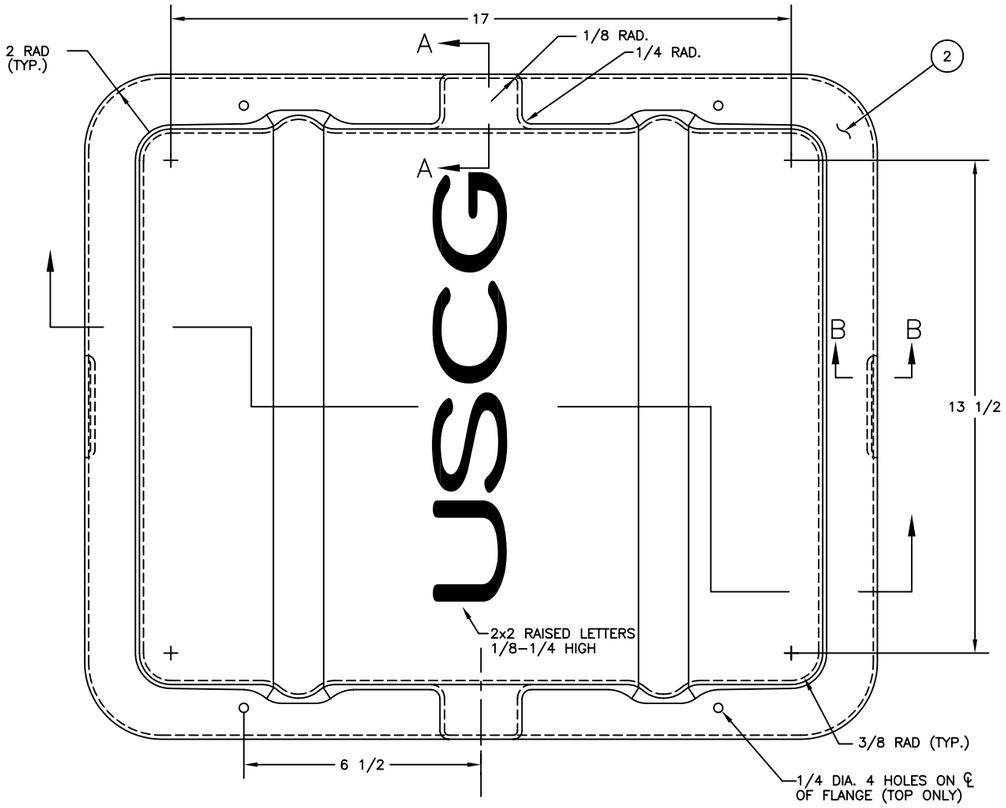

TOP VIEW

SCALE: HALF

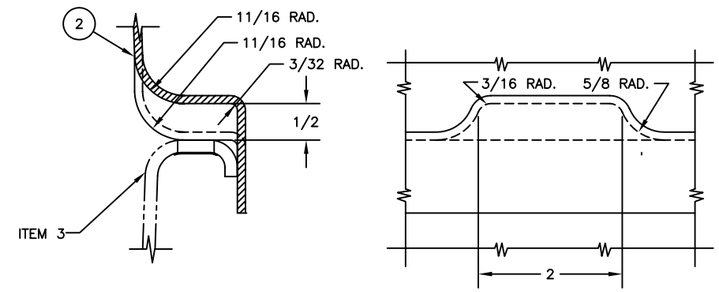

SECTION A–A

SCALE: FULL

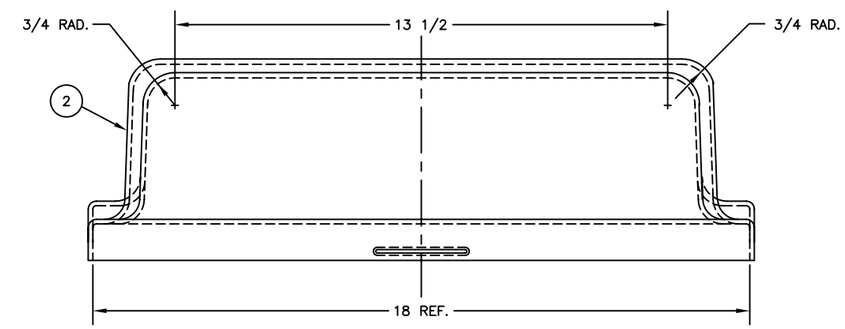

END VIEW

SCALE: HALF

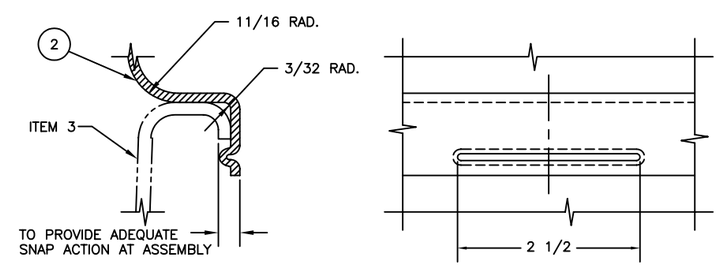

SECTION B–B

SCALE: FULL

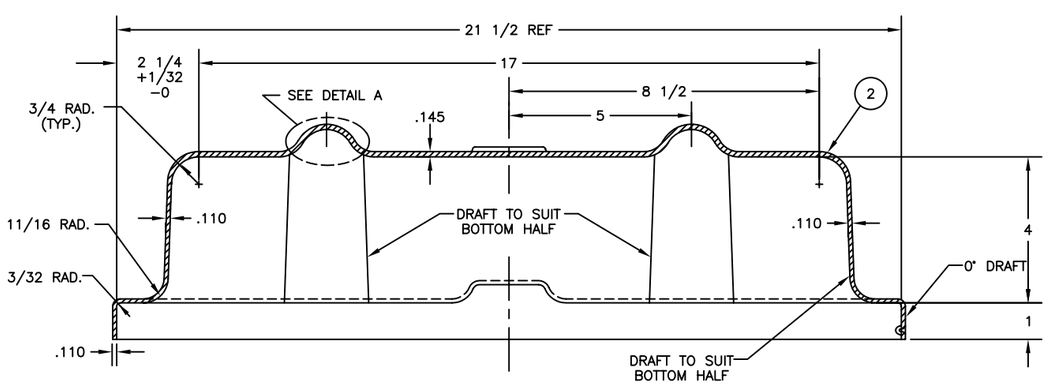

SECTION THROUGH TOP

SCALE: HALF

TABLE I	
THICKNESS	TOLERANCE
.145	+.062,–.010
.110	+.062,–.010

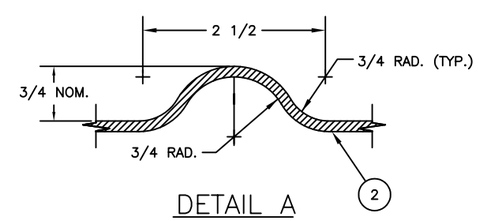

DETAIL A

SCALE: FULL

REV.	DATE	APPR.	DESCRIPTION	BY
C	11–17 –97	SW	MOD DIMS TO CORESPOND WITH ACTUAL DIMS AFTER THE MOLDING PROCESS. MOD THICKNESS IN TABLES I AND II.	S.M.
B	10–9 –96	S.W.	REDRAWN USING AUTOCAD. ADDED NOTES.	S.M.
A	8–29 –85	SW	CHANGED TOP VIEW DIMENSION FROM 6 TO 6 1/2. CHANGED DETAIL A DIMENSION FROM 1/2 TO 3/8 NOM.	W.D.

DESIGNED: S.D.W.
DRAWN: G.W.B.
TRACED: S.M.
CHECKED: S.D.W.
REVIEWED BY: Stan Walker G–EOE–4B
REVIEWED BY: L. G. Brudnicki G–EOE–4
REVIEWED BY: D. H. DeBok

U.S. COAST GUARD HEADQUARTERS

CIVIL ENGINEERING

A/N

SMALL BATTERY BOX

TOP HALF

APPROVED: R. Ross CHIEF OF DIVISION

DATE 8/7/84

UNLESS OTHERWISE SPECIFIED:
ALL DIMENSIONS ARE IN INCHES.
TOLERANCES: DIM. ±1/8
ANG. ±30'

DRAWING NUMBER 121055 REV. C

SCALE: AS NOTED SHEET 1 OF 2

PLOTTING SCALE: 6"=1'–0"

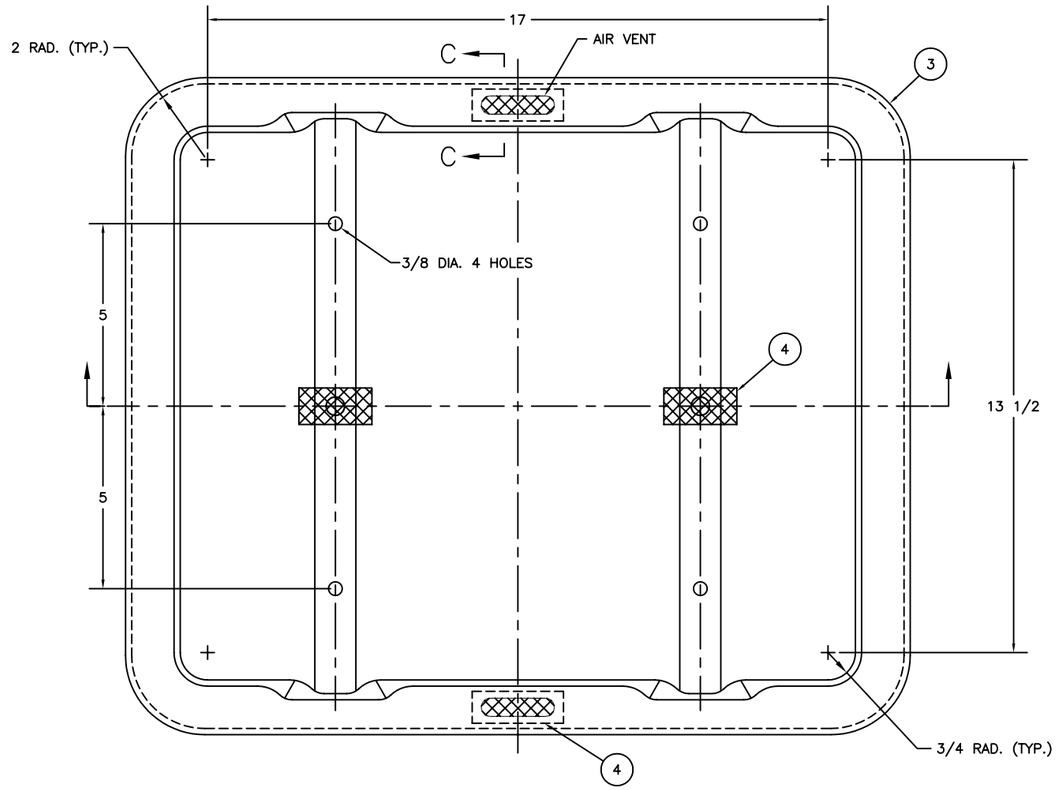

TOP VIEW BOTTOM HALF

SCALE: HALF

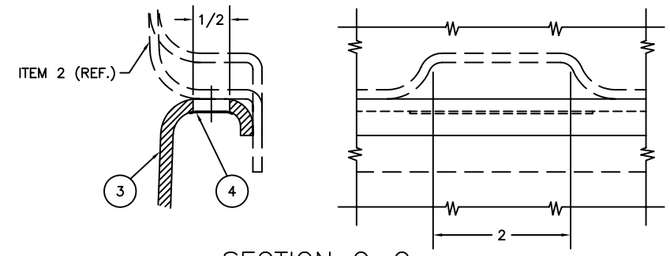

SECTION C–C

SCALE: FULL

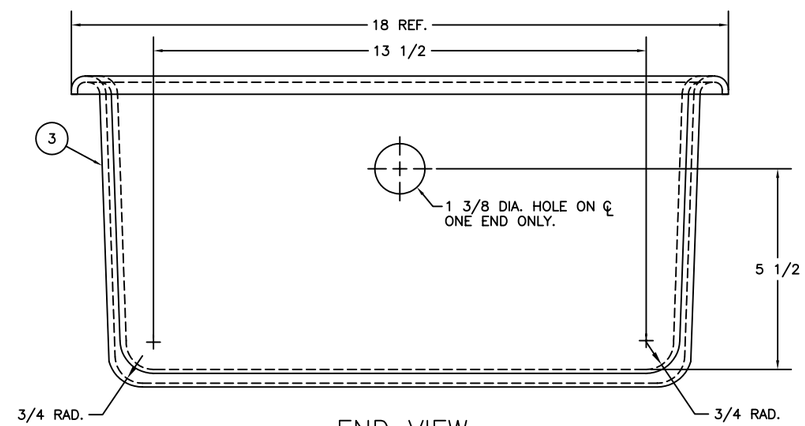

END VIEW

SCALE: HALF

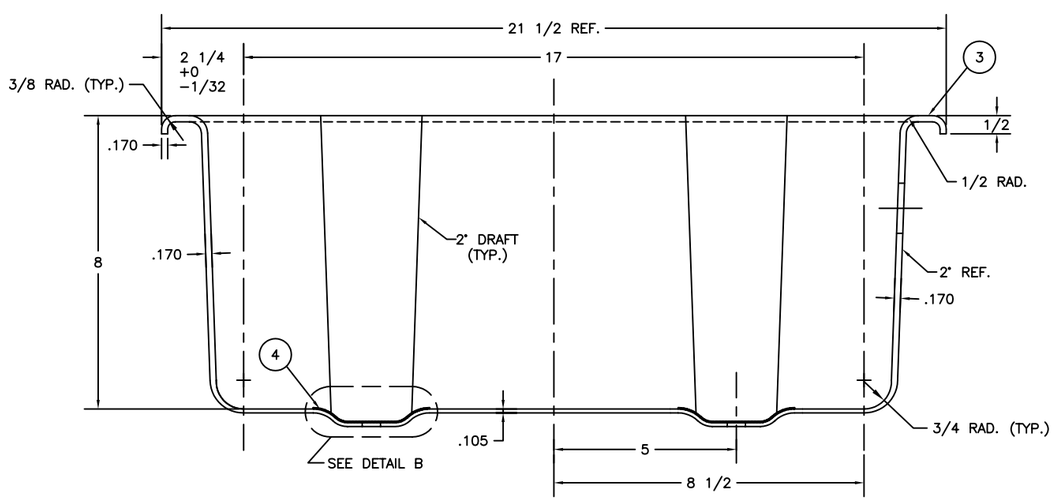

SECTION THROUGH BOTTOM HALF

SCALE: HALF

TABLE II	
THICKNESS	TOLERANCE
.105	+.062,−.025
.170	+.062,−.025

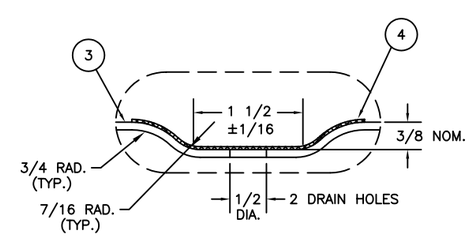

DETAIL B

SCALE: FULL

BILL OF MATERIALS

ITEM NO.	NO. REQ.	DESCRIPTION	MATL.	REMARKS
3	1	BOTTOM HALF	PLASTIC	SEE SPEC.
4	AR	SCREEN	FIBER GLASS	SEE SPEC.

NOTES:

1. SEE LATEST REVISION OF U.S.C.G. CIVIL ENGINEERING SPECIFICATION No. 199 FOR FABRICATION REQUIREMENTS.

REV.	DATE	APPR.	DESCRIPTION	BY
C	11–17–97	SW	MOD DIMS TO CORESPOND WITH ACTUAL DIMS AFTER THE MOLDING PROCESS. MOD THICKNESS IN TABLES I AND II.	SM
B	10–9–96	SW	REDRAWN USING AUTOCAD. ADDED NOTES.	S.M.
A	8–29–85	SW	CHANGED END VIEW DIMENSION FROM 6 TO 5 1/2.	W.D.

DESIGNED: S.D.W.
DRAWN: G.W.B.
TRACED: S.M.
CHECKED: S.D.W.
REVIEWED BY: Stan Walker G–EOE–4B
REVIEWED BY: L. G. Brudnicki G–EOE–4
REVIEWED BY: D. H. DeBok

U.S. COAST GUARD HEADQUARTERS
CIVIL ENGINEERING

A/N
SMALL BATTERY BOX
TOP HALF

APPROVED: R. Ross, CHIEF OF DIVISION
DATE: 8/7/84

UNLESS OTHERWISE SPECIFIED:
ALL DIMENSIONS ARE IN INCHES.
TOLERANCES: DIM. ±1/8
ANG. ±30'

DRAWING NUMBER: 121055
REV. C
SCALE: AS NOTED
SHEET 2 OF 2

PLOTTING SCALE: 6"=1'–0"