INCH-POUND
MIL-STD-1310H(NAVY)
17 September 2009

SUPERSEDING
MIL-STD-1310G(NAVY)
28 June 1996

DEPARTMENT OF DEFENSE
STANDARD PRACTICE

SHIPBOARD BONDING, GROUNDING, AND OTHER TECHNIQUES FOR ELECTROMAGNETIC COMPATIBILITY, ELECTROMAGNETIC PULSE (EMP) MITIGATION, AND SAFETY

AMSC N/A AREA EMCS

Source: http://www.assistdocs.com -- Downloaded: 2010-01-07T18:10Z
Check the source to verify that this is the current version before use.

FOREWORD

1. This standard is approved for use by the Department of the Navy and is available for use by all Departments and Agencies of the Department of Defense.

2. The increased use of electrical and electronic equipment aboard Naval ships introduces risk of electromagnetic interference (EMI) problems to ship operation and performance. As systems are added, they all contribute and could become susceptible to an intense electromagnetic environment (EME). Considering the corrosive salt water environment in which ships must operate and the interaction of a ship's electrically conductive metallic superstructure, topside hardware, antenna systems, etc., the potential for interoperability problems is significantly increased. Potential EMI and personnel safety problems related to electronic equipment operating in these environments are magnified because of:

a. The need to establish and maintain a low impedance (Z), common reference ground for all electrical/electronic equipment

b. The detrimental effects of:

(1) Natural and manmade electromagnetic (EM) energy

(2) Spurious and intentional EM energy

(3) Off-ship and own-ship, EM energy

3. MIL-STD-464 establishes electromagnetic environmental effects (E3) interface requirements and verification criteria for airborne, sea, space, and ground systems, including associated ordnance. This includes intra-ship and inter-ship electromagnetic compatibility (EMC), electromagnetic pulse (EMP), intermodulation interference (IMI), and electromagnetic radiation hazards to personnel, fuels, and ordnance.

4. This revision of MIL-STD-1310 has been expanded to include procedures for Electromagnetic Pulse (EMP) hardening. It also provides procedures and guidance to more easily address MIL-STD-464 requirements in relationship to intra- and inter-ship EMC, hull-generated IMI, lifecycle E3 hardness, EMP, and electrical bonding. However, adherence to the procedures contained herein does not relieve the contractor from meeting the applicable ships operational performance requirements specified in the contract.

5. This document does not specify EMI reduction through frequency management, limits on operating power, or use of blankers. Grounding for personnel safety continues to be a major part of this standard, particularly in regard to commercial-off-the-shelf (COTS) equipment and non-developmental items (NDI). A separate appendix is included herein with procedures to identify whether COTS/NDI equipment meets appropriate safety requirements herein before use, and to provide direction to bring them into conformance when necessary. This document does identify the E3 inspection and test procedures that can be used as measures of effectiveness of the EM control and personnel safety measures when installed/implemented.

6. Department of Defense (DoD) acquisition policy encourages contractor innovation, introduction of advancing technology, and determination of the appropriate methods and materials to be used for all DoD acquisitions. Many effective shipboard EMI control measures and materials have been identified by the government and subsequently specified as requirements for ship construction and availabilities. Mandating compliance works to the possible exclusion of equally effective industry-developed solutions. To avoid that possibility, this document defines EMC and safety requirements, and presents known effective solutions yet, when appropriate, allows the contractor an option to innovate a new solution with cognizant technical authority approval. Because the appropriate performance demonstration inspections and tests have been identified herein, whichever method/material is used, its effectiveness in meeting the requirement can be determined.

7. Comments, suggestions, or questions on this document should be addressed to Commander, Naval Sea Systems Command, ATTN: SEA 05B5, 1333 Isaac Hull Avenue, SE, Stop 5160, Washington Navy Yard DC 20376-5160 or emailed to CommandStandards@navy.mil, with the subject line "Document Comment". Since contact information can change, you may want to verify the currency of this address information using the ASSIST Online database at http://assist.daps.dla.mil.

Source: http://www.assistdocs.com -- Downloaded: 2010-01-07T18:10Z
Check the source to verify that this is the current version before use.

CONTENTS

PARAGRAPH PAGE

1. SCOPE....1
1.1 Scope....1
1.2 Application....1
1.3 Tailoring....1
1.4 New materials and technology....1
2. APPLICABLE DOCUMENTS....1
2.1 General....1
2.2 Government documents....1
2.2.1 Specifications, standards, and handbooks....1
2.2.2 Other Government documents, drawings, and publications....2
2.3 Non-Government publications....3
2.4 Order of precedence....3
3. ACRONYMS and DEFINITIONS....3
3.1 Acronyms used in this standard....3
3.2 Below deck areas....4
3.3 Bond-bonding (electrical)....4
3.4 Bond classification....4
3.5 Bond strap....4
3.5.1 Type V bond strap....4
3.6 Bright metal....4
3.7 Broadband noise (BBN)....5
3.8 Commercial-off-the-shelf (COTS)....5
3.9 Computer ground system....5
3.10 Conduit....5
3.11 Electrical surge suppressor, marine type....5
3.12 Electromagnetic compatibility (EMC)....5
3.13 Electromagnetic environment (EME)....5
3.14 Electromagnetic interference (EMI)....5
3.15 Electromagnetic pulse (EMP)....5
3.16 Ground (ground potential)....5
3.19 Ground loop....5
3.20 Ground, personnel/electrical safety....5
3.21 Ground, radio frequency (RF)....6
3.22 Ground, 360 degrees (peripheral)....6
3.17 Grounding....5
3.18 Grounding effectiveness....5
3.23 Intermodulation interference (IMI)....6
3.24 Maintenance-related EMI....6
3.25 Mobile-transportable electrical equipment....6
3.27 Nonlinear junction....6
3.26 Non-developmental item (NDI)....6
3.28 Portable equipment....6
3.29 Shield....6
3.30 Shielded area....6
3.31 Terminal protection device (TPD)....6

Source: http://www.assistdocs.com -- Downloaded: 2010-01-07T18:10Z
Check the source to verify that this is the current version before use.

3.32 Topside areas 6
3.33 Trunk, wireway 7
4. GENERAL REQUIREMENTS 7
4.1 Ground potential and ships ground plane 7
4.2 Class B and/or C bonding 7
4.3 EMP effects 7
4.4 Electrical safety 7
4.5 Bonding and grounding of composite structures 7
4.6 Introduction of new technology 7
4.7 Quality assurance inspection 7
5. DETAILED REQUIREMENTS 7
5.1 Ground potential and ship's ground plane(s) 7
5.1.1 Ground potential 7
5.1.1.1 Ground potential for metallic hull ships 7
5.1.1.2 Ground potential for nonmetallic hull ships 7
5.1.2 Ground plane(s) 7
5.1.2.1 Elements of the ground plane 8
5.1.2.1.1 Superstructure, equipment foundations and racks 8
5.1.2.1.2 Cable grounding system's branches 8
5.1.2.1.3 Shielded room(s) 8
5.1.2.1.4 Computer ground system 8
5.1.2.2 Grounded items 8
5.1.2.2.1 Equipment cabinets and hardware items 8
5.1.2.2.2 Shock-mounted 8
5.1.2.2.3 Large/long hardware items 8
5.1.2.2.4 Bond strap and grounding wire routing 8
5.1.2.2.5 Joiner/false/honeycomb bulkhead mounted equipment 8
5.1.3 Class B and class C bonding and grounding preparations 8
5.1.3.1 Class B and C bond installation 8
5.1.3.2 Hardware for class B and C bonding 9
5.1.3.3 Class C bonding/bond straps 9
5.1.3.3.1 Type I bond strap 10
5.1.3.3.2 Type II bond strap 10
5.1.3.3.3 Type III bond strap 10
5.1.3.3.4 Type IV bond strap 10
5.1.3.3.5 Type V bond strap 10
5.1.3.3.6 Bond strap attachment methods 10
5.1.4 Submarine equipment grounding 10
5.2 Hull-generated EMI prevention 10
5.2.1 Nonmetallic topside material 10
5.2.2 Topside stowage 11
5.2.2.1 Portable and removable metallic deck hardware 11
5.2.2.2 Other metallic material 11
5.2.3 Insulate topside metal-to-metal contact junctions 11
5.2.4 Bond topside metal-to-metal contact junctions 11
5.3 Cable and hull penetration EMI control 11
5.3.1 Topside cable installations 11
5.3.1.1 Shielded cable 11

Source: http://www.assistdocs.com -- Downloaded: 2010-01-07T18:10Z
Check the source to verify that this is the current version before use.

5.3.1.2 Unshielded cable 11
5.3.1.3 Wireway trunks 11
5.3.2 Hull penetration EMI control 12
5.3.2.1 Bonding metallic hull-penetrators 12
5.3.2.1.1 Rigid conduit 12
5.3.2.1.2 Flexible metal conduit 12
5.3.2.1.3 Waveguides, pipes, tubing, and exhaust stacks 12
5.3.3 Below decks cable and flexible metal conduit installations 12
5.3.3.1 Below deck flexible metal conduit bonding and grounding methods 12
5.3.3.2 Termination and coupling of Type 2 conduit 12
5.3.3.3 Shielded multi-conductor cables 13
5.4 EMP protection 13
5.4.1 Cables 13
5.4.2 Cable shielding performance 13
5.4.3 Wireway trunks 13
5.4.4 Waveguides, pipes, tubing, and exhaust stacks 13
5.4.5 Terminal protection device 14
5.4.6 EMP protection, composite structure 14
5.5 Superstructure blockage and reflections 14
5.5.1 Topside configuration drawings 14
5.5.2 Flat and reflective surfaces 14
5.6 Equipment-generated EMI prevention 14
5.6.1 RF tuned receiver front-end stages 14
5.6.2 LF-MF receiver(s), but no in-band transmitter(s) 14
5.6.3 BBN suppression; portable electrical tools 14
5.7 Electrical safety; personnel shock hazard prevention 14
5.7.1 Portable and mobile-transportable electrically-powered equipment 14
5.7.1.1 Electrical equipment with a conductive case 15
5.7.1.2 Electrical equipment with a non-conductive case 15
5.7.2 Fixed-installed, electrically-powered equipment 15
5.7.3 Fixed rack mounted or enclosure mounted electrically powered equipment 15
6. NOTES 15
6.1 Intended use 15
6.2 Acquisition requirements 15
6.3 Quality assurance provisions 15
6.3.1 In-progress inspection 15
6.3.2 Final inspection 16
6.3.3 Inspection responsibility 16
6.3.4 Inspector certification 16
6.3.5 Government verification 16
6.4 RF impedance measurement 16
6.5 Subject term (key word) listing 16
6.6 Changes from previous issue 16

FIGURES

FIGURE 1. EMI filter capacitor installation in sound powered telephone boxes 17
FIGURE 2. Typical wireway trunk 18
FIGURE 3. Cable shield grounding (split SGA) 19

Source: http://www.assistdocs.com -- Downloaded: 2010-01-07T18:10Z
Check the source to verify that this is the current version before use.

FIGURE 4. Cable shield grounding 20
FIGURE 5. Cable shield grounding 21
FIGURE 6. Cable shielding method, flexible metal conduit 22
FIGURE 7. Cable shielding method, flexible metal conduit 23
FIGURE 8. Waveguides grounding 24
FIGURE 9. Method of grounding flexible metal conduit for below decks cable installations 25
FIGURE 10. Antenna tuner and coupler grounding 26
FIGURE 11. Methods of attaching bond straps 27

APPENDIX A
A.1 SCOPE 28
A.1.1 Scope 28
A.2 APPLICABLE DOCUMENTS 28
A.2.1 General 28
A.2.2 Government documents 28
A.2.2.1 Specifications, standards, and handbooks 28
A.2.3 Order of precedence 28
A.3 INSTALLATION GUIDANCE 28
A.3.1 Class B and class C bonding 28
A.3.2 Hull-generated EMI 28
A.3.3 Bonding not recommended 29
A.3.4 RF tuned receiver front-end stages 29
A.3.5 COTS and NDI equipment 29
A.4 TESTING GUIDANCE 29
A.4.1 Pulse current injection (PCI) testing 29
A.4.2 Cable and case penetration/radiation EMI control 29

APPENDIX B
B.1. SCOPE 30
B.1.1 Scope 30
B.1.2 Implementation 30
B.1.3 Application 30
B.2 APPLICABLE DOCUMENTS 30
B.2.1 General 30
B.2.2 Government documents 30
B.2.2.1 Specifications, standards, and handbooks 30
B.2.2.2 Other Government documents, drawings, and publications 30
B.2.3 Order of precedence 30
B.3 COMMERCIAL QUALIFICATION DOCUMENTATION 31
B.4 ELECTRICAL SHOCK HAZARD PROTECTION REQUIREMENTS 31
B.4.1 Double insulated and non-conducting equipment 31
B.4.1.1 Double insulated equipment 31
B.4.1.2 Non-conducting equipment 31
B.4.2 Equipment with a conductive case or exposed conductive elements 31
B.4.2.1 Installation requirements; 3-pronged plug 31
B.4.2.2 Installation requirements; 2-pronged plug 31

Source: http://www.assistdocs.com -- Downloaded: 2010-01-07T18:10Z
Check the source to verify that this is the current version before use.

APPENDIX C

C.1 SCOPE 33
C.1.1 Scope 33
C.1.2 Primary common ground reference; systems and shielded spaces 33
C.1.3 Common ground reference outside shielded spaces 33
C.1.4 Common ground reference inside shielded spaces 33
C.1.5 Electrical safety ground for shock hazard protection 33
C.2 APPLICABLE DOCUMENTS 33
C.2.1 General 33
C.2.2 Government documents 33
C.2.2.1 Specifications, standards, and handbooks 33
C.2.3 Non-Government publications 33
C.2.4 Order of precedence 34
C.3 GROUND SYSTEM CABLES 34
C.3.1 Ground cable installation 34
C.3.2 Ground plate interconnecting cable 34
C.3.3 Main ground cable 34
C.3.4 Branch ground cables 34
C.3.5 Electronic transmitter ground cable 37
C.3.6 Antenna tuners and couplers, ground cable 37
C.3.7 Lightning protection 37
C.3.8 Metal mast 37
C.4 EQUIPMENT/ITEMS GROUNDING REQUIREMENTS 37
C.4.1 Equipment/items that shall be grounded 37
C.4.2 Items that should not require grounding 37
C.5 GROUNDING TO SHIELDED AREA 38
C.6 CONNECTIONS 38

FIGURES

FIGURE C-1. Nonmetallic hull ship multi-tree ground system 35
FIGURE C-2. Nonmetallic hull ship multi-tree ground connection methods 36

Source: http://www.assistdocs.com -- Downloaded: 2010-01-07T18:10Z
Check the source to verify that this is the current version before use.

1. SCOPE

1.1 Scope. This document specifies standard practices to facilitate achievement of the intra-ship and inter-ship electromagnetic compatibility (EMC), electromagnetic pulse (EMP), bonding, and intermodulation interference (IMI) requirements of MIL-STD-464.

1.2 Application. The requirements specified herein apply to metal and nonmetallic hull ships and are applicable during ship construction, overhaul, alteration, and repair. Requirements herein may be invoked upon contractor and government (military and civilian) personnel.

1.3 Tailoring. The requirements herein may be tailored with NAVSEA 05H3, Navy technical warrant authority, approval.

1.4 New materials and technology. To achieve requirements of this standard while reducing lifecycle maintenance costs, implementation of new materials and technology is encouraged. The new materials and technology should not prevent the ship from meeting all applicable MIL-STD-464 E3 performance requirements, and must not introduce EMI or safety problems. An example of new shipboard bonding and grounding technology is a flexible infrastructure deck track system designed to provide equipment reconfigurability.

2. APPLICABLE DOCUMENTS

2.1 General. The documents listed in this section are specified in sections 3, 4, or 5 of this standard. This section does not include documents cited in other sections of this standard or recommended for additional information or as examples. While every effort has been made to ensure the completeness of this list, document users are cautioned that they must meet all specified requirements of documents cited in sections 3, 4, or 5 of this standard, whether or not they are listed.

2.2 Government documents.

2.2.1 Specifications, standards, and handbooks. The following specifications, standards, and handbooks form a part of this document to the extent specified herein. Unless otherwise specified, the issues of these documents are those cited in the solicitation or contract.

FEDERAL SPECIFICATIONS

FF-N-836	-	Nut: Square, Hexagon, Cap, Slotted, Castle, Knurled, Welding and Single Ball Seat

COMMERCIAL ITEM DESCRIPTIONS

A-A-52506	-	Clamps, Hose
A-A-59313	-	Thread, Compound; Antiseize, Zinc Dust - Petrolatum

DEPARTMENT OF DEFENSE SPECIFICATIONS

MIL-I-631	-	Insulation, Electrical, Synthetic-Resin Composition, Nonrigid
MIL-DTL-1222	-	Studs, Bolts, Screws and Nuts for Applications Where a High Degree of Reliability is Required; General Specification for
MIL-S-22698	-	Steel Plate, Shapes and Bars, Weldable Ordinary Strength and Higher Strength: Structural
MIL-S-24149	-	Studs, Welding, and Arc Shields (Ferrules), General Specification for
MIL-S-24235	-	Stuffing Tubes, Metal, and Packing Assemblies for Electric Cables, General Specification for

Source: http://www.assistdocs.com -- Downloaded: 2010-01-07T18:10Z
Check the source to verify that this is the current version before use.

MIL-S-24235/9	-	Stuffing Tubes, Metal, and Packing Assemblies for Electric Cables, Brass and Steel, for Decks and Bulkheads with Pipe Protection
MIL-S-24235/14	-	Stuffing Tubes, Metal, and Packing Assemblies for Electric Cables, for Sheet Metal Enclosures
MIL-DTL-24558	-	Terminal Boxes, Connection, for Electrical and Electronic Systems, General Specification for
MIL-DTL-24749	-	Grounding Straps and Bosses, Electromagnetic, General Specification for
MIL-PRF-24758	-	Conduit Systems, Flexible, Weatherproof
MIL-PRF-39014/1	-	Capacitors, Fixed, Ceramic Dielectric (General Purpose), Established Reliability and Nonestablished Reliability, Style CKR05, NATO Type Designation NCC61

DEPARTMENT OF DEFENSE STANDARDS

MIL-STD-464	-	Electromagnetic Environmental Effects, Requirements for Systems
MIL-STD-2003-5		Electric Plant Installation, Standard Methods for Surface Ship and Submarines (Connectors)
MIL-STD-2169 (Classified)	-	High-Altitude Electromagnetic Pulse (HEMP) Environment

DEPARTMENT OF DEFENSE HANDBOOKS

MIL-HDBK-237	-	Electromagnetic Environmental Effects and Spectrum Supportability Guidance for the Acquisition Process

(Copies of these documents are available online at http://assist.daps.dla.mil/quicksearch/ or from the Standardization Document Order Desk, 700 Robbins Avenue, Building 4D, Philadelphia, PA 19111-5094.)

(Copies of MIL-STD-2169 are available from HQ DTRA, ATTN: RD-NTSA, 8725 John J. Kingman Road, Ft. Belvoir, VA 22060-6201 addressed with a need-to-know.)

2.2.2 Other Government documents, drawings, and publications. The following other Government documents, drawings, and publications form a part of this document to the extent specified herein. Unless otherwise specified, the issues of these documents are those cited in the solicitation or contract.

DEPARTMENT OF DEFENSE DOCUMENTS

JP 1-02	-	Department of Defense Dictionary of Military and Associated Terms

(Copies of this document are available from the Joint Doctrine Branch online at www.dtic.mil/doctrine/jel/new_pubs/jp1_02.pdf.)

NATIONAL COMMUNICATIONS SYSTEM (NCS)

NCS TIB 85-10, Volume I	-	Electromagnetic Pulse/Transient Threat Testing of Protection Devices for Amateur/Military Affiliate Radio System Equipment

(Copies of this document are available from the National Communications System online at www.ncs.gov.)

NAVAL SEA SYSTEMS COMMAND (NAVSEA) PUBLICATIONS

0910-LP-003-9770	-	Navy Installation and Maintenance Book
S9407-AB-HBK-010	-	Handbook of Shipboard Electromagnetic Shielding Practices

Source: http://www.assistdocs.com -- Downloaded: 2010-01-07T18:10Z
Check the source to verify that this is the current version before use.

(Copies of these documents are available from the Naval Logistics Library, 5450 Carlisle Pike, Mechanicsburg, PA 17055 or online at http://nll.ahf.nmci.navy.mil.)

2.3 Non-Government publications. The following documents form a part of this document to the extent specified herein. Unless otherwise specified, the issues of these documents are those cited in the solicitation or contract.

AMERICAN NATIONAL STANDARDS INSTITUTE (ANSI)

ANSI/IEEE C63.14 - Dictionary of Electromagnetic Compatibility (EMC) including Electromagnetic Environmental Effects (E3)

(Copies of this document are available from the American National Standards Institute, 25 W. 43rd St, 4th Floor, New York, NY 10036 or online at http://webstore.ansi.org/.)

SAE INTERNATIONAL

SAE-AS85049 - Connector Accessories, Electrical, General Specification for

(Copies of this document are available from SAE World Headquarters, 400 Commonwealth Drive, Warrendale, PA 15096-0001 or online at www.sae.org.)

2.4 Order of precedence. Unless otherwise noted herein or in the contract, in the event of a conflict between the text of this document and the references cited herein, the text of this document takes precedence. Nothing in this document, however, supersedes applicable laws and regulations unless a specific exemption has been obtained.

3. ACRONYMS and DEFINITIONS

The terms used that are not unique to this document are defined in ANSI Standard C63.14, Joint Pub 1-02, MIL-STD-464, and MIL-HDBK-237. The following acronyms and definitions are included herein for ready reference and are applicable for the purpose of this standard.

3.1 Acronyms used in this standard. The acronyms used in this standard are defined as follows:

AGC	-	Automatic Gain Control
AVC	-	Automatic Volume Control
BBN	-	Broadband Noise
C5ISR	-	Command and Control, Communications, Computers, Combat Systems, Intelligence Surveillance and Reconnaissance
COTS	-	Commercial-off-the-Shelf
CRES	-	Corrosion-Resistant Steel
DC	-	Direct Current
E3	-	Electromagnetic Environmental Effects
EM	-	Electromagnetic
EMC	-	Electromagnetic Compatibility
EME	-	Electromagnetic Environment
EMI	-	Electromagnetic Interference
EMP	-	Electromagnetic Pulse
HF	-	High Frequency
ICD	-	Installation Control Drawing
IEMC	-	Industrial Electromagnetic Compatibility
IMI	-	Intermodulation Interference

Source: http://www.assistdocs.com -- Downloaded: 2010-01-07T18:10Z
Check the source to verify that this is the current version before use.

LF	-	Low Frequency
MF	-	Medium Frequency
MHz	-	Megahertz
NDI	-	Non-Developmental Item
NFPA	-	National Fire Protection Association
NSTM	-	Naval Ships Technical Manual
NTDS	-	Naval Tactical Data System
PCI	-	Pulse Current Injection
RAM	-	Radar Absorbent Material
RF	-	Radio Frequency
SDO	-	Standards Development Organization
SSS	-	System Safety Society
UHF	-	Ultrahigh Frequency
VDE	-	Verbad Deutscher Elektrotechniker (German Institute of Electrical Engineers)
VHF	-	Very High Frequency
Z	-	Impedance

3.2 Below deck areas. An area in ships that is surrounded by a metallic structure such as the hull or superstructure of metallic surface ships, the hull of a submarine, the screened areas or rooms of non-metallic ships, the screened areas of ships utilizing a combination of metallic/non-metallic material for hull and superstructure or a deck mounted metallic shelter.

3.3 Bond-bonding (electrical). An electrical bond is a conductive (electrical current) path between two metallic surfaces established by welding, bolting/clamping, or addition of a bond strap. Bonding is the act of creating the bond.

3.4 Bond classification. The electrical bonding methods specified herein are classified as follows:

Class A	-	Metallic surfaces bonded by welding or brazing.
Class B	-	Metallic surfaces (bright metal) bonded by bolting or clamping.
Class C	-	Metallic surfaces (bright metal) bonded by bridging them with a metallic (conductive) bond strap.

3.5 Bond strap. A device used to establish a Class C bond. Standard bond straps are constructed in accordance with MIL-DTL-24749 and classified, according to construction, into four types:

Type I	-	CRES 316 ¼-inch wire rope with lugs of CRES 316L SCHED 80S pipe. (Note: Separately acquired mounting bosses are required to install Type I bond straps.)
Type II	-	Flat CRES 316 (1x5 width to length ratio) with mounting holes in each end.
Type III	-	Flat copper (1x5 width to length ratio) with mounting holes in each end.
Type IV	-	Flat copper braid (minimum 1" width) with end terminals and mounting holes in each end.

3.5.1 Type V bond strap. A modified MIL-DTL-24749 Type or uniquely constructed bond strap for unique and specific application (i.e., grounding of wire rope rigging).

3.6 Bright metal. The cleaning of any paint, grease, rust, corrosion, or other foreign material from a metal surface thereby exposing the basic metal in a clean or bright condition.

Source: http://www.assistdocs.com -- Downloaded: 2010-01-07T18:10Z
Check the source to verify that this is the current version before use.

3.7 Broadband noise (BBN). EM interference that has the spectral energy distributed over a wide frequency in relation to the frequency bandwidth of the equipment receiving the interference. Broadband noise interference is broadly tunable and will exist over all or a portion of the tuning range of an affected receiver.

3.8 Commercial-off-the-shelf (COTS). COTS equipment is any item that can be purchased through commercial retail or wholesale distributors as is, for example; equipment that is available as a catalog item.

3.9 Computer ground system. A separate hardwired ground system installed in accordance with system installation control drawings to isolate the power supplies of shipboard digital systems from EMI and power line transients generated in other electrically-powered systems onboard (see electrical surge suppressor).

3.10 Conduit. Conduit is a metal enclosure, normally of circular construction, used as EM shielding for a cable or cables routed within the conduit. Conduit may be flexible (in accordance with MIL-PRF-24758) or rigid.

3.11 Electrical surge suppressor, marine type. A power line conditioning device to protect vulnerable electronic equipment from common mode and differential mode voltage and current transients generated in other electrically-powered onboard systems sharing electrical power lines (as opposed to a separate power line/ground system in accordance with a specific installation control drawing as in 3.9 above).

3.12 Electromagnetic compatibility (EMC). The ability of electronic/electrical equipment, subsystem, and systems to operate in their intended operational environments without suffering or causing unacceptable degradation because of EM radiation or response.

3.13 Electromagnetic environment (EME). The resulting product of the power and time distribution, in various frequency ranges, of the radiated or conducted EM emission levels that may be encountered by a military force, system, or platform when performing its assigned mission in its intended operational environment.

3.14 Electromagnetic interference (EMI). Any electromagnetic disturbance that interrupts, obstructs, or otherwise degrades or limits the effective performance of electronics and electrical equipment. It can be induced intentionally, as in some forms of electronic warfare, or unintentionally, as a result of spurious emissions and responses, intermodulation products, and the like.

3.15 Electromagnetic pulse (EMP). The electromagnetic radiation caused by Compton-recoil electrons and photoelectrons from photons scattered in the materials of the nuclear device or in a surrounding medium as a result of a nuclear explosion or lightning. The resulting electric and magnetic fields may couple with electrical/electronic systems to produce damaging current and voltage surges.

3.16 Ground (ground potential). A point, plane, or surface designated as the zero potential (nominally) common reference point for electrical or electronic equipment.

3.17 Grounding. The process of bonding a metallic item to ground potential.

3.18 Grounding effectiveness. The effectiveness of metallic penetrations bonded at the ship's hull to direct currents induced on these penetrations by topside EMI and EMP to the ship's ground. These metallic penetrations include pipes, waveguides, cables, and metal tubing.

3.19 Ground loop. More than one path to ground for an equipment or system such that the designated ground is not maintained at a common potential; normally caused by multipoint grounding. Lack of a common reference point (ground) may result in common mode (interference) currents in the ground loop.

3.20 Ground, personnel/electrical safety. Bonding of electrical and electronic equipment cabinets, cases, housings and exposed metal (conductive) components to ground potential by any class bond described herein, or by the installation of a ground wire to establish a contact resistance of 0.1 ohm or less. An electrical safety ground does not necessarily meet requirements for EMC/RF ground.

Source: http://www.assistdocs.com -- Downloaded: 2010-01-07T18:10Z
Check the source to verify that this is the current version before use.

3.21 Ground, radio frequency (RF). Unless otherwise specified herein or in an Installation Control Drawing (ICD), an RF ground is the ground that conducts RF energy in the ship's ground plane and establishes between the connections a common RF potential with ship's ground plane.

3.22 Ground, 360 degrees (peripheral). A continuous metal-to-metal bond, existing or provided, around the outer perimeter of a metallic item or cable shield terminating at or penetrating through a metal surface that is at ground potential.

3.23 Intermodulation interference (IMI). The production in a nonlinear element of frequencies equal to the sums and differences of integral multiples of two or more frequency sources which cause EMI in another equipment or system. The nonlinear element may be internal or external to electronic systems.

3.24 Maintenance-related EMI. A designation assigned to EMI problems that can have severe, medium, or mild mission area impact, but have been proven to result from improper installation or inadequate maintenance. Proper installation and continuing maintenance will prevent maintenance-related EMI from affecting operations.

3.25 Mobile-transportable electrical equipment. Mobile-transportable electrical equipment is any equipment that:

a. Can be moved from place-to-place for use.

b. (Normally) remains stationary while in use.

c. Is powered by a plug-in power cord versus being hard-wired to the electrical supply.

3.26 Non-developmental item (NDI). A statutory term describing items that have been previously developed fo7r use by Federal, State, local or allied governments.

a. An item of supply that is available in the commercial marketplace.

b. A previously developed item of supply that is in use by a department or agency of the United States Government, a State or local government, or a foreign government with which the United States has a mutual defense cooperation agreement.

c. An item described in a or b above that requires only minor modification to conform to the procuring agency's requirements.

d. An item currently being produced that does not conform to requirements specified in a through c above solely because the item is not yet in use, or not yet available in the commercial marketplace.

3.27 Nonlinear junction. A contact area between two metallic surfaces which exhibits nonlinear voltage-current transfer characteristics when subjected to an RF voltage. This nonlinearity is usually caused by corrosion or other semi-conducting materials in the contact area.

3.28 Portable equipment. Any equipment moved from place-to-place for use and (normally) capable of being hand-held while in operation. Portable equipment includes portable movable equipment enclosures as well as handheld equipment.

3.29 Shield. A metal barrier of solid, screen, or braid construction used to protect electronic components, wires, or cables from EM energy; or used to reduce the emission of EM energy from components, wires, or cabling.

3.30 Shielded area. Area not directly exposed to EM energy. This includes shielded spaces, compartments and rooms; areas inside the hull and superstructure of metallic hull ships; areas inside metallic shelters, a metallic enclosure or a metallic mast; and areas in screen rooms on nonmetallic hull ships.

3.31 Terminal protection device (TPD). A quick reaction switching device which is installed between a susceptible circuit and ground to protect electronic components from lightning and EMP damage. TPDs may also be identified as transient protection devices or surge protection devices.

3.32 Topside areas. All shipboard areas continuously exposed to the external electromagnetic environment, such as the main deck and above, catwalks, and those exposed portions of gallery decks.

Source: http://www.assistdocs.com -- Downloaded: 2010-01-07T18:10Z
Check the source to verify that this is the current version before use.

3.33 Trunk, wireway. A metal enclosure that provides EM shielding to the cables routed therein. One or more sides of the trunk may be ship's structure.

4. GENERAL REQUIREMENTS

4.1 Ground potential and ships ground plane. On both metallic and nonmetallic hull ships, ground potential shall be established and maintained in accordance with 5.1 as required for electrical and electronic equipment operation, EMC, EMP mitigation, and electrical safety. Class A bonding will be used to maintain the ship's ground plane.

4.2 Class B and/or C bonding. Class B and C bonding shall be used only as required for electrical safety, equipment operation, EMI mitigation, or EMP effects control.

4.3 EMP effects. Effects of EMP shall be prevented in accordance with 5.4 in those ships that have a specific requirement for EMP protection.

4.4 Electrical safety. All non-current-carrying metallic parts of electrical equipment shall be effectively grounded by one of the following methods:

a. Metal frames or enclosures of electrical receptacles and other apparatus shall be fixed to and be in metallic contact with the ship's structure, provided that the surfaces in contact are free from rust, scale, or paint when installed and are firmly bolted together.

b. Alternatively, they shall be connected to the hull either directly by ground strap or, for portable equipment, via the grounding terminal of a receptacle outlet.

A reading of 0.1 ohm (dc resistance) or less shall be achieved between an equipment enclosure and an adjacent structural ground potential point.

4.5 Bonding and grounding of composite structures. A Project Peculiar Document (PPD) shall be developed by the cognizant program manager for each composite structure developed for shipboard installation. The PPD shall be written to meet the intent of the requirements herein. The PPD will become effective when approved by the technical authority for this standard.

4.6 Introduction of new technology. Introduction of new technology and innovation is encouraged. However, application of new technology and innovations to satisfy the requirements herein shall be approved by the Technical Warrant Authority before being implemented.

4.7 Quality assurance inspection. A quality assurance in-process inspection shall be performed as specified (see 6.2).

5. DETAILED REQUIREMENTS

5.1 Ground potential and ship's ground plane(s).

5.1.1 Ground potential.

5.1.1.1 Ground potential for metallic hull ships. On metallic hull ships, the metal hull, when in contact with the water, shall establish and be designated as ground potential. When the ship is removed from the water, cognizant authority is responsible to ensure an appropriate ground is established and maintained.

5.1.1.2 Ground potential for nonmetallic hull ships. On nonmetallic hull ships, ground plate(s), installed to provide an earth ground connection via contact with sea water, shall be installed to establish ground potential. The ground plate(s) shall be installed at the lowest point of the structural hull, as close as possible to the vertical of the mast. A throughbolt shall be brazed to each ground plate to provide a connection point for installation of the cable grounding system ground plane (see Appendix C). When the ship is removed from the water, cognizant authority is responsible to ensure an appropriate ground is established and maintained.

5.1.2 Ground plane(s). For both metallic and nonmetallic hull ships, all Class A bonded (welded or brazed) extensions to ship's ground potential, topside and below decks, shall be designated as the ship's ground plane.

Source: http://www.assistdocs.com -- Downloaded: 2010-01-07T18:10Z
Check the source to verify that this is the current version before use.

5.1.2.1 Elements of the ground plane. The following shall be bonded to ground potential to form elements of the ground plane.

5.1.2.1.1 Superstructure, equipment foundations and racks. Metallic superstructure, equipment foundations and racks, and mounting studs or brackets to which equipment is bolted for installation shall be bonded to the ground plane in accordance with the requirements of a Class A bond.

5.1.2.1.2 Cable grounding system's branches. Cable grounding system's branches and branch extensions connected to or terminating at the ground cable(s) of a nonmetallic hull ship's ground plane shall be Class A bonded.

5.1.2.1.3 Shielded room(s). Shielded room(s) on nonmetallic hull ships shall be bonded in accordance with the requirements of a Class A bond to the cable ground plane.

5.1.2.1.4 Computer ground system. Computer ground systems shall be installed in accordance with applicable computer system installation control drawings.

5.1.2.2 Grounded items. Equipment and hardware that is Class B or Class C bonded to the ship's ground plane shall be designated as grounded, but not as an element of the ground plane for grounding other items.

5.1.2.2.1 Equipment cabinets and hardware items. Electrical and electronic equipment cases, cabinets, racks, or enclosures that may require routine removal for repair and replacement during the ship's life cycle shall be Class B or Class C bonded to ground.

5.1.2.2.2 Shock-mounted. Shock-mounted equipment and equipment racks shall be Class C bonded to ground. Equipment mounted within equipment racks shall be grounded by a conductor within the cable harness.

5.1.2.2.3 Large/long hardware items. Unless insulated to prevent metal-to-metal contact in accordance with 5.2.3 below, topside metallic hardware items with any physical dimension greater than 10 feet shall be Class B or Class C bonded to ground.

5.1.2.2.4 Bond strap and grounding wire routing. All bond straps and grounding wires bonded to the ground plane shall be directly routed and as short as practical. Only one bond strap shall be connected to each stud or boss.

5.1.2.2.5 Joiner/false/honeycomb bulkhead mounted equipment. All electrical equipment mounted on a joiner/false/honeycomb bulkhead must have a separate green ground wire, or conductor identified with a wire label/tag as the ground wire, which connects to ship's ground plane. The current carrying capacity of the ground wire/conductor shall be equal or greater than the source conductor.

5.1.3 Class B and class C bonding and grounding preparations.

5.1.3.1 Class B and C bond installation. The following procedures shall be used to ensure effective Class B and Class C bonds.

a. Antenna tuners and couplers. HF antenna tuners and couplers shall be bonded as shown in figure 10.

b. Class B bonding procedure. At least one mounting bolt hole/mounting foot shall be prepared for electrical safety. All mounting feet/mating surfaces shall be prepared for C5ISR equipment operation and EMI/EMP mitigation bonding (see 4.2).

(1) Clean mating surfaces (e.g., sand, file, grind, brush, scrape, etc.) down to smooth, bright metal of item to be mounted. Use care not to gouge deep pits or grooves in the mating surfaces. Clean the contact surface(s) on the mounting area (ground plane) approximately ¼ inch larger than the mounting foot such that complete bright-metal contact is achieved when they are mated.

(2) Wipe down all surfaces to be mated with MIL-C-81302 non-residue type cleaning solvent to ensure they are clean and free of paint chips, metal filings and other residue.

Source: http://www.assistdocs.com -- Downloaded: 2010-01-07T18:10Z
Check the source to verify that this is the current version before use.

(3) Apply a thin film of Antiseize zinc dust - Petrolatum (A-A-59313) to the cleaned areas of the mating surfaces and to the threads of all hardware (bolts and nuts) to be used. Alternatively, and preferred for dissimilar metal junctions, a conductive gasket (A-A-59398) may be used in place of antiseize for topside and wet space installations below deck. It should be noted that many aircraft antennas, such as those used on LCAC's have precut conductive gaskets specifically made for them.

(4) Bolt item to the mating surface and torque all bolts as specified/required.

(5) Seal and preserve the junction for installations located topside or in wet spaces.

(a) Apply Permatex Form-A-Gasket #2 (CAGE 01232; NSN 8030-00-849-0071) or equivalent non-acidic sealing compound around the perimeter of the mating surfaces and mounting hardware.

(b) Use finger or orangewood stick to contour and mold sealing compound to the edges of the material around the mating surfaces.

(c) Paint/repaint scraped and brushed areas.

c. Class C bonding procedure.

(1) Clean (e.g., sand, file, grind, brush, scrape, etc. down to smooth, bright metal) the surfaces/areas where the bond strap is to be mounted approximately ¼ inch larger than the bond strap end lug, or boss if installing a Type I bond strap topside. Use care not to gouge deep pits or grooves in the mating surfaces. The distance between the mounting points shall be as short as practical to minimize impedance of the strap. Weld bosses in place for Type I bond strap installations topside. Repaint areas disturbed by welding (see 5.1.3.3.d and figure 11).

(2) Wipe down all surfaces to be mated with MIL-C-81302 non-residue type cleaning solvent to ensure they are clean and free of paint chips, metal filings and other residue.

(3) Apply a thin film of Antiseize zinc dust - Petrolatum (A-A-59313) to the cleaned areas of the mating surfaces and to the threads of all hardware (bolts and nuts) to be used.

(4) Bolt strap in place and torque bolt to 25 foot-pounds.

(5) Seal and preserve the junction for Type II bond straps installed topside or in wet spaces.

(a) Apply Permatex Form-A-Gasket #2 (CAGE 01232; NSN 8030-00-849-0071) or equivalent non-acidic sealing compound around the perimeter of the mating surfaces and mounting hardware.

(b) Use finger or orangewood stick to contour and mold sealing compound to the edges of the material around the mating surfaces.

(c) Paint/repaint scraped and brushed areas.

5.1.3.2 Hardware for class B and C bonding. All hardware (e.g., straps, bosses, bolts, nuts, and washers) used for new or replacement shipboard Class C bonding shall conform to MIL-DTL-24749 requirements. Unless otherwise specified in an installation control drawing (ICD) or ship specification, hardware for equipment and metallic items requiring Class B bonding shall be CRES 316.

5.1.3.3 Class C bonding/bond straps. Bond strap requirements shall be documented in an EM Control Topside Arrangement drawing as specified in the applicable drawing development or revision procedure.

a. Excess or unnecessary bond straps shall not be installed (see 4.2).

b. Unless removal and reinstallation is required in the course of production, still functional bond straps previously approved shall not be removed or replaced. Note: this does not apply for new construction ships.

c. When removal and reinstallation is required in the course of production, bond straps fabricated from previously approved materials shall be replaced with those conforming to MIL-DTL-24749.

d. Equipment cases, cabinets, and enclosures shall not be damaged or altered for bond strap installation. Holes shall not be drilled into and boss(es) shall not be welded to, an equipment case, cabinet, or enclosure without written approval from cognizant ISEA.

(1) Factory-installed grounding studs, bolts, or threaded holes shall be used as the bond strap tie-point to the equipment (when available).

Source: http://www.assistdocs.com -- Downloaded: 2010-01-07T18:10Z
Check the source to verify that this is the current version before use.

(2) When a factory-installed tie point is not available, the bond strap end lug shall be bolted to the equipment at pre-drilled holes in the mounting surface(s).

5.1.3.3.1 Type I bond strap. Type I bond straps shall be used in shipboard topside areas when appropriate for electrical safety equipment operation, EMP effects control and to bond metal-to-metal junctions identified as hull-generated EMI (BBN/IMI) sources.

5.1.3.3.2 Type II bond strap. Type II bond straps shall be used in shipboard topside areas for bonding EMI source items such as antenna tuners or couplers (see figure 10), equipments, enclosures, and cabinets.

5.1.3.3.3 Type III bond strap. Type III bond straps shall be used in shipboard below deck areas for bonding equipments, enclosures, and cabinets.

5.1.3.3.4 Type IV bond strap. Type IV bond straps shall be used in shipboard below deck areas for bonding equipment utilizing sound isolated mounts or shock mounts (nonmetallic mounts).

5.1.3.3.5 Type V bond strap. Type V bond straps shall be designed as required for unusual situations when a standard bond strap constructed in accordance with MIL-DTL-24749 is not practical. Type V bond straps shall be approved by the Technical Warrant Authority of this standard only for use in special/specific applications.

5.1.3.3.6 Bond strap attachment methods. The standard methods depicted in figure 11 shall be used for attachment of bond straps.

5.1.4 Submarine equipment grounding. Sound isolated floating platforms, decks, and bedplates shall be grounded to the submarine hull by using Type IV ground straps with lug terminals on each end. These ground straps shall be located a minimum of once every 15 feet along the perimeter of the platform (port and starboard sides) and shall be installed on studs welded to the platform and hull. Ground straps shall be located away from traffic areas, shall have sufficient slack to allow for platform movement without causing a sound short, and shall be accessible for inspection.

NOTE: These are minimum grounding requirements for sound isolated decks, platforms, and bedplates. Ground straps that have been installed by other requirements shall not be removed.

5.2 Hull-generated EMI prevention. Hull-generated EMI, caused by topside nonlinear or intermittent metal-to-metal contact junctions as a result of EM energy induced as nearby antennas are radiated, shall be prevented through:

a. Nonmetallic material

b. Topside stowage practices

c. Insulation material

d. Bonding and grounding

5.2.1 Nonmetallic topside material. A nonmetallic substitute shall be used to eliminate (at least one of) the metal item(s) that make up topside metal-to-metal contact junction(s).

a. Nonmetallic substitutes and fabrication practices. Nonmetallic items and fabrication practices to be considered include but are not limited to the following:

(1) Fiberglass or composite stowage lockers and racks, portable-removable stanchions, flagstaffs and jackstaffs.

(2) Hybrid ladder assemblies, i.e., fiberglass or composite siderails – metal treads and handrail(s).

(3) Fiberglass or composite (double-insulated) equipment cabinets and motor casings.

(4) Aramid fiber (KEVLAR®, or equivalent) rope lifelines, mast stays, standing rigging and safety nets.

Source: http://www.assistdocs.com -- Downloaded: 2010-01-07T18:10Z
Check the source to verify that this is the current version before use.

5.2.2 Topside stowage. Stowage brackets, lockers, bins, or other stowage protected from the topside EME, shall be provided for portable and removable hardware used topside, such as: awning stanchions, flag and jackstaffs, accommodation ladders; wire rope slings, gripes, and stays, and tie-down chains/chocks when not in use. Deck stowage for metallic material not required for use topside shall be avoided.

5.2.2.1 Portable and removable metallic deck hardware. Portable and removable metallic deck hardware items shall be stowed when not in use on; sponson decks, inside covered companionways, below decks, or in stowage lockers and other protected areas isolated from HF transmitter antennas.

5.2.2.2 Other metallic material. Metallic items carried for stock, turn-in, or repair and not requiring immediate access, such as; angle iron, I-beams, pipes, sheet metal, barrels, argon-oxygen-nitrogen gas bottles, expended ordnance shell casings, etc., shall not be stowed topside near EM antennas.

5.2.3 Insulate topside metal-to-metal contact junctions. Unless isolating the item from ground will result in its becoming an RF burn hazard, insulating material shall be installed on the contact surfaces of built-in stowage brackets for metallic hardware items located in the topside EME whenever:

a. A suitable nonmetallic substitute is not available,

b. The items, such as; booms, dismountable highline stanchions and their stowage cradles, cannot be relocated from the topside EME, and

c. Insulation is preferable to, or the item is not suited to bonding.

5.2.4 Bond topside metal-to-metal contact junctions. Whenever metallic hardware in the topside EME is identified as a hull-generated EMI source, and the EMI is not resolved in accordance with 5.2.1, 5.2.2, or 5.2.3 above, the metal-to-metal contact junction shall be Class A, B, or C bonded in accordance with 5.1.2 and 5.1.3 as required to eliminate IMI/BBN.

a. Class A bond usage. Stationary metallic hardware items commonly installed topside, (such as life rails, stanchions, swab racks, etc.), shall be Class A bonded.

b. Class B or C bond usage. Portable and removable hardware items commonly installed topside, (such as equipment cabinets, enclosures, and cases, dismountable lifeline and heavy weather stanchions, flagstaffs and jackstaffs, etc.), shall be Class B or C bonded when required for safety or IMI/BBN mitigation.

5.3 Cable and hull penetration EMI control.

5.3.1 Topside cable installations. All electrical and electronic system cables routed outside the skin of the ship shall be EM shielded or otherwise treated to prevent hull penetration EMI as described in the following paragraphs.

5.3.1.1 Shielded cable. Coaxial cables and cables with inherent overall shielding shall be grounded as follows:

a. Cable end terminations. Shielded cables shall be fabricated using the appropriate coaxial connector(s) or connector EMI backshells to bond the cable/coax outer braid/shield, or cable/conduit braid/shield 360 degrees at each end. The connector EMI backshells shall be in accordance with SAE-AS85049 or equivalent.

b. Hull penetration point. Shielded cables shall be 360-degree bonded at the point of entry into the hull, superstructure, deck, bulkhead, shielded compartment, or wireway trunk (see 5.3.2).

5.3.1.2 Unshielded cable. Unshielded cables that exceed 3 feet of exposed length in topside areas shall be EM shielded or filtered as required to prevent cable penetration EMI.

a. Installed cable. Unshielded fixed-installed cables that exceed 3 feet of exposed length in topside areas shall have the entire exposed length routed within a wireway trunk, rigid (pipe) or flexible conduit. Use of rigid conduit is preferred to flexible metal conduit where practical.

b. Portable cable. Unshielded portable cables exposed in topside areas and exceeding 3 feet in length, such as those for sound-powered phone and remote handsets or headsets, shall have an EM filter installed when required (see figure 1).

5.3.1.3 Wireway trunks. Wireway trunks shall be constructed and installed as shown on figure 2.

Source: http://www.assistdocs.com -- Downloaded: 2010-01-07T18:10Z
Check the source to verify that this is the current version before use.

a. Wireway trunks may contain both shielded and unshielded cables.

b. Where an unshielded cable exits the wireway trunk, add-on shielding such as rigid or flexible metal conduit shall be added to the weather-exposed cable.

5.3.2 Hull penetration EMI control. The electrical bonding resistance of hull penetrations to ground potential for EMI control shall be 15 milliohms or less, including the cumulative effect of all faying surface interfaces, and obtained by the using the following methods.

5.3.2.1 Bonding metallic hull-penetrators. The outer perimeter of all cable shields and metallic conduit, waveguide and pipes penetrating the hull (or shielded compartments) shall be bonded to hull ground and provide a 360-degree peripheral bond at the penetration point as shown on figures 3 through 7.

5.3.2.1.1 Rigid conduit. The ends of rigid conduit shall be circumferentially bonded to the ground plane.

5.3.2.1.2 Flexible metal conduit. Flexible metal conduit systems installed in topside areas shall be in accordance with MIL-PRF-24758.

5.3.2.1.3 Waveguides, pipes, tubing, and exhaust stacks. Waveguides, pipes, metal tubing, and exhaust stacks routed in topside areas and penetrating a weather deck or bulkhead shall be grounded at the penetration point as shown on figure 8 for waveguide grounding. Pipes circumferentially welded or threaded at penetration points are properly grounded.

a. Pipes. Pipes that are not circumferentially welded shall be grounded 360 degrees at the point of penetration.

b. Turbine exhaust stacks. Turbine exhaust stacks shall be grounded at the weather penetration point using four, Type I bond straps spaced at 90-degree intervals.

c. Diesel exhaust stacks. Diesel exhaust stacks shall be grounded at the weather penetration point using two, Type I bond straps spaced at 180-degree intervals.

5.3.3 Below decks cable and flexible metal conduit installations. All below decks cables shall be separated, shielded, and routed in accordance with NAVSEA S9407-AB-HBK-010 to prevent cable-coupled EMI. Flexible metal conduit for use below deck shall be in accordance with NAVSEA S9407-AB-HBK-010.

5.3.3.1 Below deck flexible metal conduit bonding and grounding methods. Flexible shielding metal conduit shall be grounded using a Type V (modified Type IV) bond strap. One end of the bond strap is attached to the conduit braid by means of a hose clamp (with worm-gear adjustment), and the other end is attached, typically, to a stud at ground potential as shown in figure 9.

a. For single-point grounding, the rubber jacket of Type 2 conduit shall be cut away to expose the braid at the area to be grounded in order to facilitate attaching the bond strap.

b. For multi-point grounding, unjacketed conduit (Type 1) greater than 10 feet in length shall be bonded to ground potential at a point not greater than 5 feet from each end. Class B bonding is acceptable; however, where it is not inherent in the installation of the conduit, the Type V (modified Type IV) bond straps are required.

5.3.3.2 Termination and coupling of Type 2 conduit. A Type 2 conduit installation shall be insulated from the ground plane except at a single point specified in the installation drawings. The following installation procedures are provided to ensure that inadvertent grounding of the conduit does not occur.

a. Couplings. When two lengths of Type 2 conduit are to be coupled by means of a metallic conduit-to-conduit coupling, the rubber jacket shall be cut back a sufficient amount to allow for metal-to-metal contact. The resulting joint shall then be enclosed in heat shrinkable tubing, or in a heat-shrinkable sleeve, or equivalent. Note: The tubing or sleeve may also be used to cover a damaged rubber jacket, providing the conduit itself is undamaged.

b. End-fittings. As with couplings, the rubber jacket shall be cut back to allow for metal-to-metal contact between conduit and fitting. If insulation is required, the assembly shall be covered with the heat-shrinkable tubing or sleeve mentioned above.

Source: http://www.assistdocs.com -- Downloaded: 2010-01-07T18:10Z
Check the source to verify that this is the current version before use.

5.3.3.3 Shielded multi-conductor cables. The overall shield(s) of multi-conductor cables shall be peripherally grounded using EMI backshells assembled in accordance with MIL-STD-2003-5 or equivalent.

5.4 EMP protection. When EMP protection requirements are invoked, the EMP protection requirements shall take precedence over the EMI reduction requirements specified in 5.3. However, this does not obviate the responsibility of meeting the EMC requirements of MIL-STD-464. The requirements specified in 5.4.1 through 5.4.5 shall apply to metallic hull surface ships on which EMP protection has been specifically authorized. For composite ships or structures integrated in metallic hull ships a PPD (see 4.5) shall be developed to address the EMP requirements of bonding and grounding. The grounding effectiveness of the connector/backshell/cable shield system shall not be less than 60 dB over a frequency range of 100 kHz to 100 MHz. PCI testing shall be used to measure the grounding effectiveness of the connector/backshell/cable shield system installation.

5.4.1 Cables. Except as noted below, all cables routed in topside areas shall be electromagnetically shielded and grounded at deck and superstructure penetrations. The shield of coaxial cable or overall shielded cable and shielding conduit terminating at topside equipment shall be peripherally grounded using coaxial connectors, EMI backshells in accordance with SAE-AS85049 or equivalent, or conduit termination fittings. Additionally, the shield and conduit shall be grounded at the penetration of the hull, superstructure, deck bulkhead, or wireway trunk. Rigid conduit, or flexible metal conduit in accordance with MIL-PRF-24758, shall be installed over single cable runs. Multi-cable runs shall use rigid or flexible metal conduit or wireway trunk. Cables shall be run within the structure of the ship or within enclosed masts wherever possible to minimize the addition of shielding conduit or wireway trunks. Unshielded cables routed internal to the ship shall not be routed within 12 inches of weather doorways, hatchways, and windows unless the cables are routed within shielding conduit or wireway trunks. Cables that terminate at these openings, such as windshield wiper cables, window de-icing cables, and door alarm cables, shall be shielded and grounded as close as practicable to the end fitting. Cables shall not be routed within 10 feet of helicopter or aircraft hangar bay doors or well deck access doors unless they are shielded or routed in conduit or wireway trunk.

5.4.2 Cable shielding performance. The installing activity shall be responsible for ensuring the topside cables specified in ICDs or OEM guidance associated with government furnished equipment and contractor furnished equipment will not degrade the required level of EMP hardness of the ship. Where there is no specified level of shielding for a ship class, the shielding system shall be designed to protect against any known system vulnerabilities against the EMP threat as specified in MIL-STD-464. Where individual system hardness to EMP has not been designed, the following cable shielding guidelines shall be used:

a. Single shielded cables routed less than 18 inches in topside areas do not require additional shielding. However, the overall shield of these cables shall be grounded at the weather penetration points.

b. Cables with a solid overall shield, such as RG-333, do not require additional shielding. However, the overall shield shall be grounded at the weather penetration point.

c. Double shielded cables routed less than 8 feet in topside areas do not require additional shielding. However, the cable shield shall be grounded at the weather penetration point.

d. Additional shielding is required for coaxial and single shielded cables with an exposure greater than 18 inches and double shielded cables with an exposure greater than 8 feet. The additional shielding shall be rigid or flexible metal conduit (MIL-PRF-24758) or metal wireway trunk over the entire length of the cable.

When an alternative to the above items is offered by the installing activity, they shall, through analysis, computer modeling, or scale model testing, verify the expected level of shielding provided by the cable system, and the items shall be approved by the Technical Warrant Authority (see 4.6). The overall shielding provided by the cabling, conduit, shield ground adaptors, wireway trunks, and equipment enclosures shall be equal to or better than the level required for an individual ship hull and superstructure as specified in the ship specification.

5.4.3 Wireway trunks. Wireway trunks shall be constructed to provide 60 dB shielding effectiveness. A typical wireway trunk is shown in figure 2.

5.4.4 Waveguides, pipes, tubing, and exhaust stacks. Waveguides, pipes, tubing, and exhaust stacks grounded as specified in 5.3.2.1.3 are properly grounded for EMP requirements.

Source: http://www.assistdocs.com -- Downloaded: 2010-01-07T18:10Z
Check the source to verify that this is the current version before use.

5.4.5 Terminal protection device. TPDs shall be installed on all HF, VHF, and UHF antennas serving mission critical systems. The TPDs shall be procured that meet the test methods specified in NCS TIB 85-10 or the classified EMP environment referenced in MIL-STD-464 and defined in MIL-STD-2169.

5.4.6 EMP protection, composite structure. When EMP requirements are called out for composite ships or structures, a PPD to address the general EMP requirements shall be developed. If it cannot be shown by analysis or test that the composite structure meets EMP requirements, the interior of the structure shall be treated as being in a topside environment for electromagnetic considerations.

5.5 Superstructure blockage and reflections. Superstructure EM blockage and reflections shall be controlled for minimal affect on system operations. The following design and production practices shall be implemented to minimize blockage and reflections.

5.5.1 Topside configuration drawings. Superstructure, antennas, and topside-mounted equipment shall be located in accordance with the specified Topside Antenna Arrangement and Configuration drawings.

5.5.2 Flat and reflective surfaces. Flat surfaces and corner reflectors subject to illumination by main-beam transmit signals from directional antennas shall be avoided in developing ICDs and fabricating topside structure.

a. Round stock and pipe. To diffuse and scatter reflections, round stock and pipe shall be used as a general rule in the design and fabrication of mast stanchions, supports and equipment foundations that will be illuminated by the main beam of a directional transmit antenna.

b. Tilted/angled installation. Antenna mounting base(s) or foundation(s) shall be fabricated to offset, angle or tilt the antenna as necessary to minimize coupling between nearby antennas; to isolate antennas from nearby metallic structure; and to enhance antenna radiation and reception patterns.

c. Radar-absorbent material (RAM). RAM shall be installed where necessary to control harmful EM reflections.

5.6 Equipment-generated EMI prevention. Narrowband filters, preselectors, multicouplers, etc., as required to protect wideband receiver front end stage(s) shall be installed or inserted between the associated antenna(s) and shipboard LF, MF, HF, VHF, and UHF communications, intelligence, weather facsimile, navigation, and ships entertainment receiving equipment. These devices and other EMI mitigated electronic equipment that require high attenuation/isolation to RF levels shall be grounded by Class B or C grounding method that provides the required MIL-STD-464 RF grounding resistance of 2.5 milliohms DC from the electronic unit to the ships ground plane.

5.6.1 RF tuned receiver front-end stages. No additional protection shall be required for LF, MF, HF, VHF, or UHF receivers with an RF-tuned front-end stage.

5.6.2 LF-MF receiver(s), but no in-band transmitter(s). No additional protection shall be required for LF and MF receivers if:

a. The ship has no onboard LF and MF transmit capability, and

b. The selectivity of the LF/MF receiver's front-end stages prevents entry of out-of-band HF and higher frequency signals.

5.6.3 BBN suppression; portable electrical tools. Arc suppression filters shall be provided across the commutator/brushes of all electric motors.

5.7 Electrical safety; personnel shock hazard prevention. All shipboard equipment operating from an external electrical power source of 30 volts or more, including COTS or NDI, shall provide personnel shock hazard protection in accordance with the following and Appendix B.

5.7.1 Portable and mobile-transportable electrically-powered equipment. Shock hazard protection for portable and mobile-transportable electrically-powered equipment to be used aboard ship shall be provided through:

Source: http://www.assistdocs.com -- Downloaded: 2010-01-07T18:10Z
Check the source to verify that this is the current version before use.

a. Built-in grounding through a 3-conductor power cord and 3-pronged plug for electrical equipment with a conductive case or exposed conductive elements.

b. Use of a non-conducting enclosure/case. Electrical equipment with a double-insulated or non-conductive case needs no safety ground.

5.7.1.1 Electrical equipment with a conductive case. Portable or mobile-transportable electrical equipment with a conductive case or exposed conductive elements shall require a 3-conductor power cable and 3-pronged plug. The third conductor shall be attached to the ground prong of the plug and the equipment frame or chassis. For acceptance, an insulation resistance test shall determine:

a. 1 megohm (minimum) resistance between the conductive case and each active power conductor prong.

b. 0.1 ohm (maximum) resistance between the conductive case and the power cord ground prong.

5.7.1.2 Electrical equipment with a non-conductive case. Portable or mobile-transportable electrical equipment with a non-conductive case requires no electrical safety ground. Unless a grounding wire is required for EMI control, a 2-conductor power cord and 2-pronged plug is acceptable.

5.7.2 Fixed-installed, electrically-powered equipment. Shock hazard protection for fixed-installed, electrically-powered equipment to be used aboard ship shall be provided through:

a. A hard-wired power cord.

b. The mounting hardware to provide Class B or C bonding to ground.

c. Use of a non-conducting enclosure/case.

d. A combination of a through c above.

5.7.3 Fixed rack mounted or enclosure mounted electrically powered equipment. Shock hazard protection for equipment, including COTS and NDI equipment, installed in a rack mount or internal to an equipment enclosure shall be provided through one of the grounding methods or combinations of methods stated in 5.7.1 or 5.7.2.

6. NOTES

(This section contains information of a general or explanatory nature that may be helpful, but is not mandatory.)

6.1 Intended use. This standard specifies EMI/IMI reduction techniques, EMP protection measures, personnel safety grounding requirements and methods for installing shipboard cable ground systems. Appendix A provides guidance concerning installation and testing associated with EMI control.

6.2 Acquisition requirements. Acquisition documents should specify the following:

a. Title, number, and date of this standard.

b. Quality assurance provisions (see 4.7 and 6.3).

6.3 Quality assurance provisions.

6.3.1 In-progress inspection. An in-progress inspection conducted to assess the shipboard bonding, grounding, and other techniques for EMC, EMP mitigation, and safety as specified by this standard. This inspection consists of spot checking installation procedures, methods, and materials to determine compliance with the applicable requirements specified herein. The inspection is to determine the following:

a. Bond straps, non-metallic materials and ground systems are installed in accordance with requirements for personnel safety.

b. Quality materials, methods, and workmanship are used.

c. Each installation will satisfy the intent and purpose of the requirement.

d. Class of bond, and type of bond strap (for Class C) is as specified herein.

e. Installation of strap does not interfere with tightness of enclosure.

f. Installation of strap does not weaken structure or item to which the strap is attached.

Source: http://www.assistdocs.com -- Downloaded: 2010-01-07T18:10Z
Check the source to verify that this is the current version before use.

g. Bond strap will not restrict the movement of any hinged or pinned item and installation of bond strap will not place the bond strap in a binding or restrictive position that will lead to early breakage of the strap.

h. Bond straps and non-metallic items located in topside areas are fabricated, installed, and treated as specified herein to prevent deterioration through corrosion, oxidation or weathering.

6.3.2 Final inspection. Conducted after completion of all required installations to determine that all requirements specified for the particular ship involved have been accomplished and that the quality assurance provisions of 6.3 have been met.

6.3.3 Inspection responsibility. Unless otherwise required by the contract, the contractor is responsible for performing the inspections.

6.3.4 Inspector certification. The contractor is to certify that the inspector is qualified to perform the inspections specified herein.

6.3.5 Government verification. All requirements specified by this standard are subject to government verification at any time.

6.4 RF impedance measurement. A Type I bond strap will provide less than 25 ohms impedance at 30 MHz. There is no need to perform routine RF impedance measurements on every bond for acceptance; routine measurement to demonstrate the RF impedance of any individual bond during the acceptance process should never be necessary. However, in the event any system's performance is erratic during operational or acceptance testing and problem indications are symptomatic of poor electrical grounding, this measurement specification is included to help pinpoint or eliminate grounding as the cause.

6.5 Subject term (key word) listing.

Broadband noise (BBN)

Cable ground system

Intermodulation interference (IMI)

Junction, nonlinear

Penetration

Weatherproofing

Wireway trunks

6.6 Changes from previous issue. Marginal notations are not used in this revision to identify changes with respect to the previous issue due to the extensiveness of the changes.

Source: http://www.assistdocs.com -- Downloaded: 2010-01-07T18:10Z
Check the source to verify that this is the current version before use.

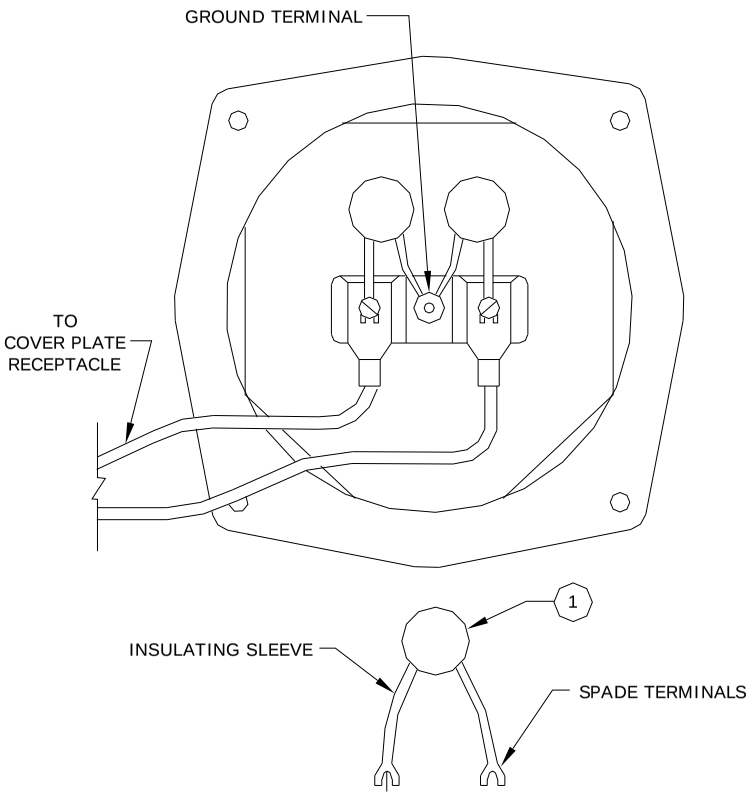

FILTER PREPARED FOR INSTALLATION

LIST OF MATERIAL			
ITEM NO.	PART	SPECIFICATION	NOTE
1	CAPACITOR, P/N CRK05BX470K, 200V (OR EQUIVALENT)	MIL-PRF-39014/1	1, 2

NOTES:

1. FILTER CAPACITORS AS SHOWN IN THIS FIGURE ARE APPLICABLE ONLY TO SOUND-POWERED PHONES. FOR OTHER APPLICATIONS WHERE UNSHIELDED PORTABLE CABLE MAY REQUIRE EM FILTERING, SUCH AS FOR RADIO-TELEPHONE HEADSETS/HANDSETS, FILTER CAPACITOR(S) OF DIFFERENT VALUE MAY BE REQUIRED.

2. THESE FILTER CAPACITORS ARE INSTALLED FOR THE PURPOSE OF FILTERING RF RADIATIONS FROM SHIPBOARD ANTENNAS WHICH ARE COUPLED BELOW DECKS VIA THE UNSHIELDED (VOICE AUDIO SIGNAL) WIRES OF PORTABLE TELEPHONE HEADSETS WHEN USING A TOPSIDE-MOUNTED SOUND-POWERED PHONE JACK.

3. ENSURE FILTER CAPACITORS LEADS ARE AS SHORT AS POSSIBLE.

FIGURE 1. EMI filter capacitor installation in sound powered telephone boxes.

Source: http://www.assistdocs.com -- Downloaded: 2010-01-07T18:10Z
Check the source to verify that this is the current version before use.

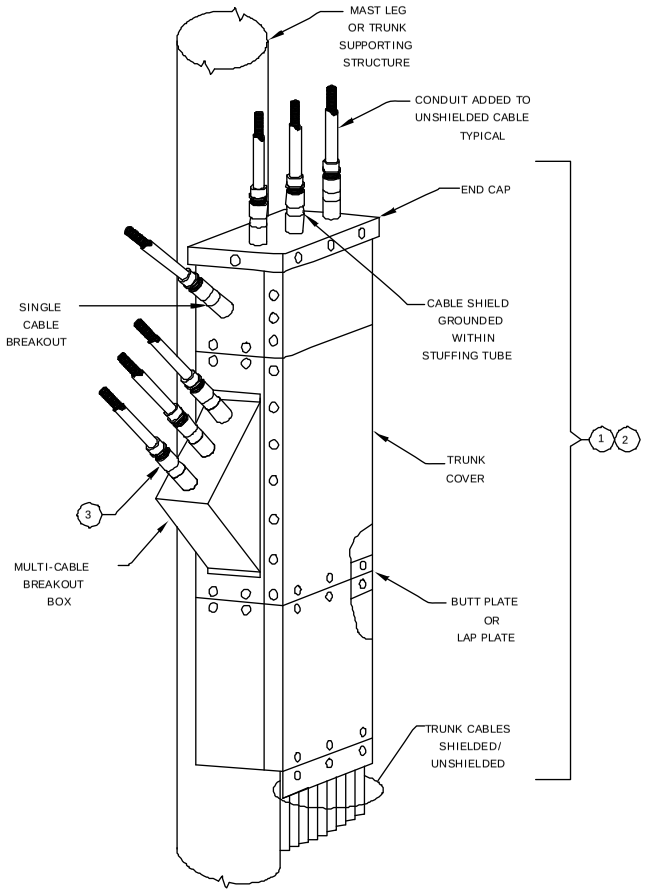

LIST OF MATERIAL			
ITEM NO.	PART	SPECIFICATION	NOTE
1	SHEET METAL, STEEL	MIL - S -22698	1
2	SHEET METAL, ALUMINUM	5086-H116	1
3	SWAGE TUBE	MIL - S -24235	4

NOTES:

1. BASIC TRUNK DESIGN SHALL BE IN ACCORDANCE WITH 5.3.1.3 AFTER CABLE TYPES, AND GROUNDING AND SHIELDING REQUIREMENTS HAVE BEEN DETERMINED.

2. FABRICATE END CAP AND BREAKOUT BOXES, AS REQUIRED, TO ACCOMODATE THE NUMBER AND TYPE OF CABLES THAT EXIT THE WIREWAY TRUNK. HOLES SHALL BE SIZED TO FIT THE REQUIRED STUFFING TUBES AND CONDUIT TERMINATION FITTINGS.

3. INSTALL CABLES FROM BELOW DECK EQUIPMENT TO TOPSIDE EQUIPMENT LOCATION THROUGH END CAPS, BREAKOUT BOXES, STUFFING TUBES AND HOLES FOR CONDUIT FITTINGS.

4. CONDUIT TERMINATION FITTINGS OR BULKHEAD FEED THRU FITTINGS MAY BE USED FOR CABLE EXIT IN LIEU OF STANDARD SWAGE TUBES.

5. MEASURE AND CUT SHIELDING CONDUIT TO LENGTHS REQUIRED.

6. INSTALL CABLE SHIELD GROUNDING MATERIALS AND FLEXIBLE SHIELDING CONDUIT AS SPECIFIED HEREIN. WEATHERPROOF ALL FITTINGS AS SPECIFIED FOR CORROSION PROTECTION.

7. ALL FITTINGS ARE DEPICTED PRIOR TO WEATHERPROOFING.

8. AFTER COVERS ARE INSTALLED, WIREWAY TRUNK SHALL BE PRIMED AND PAINTED.

FIGURE 2. Typical wireway trunk.

Source: http://www.assistdocs.com -- Downloaded: 2010-01-07T18:10Z
Check the source to verify that this is the current version before use.

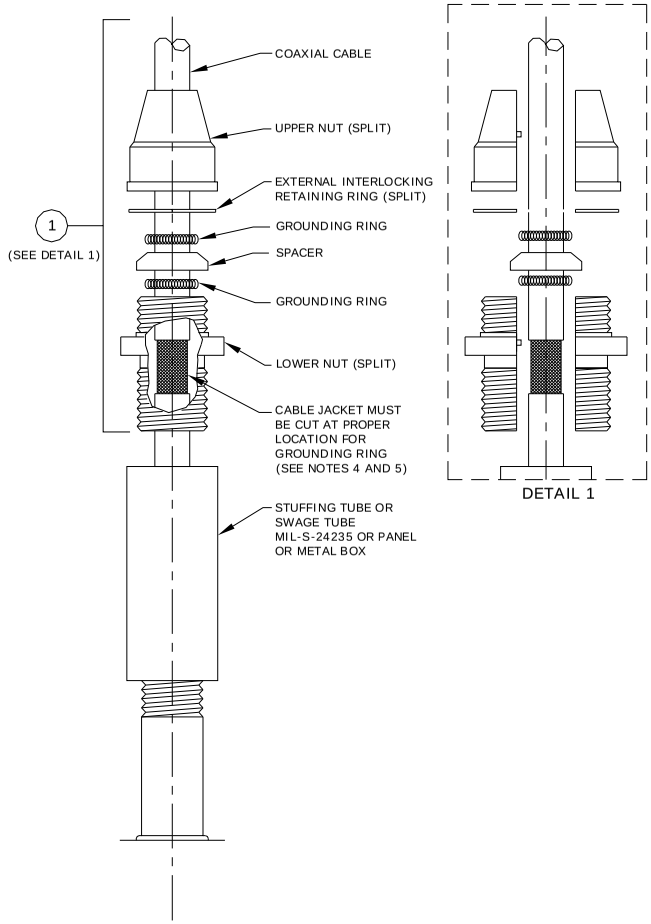

LIST OF MATERIAL			
ITEM NO.	PART	SPECIFICATION	NOTE
1	SPLIT RING GROUNDING ADAPTER	COMM	1

NOTES:

1. THIS METHOD OF CABLE SHIELD GROUNDING APPLIES TO EXISTNG CABLE INSTALLATIONS WHERE GROUNDING IS REQUIRED AND CABLE REPLACEMENT IS NOT OTHERWISE AUTHORIZED.
2. ATTACH UPPER NUT APPROXIMATELY 12 INCHES ABOVE THE STUFFING OR SWAGE TUBE. ATTACH GROUNDING RINGS AND SPACER BELOW THE UPPER NUT AS SHOWN IN THE FIGURE. ATTACH LOWER NUT BELOW THE LOWER GROUNDING RING. TIGHTEN UPPER NUT ONTO LOWER NUT UNTIL THEY ARE THREADED LIGHTLY TOGETHER SO ADAPTER WILL MOVE FREELY ON THE CABLE.
3. PACK STUFFING TUBE AS REQUIRED, COAT THREADS OF LOWER NUT WITH ANTISEIZE COMPOUND OF A-A-59313. THEN LOWER THE ADAPTER AND THREAD INTO STUFFING TUBE, TIGHTENING LOWER NUT AS REQUIRED FOR PACKING. UNSCREW UPPER NUT FROM LOWER NUT AND MOVE UPPER NUT AND THREE INNER COMPONENTS SEVERAL INCHES UP THE CABLE AND TAPE. MAKE CUT IN THE CABLE JACKET AT A LOCATION WHICH WILL ENSURE THAT THE GROUND RINGS MAKE CONTACT WITH THE EXPOSED SHEILD WHEN THE LOWER AND UPPER NUTS ARE TIGHTENED.
4. REMOVE CUT SECTION OF CABLE JACKET AND APPLY A COATING OF ANTISEIZE COMPOUND OF A-A-59313 TO THE EXPOSED CABLE SHIELD AND TO THE THREADS OF THE UPPER NUT. LOWER THE UPPER NUT AND HAND TIGHTEN FIRMLY, MAKING SURE THE GROUND RINGS FALL INTO THE SLOT CUT IN THE CABLE JACKET.
5. THIS TYPE OF INSTALLATION DOES NOT REQUIRE PERIODIC TIGHTENING OF THE GLAND NUT (GROUNDING ADAPTER) FOR WEATHER SEALING.
6. THE THREADS OF THE LOWER NUT SHALL BE CHOSEN TO MATE WITH STUFFING TUBES, METALLIC CONNECTOR BACKSHELLS, PANELS OR METAL BOXES DEPENDING ON THE SPECIFIC APPLICATION.

FIGURE 3. Cable shield grounding (split SGA).

Source: http://www.assistdocs.com -- Downloaded: 2010-01-07T18:10Z
Check the source to verify that this is the current version before use.

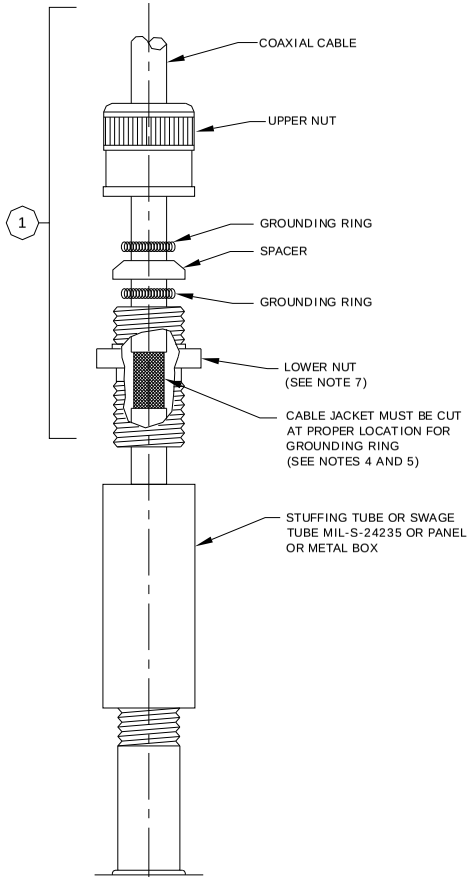

LIST OF MATERIAL			
ITEM NO.	PART	SPECIFICATION	NOTE
1	ADAPTER, GROUNDING	COMM	1

NOTES

1. THIS METHOD OF CABLE SHIELD GROUNDING APPLIES TO NEW INSTALLATIONS AND TO RETROFIT CABLES THAT CAN BE REMOVED AND REROUTED THROUGH THE GROUNDING ADAPTER.

2. FOR NEW CABLE INSTALLATION:
PRIOR TO PULLING CABLE THROUGH STUFFING TUBE, REMOVE GLAND NUT AND REPLACE WITH THE ADAPTER, LIGHTLY THREADING THE ADAPTER ONTO TOP OF TUBE, PULL CABLE THROUGH ADAPTER AND STUFFING TUBE MAKING SURE CABLE DOES NOT DAMAGE ADAPTER COMPONENTS. ADAPTER CHOSEN MUST MATCH TUBE SIZE (A,B,C,ETC.)

   FOR RETROFIT INSTALLATION:
REMOVE CABLE FROM END TERMINATION AND REMOVE FROM ALL CABLE HANGERS DOWN TO THE TOP OF STUFFING TUBE. REMOVE STUFFING TUBE GLAND NUT AND SLIDE OFF OF CABLE. CHOOSE PROPER SIZE GROUNDING ADAPTER AND SLIDE DOWN OVER CABLE LIGHTLY THREADING ADAPTER INTO STUFFING TUBE IN PLACE OF GLAND NUT . REINSTALL CABLE IN HANGERS AND RECONNECT TO TERMINATING EQUIPMENT.

3. AFTER CABLE HAS BEEN PERMANENTLY INSTALLED IN PLACE AND ALL HANGERS ARE TIGHTENED, UNSCREW ADAPTER AND MOVE IT APPROXIMATELY 12 INCHES UP THE CABLE AND TAPE. ENSURE UPPER NUT AND LOWER NUT ARE THREADED LIGHTLY TOGETHER SO ADAPTER WILL MOVE FREELY ON THE CABLE.

4. PACK STUFFING TUBE AS REQUIRED, COAT THREADS OF LOWER NUT WITH ANTISEIZE COMPOUND OF A-A-59313. THEN LOWER THE ADAPTER AND THREAD ONTO STUFFING TUBE, TIGHTENING LOWER NUT AS REQUIRED FOR PACKING. UNSCREW UPPER NUT FROM LOWER NUT AND MOVE UPPER NUT AND THREE INNER COMPONENTS SEVERAL INCHES UP THE CABLE AND TAPE. MAKE CUT IN THE CABLE JACKET AT A LOCATION WHICH WILL ENSURE THAT THE GROUND RINGS MAKE CONTACT WITH THE EXPOSED SHIELD WHEN THE LOWER AND UPPER NUTS ARE TIGHTENED.

5. REMOVE CUT SECTION OF CABLE JACKET AND APPLY A COATING OF ANTISEIZE COMPOUND OF A-A-59313 TO THE EXPOSED CABLE SHIELD AND TO THE THREADS OF THE UPPER NUT. LOWER THE UPPER NUT AND HAND TIGHTEN FIRMLY MAKING SURE THE GROUND RINGS FALL INTO THE SLOT CUT IN THE CABLE JACKET.

6. THIS TYPE OF INSTALLATION DOES NOT REQUIRE PERIODIC TIGHTENING OF THE GLAND NUT (GROUNDING ADAPTER) FOR WEATHER SEALING.

7. THE THREADS OF THE LOWER NUT SHALL BE CHOSEN TO MATE WITH STUFFING TUBES, METALLIC CONNECTOR BACKSHELLS, PANELS OR METAL BOXES DEPENDING ON THE SPECIFIC APPLICATION.

FIGURE 4. Cable shield grounding.

Source: http://www.assistdocs.com -- Downloaded: 2010-01-07T18:10Z
Check the source to verify that this is the current version before use.

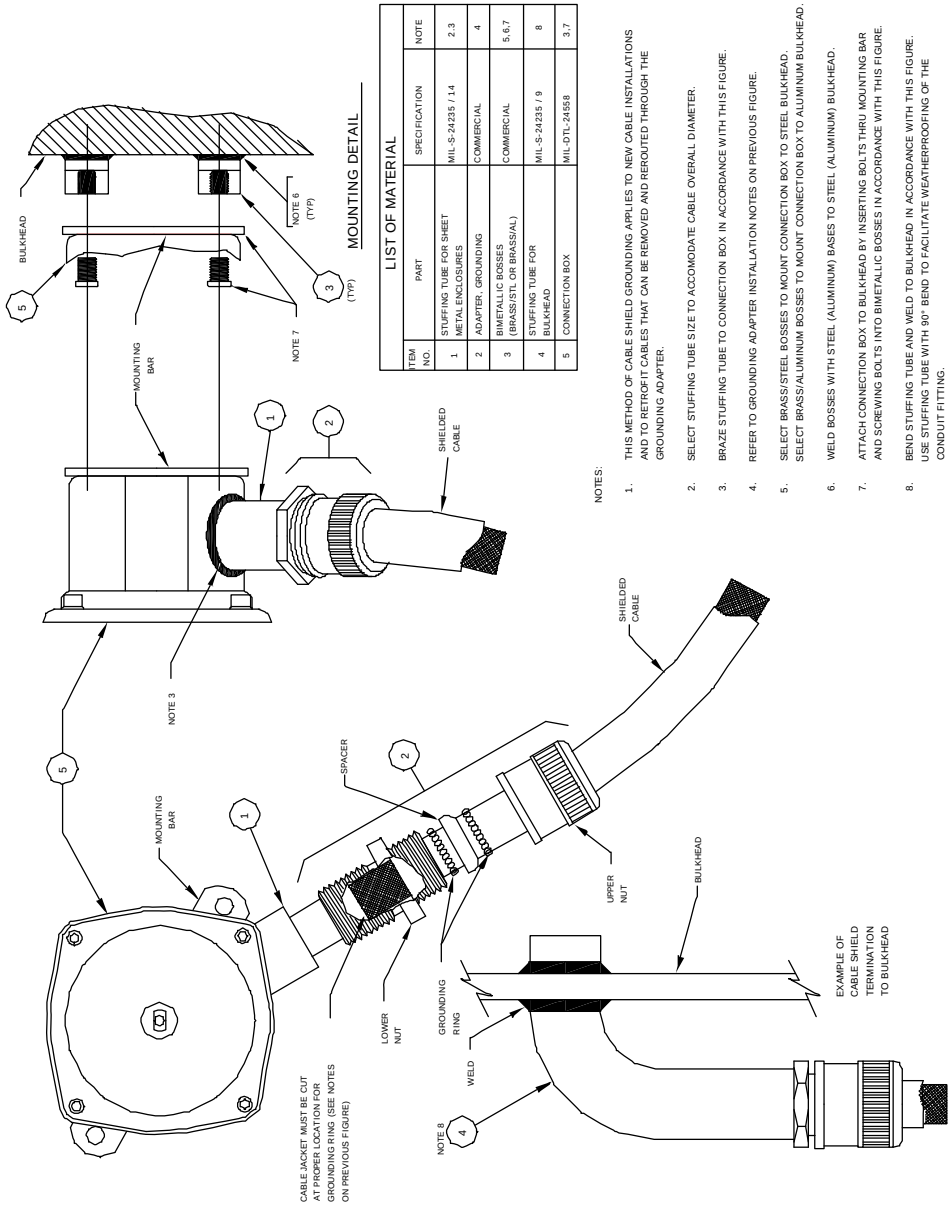

MOUNTING DETAIL

LIST OF MATERIAL

ITEM NO.	PART	SPECIFICATION	NOTE
1	STUFFING TUBE FOR SHEET METAL ENCLOSURES	MIL-S-24235 / 14	2,3
2	ADAPTER, GROUNDING	COMMERCIAL	4
3	BIMETALLIC BOSSES (BRASS/STL OR BRASS/AL)	COMMERCIAL	5,6,7
4	STUFFING TUBE FOR BULKHEAD	MIL-S-24235 / 9	8
5	CONNECTION BOX	MIL-DTL-24558	3,7

NOTES:

1. THIS METHOD OF CABLE SHIELD GROUNDING APPLIES TO NEW CABLE INSTALLATIONS AND TO RETROFIT CABLES THAT CAN BE REMOVED AND REROUTED THROUGH THE GROUNDING ADAPTER.
2. SELECT STUFFING TUBE SIZE TO ACCOMODATE CABLE OVERALL DIAMETER.
3. BRAZE STUFFING TUBE TO CONNECTION BOX IN ACCORDANCE WITH THIS FIGURE.
4. REFER TO GROUNDING ADAPTER INSTALLATION NOTES ON PREVIOUS FIGURE.
5. SELECT BRASS/STEEL BOSSES TO MOUNT CONNECTION BOX TO STEEL BULKHEAD. SELECT BRASS/ALUMINUM BOSSES TO MOUNT CONNECTION BOX TO ALUMINUM BULKHEAD.
6. WELD BOSSES WITH STEEL (ALUMINUM) BASES TO STEEL (ALUMINUM) BULKHEAD.
7. ATTACH CONNECTION BOX TO BULKHEAD BY INSERTING BOLTS THRU MOUNTING BAR AND SCREWING BOLTS INTO BIMETALLIC BOSSES IN ACCORDANCE WITH THIS FIGURE.
8. BEND STUFFING TUBE AND WELD TO BULKHEAD IN ACCORDANCE WITH THIS FIGURE. USE STUFFING TUBE WITH 90° BEND TO FACILITATE WEATHERPROOFING OF THE CONDUIT FITTING.

FIGURE 5. Cable shield grounding.

Source: http://www.assistdocs.com -- Downloaded: 2010-01-07T18:10Z
Check the source to verify that this is the current version before use.

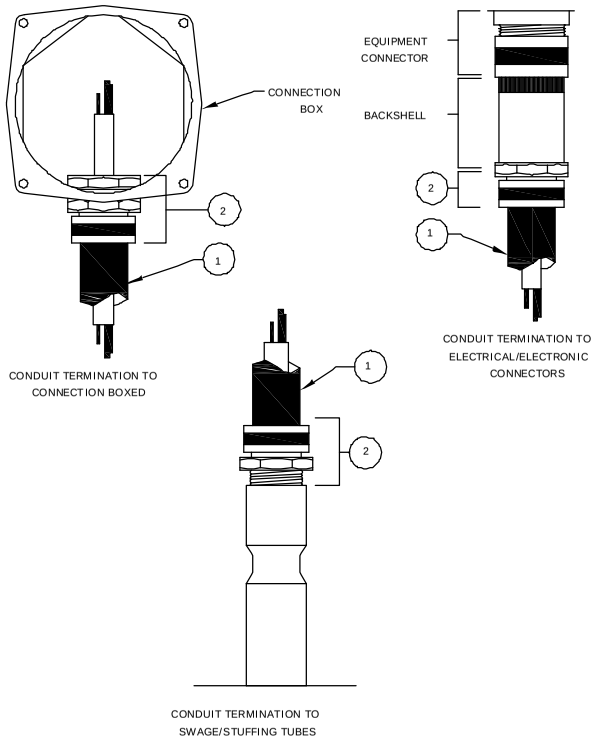

LIST OF MATERIAL			
ITEM NO.	PART	SPECIFICATION	NOTE
1	CONDUIT, FLEXIBLE	MIL - PRF -24758	2, 3, 4
2	CONDUIT, FLEXIBLE	MIL - PRF -24758	4, 5

NOTES:

1. THIS METHOD OF CABLE SHIELDING APPLIES TO NEW CABLE INSTALLATIONS AND TO EXISTING CABLE INSTALLATION WHERE THE CABLE CAN BE REMOVED FROM THE TERMINATING EQUIPMENT AND HANGERS, AND ROUTED THROUGH THE CONDUIT. INSTALLATION OF CONDUIT AND FITTINGS IN ACCORDANCE WITH THIS FIGURE WILL PREVENT CABLE-PENETRATION EMI.
2. SELECT CONDUIT SIZE TO ACCOMODATE CABLE OVERALL DIAMETER.
3. THE MINIMUM BEND RADIUS OF CONDUIT SHALL NOT BE EXCEEDED.
4. ELBOW FITTINGS, 45 OR 90 DEGREE, SHALL BE USED, WHERE NEEDED, TO REDUCE STRAIN ON CONNECTORS AND CONDUIT. SELECT CONDUIT FITTINGS TO MATCH CONDUIT SIZE AND TERMINATING EQUIPMENT.
5. CONDUIT FITTINGS SHALL BE SELECTED TO AVOID DISSIMILAR METALS. ANTISEIZE COMPOUND SHALL BE USED AT ALL METAL-TO-METAL JUNCTIONS AND ALL TOPSIDE JUNCTIONS SHALL BE WEATHERPROOFED.

FIGURE 6. Cable shielding method, flexible metal conduit.

Source: http://www.assistdocs.com -- Downloaded: 2010-01-07T18:10Z
Check the source to verify that this is the current version before use.

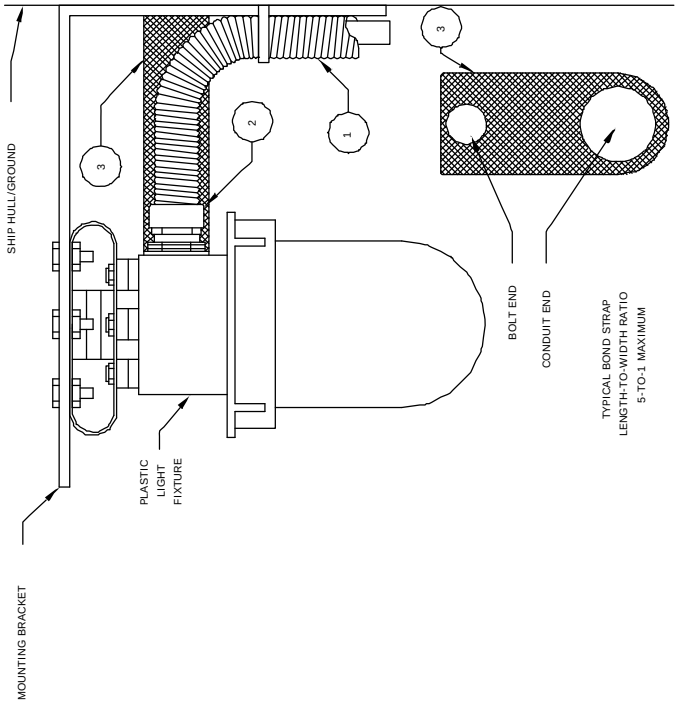

LIST OF MATERIAL

ITEM NO.	PART	SPECIFICATION	NOTE
1	CONDUIT, FLEXIBLE	MIL - PRF -24758	
2	FITTING CONDUIT	MIL - PRF -24758	1
3	BOND STRAP, TYPE II	MIL - DTL -24749	1, 2

NOTES:

1. THIS METHOD SHALL BE USED TO GROUND CONDUIT TERMINATING AT NONMETALLIC FIXTURES.
2. CONDUIT FITTING SHALL MAKE PERIPHERAL CONTACT WITH A TYPE II CRES BOND STRAP.
3. THE BOND STRAP WILL BE CONNECTED TO THE SHIP/HULL GROUND. THE BOND STRAP/HULL MATING SURFACE SHALL BE PREPARED IN ACCORDANCE WITH 5.1.3.1.c.

FIGURE 7. Cable shielding method, flexible metal conduit.

Source: http://www.assistdocs.com -- Downloaded: 2010-01-07T18:10Z
Check the source to verify that this is the current version before use.

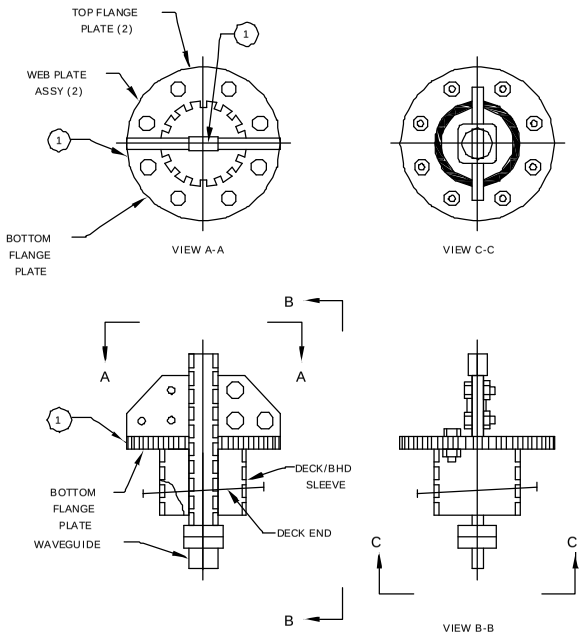

LIST OF MATERIAL			
ITEM NO.	PART	SPECIFICATION	NOTE
1	GASKET MATERIAL, CONDUCTIVE	COMMERCIAL	1, 2

NOTES:

1. THE CONDUCTIVE ELEMENT OF THE GASKET SHALL BE CRES OR COPPER -NICKEL WIRE FIBERS PROVIDING CONDUCTIVITY ACROSS THE THICKNESS DIMENSION. THE STABILIZING AND SEALING ELEMENT OF THE GASKET SHALL BE EITHER CONDUCTIVE OR FABRICATED SUCH THAT IT DOES NOT PREVENT ELECTRICAL CONTACT BETWEEN MATING SURFACES. IT MUST SEAL AND PRESERVE THE JUNCTION TO PREVENT CORROSION.

2. THE MOUNTING SURFACES IN CONTACT WITH THE GASKET SHALL BE CLEANED TO BRIGHT METAL AND COATED WITH CONDUCTIVE PAINT, A-A-59313 ANTISEIZE COMPOUND OR OTHER SURFACE PRESERVA-TIVE PROIR TO INSTALLATION OF THE GASKET.

3. SPLIT-SLEEVE INSTALLATION SHOWN IS AS DETAILED IN THE NAVY INSTALLATION AND MAINTENANCE BOOK (NIMB) CD-ROM EDITION NSN 0910-LP-003-9770.

FIGURE 8. Waveguides grounding.

Source: http://www.assistdocs.com -- Downloaded: 2010-01-07T18:10Z
Check the source to verify that this is the current version before use.

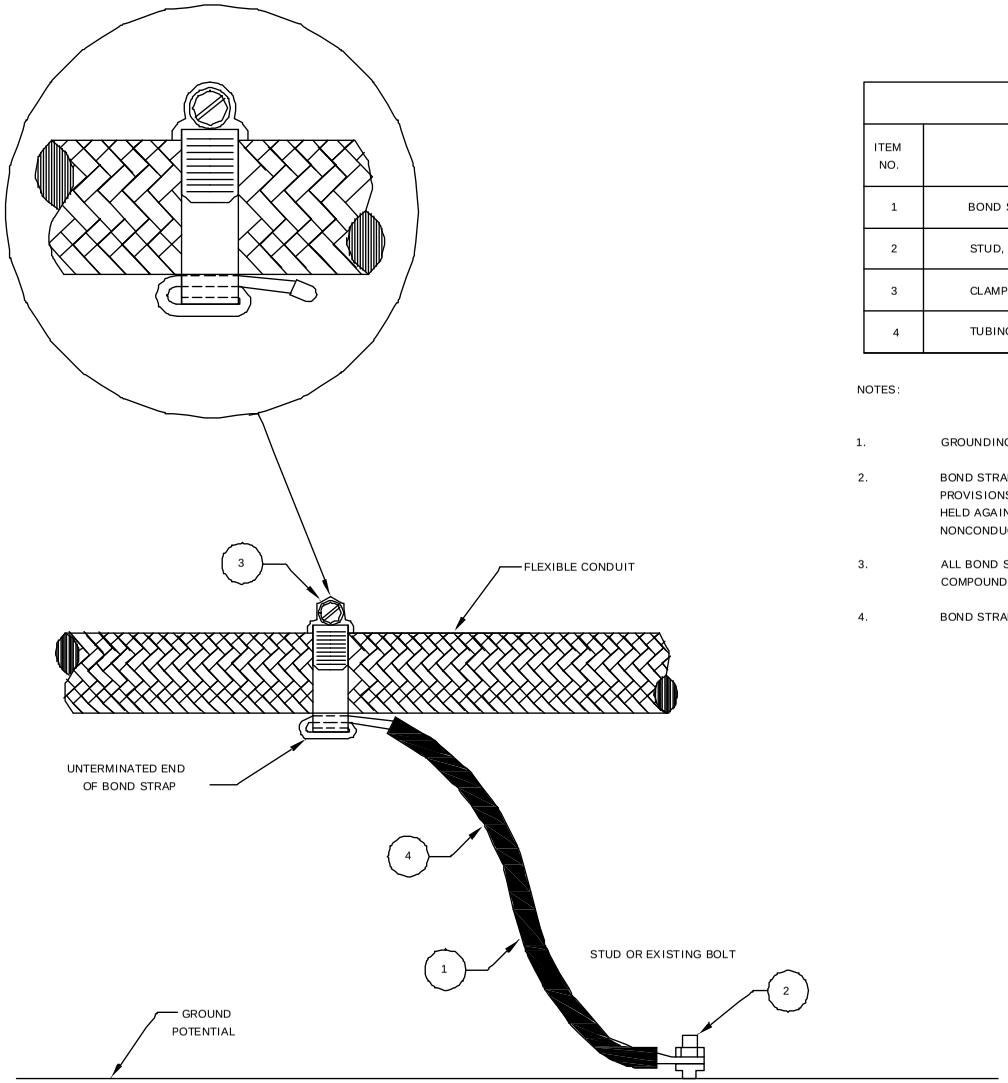

LIST OF MATERIAL			
ITEM NO.	PART	SPECIFICATION	NOTE
1	BOND STRAP, TYPE V		2
2	STUD, COLLAR	MIL - S -24149	1
3	CLAMP, HOSE	A-A-52506	
4	TUBING, PVC	MIL - I -631	4

NOTES:

1. GROUNDING METHOD IN ACCORDANCE WITH FIGURE 11.
2. BOND STRAP SHALL BE TYPE IV EXCEPT ONE END SHALL NOT HAVE PROVISIONS FOR STUD OR BOLT MOUNTING. AREA WHERE BOND STRAP IS HELD AGAINST CONDUIT SHALL BE CLEAR AND FREE OF ANY NONCONDUCTIVE MATERIALS.
3. ALL BOND STRAP CONTACT AREAS SHALL BE COATED WITH ANTISEIZE COMPOUND OF A-A-59313.
4. BOND STRAPS MAY BE ENCASED IN CLEAR PLASTIC PVC TUBING.

FIGURE 9. Method of grounding flexible metal conduit for below decks cable installations.

Source: http://www.assistdocs.com -- Downloaded: 2010-01-07T18:10Z
Check the source to verify that this is the current version before use.

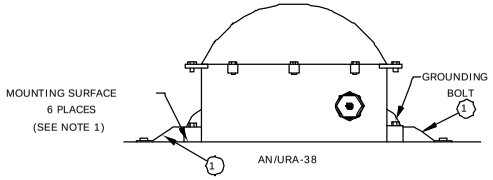

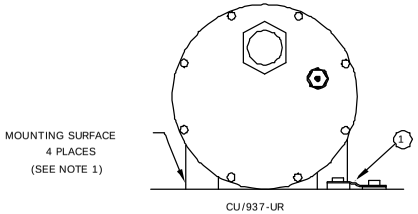

LIST OF MATERIAL			
ITEM NO.	PART	SPECIFICATION	NOTE
1	BOND STRAP, TYPE II	MIL-DTL-24749	1

NOTES:

1. HF ANTENNA TUNER/COUPLERS SHALL BE GROUNDED AS REQUIRED FOR TUNING AND OPERATION. THE MOUNTING SURFACES BETWEEN THE TUNER/COUPLER AND GROUND POTENTIAL SHALL BE CLEAN AND FREE OF CORROSION. A HEAVY COAT OF ANTISEIZE COMPOUND, A-A-59313, SHALL BE APPLIED TO THE CLEANED AREAS AND EXCESS ANTISIEZE SHALL BE REMOVED AFTER BOLTING. ALL AREAS WHERE ANTISEIZE IS APPLIED SHALL BE EDGE-SEALED USING MIL-S-45180 TYPE II SEALING COMPOUND. IN ADDITION TO THE ABOVE CLASS B BOND, ONE TYPE II BOND STRAP SHALL BE INSTALLED ON THE MOUNTING FOOT CLOSEST TO ANTENNA FEED WIRE. BOND STRAP CONNECTION TO GROUND POTENTIAL SHALL BE BY STUD, STUD PAD, OR BOLT. THE CONTACT SURFACE BETWEEN BOND STRAP AND GROUND POTENTIAL SHALL BE AT LEAST EQUAL TO THE WIDTH OF THE BOND STRAP. CONTACT SURFACE AREAS FOR BOND STRAPS SHALL BE CLEANED TO BRIGHT METAL AND COATED WITH ANTISEIZE COMPOUND PRIOR TO BOND STRAP INSTALLATION. ALL HARDWARE AND BOND STRAPS SHALL BE WEATHERPROOFED AFTER INSTALLATION USING MIL-S-45180 TYPE II GASKET COMPOUND.

2. THESE ILLUSTRATIONS SHOW GROUNDING METHODS FOR SPECIFIC HF TUNER/COUPLERS. OTHER TUNERS AND COUPLERS THAT REQUIRE GROUNDING IN ACCORDANCE WITH INSTALLATION CONTROL DRAWINGS SHALL BE GROUNDED USING SIMILAR METHODS.

FIGURE 10. Antenna tuner and coupler grounding.

Source: http://www.assistdocs.com -- Downloaded: 2010-01-07T18:10Z
Check the source to verify that this is the current version before use.

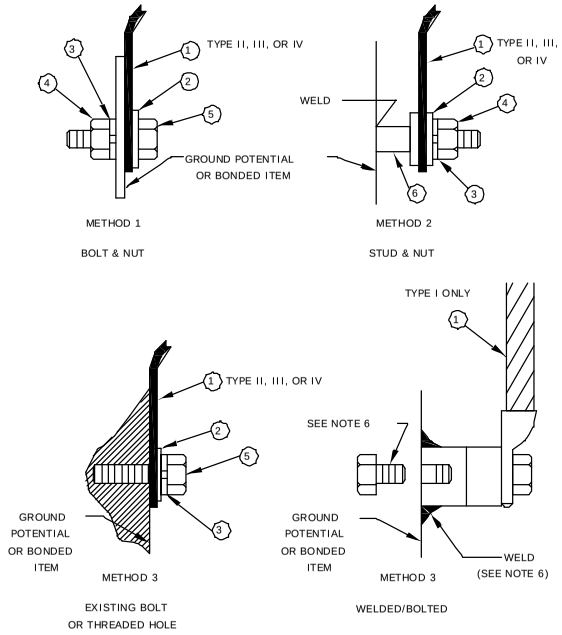

LIST OF MATERIAL			
ITEM NO.	PART	SPECIFICATION	NOTE
1	BOND STRAP	MIL-DTL-24749	1, 2, 4
2	WASHER, FLAT	CRES 316	5
3	WASHER, SPLIT	CRES 316	5
4	NUT, CRES 316	MS 35425 AND FF-N-836	5
5	BOLT, CRES 316	MIL-DTL-1222	5
6	STUD, SHOULDER OR COLLAR	MIL-S-24149	3

NOTES:

1. EXISTING BOLTS, STUDS OR THREADED HOLES MAY BE USED FOR BOND STRAP INSTALLATION.

2. THE INSTALLATION PROCEDURE FOR BOLTED STRAPS PROVIDES FOR CLEAN BRIGHT METAL CONTACT BETWEEN THE BOND STRAP AND THE MATING SURFACE.

3. STUDS USED FOR BOND STRAP ATTACHMENT SHALL BE A COLLAR TYPE. TO PERMIT WELDING, STUD MATERIAL SHALL CORRESPOND TO THE MATING SURFACE MATERIAL; ALUMINUM STUDS FOR ATTACHMENT TO ALUMINUM SURFACES AND STEEL STUDS FOR ATTACHMENT TO STEEL SURFACES.

4. BOLTED BOND STRAP CONNECTIONS SHALL BE WEATHERPROOFED.

5. FOR SHIPBOARD EXTERIOR APPLICATIONS, ITEMS 2, 3, 4 AND 5 SHALL BE OF CORROSION RESISTANT STEEL (CRES 316).

6. THE BOSS OF TYPE I BOND STRAPS MAY BE BOLTED IN PLACE ON EQUIPMENT WHERE WELDING CANNOT BE ACCOMPLISHED. BOLT LENGTH IS CRITICAL. USE THE BOLT SUPPLIED WITH THE BOSS. THE BOLT SHALL NOT CONTACT THE BOTTOM OF THE BOSS THREADED SOCKET.

FIGURE 11. Methods of attaching bond straps.

Source: http://www.assistdocs.com -- Downloaded: 2010-01-07T18:10Z
Check the source to verify that this is the current version before use.

GENERAL GUIDANCE

A.1 SCOPE

A.1.1 Scope. This appendix contains guidance concerning electromagnetic interference control. This Appendix is not a mandatory part of the standard. The information contained herein is intended for guidance only.

A.2 APPLICABLE DOCUMENTS

A.2.1 General. The documents listed in this section are specified in sections 3 or 4 of this appendix. This section does not include documents cited in other sections of this standard or recommended for additional information or as examples. While every effort has been made to ensure the completeness of this list, document users are cautioned that they must meet all specified requirements of documents cited in sections 3 or 4 of this appendix, whether or not they are listed.

A.2.2 Government documents.

A.2.2.1 Specifications, standards, and handbooks. The following specifications, standards, and handbooks form a part of this document to the extent specified therein. Unless otherwise specified, the issues of these documents are those cited in the solicitation or contract.

DEPARTMENT OF DEFENSE STANDARDS

MIL-STD-461	-	Interface Standard, Requirements for the Control of Electromagnetic Interference Characteristics of Subsystems and Equipment

(Copies of these documents are available online at http://assist.daps.dla.mil/quicksearch/ or from the Standardization Document Order Desk, 700 Robbins Avenue, Building 4D, Philadelphia, PA 19111-5094.)

A.2.3 Order of precedence. Unless otherwise noted herein or in the contract, in the event of a conflict between the text of this document and the references cited herein, the text of this document takes precedence. Nothing in this document, however, supersedes applicable laws and regulations unless a specific exemption has been obtained.

A.3 INSTALLATION GUIDANCE

A.3.1 Class B and class C bonding. Class B bonding, and almost invariably Class C bonding, involves establishing and maintaining an electrically conductive, minimum resistance/impedance path between metallic surfaces by bolting them together. The only distinction of significance between Class B and C bonding is that Class C always involves a bond strap where, in almost every case, both ends/lugs of the bond strap are to be bolted.

A.3.2 Hull-generated EMI. Hull-generated EMI is caused by nonlinear or intermittent metal-to-metal contact junctions in the topside EME. It is advantageous to make the ship's topside areas, as nearly as possible, a single conducting surface free of all pinned, snap-linked, chain-linked, or other metallic discontinuities that might act as source(s) of IMI and BBN. Implementation of the following hull-generated EMI control measures can reduce IMI and BBN:

a. Metal-to-metal contact junctions in the topside EME should be avoided by use of nonmetallic substitute when available.

b. Metal-to-metal contact junctions, where movability or removability is not a requirement, should be Class A bonded.

c. Metal-to-metal contact junctions, where movability or removability is a requirement, should be Class B or Class C bonded to provide a low impedance current path around the junction.

d. The joining of dissimilar metals by bolting or riveting should be avoided in topside areas.

e. Except for anchor and anchor holding, metal chain should not be installed in topside areas.

f. Loose metallic items, such as pipes, cables, and portable rigging should not be stowed, stacked, or lashed down in topside areas.

Source: http://www.assistdocs.com -- Downloaded: 2010-01-07T18:10Z
Check the source to verify that this is the current version before use.

A.3.3 Bonding not recommended. Bonding is not a suitable alternative for hull-generated EMI control when bonding of the IMI/BBN source junction(s) will prevent or impede physical or mechanical operation or functional use of the item(s).

a. Emergency equipment. Emergency equipment should not be bonded when unbolting or removal of a bond strap will delay access or prevent use.

b. Moving hardware. Moving hardware items should not be bonded when doing so will prevent operation over the item's full range of travel or rotation.

c. Quick-release fittings. When installation of a bond strap will delay operation of quick-release fittings, such as those used with; lifeline assemblies, jettissonable fuel and ordnance storage racks and lockers, pelican hooks, etc., the item should not be bonded.

A.3.4 RF tuned receiver front-end stages. No additional protection is required for LF, MF, HF, VHF, or UHF receivers with an RF-tuned front-end stage because the greater selectivity of an RF-tuned front-end stage prevents equipment-generated IMI inherently. In addition, built-in automatic gain/volume control (AGC/AVC) circuitry often associated with these receivers may protect them against front-end overload from own-ships transmissions at tuned frequency.

A.3.5 COTS and NDI equipment. COTS/NDI electrical and electronic equipment not previously tested or evaluated for EMC compliance, should be tested in accordance with MIL-STD-461. For COTS/NDI previously tested for EMC compliance, EMI test reports should be requested from the procuring activity for use in risk mitigation during ship installation.

A.4 TESTING GUIDANCE

A.4.1 Pulse current injection (PCI) testing. PCI testing can be used to verify grounding effectiveness for all new point of entry grounding devices and installation methods not depicted in this standard.

A.4.2 Cable and case penetration/radiation EMI control. Effective cable/case penetration and radiation EMI control can be demonstrated by using applicable system visual inspections, EMI recognition and discovery test(s) found in the Shipboard Technical Assistance Network (STAN). Access to STAN is available from Commander, Naval Sea Systems Command, ATTN: SEA 05H3, 1333 Isaac Hull Avenue, SE, Stop 5011, Washington Navy Yard DC 20376-5011 or online at www.nde.navy.mil.

Source: http://www.assistdocs.com -- Downloaded: 2010-01-07T18:10Z
Check the source to verify that this is the current version before use.

ELECTRICAL SAFETY AND PROTECTION FOR COTS AND NDI EQUIPMENT

B.1. SCOPE

B.1.1 Scope. The purpose of this appendix is to ensure that all electrically-powered COTS/NDI equipment procured for shipboard use is: (1) in compliance with electrical shock hazard protection requirements when procured outside normal procurement channels, and (2) power line surge protected when applicable as mobile-transportable equipment is operated on ship's power. Compliance with the electrical shock hazard protection requirements of 4.4 and 5.7 will be certified upon acceptance when this standard is invoked in the procurement specifications for COTS/NDI equipment procured by government contract and issued from stock. However, portable and mobile transportable electrical COTS/NDI equipment not conforming to this standard's electrical safety requirements might be procured for shipboard use on the open market. In this case, the COTS/NDI may not have been tested to this standard's requirements; the procuring activity shall determine if they have been met. This Appendix is a mandatory part of the standard. The information contained herein is intended for compliance.

B.1.2 Implementation. This appendix requires the procuring activity to determine whether electrically-powered COTS/NDI equipment is suitable for shipboard use, and provides guidelines for modification of the equipment or ship's power, as necessary, to bring them into compliance with the established shipboard electrical shock hazard and power line surge protection requirements.

B.1.3 Application. These data in this standard specifically address portable and mobile-transportable COTS/NDI equipment and rack mounted or enclosure mounted COTS/NDI equipment, such as; tools, test equipment, desktop and laptop computers and peripherals, etc., onboard for official use. It may also be applicable to personal equipage when used aboard ship. Authorization for use of personal electrical/electronic equipment onboard is discussed in detail in Naval Ships Technical Manual (NSTM) Chapter 300.

B.2 APPLICABLE DOCUMENTS

B.2.1 General. The documents listed in this section are specified in sections 3 or 4 of this appendix. This section does not include documents cited in other sections of this standard or recommended for additional information or as examples. While every effort has been made to ensure the completeness of this list, document users are cautioned that they must meet all specified requirements of documents cited in sections 3, 4, or 5 of this appendix, whether or not they are listed.

B.2.2 Government documents.

B.2.2.1 Specifications, standards, and handbooks. The following specifications, standards, and handbooks form a part of this document to the extent specified therein. Unless otherwise specified, the issues of these documents are those cited in the solicitation or contract.

DEPARTMENT OF DEFENSE STANDARDS

MIL-STD-882 - Standard Practice for System Safety

(Copies of these documents are available online at http://assist.daps.dla.mil/quicksearch/ or from the Standardization Document Order Desk, 700 Robbins Avenue, Building 4D, Philadelphia, PA 19111-5094.)

B.2.2.2 Other Government documents, drawings, and publications. The following other Government documents, drawings, and publications form a part of this document to the extent specified herein. Unless otherwise specified, the issues of these documents are those cited in the solicitation or contract.

B.2.3 Order of precedence. Unless otherwise noted herein or in the contract, in the event of a conflict between the text of this document and the references cited herein, the text of this document takes precedence. Nothing in this document, however, supersedes applicable laws and regulations unless a specific exemption has been obtained.

Source: http://www.assistdocs.com -- Downloaded: 2010-01-07T18:10Z
Check the source to verify that this is the current version before use.

B.3 COMMERCIAL QUALIFICATION DOCUMENTATION

B.3.1 COTS and NDI equipment. COTS/NDI electrical and electronic equipment procured for shipboard use may not have been tested to determine whether it meets shipboard electrical safety requirements. As a result of ongoing DoD acquisition initiatives, COTS/NDI electrical equipment procurements should meet MIL-STD-882. Reports of any safety and EMC testing should be requested with the procurement of COTS or NDI equipment.

B.3.2 Testing results. The results of any testing performed by national or international standards development organization (SDO), such as; the Underwriters Laboratories (UL) in the United States and Canada, the Verbad Deutscher Elektrotechniker (VDE) of Germany, etc., shall be included with the technical data supplied for COTS/NDI electrical and electronic equipment procured for shipboard use. These reports can be used to determine risks associated with integration of the items for shipboard application.

B.4 ELECTRICAL SHOCK HAZARD PROTECTION REQUIREMENTS

Requirements for electrical shock hazard protection for portable and mobile-transportable electrical equipment and fixed rack mounted or enclosure mounted COTS/NDI equipment, are dependent on whether the equipment case is nonconductive or conductive.

B.4.1 Double insulated and non-conducting equipment. Double insulated and non-conducting equipment that is exempted in accordance with B.4.1.1 and B.4.1.2 below need not be grounded.

a. A 2-conductor power cord and 2-pronged plug is acceptable.

b. If initially provided with a 3-conductor power cord and 3-pronged plug for grounding, this type cord and plug shall be retained for the life of the device.

B.4.1.1 Double insulated equipment. Double insulated (UL listed) electrical equipment having the words “double insulated” or “double insulation” stamped on its enclosure/case shall require no grounding.

B.4.1.2 Non-conducting equipment. Electrical equipment with a non-conducting enclosure/case that is not stamped “double insulated” may be exempted from the requirement for a grounding conductor, provided that the equipment:

a. Case and handle is made of non-conducting material, and

b. Meets both of the following requirements:

(1) Passes an initial inspection for rugged, safe construction, and

(2) Has a minimum of 1 megohm DC resistance from any phase conductor to any exposed metal part (such as chuck housing, mounting screws, ear plug jacks, or antennas) or metal chassis.

B.4.2 Equipment with a conductive case or exposed conductive elements. Electrical equipment with a conductive case shall be grounded via a 3-conductor power cord and 3-pronged plug.

B.4.2.1 Installation requirements; 3-pronged plug. Electrical equipment with a conductive case or exposed conductive elements that are supplied with a 3-conductor power cord and 3-pronged plug shall not require additional grounding for electrical safety. Portable electrical equipment that has a 3-pronged plug shall not require additional grounding for EMI control.

B.4.2.2 Installation requirements; 2-pronged plug. Electrical equipment with a conductive case or exposed conductive elements that are supplied with a 2-conductor power cord and 2-pronged plug shall have the power cord and plug replaced with a 3-conductor cable of appropriate capacity and 3-pronged plug.

a. The third conductor shall be attached to the ground prong of the plug and the equipment chassis where the following conditions can be met:

(1) Where it is determined that a ground conductor can be conveniently connected to exposed metal parts on the equipment chassis.

(2) The modification does not compromise the equipment operation.

(3) The modification does not compromise the enclosure integrity.

Source: http://www.assistdocs.com -- Downloaded: 2010-01-07T18:10Z
Check the source to verify that this is the current version before use.

b. Before use, an insulation resistance test shall determine:

(1) 1 megohm (minimum) resistance between the conductive case and each active power conductor prong.

(2) 0.1 ohm (maximum) resistance between the conductive case and the power cord ground prong.

Source: http://www.assistdocs.com -- Downloaded: 2010-01-07T18:10Z
Check the source to verify that this is the current version before use.

NONMETALLIC HULL SHIPS
CABLE GROUND SYSTEM FABRICATION

C.1 SCOPE

C.1.1 Scope. The cable ground system is the common reference (earth potential) ground plane for nonmetallic hull ships. This appendix provides information on the fabrication of cable ground systems on nonmetallic hull ships. This appendix is a mandatory part of the standard. The information contained herein is intended for compliance.

C.1.2 Primary common ground reference; systems and shielded spaces. Separate branches of the multi-tree ground plane shall be directly connected from the ground plate (see figure C-1) to: (1) all shielded spaces; (2) the metallic mast; (3) the ship service and ship service emergency switchboards, and (4) the ship service and ship service emergency generator sets.

C.1.3 Common ground reference outside shielded spaces. Separate branches of the cable ground plane shall provide the common ground reference required for operation of electrical and electronic equipment located outside shielded spaces and for bonding of metallic items located in the topside EME when required for hull-generated EMI control.

C.1.4 Common ground reference inside shielded spaces. Separate branches of the cable ground plane may be required to directly connect equipment utilizing electrical power inside shielded spaces in the event the short circuit current capacity of the enclosure, and the primary branch, trunks, and ground plate connection points thereto would be exceeded.

C.1.5 Electrical safety ground for shock hazard protection. Separate branches of the cable ground plane may be required to provide a dedicated connection for electrical and electronic equipment to the ground plate for personnel protection.

C.2 APPLICABLE DOCUMENTS

C.2.1 General. The documents listed in this section are specified in sections 3, 4, 5, or 6 of this appendix. This section does not include documents cited in other sections of this standard or recommended for additional information or as examples. While every effort has been made to ensure the completeness of this list, document users are cautioned that they must meet all specified requirements of documents cited in sections 3, 4, 5, or 6 of this appendix, whether or not they are listed.

C.2.2 Government documents.

C.2.2.1 Specifications, standards, and handbooks. The following specifications, standards, and handbooks form a part of this document to the extent specified therein. Unless otherwise specified, the issues of these documents are those cited in the solicitation or contract.

DEPARTMENT OF DEFENSE SPECIFICATIONS

MIL-PRF-907	-	Antiseize Thread Compound, High Temperature
MIL-DTL-24643	-	Cables and Cords, Electric, Low Smoke, for Shipboard Use, General Specification for

(Copies of these documents are available online at http://assist.daps.dla.mil/quicksearch/ or from the Standardization Document Order Desk, 700 Robbins Avenue, Building 4D, Philadelphia, PA 19111-5094)

C.2.3 Non-Government publications. The following documents form a part of this document to the extent specified herein. Unless otherwise specified, the issues of these documents are those cited in the solicitation or contract.

Source: http://www.assistdocs.com -- Downloaded: 2010-01-07T18:10Z
Check the source to verify that this is the current version before use.

ASTM INTERNATIONAL

ASTM B152/B152M - Standard Specification for Copper Sheet, Strip, Plate, and Rolled Bar

(Copies of this document are available from ASTM International, 100 Barr Harbor Dr., PO Box C700, West Conshohocken, PA 19428-2959 or online at www.astm.org.)

NATIONAL FIRE PROTECTION ASSOCIATION (NFPA)

National Electrical Code Handbook

(Copies of this document are available from NFPA, 1 Batterymarch Park, Quincy, MA 02169-7471 or online at www.nfpa.org.)

C.2.4 Order of precedence. Unless otherwise noted herein or in the contract, in the event of a conflict between the text of this document and the references cited herein, the text of this document takes precedence. Nothing in this document, however, supersedes applicable laws and regulations unless a specific exemption has been obtained.

C.3 GROUND SYSTEM CABLES

The cables used in the ground cable installation shall be in accordance with MIL-DTL-24643, and shall have a minimum conductor size as specified herein.

C.3.1 Ground cable installation. Ground cables shall be of minimum lengths consistent with other requirements specified herein. Cables shall be installed in locations that provide minimum exposure to physical damage, and shall provide access for inspection, repair, or replacement. Cables installed on nonmetallic hull structures shall be supported by fasteners. Ground lugs installed on cables shall be copper and shall be connected by brazing. Lugs shall not be crimped to the extent that conductor diameter is affected.

C.3.2 Ground plate interconnecting cable. A number 650 million circular mils (MCM) cable shall be installed from each ground plate to the main ground connection point.

C.3.3 Main ground cable. Number 0000 AWG cables shall be used as main ground cables for grounding all electrical and electronic equipment and metallic items. These cables shall be connected to the main ground connection point and shall run throughout the ship as shown on figure C-1.

C.3.4 Branch ground cables. Branch ground cables shall be number 10 AWG and shall be used to connect equipment requiring grounding (see C.1.3) to main ground cables.

a. Branch ground cables shall be attached to the main ground cable by brazing or by connectors.

b. A separate ground conductor in a power supply cable may be used in lieu of a separate ground wire connecting electrical or electronic equipment to associated connection boxes and switch boxes.

(1) Ground conductor shall connect to the generator or distribution panel and to metal housings of each component within the electrical supply system.

(2) The generator or distribution panel shall then be connected to the ground plates.

c. Ground loops shall be avoided where multiple ground conductors or cable shields terminate to equipment housings.

d. The power cable method of grounding shall follow the safety grounding requirements of the NFPA National Electrical Code Handbook.

e. Class B bonding to metallic decks, bulkheads, or masts may be used in lieu of a branch ground wire.

Source: http://www.assistdocs.com -- Downloaded: 2010-01-07T18:10Z
Check the source to verify that this is the current version before use.

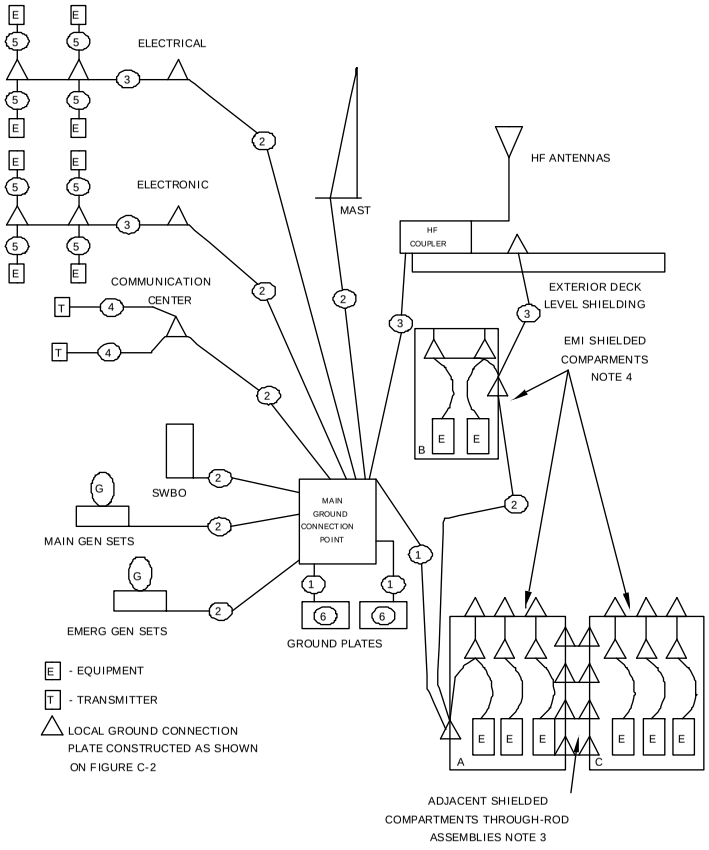

LIST OF MATERIAL			
ITEM NO.	PART	SPECIFICATION	NOTE
1	WIRE, COPPER NO. 650 MCM	MIL-DTL-24643	1
2	WIRE, COPPER NO. 0000 AWG	MIL-DTL-24643	1
3	WIRE, COPPER NO. 1/0 AWG	MIL-DTL-24643	1
4	WIRE, COPPER NO. 1 AWG	MIL-DTL-24643	1
5	WIRE, COPPER NO. 10 AWG	MIL-DTL-24643	1
6	PLATE, COPPER, 1/8"	ASTM B152/B152M	2

NOTES:

1. ALL CONDUCTOR SIZES ARE MINIMUM REQUIREMENTS ONLY.

2. GROUND PLATES SHALL BE LIGHT, COLD-ROLLED, OXYGEN-FREE COPPER, APPROXIMATELY 1/8" THICK AND SHALL PROVIDE APPROXIMATELY 16 SQ. FEET OF TOTAL SURFACE AREA DIVIDED INTO TWO EQUAL PARTS AT THE LOWEST POINT ON THE STRUCTURAL HULL, AS CLOSE AS POSSIBLE TO THE VERTICAL OF THE MAST.

3. SHIELDING OF ADJACENT SHIELDED COMPARTMENTS SHALL BE DIRECTLY CONNECTED VIA THE THROUGH-ROD ASSEMBLY (SEE FIGURE C-2).

4. EMI SHIELDING COMPARTMENTS A&B REPRESENT THE NORMAL EQUIPMENT GROUNDING CONFIGURATION (I.E., COMBINATION OF CABLES AND LOCAL GROUND CONNECTION PLATES FROM A TERMINAL EQUIPMENT TO THE MAIN GROUND CONNECTION POINT). EMI SHIELDED COMPARTMENT C REPRESENTS AN EQUIPMENT GROUNDING OPTION (I.E., A COMBINATION OF CABLES, LOCAL GROUND PLATES AND COMPARTMENT SHIELDING MATERIAL) FROM THE TERMINAL EQUIPMENT TO THE MAIN GROUND CONNECTION POINT. THIS OPTION CAN ONLY BE UTILIZED IF THE SHIELDING MATERIAL AND LOCAL GROUND PLATES CAN BE SHOWN TO CONTINUOUSLY HANDLE THE FULL SHORT-CIRCUIT CURRENT OF THE EQUIPMENT.

FIGURE C-1. Nonmetallic hull ship multi-tree ground system.

Source: http://www.assistdocs.com -- Downloaded: 2010-01-07T18:10Z
Check the source to verify that this is the current version before use.

LIST OF MATERIAL

ITEM NO.	PART	SPECIFICATION	NOTE
1	BOLT, COPPER		1, 2
2	NUT, JAM, COPPER		
3	NUT, HEX, COPPER		
4	WASHER, COPPER		
5	WASHER, RUBBER		
6	ROD, COPPER, THREADED		3, 4
7	WASHER, LOCK, COPPER		
8	TERMINAL, LUG, COPPER		
9	CAULK, POTTING MATERIAL		5
10	MATERIAL, SHIELD INTERFACE		6
11	PLATE, COPPER	ASTM B152/B152M	4

NOTES:

1. THE HEAD OF THE GROUND PLATE THROUGH-BOLT SHALL BE BRAZED TO THE GROUND PLATE.
2. THE GROUND PLATE THROUGH-BOLT SHALL AT LEAST BE EQUAL IN SIZE TO THE DIAMETER OF THE ASSOCIATED CABLE.
3. THE SHIELD THROUGH-ROD SHALL BE 3/8 INCH DIAMETER (MINIMUM)
4. THE STUD OF LOCAL GROUND CONNECTION PLATES SHALL BE 3/8 INCH DIAMETER (MINIMUM) AND BRAZED TO THE ASTM B 152 PLATE.
5. PROTECTION AGAINST SEEPAGE SHALL BE PROVIDED. USE MARINE CAULK OR POTTING MATERIAL COMPATIBLE WITH THE HULL MATERIAL AND NON-CORROSIVE TO THE THROUGH-BOLT.
6. THE SHIELD INTERFACE MATERIAL, E.G., WASHER OR CONDUCTIVE GASKET, SHALL BE SELECTED TO PROVIDE ELECTRICAL CONTINUITY FROM THE SHIELD TO THE THREADED ROD VIA A COPPER WASHER AND HEX NUT TO MINIMIZE DISSIMILAR METALS.

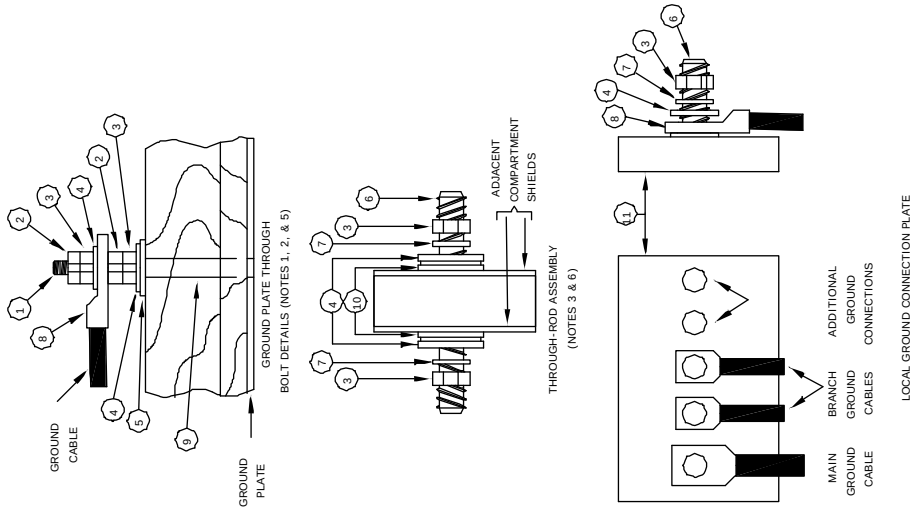

FIGURE C-2. Nonmetallic hull ship multi-tree ground connection methods.

Source: http://www.assistdocs.com -- Downloaded: 2010-01-07T18:10Z
Check the source to verify that this is the current version before use.

C.3.5 Electronic transmitter ground cable. A number 0000 AWG cable shall be connected to the main ground connection point and shall run as directly as possible to the radio transmitter space(s).

a. Each radio transmitter cabinet or enclosure shall be connected to this ground cable by a number 1 AWG cable.

b. Copper lugs or connectors, corresponding to cable size, shall be used on each end of this cable.

C.3.6 Antenna tuners and couplers, ground cable. Each HF antenna coupler shall normally be grounded by a dedicated number 1/0 AWG ground cable, run as directly as possible between each coupler and the main ground connection point.

a. Each HF coupler ground cable may be connected to the electronic transmitter ground cable, in lieu of the main ground connection point.

b. Other couplers and tuners located on metal masts or structures connected to the ground system shall be Class B bonded to the mast or structure.

c. Where couplers and tuners are mounted on nonmetallic masts or structures, a number 10 AWG ground system cable shall be provided.

d. To minimize effect of ground loops, RF transmission lines shall be routed with the tuner/coupler ground cables.

C.3.7 Lightning protection. A separate 0000 AWG cable connected to the main ground connection point shall be installed for lightning protection. This cable shall be routed in as straight a line as possible and shall be continuous and unspliced from the highest conductive surface to the main ground connection point.

C.3.8 Metal mast. Where a metal mast is used, it shall be connected to the ground plates using a size 0000 AWG cable. Equipment on the mast that requires grounding shall be grounded to the mast (see C.3.4.e).

C.4 EQUIPMENT/ITEMS GROUNDING REQUIREMENTS

C.4.1 Equipment/items that shall be grounded. The following equipment and items shall be connected to the ground system:

a. Equipment utilizing electrical power and any associated cabinets and interconnection boxes.

b. Fuel tanks, water tanks, and associated piping.

c. Metallic standing rigging.

d. Metallic cranes, hoisting gear, king posts, and masts.

e. Any metallic structure used for towing of, or in contact with, magnetic minesweeping cables, such as deck chocks, deck wearing plates, deck padeyes, and stern collar chocks.

f. Portable metallic liferails and ladderways.

g. Shielded rooms.

h. Engines, steering vanes, bow thruster controls, rudder stock, struts, main shaft (engine or reduction gear mount), main shaft fairing (if not grounded internally) sonar trunks, and metallic underwater appendages.

C.4.2 Items that should not require grounding. The following items should not require grounding:

a. Berths and desks.

b. Bitts and chocks (if not used with minesweeping operations).

c. Small metal objects, such as metal parts of air ports, hand tools (if not electrically operated), and other objects of comparable size.

d. Ventilators and ducting.

Source: http://www.assistdocs.com -- Downloaded: 2010-01-07T18:10Z
Check the source to verify that this is the current version before use.

C.5 GROUNDING TO SHIELDED AREA

Items and equipments specified in C.4.1 above located within 6 inches of a shielded area shall be grounded to the shielded area or to any ground cable from the shielded area connection point. Class B bonding to the shielded area may be used in lieu of a cable ground connection.

C.6 CONNECTIONS

Equipment and items required to be grounded shall have ground connections for terminating the ground cables in accordance with figure C-2. Each electrical or electronic equipment shall be individually connected to a branch ground (or main ground) cable so that disconnecting one equipment ground will not cause loss of a ground connection to other equipment. Connections within the ground cable system shall provide the same low resistance as the ground cables. Prior to assembly, threaded and crimp connectors shall be coated with an antiseize compound in accordance with MIL-PRF-907. Connections shall be protected from corrosion by an application of Permatex Form-A-Gasket #2 (CAGE 01232; NSN 8030-00-849-0071) or equivalent non-acidic sealing compound.

Source: http://www.assistdocs.com -- Downloaded: 2010-01-07T18:10Z
Check the source to verify that this is the current version before use.

Custodian:
Navy – SH

Reviewers:
Navy – AS, EC, OS

Preparing activity:
Navy – SH
(Project EMCS-2007-002)

NOTE: The activities listed above were interested in this document as of the date of this document. Since organizations and responsibilities can change, you should verify the currency of the information above using the ASSIST Online database at http://assist.daps.dla.mil.

Source: http://www.assistdocs.com -- Downloaded: 2010-01-07T18:10Z
Check the source to verify that this is the current version before use.