U.S.C.G. Merchant Marine Exam

First Assistant Engineer, Unlimited

Q511 General Subjects I

(Sample Examination)

Choose the best answer to the following Multiple Choice Questions.

1. A horizontal electro-mechanical anchor windlass is equipped with two warping heads, two wildcats, two manual brake hand wheels, two clutch control levers, and a multipoint lever-operated, pedestal-mounted controller. What statement is true as it pertains to the operation of the manual brake hand wheels?

- o (A) The manual brake hand wheels control band brakes that are associated with both the wildcats and the warping heads.
- o (B) The manual brake hand wheels control band brakes that are associated with the warping heads only.
- • (C) The manual brake hand wheels control band brakes that are associated with the wildcats only.
- o (D) The manual brake hand wheels control band brakes that are associated with either the wildcats or the warping heads, depending upon the windlass design.

If choice C is selected set score to 1.

2. A salinity indicator is used to determine the _____.

- o (A) level of alkalinity in condensate
- o (B) chemical makeup of feed water
- o (C) cause of salt contamination
- • (D) location of salt water contamination

If choice D is selected set score to 1.

3. Before doing any work on a hydraulic system equipped with accumulators, you should _____.

- o (A) completely charge the accumulators to prevent system energy loss
- • (B) bleed off all stored energy from the accumulators
- o (C) drain the accumulators and purge with oxygen
- o (D) pump the hydraulic fluid into the accumulators to prevent fluid loss

If choice B is selected set score to 1.

4. Antifriction bearings can be removed undamaged from a shaft by using an arbor press, or wheel puller with a _____.

- o (A) jack screw
- o (B) ring gage
- • (C) split washer or backup ring
- o (D) split die

If choice C is selected set score to 1.

5. What provision is made for sea chests for removal of air ingested into the sea chest of a machinery space sea water cooling system?

- o (A) The air may be continuously removed by an open valve located in the drain line originating from the bottom of the sea chest and terminating above the deep-draft load line.
- o (B) The air may be continuously removed by an open valve located in the vent line originating from the top of the sea chest and terminating in the bilges.
- o (C) The air may be continuously removed by an open valve located in the drain line originating from the bottom of the sea chest and terminating in the bilges.
- • (D) The air may be continuously removed by an open valve located in the vent line originating from the top of the sea chest and terminating above the deep-draft load line.

If choice D is selected set score to 1.

6. In the illustrated schematic, the device used to replace the six-way valve, as found on many older type steering gears, is the component labeled as _____. Illustration GS-0123

- • (A) "A"
- o (B) "B"
- o (C) "F"
- o (D) "H"

If choice A is selected set score to 1.

7. Which statement is true concerning the term "isochronous" as it applies to prime mover speed control governors?

- o (A) Isochronous governors are able to maintain constant prime mover load regardless of speed by employing temporary speed droop.
- • (B) Isochronous governors are able to maintain constant prime mover speed regardless of load by employing temporary speed droop.
- o (C) Isochronous governors are able to maintain constant prime mover load regardless of speed by employing permanent speed droop.
- o (D) Isochronous governors are able to maintain constant prime mover speed regardless of load by employing permanent speed droop.

If choice B is selected set score to 1.

8. Referring to the illustration, note that the solenoid in line "C" is closed. The check valve in line "E" is open. The separator service pump is running. The check valve in line "G" is closed. Valve "B" is open. Valve "D" is closed. What is the operational status of the oily-water separator unit? Illustration GS-0175

- o (A) The oily-water separator is in the bilge water separation processing mode with water discharging overboard with an oil content greater than 15 ppm.
- o (B) The oily-water separator is in the bilge water separation processing mode with water discharging back to the bilge water holding tank with an oil content greater than 15 ppm.
- • (C) The oily-water separator is in the bilge water separation processing mode with water discharging overboard with an oil content less than 15 ppm.
- o (D) The oily-water separator is in the bilge water separation processing mode with water discharging back to the bilge water holding tank with an oil content less than 15 ppm.

If choice C is selected set score to 1.

9. If the bearings of a piece of machinery are fed by a gravity feed lubricating oil system, what statement is true concerning the vertical arrangement of the lube oil tanks?

- o (A) The lube oil gravity tank and the lube oil reservoir/sump are both above the points of lubrication.
- o (B) The lube oil gravity tank and the lube oil reservoir/sump are both below the points of lubrication.
- o (C) The lube oil gravity tank is below the points of lubrication and the lube oil reservoir/sump is above the points of lubrication.
- • (D) The lube oil gravity tank is above the points of lubrication and the lube oil reservoir/sump is below the points of lubrication.

If choice D is selected set score to 1.

10. If a main propulsion shafting arrangement is such that a strut and strut bearing is required, what is the name of the section of shafting that passes through the hull penetration to the closest watertight bulkhead?

- o (A) Tail or propeller shaft
- o (B) Line shaft
- o (C) Thrust shaft
- • (D) Stern tube shaft

If choice D is selected set score to 1.

11. Which of the following desalination plants will always require a sterilizer when providing water to a potable water system?

- • (A) Reverse osmosis type unit
- o (B) Titanium plate type unit
- o (C) Submerged tube type unit
- o (D) Multi-stage flash type unit

If choice A is selected set score to 1.

12. Concerning steerable internal duct thrusters, what statement is true?

- o (A) The thrust direction of the steerable internal duct thruster is determined by the orientation of the pump inlet guide vanes.
- o (B) The thrust direction of the steerable internal duct thruster is determined by reversing the pitch angle of the pump impeller.
- • (C) The thrust direction of the steerable internal duct thruster is determined by the orientation of the water discharge vectoring ring.
- o (D) The thrust direction of the steerable internal duct thruster is determined by the direction of rotation of the pump.

If choice C is selected set score to 1.

13. Concerning a conventional mooring winch, what statement is true?

- • (A) A high capacity brake is required to hold a load approaching the breaking strength of the mooring line, but it is required to slip at a lower tension to avoid mooring line breakage.
- o (B) A high capacity brake is required to hold a load equal to the breaking strength of the mooring line. For reasons of safety, no slippage of the brake is permitted.
- o (C) A high capacity brake is required to hold a load exceeding the breaking strength of the mooring line. For reasons of safety, no slippage of the brake is permitted.
- o (D) A low capacity brake is required to hold a load far below the breaking strength of the mooring line, but it is required to slip at a lower tension to avoid mooring line breakage.

If choice A is selected set score to 1.

14. When the helm angle position is changed, the series of corresponding events of the steering gear will include _____.

I. rate of steering gear ram movement will be proportional to amount of helm angle input

II. degree of tilting plate (box) angle will be proportional to the amount of helm angle input

- o (A) I only
- o (B) II only
- • (C) Both I and II
- o (D) Neither I nor II

If choice C is selected set score to 1.

15. The process of grinding, shredding, or reducing the size of sewage particles is known as _____.

- o (A) detention
- • (B) maceration
- o (C) bulking
- o (D) chlorinating

If choice B is selected set score to 1.

16. You are unable to pump out the aft starboard engine room bilge well that is fouled, with one foot of water over the top of the bilge well, what action should be carried out?

- o (A) Send the wiper into the well with only a scoop and pail.
- o (B) Simultaneously operate all available bilge pumps.
- • (C) Remove the bilge manifold valve and attempt to back flush the line.
- o (D) It is only necessary to transfer half the contents of a drum of degreaser into the bilge well.

If choice C is selected set score to 1.

17. A hydraulic system flow control circuit is shown in the illustration and is known as a _____. Illustration GS-0106

- o (A) bleed-in circuit
- o (B) bleed-off circuit
- o (C) metered-in circuit
- • (D) metered-out circuit

If choice D is selected set score to 1.

18. What is the BEST indication that the membrane module is damaged and is no longer semi-permeable and allowing the solute to pass through?

- o (A) Lower than normal fresh water production.
- o (B) Higher than normal brine overboard back pressure.
- • (C) High fresh water outlet salinity.
- o (D) Low fresh water outlet salinity.

If choice C is selected set score to 1.

19. Accidental flooding of the engine room bilges through the bilge system is prevented by _____.

- o (A) using a positive displacement reciprocating bilge pump
- o (B) installing a swing check before each bilge valve
- o (C) installing eductors in all bilge rose boxes
- • (D) stop-check valves installed in the bilge suction manifolds

If choice D is selected set score to 1.

20. Concerning main propulsion reduction gears, what statement is true?

- (A) The reduction gear allows the prime mover to rotate efficiently at relatively high speed and low torque and allows the propeller to rotate efficiently at relatively low speed and high torque.
- (B) The reduction gear allows the prime mover to rotate efficiently at relatively high speed and high torque and allows the propeller to rotate efficiently at relatively low speed and low torque.
- (C) The reduction gear allows the prime mover to rotate efficiently at relatively low speed and low torque and allows the propeller to rotate efficiently at relatively high speed and high torque.
- (D) The reduction gear allows the prime mover to rotate efficiently at relatively low speed and high torque and allows the propeller to rotate efficiently at relatively high speed and low torque.

If choice A is selected set score to 1.

21. What design feature is used to minimize potable water wastage associated with hot water distribution piping for a potable water system?

- (A) Use of storage type hot water heaters only.
- (B) Use of hot water recirculation loops.
- (C) Use of hot water heaters with multiple heat sources.
- (D) Use of instantaneous type hot water heaters only.

If choice B is selected set score to 1.

22. On a bearing using an oiling ring as means of static oil feed, unless adverse conditions would indicate otherwise, how often should the oil be completely changed at a minimum?

- (A) Weekly
- (B) Monthly
- (C) Quarterly
- (D) Annually

If choice D is selected set score to 1.

23. The function of item "7" shown in the illustration is to _____. Illustration GS-0153

- (A) support the tank access panel
- (B) allow the oil accumulated to exit the device, while remaining separated from the liquid
- (C) prevent separated oil from mixing with the incoming bilge water
- (D) direct the flow of the oily-water mixture against the coalescer bed

If choice C is selected set score to 1.

24. The crosshatch design on the end of piece "3" in the illustration shown indicates that _____. Illustration GS-0020

- o (A) the piece is screwed into piece No.2
- o (B) the piece is made of mild carbon steel
- • (C) piece No.3 is knurled in that area
- o (D) piece No.3 is made of stainless steel

If choice C is selected set score to 1.

25. If a bilge pump is able to develop vacuum, but is unable to sufficiently pump out the bilges, you would check for all of the following EXCEPT _____.

- • (A) the circuit breaker
- o (B) for leaks in the suction piping
- o (C) the suction strainer
- o (D) relief valve is not properly seated

If choice A is selected set score to 1.

26. The greatest difference between absorbent and adsorbent filters is that absorbent filters _____.

- o (A) will remove additives from the lube oil
- • (B) soak up liquid contaminants directly into the filter media
- o (C) do not create pressure drops in the lube oil system
- o (D) attract or have liquid contaminants stick to the surface of the filter media

If choice B is selected set score to 1.

27. For an electro-hydraulic cargo-handling pedestal-type deck crane, what event would result in an immediate stop to all crane motions, including slewing, hoisting, and luffing?

- o (A) All motions are stopped by the action of the slewing platform limit switches.
- • (B) All motions are stopped by the loss of electric power to the crane.
- o (C) All motions are stopped by the action of the safe working load cutout switch or the slack wire limit switch.
- o (D) All motions are stopped by the action of the boom maximum outreach and minimum outreach limit switches.

If choice B is selected set score to 1.

28. A hydraulic cylinder is fitted with a cushioning device. The piston abruptly slows towards the end of its stroke, and then continues to creep to the completion of its stroke. Which of the following represents the probable cause?

- o (A) The cushion adjustment needle valve is open too far.
- o (B) The rod wiper is jammed in the cushion spear.
- • (C) The cushion adjustment needle valve is not open sufficiently.
- o (D) The exhaust oil is flowing freely through the cushion nose.

If choice C is selected set score to 1.

29. The crosshatch design on the end of piece "3" in the illustration shown indicates that _____. Illustration GS-0020

- o (A) the piece is screwed into piece No.2
- o (B) the piece is made of mild carbon steel
- • (C) piece No.3 is knurled in that area
- o (D) piece No.3 is made of stainless steel

If choice C is selected set score to 1.

30. In a closed-loop process control system, what is meant by error?

- o (A) The progressive reduction or suppression of oscillation in a component.
- o (B) The criterion of good control that permits no overshoot when the set point is changed.
- • (C) The signal in a controller that is obtained by subtracting the measured value of the controlled value from the set point.
- o (D) The ratio of the amplitude of the output signal of a component divided by the amplitude of the input signal.

If choice C is selected set score to 1.

31. Which of the following propulsor types represents the proper terminology for electric propulsion where the drive motors are outside the ship's hull?

- o (A) Jet drive
- • (B) Azipod propulsor
- o (C) Cycloidal propeller
- o (D) Azimuthing propulsor

If choice B is selected set score to 1.

32. Failure to establish sufficient vacuum when starting up the unit shown in the illustration may be the result of _____. Illustration MO-0110

- o (A) improper operation of the distillate pump
- • (B) neglecting to close the shell vent
- o (C) neglecting to latch the dump valve
- o (D) improper operation of the brine pump

If choice B is selected set score to 1.

33. Marine sanitation devices installed on vessels must be certified by the _____.

- • (A) U.S. Coast Guard
- o (B) American Bureau of Shipping
- o (C) Society of Naval Architects and Marine Engineers
- o (D) Environmental Protection Agency

If choice A is selected set score to 1.

34. Referring to the illustration, what would be the result if the upper oil/water interface detection probe became faulty? Illustration GS-0175

- o (A) The unit would not be able to transition from ending the separation processing mode to initiating the oil discharge mode.
- o (B) The unit would not be able to transition from the overboard discharge mode to the recirculation mode while in the separation processing mode.
- • (C) The unit would not be able to transition from ending the oil discharge mode to initiating the separation processing mode.
- o (D) The unit would not be able to come out of the oily-water separator idle mode and begin processing bilge water.

If choice C is selected set score to 1.

35. If valve "H" shown in the illustration is opened wide while the distiller is in operation, _____. Illustration MO-0111

- o (A) the absolute pressure of the unit will increase with an associated decrease in shell temperature
- o (B) the absolute pressure of the unit will increase due to the increased affect of the air ejector
- o (C) the absolute pressure of the unit will not be affected, but the rate of condensation will be decreased
- • (D) the absolute pressure of the unit will increase with an associated increase in shell temperature

If choice D is selected set score to 1.

36. One of the consequences in continuing to operate a centrifugal bilge pump with the discharge valve closed, is that the _____.

- • (A) pump will overheat
- o (B) relief valve will open
- o (C) motor overload will open
- o (D) motor will overheat

If choice A is selected set score to 1.

37. What type of propeller consists of a flat disc set flush with the under surface of the vessel's hull with a number of vertical, rudder-like blades projecting from it?

- o (A) Helicoidal propeller
- • (B) Cycloidal propeller
- o (C) Contra-rotating propeller
- o (D) Tandem propeller

If choice B is selected set score to 1.

38. New piping and tubing to be installed in a hydraulic system can be safely degreased by using _____.

- o (A) alcohol
- o (B) a water-based detergent
- o (C) carbon tetrachloride
- • (D) a special petroleum solvent

If choice D is selected set score to 1.

39. When the oily-water separator, shown in the illustration, is in operation and processing clear bilge water, what should be the internal water level? Illustration GS-0153

- o (A) The water level should be located in the lower section of the tank as controlled by flow control valve "14".
- o (B) The water level in the tank should be slightly above the upper coalescer bed "9".
- • (C) The water level should be located in the upper section of the tank.
- o (D) No water level is maintained in the tank.

If choice C is selected set score to 1.

40. A bearing using an oiling ring as a means of static oil feed must occasionally be serviced by removing the wear particles, grit, and moisture. How is this accomplished?

- o (A) Draining the bottom of the strainer housing.
- o (B) Rotating the handle of the lube oil strainer.
- o (C) Changing the filter element.
- • (D) Draining the bottom of the bearing lube oil sump.

If choice D is selected set score to 1.

41. Which of the conditions listed would indicate a large condenser tube leak within the distiller shown in the illustration? Illustration MO-0111

- o (A) A slow continuous rise in the lube oil cooler outlet temperature indicated at device "4".
- • (B) The activation of the salinity monitoring equipment's annunciator circuit.
- o (C) A decrease in the level of the main engine expansion tank as indicated by a low level alarm.
- o (D) An increase in distiller output resulting from the combination of jacket water and the distillate produced.

If choice B is selected set score to 1.

42. In order for the hydraulic pump installed in a constant flow system to maintain adequate flow, the pump suction should _____.

- o (A) be taken directly off the reservoir bottom without regard to filters or strainers
- o (B) be provided with three to five 1/2 inch holes in the vertical, suction line to prevent pump starvation should the strainer become fouled
- • (C) be arranged to develop a maximum vacuum of approximately 10" of mercury
- o (D) be arranged to develop the theoretically maximum attainable vacuum

If choice C is selected set score to 1.

43. What type of bearing is most generally used as an independent main thrust block on merchant ships?

- o (A) Split-half journal type bearing.
- o (B) Plain thrust bearing.
- o (C) Single piece bushing.
- • (D) Pivoted-shoe thrust bearing.

If choice D is selected set score to 1.

44. As it pertains to the luffing motion limits associated with an electro-hydraulic cargo-handling pedestal-type deck crane, what statement is true?

- o (A) When the hoist block is raised to a maximum permissible height with respect to the boom, the luffing pump shall be stroked to zero and the luffing winch brake set.
- o (B) When the hoist block is raised to a maximum permissible height with respect to the boom, the luffing pump shall be placed on stroke and the luffing winch brake released.
- o (C) When the boom is raised to a maximum permissible height or lowered to a minimum permissible height, the luffing pump shall be placed on stroke and the luffing winch brake released.
- • (D) When the boom is raised to a maximum permissible height or lowered to a minimum permissible height, the luffing pump shall be stroked to zero and the luffing winch brake set.

If choice D is selected set score to 1.

45. Under what conditions would the pre-treatment capabilities of a reverse osmosis fresh water generator MOST likely be overloaded, and as a result, these conditions should generally be avoided?

- o (A) Entering low temperature seas.
- • (B) Entering harbors.
- o (C) Entering high temperature seas.
- o (D) Entering open seas.

If choice B is selected set score to 1.

46. When new piping sections have been fabricated for installation in a hydraulic system, prior to installation the piping should be _____.

- o (A) cleaned using a water-based detergent
- • (B) descaled by using a pickling solution
- o (C) hydrostatically tested to 100% of maximum working pressure
- o (D) all of the above

If choice B is selected set score to 1.

47. For a parallel axis single reduction gear, what statement is true?

- • (A) The drive pinion is the smaller of the two gears and rotates at a relatively high speed. The driven gear is the larger of the two gears and rotates at a relatively low speed.
- o (B) The drive pinion is the smaller of the two gears and rotates at a relatively low speed. The driven gear is the larger of the two gears and rotates at a relatively high speed.
- o (C) The drive pinion is the larger of the two gears and rotates at a relatively high speed. The driven gear is the smaller of the two gears and rotates at a relatively low speed.
- o (D) The drive pinion is the larger of the two gears and rotates at a relatively low speed. The driven gear is the smaller of the two gears and rotates at a relatively high speed.

If choice A is selected set score to 1.

48. As it pertains to raising and lowering an anchor with a horizontal electro-hydraulic or electro-mechanical anchor windlass, what statement is true?

- o (A) The anchor can be either raised or lowered under power with the windlass by disengaging the wildcat clutch. The anchor can be lowered by gravity by controlling the anchor chain payout with the wildcat manual brake with the wildcat clutch engaged.
- o (B) The anchor can only be raised (and not lowered) under power with the windlass by engaging the wildcat clutch. The anchor can be lowered by gravity by controlling the anchor chain payout with the wildcat manual brake with the wildcat clutch disengaged.
- o (C) The anchor can only be raised (and not lowered) under power with the windlass by disengaging the wildcat clutch. The anchor can be lowered by gravity by controlling the anchor chain payout with the wildcat manual brake with the wildcat clutch engaged.
- • (D) The anchor can be either raised or lowered under power with the windlass by engaging the wildcat clutch. The anchor can be lowered by gravity by controlling the anchor chain payout with the wildcat manual brake with the wildcat clutch disengaged.

If choice D is selected set score to 1.

49. After installing a new hydraulic pump in a system, what special attention should be given to the hydraulic system?

- o (A) All system pressure should be readjusted.
- o (B) The relief valves in the system should be readjusted.
- • (C) The filters and strainers should be checked frequently.
- o (D) The system should be drained and renewed with a fluid of different operating characteristics.

If choice C is selected set score to 1.

50. What is the length of the stud used to secure the packing gland shown in the illustration? Illustration GS-0012

- o (A) 1 inch
- o (B) 1 1/4 inches
- o (C) 1 1/2 inches
- • (D) 2 1/2 inches

If choice D is selected set score to 1.

51. The thickest deposit of scale in a flash evaporator is most likely to occur in the tubes of the _____.

- • (A) salt water feed heater
- o (B) distillate cooler
- o (C) first-stage condenser
- o (D) flash chamber

If choice A is selected set score to 1.

52. While the illustrated system is operated using the steam supply through "OR4" the strainer "MD9" becomes fouled, this will result in _____. Illustration GS-0053

- • (A) a reduction in distillate production
- o (B) the temperature regulated by "CV3" difficult to maintain
- o (C) nothing unusual for the type of operation indicated as this line was unnecessary in the installation
- o (D) PU4 becoming vapor bound

If choice A is selected set score to 1.

53. Which of the following statements best describes the filtering ability of a fine mesh metal lube oil strainer?

- o (A) A 200 wire mesh screen and a 100 wire mesh screen both prevent passage of the same size particles, but each allows a different number of particles to pass through.
- o (B) A 100 wire mesh screen will prevent passage of smaller particles than a 200 wire mesh screen.
- o (C) A 200 mesh screen has larger wires than a 100 mesh screen.
- • (D) A 200 wire mesh screen will prevent passage of smaller particles than a 100 wire mesh screen.

If choice D is selected set score to 1.

54. A high reading is indicated at the salinity cells labeled "Y", "Q", and "6" shown in the illustration. This would be the probable result of _____. Illustration GS-0053

- • (A) carryover from "III"
- o (B) faulty cells at each location
- o (C) a leak in item"I"
- o (D) erosion of item "2"

If choice A is selected set score to 1.

55. In a flash-type evaporator, an electrical salinity cell would be installed in the _____.

- o (A) distillate inlet to the distillate cooler
- o (B) distillate outlet from the distillate cooler
- o (C) condensate drains from the distiller feed water heater
- • (D) all of the above

If choice D is selected set score to 1.

56. Assuming valve "A" is correctly aligned in the no-flow position as shown with the system in operation, which of the following statements is true? Illustration GS-0049

- (A) Valve "D" would normally open before valve "B".
- (B) Valve "C" would be closed.
- (C) The fixed delivery pump would be stopped automatically by a pressure switch.
- (D) Valve "B" would be open before valve "D".

If choice A is selected set score to 1.

57. The device shown in the illustration is a/an _____. Illustration GS-0116

- (A) diesel engine motor mount
- (B) mechanical shaft seal
- (C) oil scraper ring stuffing box for a crosshead engine
- (D) vane type steering gear

If choice D is selected set score to 1.

58. Rudder position is shown on the bridge by the _____.

- (A) rudder angle indicator
- (B) follow-up gear
- (C) telemotor position
- (D) Rapson slide indicator

If choice A is selected set score to 1.

59. Referring to the illustration, suppose the oily-water separator vessel compound gauge is showing an unusually deep vacuum for operating in the separation processing mode with the separator service pump running. The oil content is 8.3 ppm. What is most likely the cause? Illustration GS-0175

- (A) The oily-water separator bilge suction strainer is clogged.
- (B) The oily-water separator vessel relief valve is leaking.
- (C) The oily-water separator service pump is worn.
- (D) The bilge water holding tank level is unusually high resulting in a high level alarm.

If choice A is selected set score to 1.

60. As it pertains to the automatic hydraulic brake of a horizontal electro-hydraulic anchor windlass, what statement is true?

- o (A) The brake is spring set and hydraulically released, and the brake automatically releases when the pump is brought to zero stroke or there is a loss of servo power hydraulic pressure.
- o (B) The brake is hydraulically set and spring released, and the brake automatically releases when the pump is brought to zero stroke or there is a loss of servo power hydraulic pressure.
- o (C) The brake is hydraulically set and spring released, and the brake automatically sets when the pump is brought to zero stroke or there is a loss of servo power hydraulic pressure.
- • (D) The brake is spring set and hydraulically released, and the brake automatically sets when the pump is brought to zero stroke or there is a loss of servo power hydraulic pressure.

If choice D is selected set score to 1.

61. A hydraulic system gear pump being fed from a reservoir frequently indicates signs of excessive pitting after two months of service. Which of the following would most likely contribute to this condition?

- o (A) A partial restriction in the return line has developed.
- o (B) Abnormal pressurization is occurring in the reservoir.
- o (C) Operating oil temperature is determined to be below normal.
- • (D) A vacuum condition has developed in the reservoir.

If choice D is selected set score to 1.

62. What type of propulsor is typically used in electric motor driven, transverse, tunnel bow thrusters to limit the starting current of the single speed drive motor?

- o (A) Cycloidal propeller
- o (B) Detachable-blade (built-up) propeller
- • (C) Controllable-pitch propeller
- o (D) Fixed-pitch propeller

If choice C is selected set score to 1.

63. Referring to the illustrated motor ship fresh water cooling system drawing, what statement is true concerning the turbocharger bypass line associated with the jacket water cooling system? Illustration MP-CW-06

- o (A) The turbocharger cooling water bypass line with the control orifice proportions the cooling water flow so that the turbocharger receives a greater flow rate of cooling water as compared to the main engine cooling water jackets.
- o (B) The turbocharger cooling water bypass line with the control orifice proportions the cooling water flow so that the turbocharger receives the same flow rate of cooling water as does the main engine cooling water jackets.
- • (C) The turbocharger cooling water bypass line with the control orifice proportions the cooling water flow so that the turbocharger receives a lesser flow rate of cooling water as compared to the main engine cooling water jackets.
- o (D) The turbocharger cooling water bypass line with the control orifice works in conjunction with the deaerator to remove entrained air from the jacket water outlet.

If choice C is selected set score to 1.

64. In a closed-loop process control system, what term is used to describe the action of measuring the difference between the actual result and the desired result and using that difference to drive the actual result toward the desired result?

- o (A) Instability
- o (B) Gain
- • (C) Feedback
- o (D) Dead band

If choice C is selected set score to 1.

65. In the pump shown in the illustration, what is the distance from the bottom of the inlet to the bottom end of the motor shaft? Illustration GS-0011

- o (A) 45 1/4 inches
- o (B) 45 5/16 inches
- o (C) 53 5/8 inches
- • (D) 57 5/8 inches

If choice D is selected set score to 1.

66. If the flow rate to a linear actuator is reduced by half of the original amount, the _____.

- o (A) the actuator will move erratically
- o (B) speed of the actuator will be increased
- o (C) pump discharge pressure will be reduced by a proportional amount
- • (D) speed of the actuator will be reduced

If choice D is selected set score to 1.

67. In a closed-loop process control system, what is meant by the proportional mode of control?

- o (A) It is a control mode that produces a control action that is proportional to the gain.
- o (B) It is a control mode that produces a control action that is proportional to the rate at which the error is changing.
- o (C) It is a control mode that produces a control action that is proportional to the accumulation of error over time.
- • (D) It is a control mode that produces a control action that is proportional to the error.

If choice D is selected set score to 1.

68. Referring to the illustrated steam plant sea water cooling system drawing, which pump can be used to pump out the main machinery space bilge in a flooding emergency? Illustration SP-SW-01

- o (A) The single-speed main sea water circulating pump can be used for this purpose.
- o (B) The auxiliary sea water circulating pump can be used for this purpose.
- • (C) The two-speed main sea water circulating pump can be used for this purpose.
- o (D) Any of the sea water service pumps can be used for this purpose.

If choice C is selected set score to 1.

69. Which term represents the ability of a speed control governor to maintain prime mover speed without hunting?

- • (A) Stability
- o (B) Sensitivity
- o (C) Promptness
- o (D) Dead band

If choice A is selected set score to 1.

70. Referring to the illustration, suppose while in the oil separation processing mode, the oil content detector display screen shows 17.9 ppm and the oily-water separator is discharging back to the bilge water holding tank for recirculation. What is most likely the cause? Illustration GS-0175

- • (A) The bilge water holding tank contents is excessively contaminated with oil.
- o (B) The oily-water separator bilge suction strainer is excessively clogged.
- o (C) The oily-water separator service pump is excessively worn.
- o (D) The bilge water holding tank level is excessively high resulting in a high level alarm.

If choice A is selected set score to 1.

GS-0011

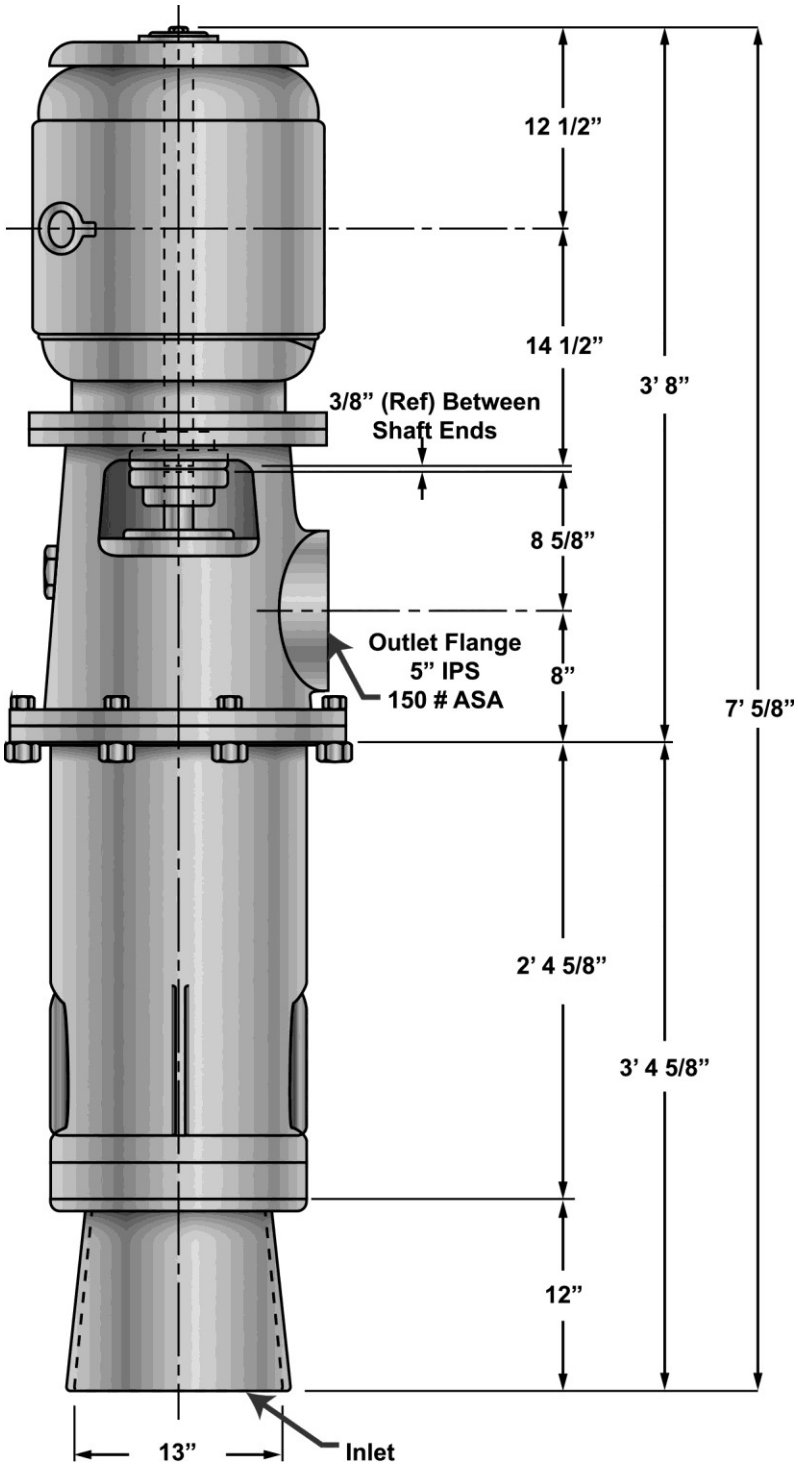

MOTOR CHARACTERISTICS

Motor (A. C.)	Electro Dynamic
Rating H. P.	25
Speed R. P. M. (SYN.)	1200
Frame	365 VY
Type	TN
Volts	440
Cycles	60
Phase	3

PUMP CHARACTERISTICS

Capacity G. P. M.	400
Speed R. P. M.	1150
Suction Lift “HG	10
B, H, P. @ 1200 SSU-75° F	24.9
Oil viscosity Range, SSU	74-7000
Viscosity Normal SSU @ 140° F	155
Discharge Normal PSIG	55
Fluid Handled, Lube Oil	2190 TEP.
Navy Specification	MIL-L-17331
Oil Temperature Range ° F	40-180

Illustration scale: 1” = 1’

Adapted for testing purposes only
Further reproduction prohibited without permission

GS-0012

ITEM	QTY	DESCRIPTION	MATERIAL	REMARKS
1	1	Impeller	NI-CU Alloy	3H1A
2	1	Volute	Gunmetal	3H4C
3	1	Suction Cover	Gunmetal	3H193
4	1	Volute Wear Ring	Valve Bronze	A-3H180A
5	1	Volute Gasket	Asbestos	P/N 3H37
6	1	Impeller Wear Ring	NI-CU Alloy	3H180
7	1	Motor Bracket	Cast Steel	2L3C
8	1	Shaft Sleeve	NI-CU Alloy	P/N A-014-20A-0-01
9	1	Throat Bushing	NI-CU Alloy	P/N 4L26-4
10	1	Lantern Ring	NI-CU Alloy	4L169
11	2	Gland Half	Bronze	B-017-5AH-A
12	1	Slinger	Neoprene	1 47/64 X 3 ¾ X 1/8TH
13	1	Impeller Washer	NI-CU Alloy	17/32 X 9/16 X 3/16TH
14	1	Impeller Key	NI-CU Alloy	¼ SQ X 2 5/16 TH
15	1	SKT HD Capscrew	SST	½-13 NC X 1¼ LG NYLOCK
16	5	Packing Rings	Plastic Mtlc	1¾ X 2 5/8 X 7/16 SQ
17	1	Name Plate	BPass	P/N A-226-00N-0-03
18	8	Hex Head Capscrews	NI-CU Alloy	½-13 NC X 1 LG
19	4	Hex Head Capscrews	NI-CU Alloy	3/8-16 x 1 LG
20	4	Hex Head Capscrews	NI-CU Alloy	½-13 NC X 1 1/4 LG
21	2	Stud	SST	3/8-16 NC X 2½ LG
22	2	Hex Nut	Bronze	3/16-16 2
23	3	Setscrew	NI-CU Alloy	10-24 NC X ¼ LG CUP
24	3	Setscrew	NI-CU Alloy	10-24 NC X ¼ LG CUP
25	4	Drive Screw	Brass	6-24 X ¼ LG
26	3	Pipe Plug	Bronze	¼ NPT
27	1	Vent Valve	Bronze	¼ NPT
28	1	O Ring	Bunh "N"	1 5/16 ID 1/16 WIDE
29	1	Pipe	70-30 CU-NI	4 11/16 LG ¼ NPT
30	1	Pipe	70-30 CU-NI	3 3/16 LG ¼ NPT
31	1	Flange	Valve Bronze	¼ INCH 150#

Note: Inside dia. of Wearing Ring, PC No. (4) is .020 undersize outside dia. of Wearing Ring, PC No. (6) is .020 oversize when finished as repair parts and are designated as part No. 5 A3H180A-1 U/S and 3H180-1 O/S

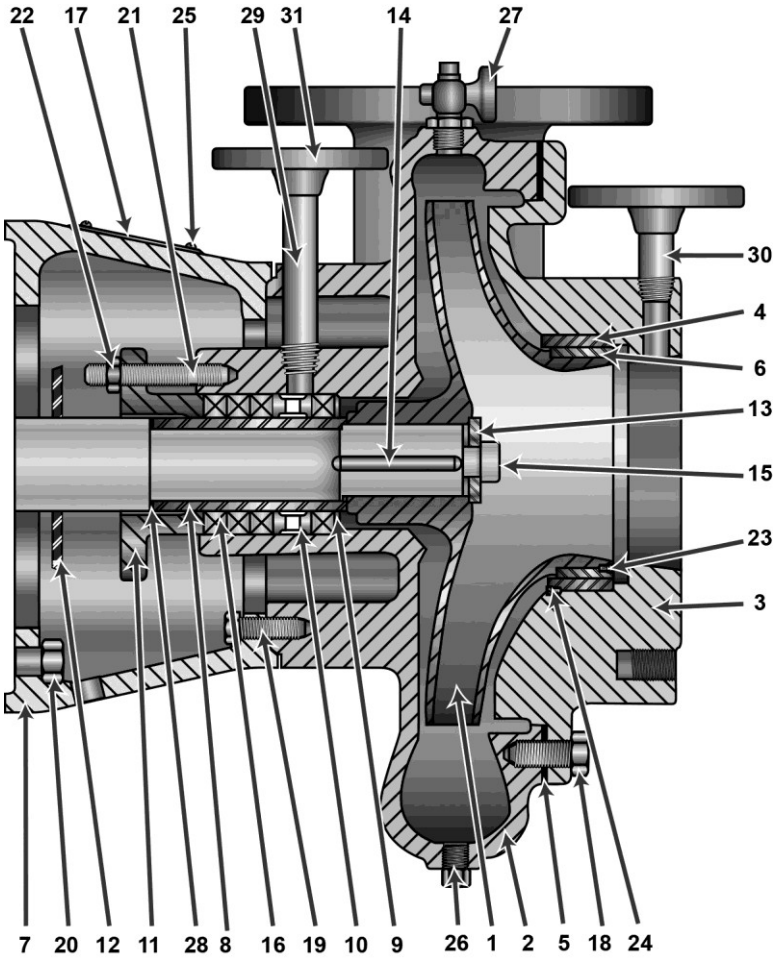

Adapted for testing purposes only
Further reproduction prohibited without permission

GS-0020

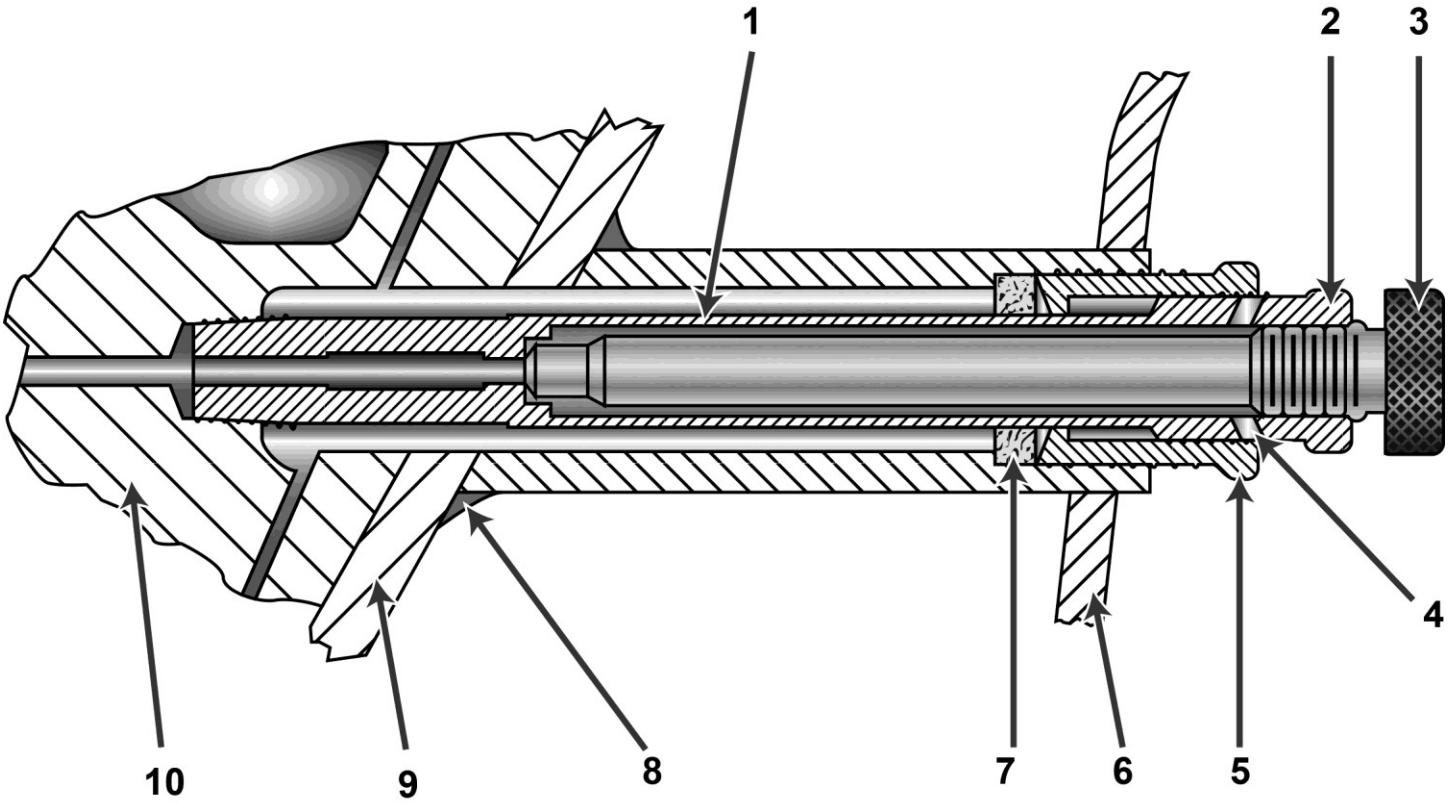

Adapted for testing purposes only from 645E7B Turbocharged
Marine Engine/Systems,, 1st Edition
Copyright © 1980 by Electro-Motive Division of General Motors
Further reproduction prohibited without permission

GS-0049

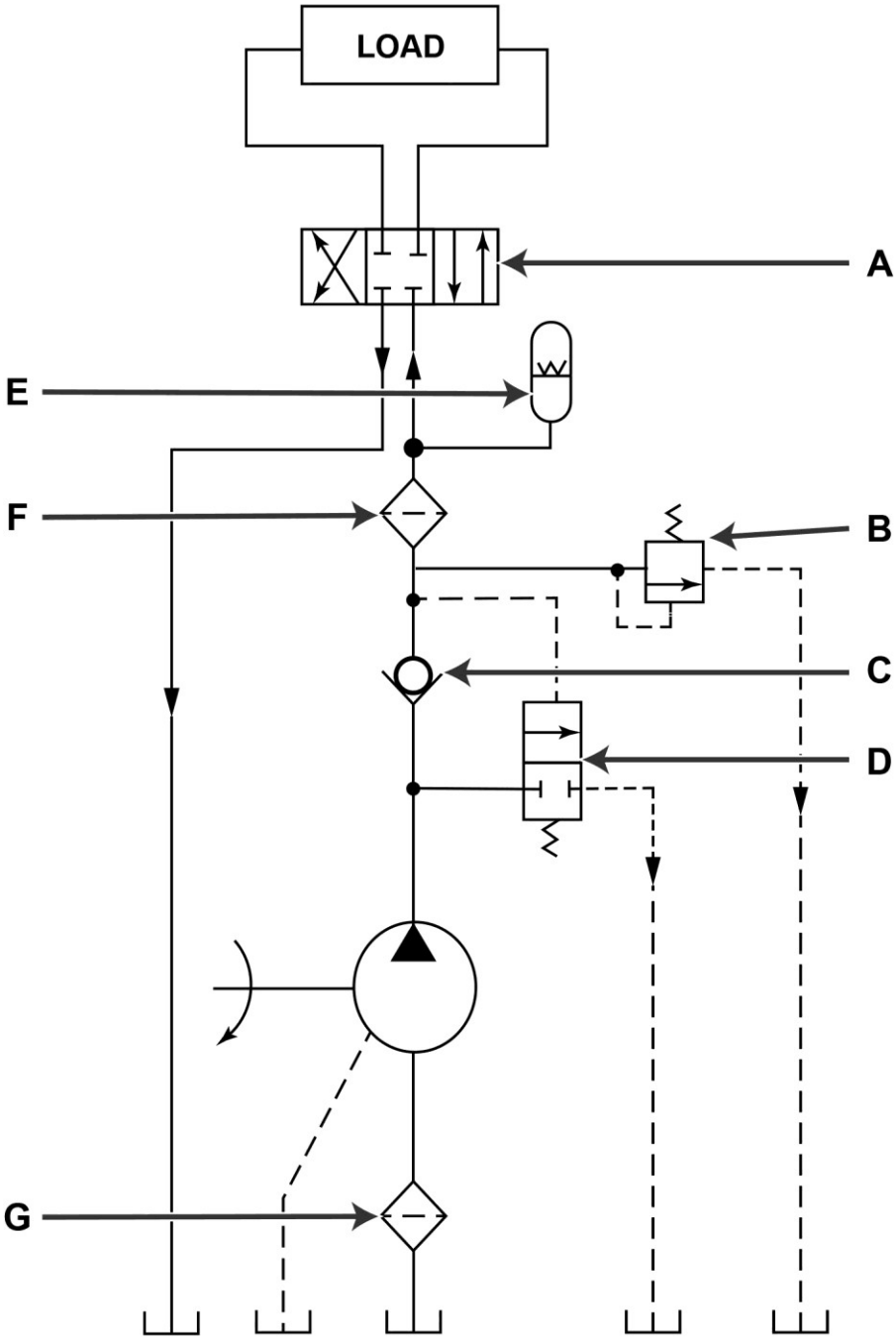

Adapted for testing purposes only from HARRINGTON, Marine Engineering
Copyright © 1992 by The Society of Naval Architects and Marine Engineers
Further reproduction prohibited without permission

GS-0053

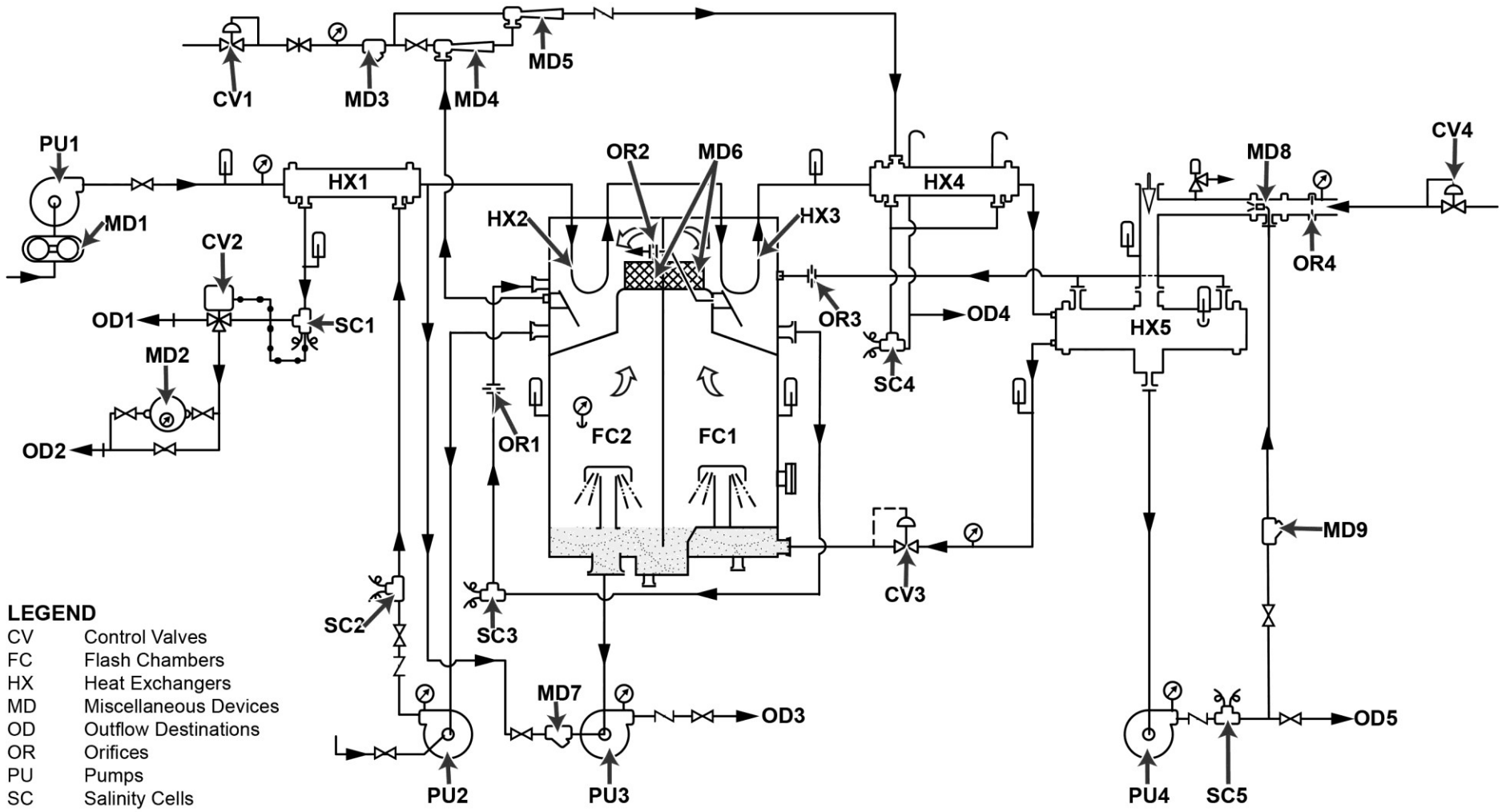

Adapted for testing purposes only from HUNT, Modern Marine Engineer's Manual
Copyright © 1999 by Cornell Maritime Press, Inc.
Further reproduction prohibited without permission

GS-0106

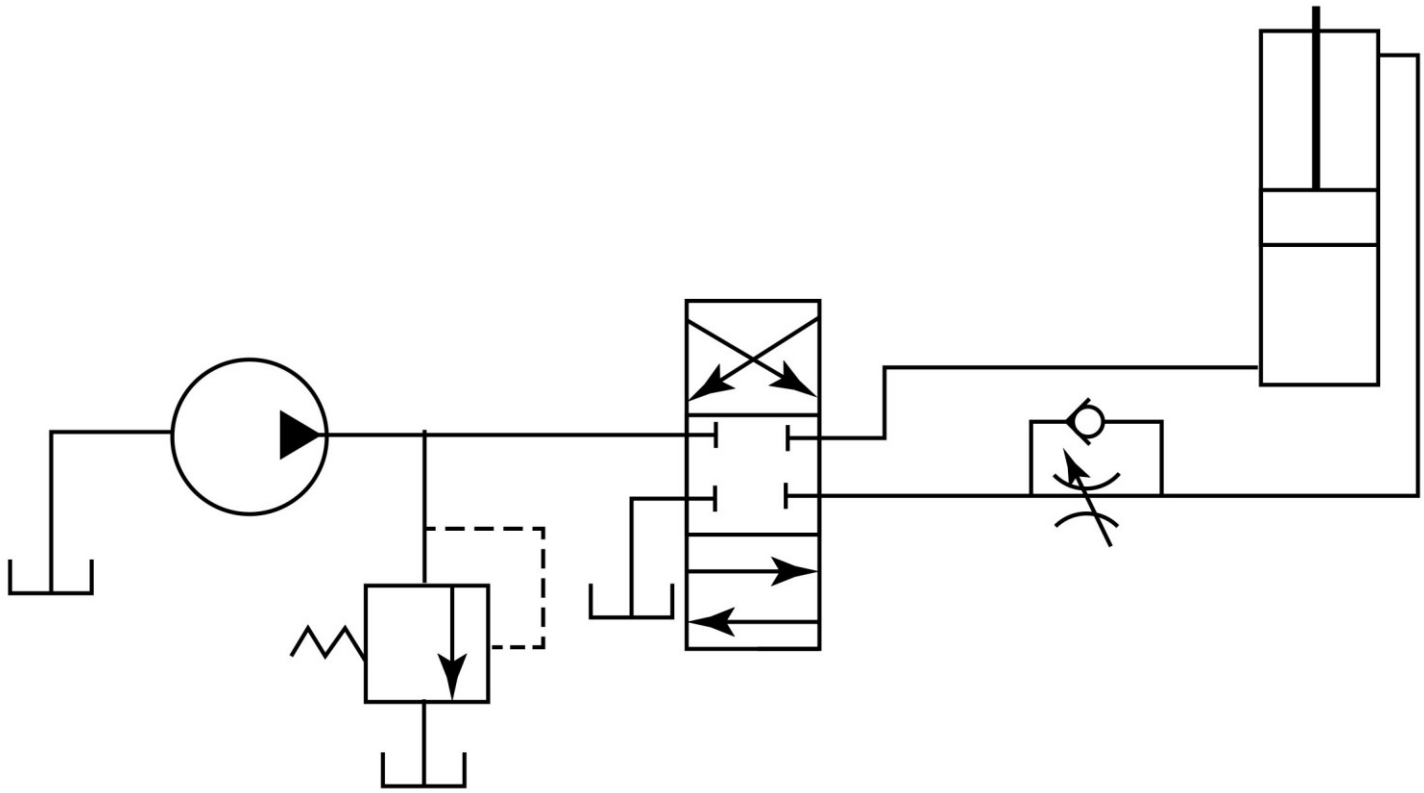

Adapted for testing purposes only from STUTMAN, Applied Marine Hydraulics
Copyright © 1988 by Cornell Maritime Press, Inc.
Further reproduction prohibited without permission

GS-0116

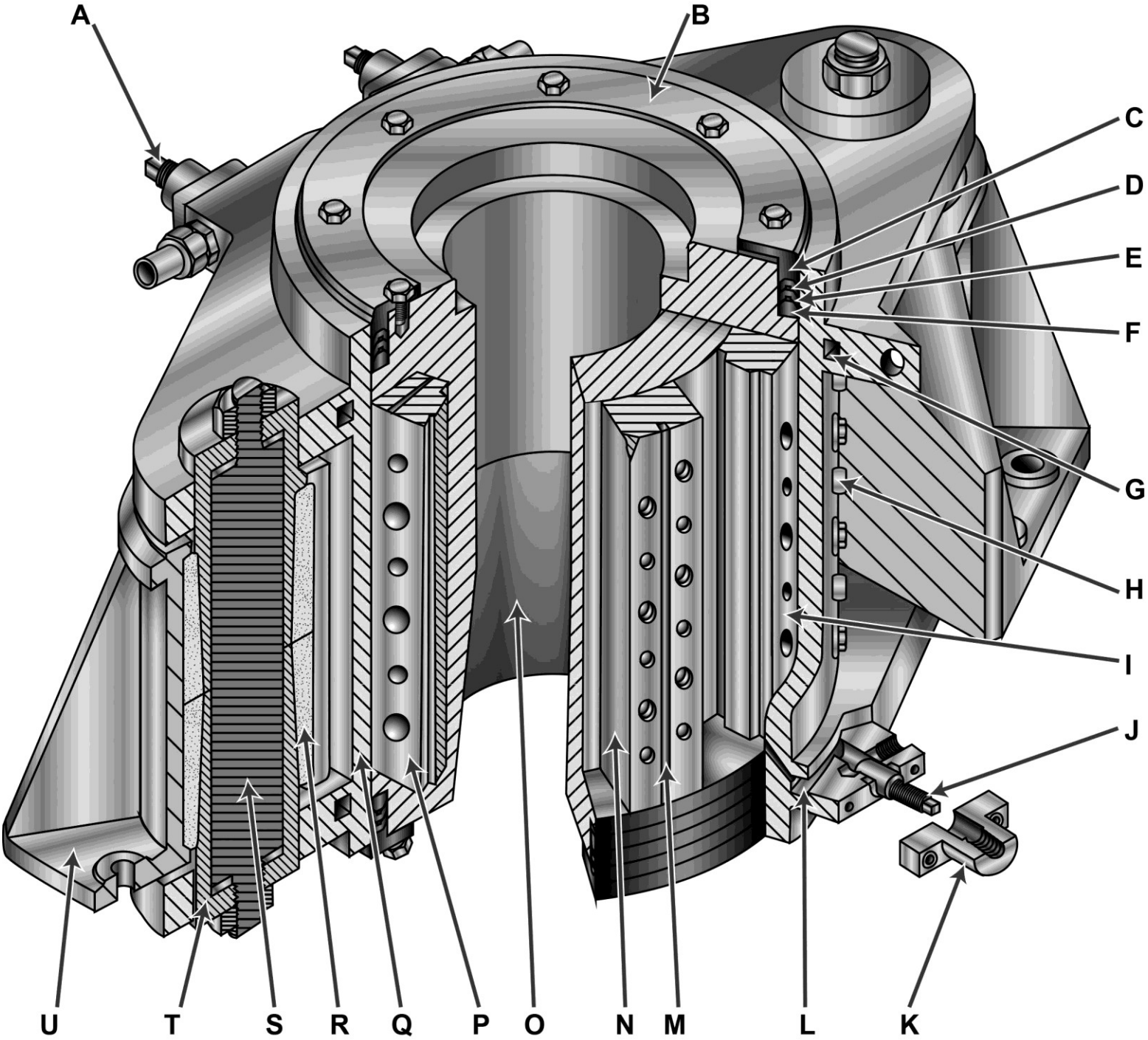

Adapted for testing purposes only from HUNT, Modern Marine Engineer's Manual, Volume II
Copyright © 2002 by Cornell Maritime Press, Inc.
Further reproduction prohibited without permission

GS-0123

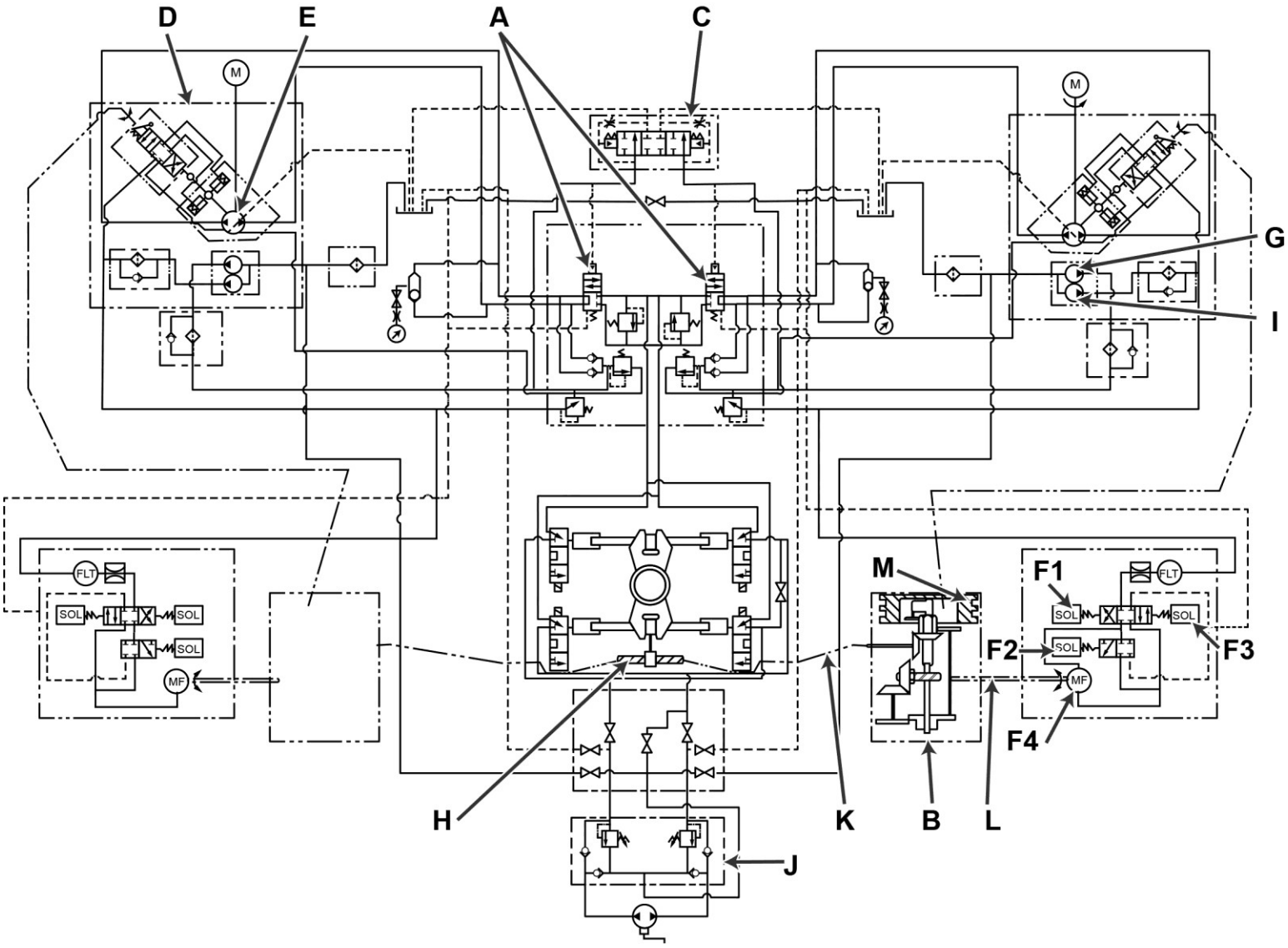

Adapted for testing purposes only from STUTMAN, Applied Marine Hydraulics
Copyright © 1988 by Cornell Maritime Press, Inc.
Further reproduction prohibited without permission

GS-0153

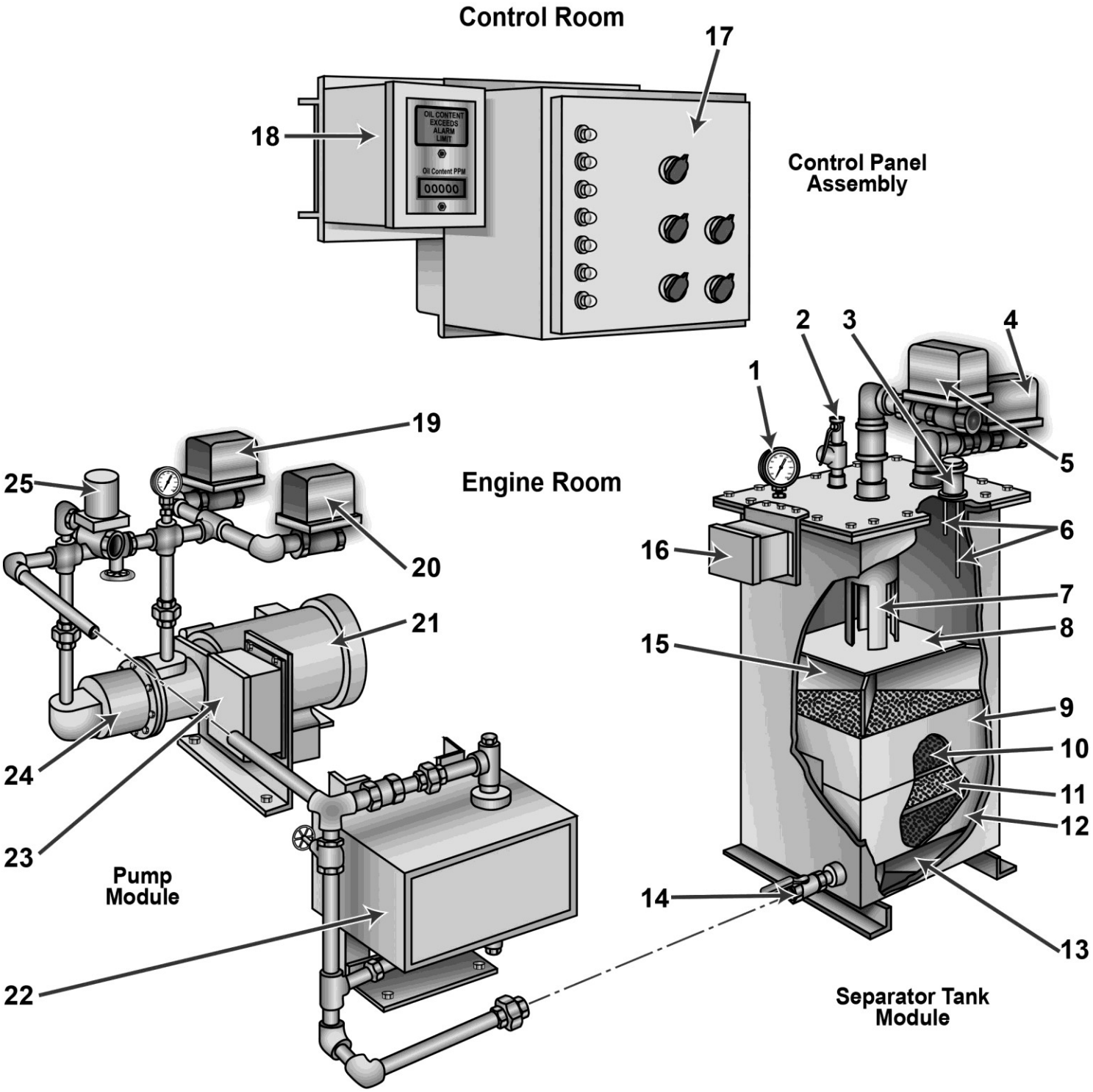

Adapted for testing purposes only from Operator, Unit and Direct Support Maintenance Manual Including Repair Parts and Special Tools List for Oil Water Separator TM 55-1925-285-13 & P

Further reproduction prohibited without permission

GS-0175

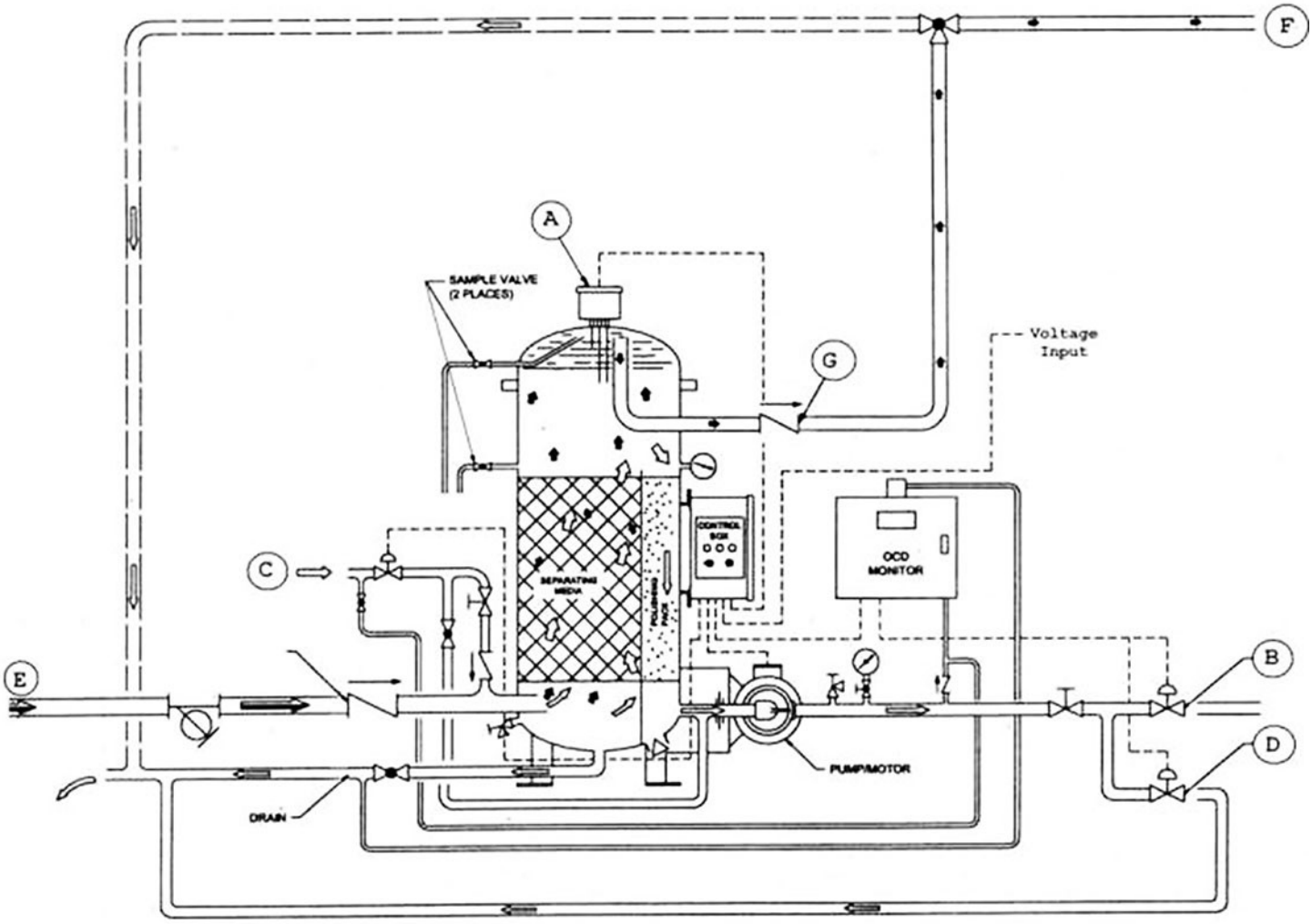

Adapted for testing purposes only from Heli-Sep Model 550/OCD Technical Manual
Copyright © by Coffin World Water Systems
Further reproduction prohibited without permission

MO-0110

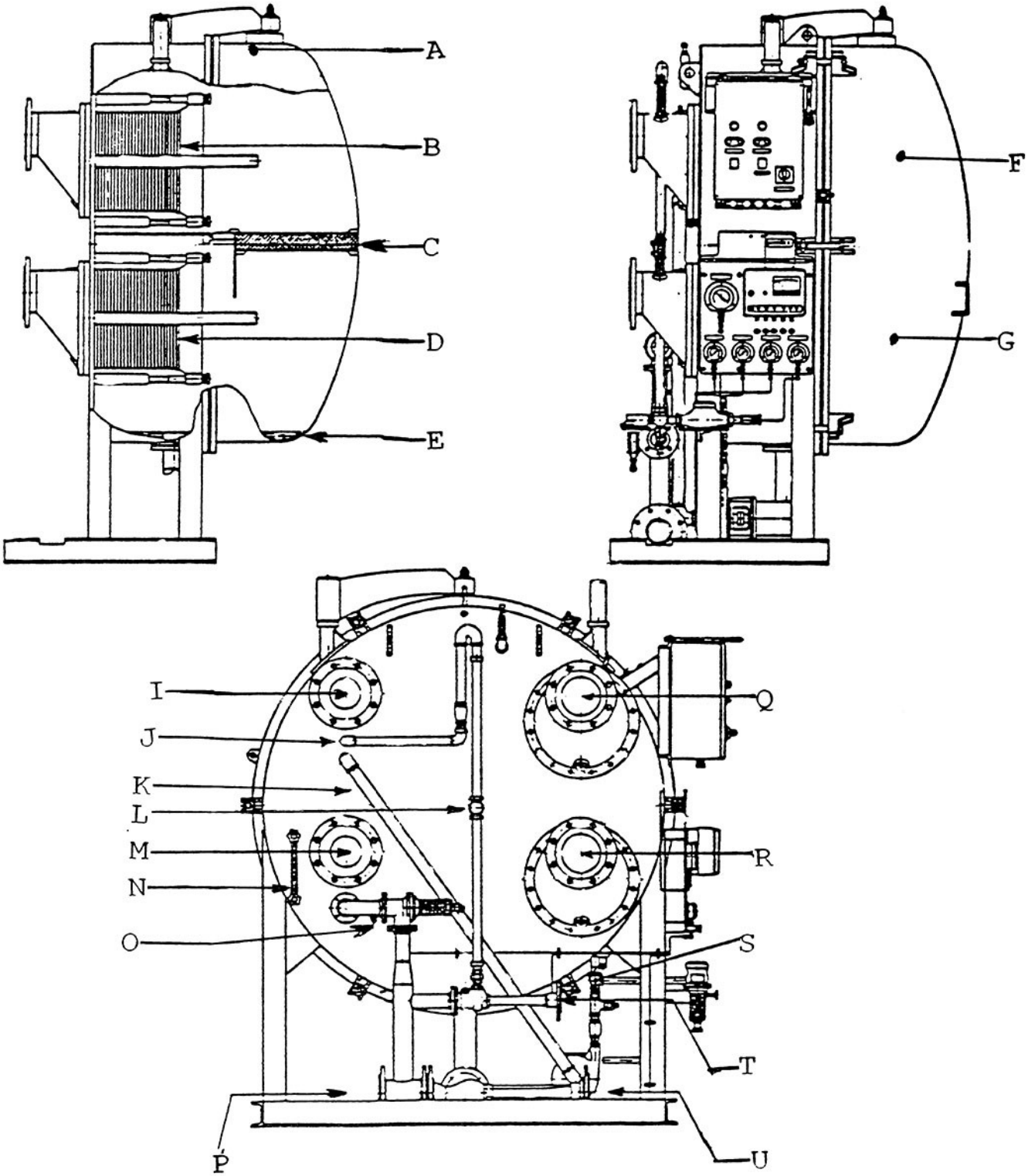

Adapted for testing purposes only
Further reproduction prohibited without permission.

MO-0111

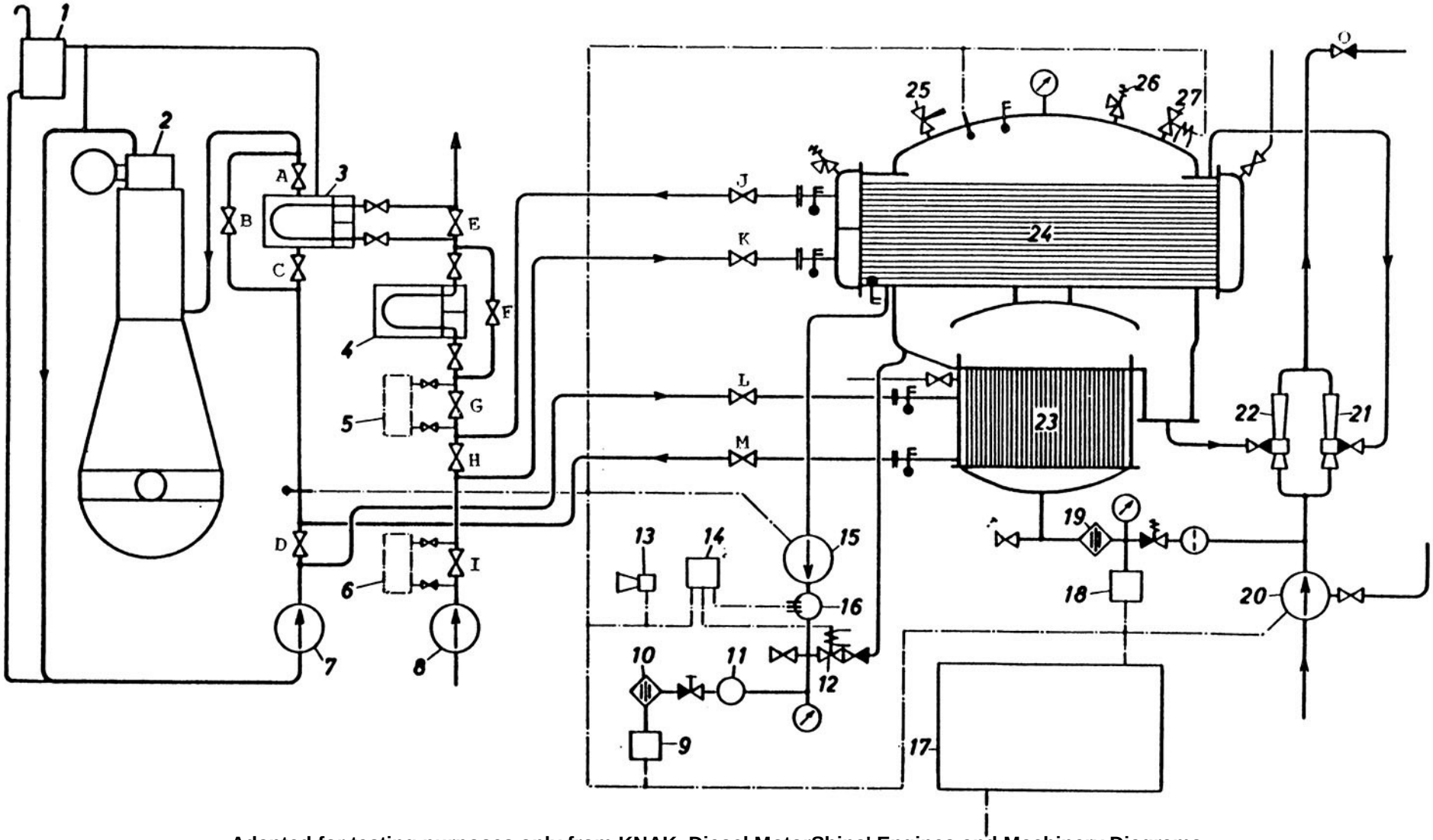

Adapted for testing purposes only from KNAK, Diesel MotorShips' Engines and Machinery Diagrams
Copyright © 1979 The Institute of Marine Engineers.
Further reproduction prohibited without permission.

MP-CW-06

Fresh Water Cooling Systems

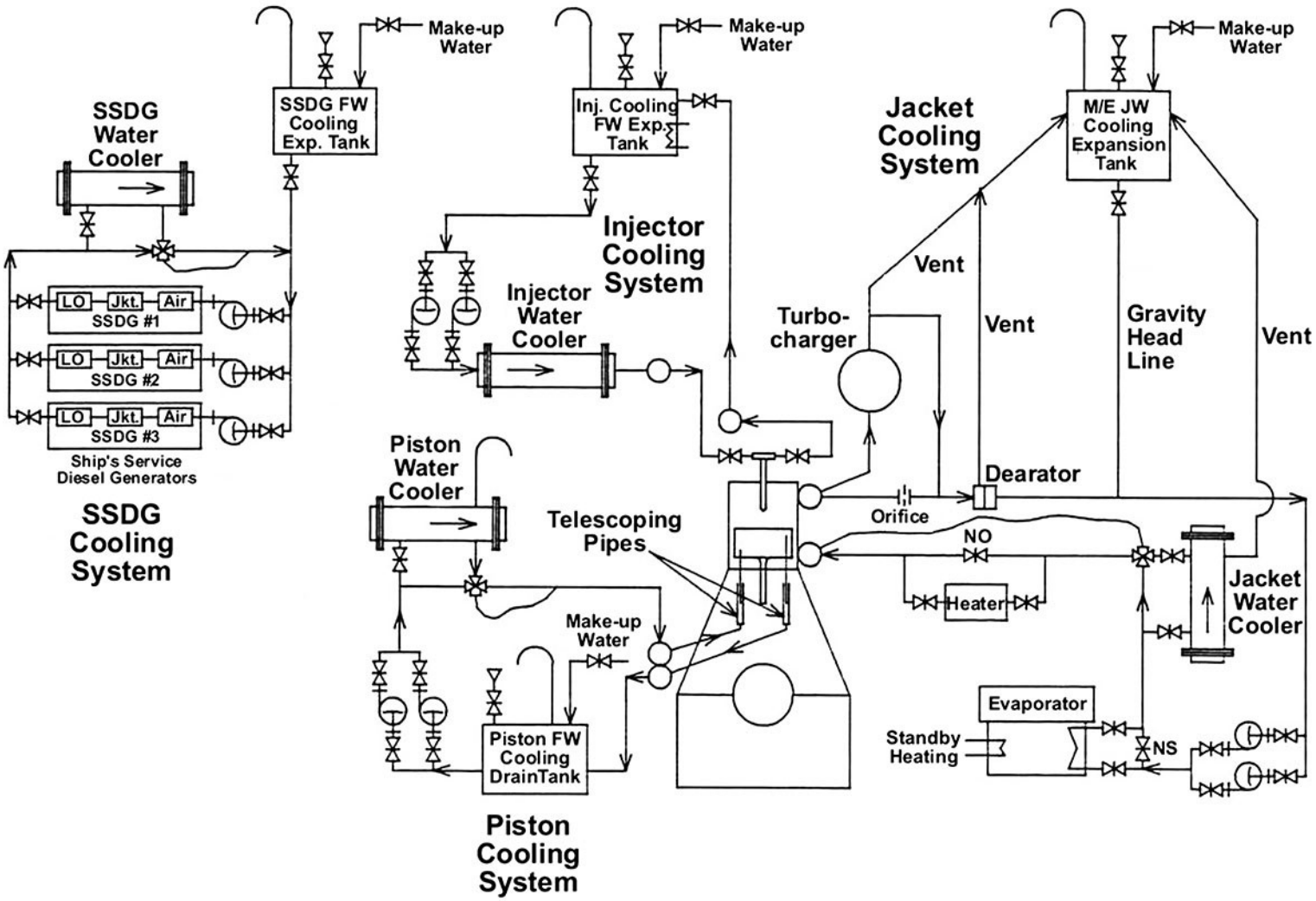

Adapted for testing purposes only from HUNT,
Modern Marine Engineer's Manual, Vol. II
Copyright © 2002 from Cornell Maritime Press, Inc.
Further reproduction prohibited without permission

SP-SW-01

Sea Water Cooling Systems

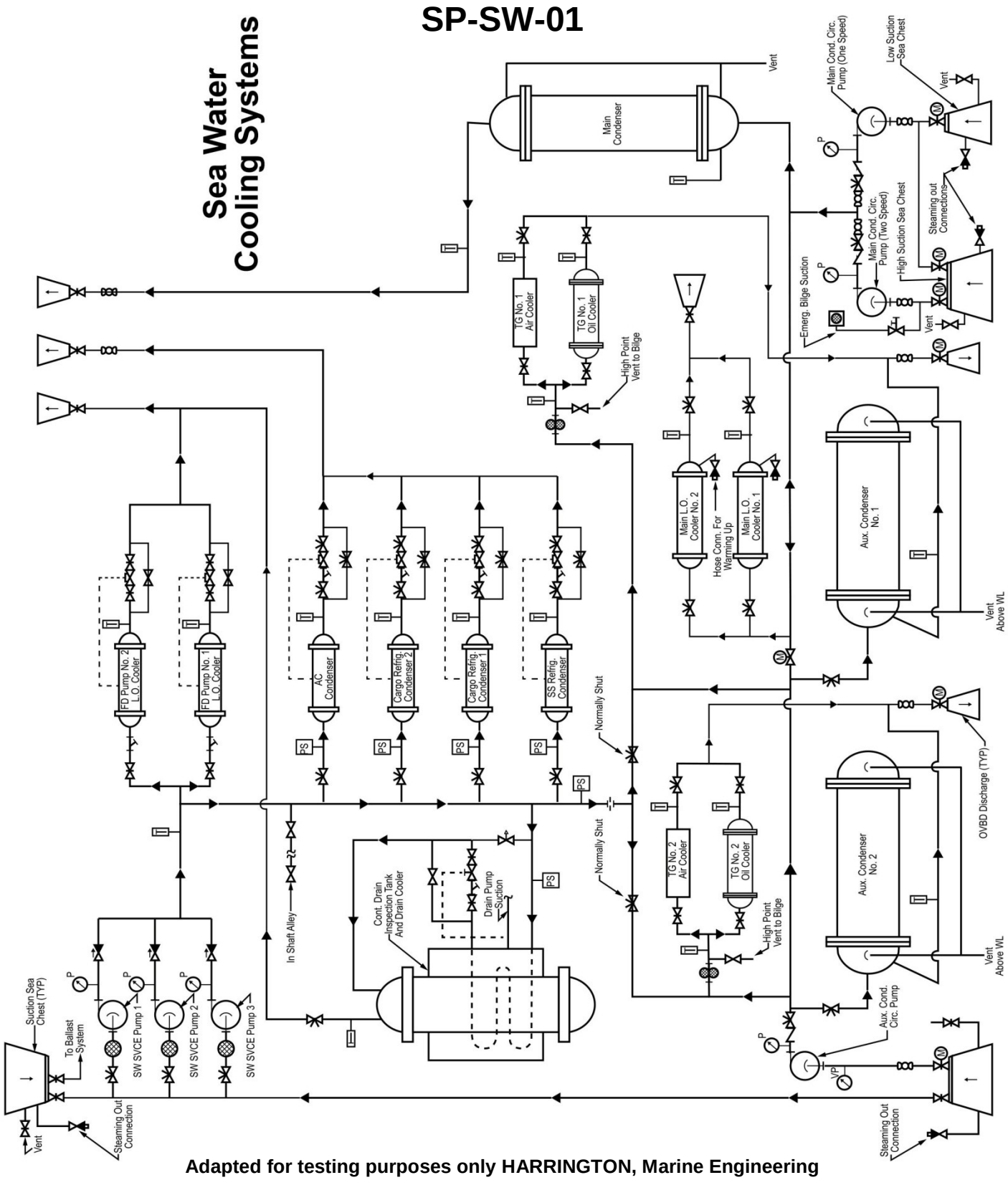

Adapted for testing purposes only HARRINGTON, Marine Engineering
Copyright © 1992 by The Society of Naval Architects and Marine Engineers
Further reproduction prohibited without permission