INTERNATIONAL MARITIME ORGANIZATION

IMO

E

MARITIME SAFETY COMMITTEE
82nd session
Agenda item 24

MSC 82/24/Add.1
12 January 2007
Original: ENGLISH

REPORT OF THE MARITIME SAFETY COMMITTEE ON ITS EIGHTY-SECOND SESSION

Attached are annexes 1 to 13 to the report of the Maritime Safety Committee on its eighty-second session (MSC 82/24).

For reasons of economy, this document is printed in a limited number. Delegates are kindly asked to bring their copies to meetings and not to request additional copies.

LIST OF ANNEXES

ANNEX 1	RESOLUTION MSC.215(82) – PERFORMANCE STANDARD FOR PROTECTIVE COATINGS FOR DEDICATED SEAWATER BALLAST TANKS IN ALL TYPES OF SHIPS AND DOUBLE-SIDE SKIN SPACES OF BULK CARRIERS
ANNEX 2	RESOLUTION MSC.216(82) – ADOPTION OF AMENDMENTS TO THE INTERNATIONAL CONVENTION FOR THE SAFETY OF LIFE AT SEA, 1974, AS AMENDED
ANNEX 3	RESOLUTION MSC.217(82) – ADOPTION OF AMENDMENTS TO THE INTERNATIONAL CODE FOR FIRE SAFETY SYSTEMS
ANNEX 4	RESOLUTION MSC.218(82) – ADOPTION OF AMENDMENTS TO THE INTERNATIONAL LIFE-SAVING APPLIANCE (LSA) CODE
ANNEX 5	RESOLUTION MSC.219(82) – ADOPTION OF AMENDMENTS TO THE INTERNATIONAL CODE FOR THE CONSTRUCTION AND EQUIPMENT OF SHIPS CARRYING DANGEROUS CHEMICALS IN BULK
ANNEX 6	RESOLUTION MSC.220(82) – ADOPTION OF AMENDMENTS TO THE INTERNATIONAL CODE FOR THE CONSTRUCTION AND EQUIPMENT OF SHIPS CARRYING LIQUEFIED GASES IN BULK
ANNEX 7	RESOLUTION MSC.221(82) – ADOPTION OF AMENDMENTS TO THE INTERNATIONAL CODE OF SAFETY FOR HIGH-SPEED CRAFT (1994 HSC CODE)
ANNEX 8	RESOLUTION MSC.222(82) – ADOPTION OF AMENDMENTS TO THE INTERNATIONAL CODE OF SAFETY FOR HIGH-SPEED CRAFT, 2000
ANNEX 9	RESOLUTION MSC.223(82) – ADOPTION OF AMENDMENTS TO THE PROTOCOL OF 1988 RELATING TO THE INTERNATIONAL CONVENTION ON LOAD LINES, 1966, AS AMENDED
ANNEX 10	RESOLUTION MSC.224(82) – ADOPTION OF AMENDMENTS TO THE CODE OF SAFETY FOR DYNAMICALLY SUPPORTED CRAFT, AS AMENDED
ANNEX 11	RESOLUTION MSC.225(82) – ADOPTION OF AMENDMENTS TO THE CODE FOR THE CONSTRUCTION AND EQUIPMENT OF SHIPS CARRYING LIQUEFIED GASES IN BULK, AS AMENDED
ANNEX 12	RESOLUTION MSC.226(82) – ADOPTION OF AMENDMENTS TO THE REVISED RECOMMENDATION ON TESTING OF LIFE-SAVING APPLIANCES, AS AMENDED

ANNEX 13 RESOLUTION MSC.227(82) – ADOPTION OF AMENDMENTS TO THE PROTOCOL OF 1988 RELATING TO THE INTERNATIONAL CONVENTION FOR THE SAFETY OF LIFE AT SEA, 1974

(See document MSC 82/24/Add.2 for annexes 14 to 38)

***

ANNEX 1

RESOLUTION MSC.215(82)

(adopted on 8 December 2006)

PERFORMANCE STANDARD FOR PROTECTIVE COATINGS FOR DEDICATED SEAWATER BALLAST TANKS IN ALL TYPES OF SHIPS AND DOUBLE-SIDE SKIN SPACES OF BULK CARRIERS

THE MARITIME SAFETY COMMITTEE,

RECALLING Article 28(b) of the Convention on the International Maritime Organization concerning the functions of the Committee,

NOTING the amendments to regulations II-1/3-2 and XII/6 of the International Convention for the Safety of Life at Sea (SOLAS), 1974, as amended (hereinafter referred to as "the Convention") adopted by resolution MSC.216(82), concerning protective coatings of dedicated seawater ballast tanks and double-side skin spaces,

NOTING ALSO that the aforementioned regulation II-1/3-2 provides that the protective coatings referred to therein shall comply with the requirements of the Performance standard for protective coatings for dedicated seawater ballast tanks in all types of ships and double-side skin spaces of bulk carriers (hereinafter referred to as "the Performance standard for protective coatings"),

RECOGNIZING that the Performance standard for protective coatings referred to above is not intended to inhibit the development of new or novel technologies which provide for alternative systems,

HAVING CONSIDERED, at its eighty-second session, the text of the proposed Performance standard for protective coatings,

1. ADOPTS the Performance standard for protective coatings for dedicated seawater ballast tanks in all types of ships and double-side skin spaces of bulk carriers, the text of which is set out in the Annex to the present resolution;

2. INVITES Contracting Governments to the Convention to note that the Performance standard for protective coatings will take effect on 1 July 2008 upon entry into force of the amendments to regulations II-1/3-2 and XII/6 of the Convention;

3. REQUESTS the Secretary-General to transmit certified copies of this resolution and the text of the Performance standard for protective coatings contained in the Annex to all Contracting Governments to the Convention;

4. FURTHER REQUESTS the Secretary-General to transmit copies of this resolution and the Annex to all Members of the Organization which are not Contracting Governments to the Convention;

5. INVITES Governments to encourage the development of novel technologies aimed at providing for alternative systems and to keep the Organization advised of any positive results.

ANNEX

PERFORMANCE STANDARD FOR PROTECTIVE COATINGS FOR DEDICATED SEAWATER BALLAST TANKS IN ALL TYPES OF SHIPS AND DOUBLE-SIDE SKIN SPACES OF BULK CARRIERS

1 PURPOSE

This Standard provides technical requirements for protective coatings in dedicated seawater ballast tanks of all type of ships of not less than 500 gross tonnage and double-side skin spaces arranged in bulk carriers of 150 m in length and upwards[1] for which the building contract is placed, the keels of which are laid or which are delivered on or after the dates referred to in SOLAS regulation II-1/3-2 as adopted by resolution MSC.216(82).

2 DEFINITIONS

For the purpose of this Standard, the following definitions apply.

2.1 *Ballast tanks* are those as defined in the Guidelines for the selection, application and maintenance of corrosion prevention systems of dedicated seawater ballast tanks (resolution A.798(19)) and the Guidelines on the enhanced programme of inspections during surveys of bulk carriers and oil tankers (resolution A.744(18), as amended).

2.2 *Dew point* is the temperature at which air is saturated with moisture.

2.3 *DFT* is dry film thickness.

2.4 *Dust* is loose particle matter present on a surface prepared for painting, arising from blast-cleaning or other surface preparation processes, or resulting from the action of the environment.

2.5 *Edge grinding* is the treatment of edge before secondary surface preparation.

2.6 "*GOOD*" *condition* is the condition with minor spot rusting as defined in resolution A.744(18).

2.7 *Hard coating* is a coating that chemically converts during its curing process or a non-convertible air drying coating which may be used for maintenance purposes. It can be either inorganic or organic.

2.8 *NDFT* is the nominal dry film thickness. A 90/10 practice means that 90% of all thickness measurements shall be greater than, or equal to, NDFT and none of the remaining 10% measurements shall be below 0.9 x NDFT.

2.9 *Primer coat* is the first coat of the coating system applied in the shipyard after shop-primer application.

---

[1] This Standard applies only to dedicated seawater ballast tanks in all types of ships and double-side skin spaces in bulk carriers which are constructed of steel.

2.10 *Shop-primer* is the prefabrication primer coating applied to steel plates, often in automatic plants (and before the first coat of a coating system).

2.11 *Stripe coating* is painting of edges, welds, hard to reach areas, etc., to ensure good paint adhesion and proper paint thickness in critical areas.

2.12 *Target useful life* is the target value, in years, of the durability for which the coating system is designed.

2.13 *Technical Data Sheet* is paint manufacturers' Product Data Sheet which contains detailed technical instruction and information relevant to the coating and its application.

3 GENERAL PRINCIPLES

3.1 The ability of the coating system to reach its target useful life depends on the type of coating system, steel preparation, application and coating inspection and maintenance. All these aspects contribute to the good performance of the coating system.

3.2 Inspection of surface preparation and coating processes shall be agreed upon between the shipowner, the shipyard and the coating manufacturer and presented to the Administration[2] for review. The Administration may, if it so requires, participate in the agreement process. Clear evidence of these inspections shall be reported and be included in the Coating Technical File (CTF) (see 3.4).

3.3 When considering the Standard provided in section 4, the following is to be taken into account:

.1 it is essential that specifications, procedures and the various different steps in the coating application process (including, but not limited to, surface preparation) are strictly applied by the shipbuilder in order to prevent premature decay and/or deterioration of the coating system;

.2 the coating performance can be improved by adopting measures at the ship design stage such as reducing scallops, using rolled profiles, avoiding complex geometric configurations and ensuring that the structural configuration permits easy access for tools and to facilitate cleaning, drainage and drying of the space to be coated; and

.3 the coating performance standard provided in this document is based on experience from manufacturers, shipyards and ship operators; it is not intended to exclude suitable alternative coating systems, providing a performance at least equivalent to that specified in this Standard is demonstrated. Acceptance criteria for alternative systems are provided in section 8.

[2] In accordance with SOLAS regulation I/6, for the purposes of this Standard, the Administration may entrust a recognized organization acting on its behalf to determine compliance with the provisions of this Standard.

3.4 Coating Technical File

3.4.1 Specification of the coating system applied to the dedicated seawater ballast tanks and double-side skin spaces, record of the shipyard's and shipowner's coating work, detailed criteria for coating selection, job specifications, inspection, maintenance and repair[3] shall be documented in the Coating Technical File (CTF), and the Coating Technical File shall be reviewed by the Administration.

3.4.2 ***New construction stage***

The Coating Technical File shall contain at least the following items relating to this Standard and shall be delivered by the shipyard at new ship construction stage:

.1 copy of Statement of Compliance or Type Approval Certificate;

.2 copy of Technical Data Sheet, including:

.2.1 product name and identification mark and/or number;
.2.2 materials, components and composition of the coating system, colours;
.2.3 minimum and maximum dry film thickness;
.2.4 application methods, tools and/or machines;
.2.5 condition of surface to be coated (de-rusting grade, cleanness, profile, etc.); and
.2.6 environmental limitations (temperature and humidity);

.3 shipyard work records of coating application, including:

.3.1 applied actual space and area (in square metres) of each compartment;
.3.2 applied coating system;
.3.3 time of coating, thickness, number of layers, etc.;
.3.4 ambient condition during coating; and
.3.5 method of surface preparation;

.4 procedures for inspection and repair of coating system during ship construction;

.5 coating log issued by the coating inspector, stating that the coating was applied in accordance with the specifications to the satisfaction of the coating supplier representative and specifying deviations from the specifications (example of daily log and non-conformity report (see annex 2));

.6 shipyard's verified inspection report, including:

.6.1 completion date of inspection;
.6.2 result of inspection;
.6.3 remarks (if given); and
.6.4 inspector signature; and

[3] Guidelines to be developed by the Organization.

.7 procedures for in-service maintenance and repair of coating system.

3.4.3 ***In-service maintenance, repair and partial re-coating***

In-service maintenance, repair and partial re-coating activities shall be recorded in the Coating Technical File in accordance with the relevant section of the Guidelines for coating maintenance and repair[4].

3.4.4 ***Re-coating***

If a full re-coating is carried out, the items specified in 3.4.2 shall be recorded in the Coating Technical File.

3.4.5 The Coating Technical File shall be kept on board and maintained throughout the life of the ship.

3.5 Health and safety

The shipyard is responsible for implementation of national regulations to ensure the health and safety of individuals and to minimize the risk of fire and explosion.

4 COATING STANDARD

4.1 Performance standard

This Standard is based on specifications and requirements which intend to provide a target useful coating life of 15 years, which is considered to be the time period, from initial application, over which the coating system is intended to remain in "GOOD" condition. The actual useful life will vary, depending on numerous variables including actual conditions encountered in service.

4.2 Standard application

Protective coatings for dedicated seawater ballast tanks of all ship types and double-side skin spaces arranged in bulk carriers of 150 m in length and upwards shall at least comply with the requirements in this Standard.

4.3 Special application

4.3.1 This Standard covers protective coating requirements for the ship's steel structure. It is noted that other independent items are fitted within the tanks to which coatings are applied to provide protection against corrosion.

[4] Guidelines to be developed by the Organization.

4.3.2 It is recommended that this Standard is applied, to the extent possible, to those portions of permanent means of access provided for inspection not integral to the ship's structure, such as rails, independent platforms, ladders, etc. Other equivalent methods of providing corrosion protection for the non-integral items may also be used, provided they do not impair the performance of the coatings of the surrounding structure. Access arrangements that are integral to the ship structure, such as increased stiffener depths for walkways, stringers, etc., are to fully comply with this Standard.

4.3.3 It is also recommended that supports for piping, measuring devices, etc., be coated in accordance with the non-integral items indicated in 4.3.2.

4.4 Basic coating requirements

4.4.1 The requirements for protective coating systems to be applied at ship construction for dedicated seawater ballast tanks of all ship types and double-side skin spaces arranged in bulk carriers of 150 m in length and upwards meeting the performance standard specified in 4.1 are listed in table 1.

4.4.2 Coating manufacturers shall provide a specification of the protective coating system to satisfy the requirements of table 1.

4.4.3 The Administration shall verify the Technical Data Sheet and Statement of Compliance or Type Approval Certificate for the protective coating system.

4.4.4 The shipyard shall apply the protective coating in accordance with the verified Technical Data Sheet and its own verified application procedures.

Table 1 – Basic coating system requirements for dedicated seawater ballast tanks of all type of ships and double-side skin spaces of bulk carriers of 150 m and upwards

	Characteristic/ Reference standards	Requirement
1	**Design of coating system**	
.1	Selection of the coating system	The selection of the coating system shall be considered by the parties involved with respect to the service conditions and planned maintenance. The following aspects, among other things shall be considered: .1 location of space relative to heated surfaces; .2 frequency of ballasting and deballasting operations; .3 required surface conditions; .4 required surface cleanliness and dryness; and .5 supplementary cathodic protections, if any (where coating is supplemented by cathodic protection, the coating shall be compatible with the cathodic protection system). Coating manufacturers shall have products with documented satisfactory performance records and technical data sheets. The manufacturers shall also be capable of rendering adequate technical assistance. Performance records, technical data sheet and technical assistance (if given) shall be recorded in the Coating Technical File. Coatings for application underneath sun-heated decks or on bulkheads forming boundaries of heated spaces shall be able to withstand repeated heating and/or cooling without becoming brittle.

.2	Coating type	Epoxy-based systems. Other coating systems with performance according to the test procedure in annex 1. A multi-coat system with each coat of contrasting colour is recommended. The top coat shall be of a light colour in order to facilitate in-service inspection.
.3	Coating pre-qualification test	Epoxy-based systems tested prior to the date of entry into force of this Standard in a laboratory by a method corresponding to the test procedure in annex 1 or equivalent, which as a minimum meets the requirements for rusting and blistering; or which have documented field exposure for 5 years with a final coating condition of not less than "GOOD" may be accepted. For all other systems, testing according to the procedure in annex 1, or equivalent, is required.
.4	Job specification	There shall be a minimum of two stripe coats and two spray coats, except that the second stripe coat, by way of welded seams only, may be reduced in scope where it is proven that the NDFT can be met by the coats applied, in order to avoid unnecessary over-thickness. Any reduction in scope of the second stripe coat shall be fully detailed in the CTF. Stripe coats shall be applied by brush or roller. Roller to be used for scallops, ratholes, etc., only. Each main coating layer shall be appropriately cured before application of the next coat, in accordance with coating manufacturer's recommendations. Surface contaminants such as rust, grease, dust, salt, oil, etc., shall be removed prior to painting with proper method according to the paint manufacturer's recommendation. Abrasive inclusions embedded in the coating shall be removed. Job specifications shall include the dry-to-recoat times and walk-on time given by the manufacturer.
.5	NDFT (nominal total dry film thickness)[5]	NDFT 320 µm with 90/10 rule for epoxy-based coatings; other systems to coating manufacturer's specifications. Maximum total dry film thickness according to manufacturer's detailed specifications. Care shall be taken to avoid increasing the thickness in an exaggerated way. Wet film thickness shall be regularly checked during application. Thinner shall be limited to those types and quantities recommended by the manufacturer.

[5] Type of gauge and calibration in accordance with SSPC-PA2:2004. Paint Application Specification No.2.

2 PSP (Primary surface preparation)		
.1	Blasting and profile [6,7]	Sa 2½; with profiles between 30-75 µm Blasting shall not be carried out when: .1 the relative humidity is above 85%; or .2 the surface temperature of steel is less than 3°C above the dew point. Checking of the steel surface cleanliness and roughness profile shall be carried out at the end of the surface preparation and before the application of the primer, in accordance with the manufacturer's recommendations.
.2	Water soluble salt limit equivalent to NaCl [8]	≤ 50 mg/m^2 of sodium chloride.
.3	Shop primer	Zinc containing inhibitor free zinc silicate based or equivalent. Compatibility with main coating system shall be confirmed by the coating manufacturer.
3 Secondary surface preparation		
.1	Steel condition[9]	The steel surface shall be prepared so that the coating selected can achieve an even distribution at the required NDFT and have an adequate adhesion by removing sharp edges, grinding weld beads and removing weld spatter and any other surface contaminant. Edges shall be treated to a rounded radius of minimum 2 mm, or subjected to three pass grinding or at least equivalent process before painting.
.2	Surface treatment[6]	Sa 2½ on damaged shop primer and welds. Sa 2 removing at least 70% of intact shop primer, which has not passed a pre-qualification certified by test procedures in 1.3. If the complete coating system comprising epoxy-based main coating and shop primer has passed a pre-qualification certified by test procedures in 1.3, intact shop primer may be retained provided the same epoxy coating system is used. The retained shop primer shall be cleaned by sweep blasting, high-pressure water washing or equivalent method. If a zinc silicate shop primer has passed the pre-qualification test of 1.3 as part of an epoxy coating system, it may be used in combination with other epoxy coatings certified under 1.3, provided that the compatibility has been confirmed by the manufacturer by the test in accordance with 1.7 of appendix 1 to annex 1 without wave movement.

6 Reference standard: ISO 8501-1:1988/Suppl:1994. Preparation of steel substrate before application of paints and related products – Visual assessment of surface cleanliness.

7 Reference standard: ISO 8503-1/2:1988. Preparation of steel substrate before application of paints and related products – Surface roughness characteristics of blast-cleaned steel substrates.

8 Conductivity measured in accordance with ISO 8502-9:1998. Preparation of steel substrate before application of paints and related products – Test for the assessment of surface cleanliness.

9 Reference standard: ISO 8501-3:2001 (grade P2). Preparation of steel substrate before application of paints and related products – Visual assessment of surface cleanliness.

.3	Surface treatment after erection[6]	Butts St 3 or better or Sa 2½ where practicable. Small damages up to 2% of total area: St 3. Contiguous damages over 25 m^2 or over 2% of the total area of the tank, Sa 2½ shall be applied. Coating in overlap shall be feathered.
.4	Profile requirements[7]	In case of full or partial blasting 30-75 µm, otherwise as recommended by the coating manufacturer.
.5	Dust[9]	Dust quantity rating "1" for dust size class "3", "4" or "5". Lower dust size classes to be removed if visible on the surface to be coated without magnification.
.6	Water soluble salts limit equivalent to NaCl after blasting/ grinding[8]	≤ 50 mg/m^2 of sodium chloride. .
.7	Oil contamination	No oil contamination.
4 Miscellaneous		
.1	Ventilation	Adequate ventilation is necessary for the proper drying and curing of coating. Ventilation should be maintained throughout the application process and for a period after application is completed, as recommended by the coating manufacturer.
.2	Environmental conditions	Coating shall be applied under controlled humidity and surface conditions, in accordance with the manufacturer's specifications. In addition, coating shall not be applied when: .1 the relative humidity is above 85%; or .2 the surface temperature is less than 3°C above the dew point.
.3	Testing of coating[5]	Destructive testing shall be avoided. Dry film thickness shall be measured after each coat for quality control purpose and the total dry film thickness shall be confirmed after completion of final coat, using appropriate thickness gauges (see annex 3).
.4	Repair	Any defective areas, e.g., pin-holes, bubbles, voids, etc., shall be marked up and appropriate repairs effected. All such repairs shall be re-checked and documented.

5 COATING SYSTEM APPROVAL

Results from prequalification tests (table 1, paragraph 1.3) of the coating system shall be documented and a Statement of Compliance or Type Approval Certificate shall be issued if found satisfactory by a third party, independent of the coating manufacturer.

---

5 Type of gauge and calibration in accordance with SSPC-PA2:2004. Paint Application Specification No.2.

6 Reference standard: ISO 8501-1:1988/Suppl:1994. Preparation of steel substrate before application of paints and related products – Visual assessment of surface cleanliness.

7 Reference standard: ISO 8503-1/2:1988. Preparation of steel substrate before application of paints and related products – Surface roughness characteristics of blast-cleaned steel substrates.

8 Conductivity measured in accordance with ISO 8502-9:1998. Preparation of steel substrate before application of paints and related products – Test for the assessment of surface cleanliness.

9 Reference standard: ISO 8502-3:1993. Preparation of steel substrate before application of paints and related products – Test for the assessment of surface cleanliness.

6 COATING INSPECTION REQUIREMENTS

6.1 General

6.1.1 To ensure compliance with this Standard, the following shall be carried out by qualified coating inspectors certified to NACE Coating Inspector Level 2, FROSIO Inspector Level III or equivalent as verified by the Administration.

6.1.2 Coating inspectors shall inspect surface preparation and coating application during the coating process by carrying out, as a minimum, those inspection items identified in section 6.2 to ensure compliance with this Standard. Emphasis shall be placed on initiation of each stage of surface preparation and coatings application as improper work is extremely difficult to correct later in the coating progress. Representative structural members shall be non-destructively examined for coating thickness. The inspector shall verify that appropriate collective measures have been carried out.

6.1.3 Results from the inspection shall be recorded by the inspector and shall be included in the CTF (refer to annex 2 (Example of daily log and non-conformity report)).

6.2 Inspection items

Construction stage		**Inspection items**
Primary surface preparation	1	The surface temperature of steel, the relative humidity and the dew point shall be measured and recorded before the blasting process starts and at times of sudden changes in weather.
	2	The surface of steel plates shall be tested for soluble salt and checked for oil, grease and other contamination.
	3	The cleanliness of the steel surface shall be monitored in the shop-primer application process.
	4	The shop-primer material shall be confirmed to meet the requirements of 2.3 of table 1.
Thickness		If compatibility with the main coating system has been declared, then the thickness and curing of the zinc silicate shop primer to be confirmed to conform to the specified values.
Block assembly	1	After completing construction of the block and before secondary surface preparation starts, a visual inspection for steel surface treatment including edge treatment shall be carried out. Any oil, grease or other visible contamination shall be removed.
	2	After blasting/grinding/cleaning and prior to coating, a visual inspection of the prepared surface shall be carried out. On completion of blasting and cleaning and prior to the application of the first coat of the system, the steel surface shall be tested for levels of remaining soluble salts in at least one location per block.
	3	The surface temperature, the relative humidity and the dew point shall be monitored and recorded during the coating application and curing.
	4	Inspection shall be performed of the steps in the coating application process mentioned in table 1.
	5	DFT measurements shall be taken to prove that the coating has been applied to the thickness as specified and outlined in annex 3.

Construction stage		Inspection items
Erection	1	Visual inspection for steel surface condition, surface preparation and verification of conformance to other requirements in table 1, and the agreed specification shall be performed.
	2	The surface temperature, the relative humidity and the dew point shall be measured and recorded before coating starts and regularly during the coating process.
	3	Inspection shall be performed of the steps in the coating application process mentioned in table 1.

7 VERIFICATION REQUIREMENTS

The following shall be carried out by the Administration prior to reviewing the Coating Technical File for the ship subject to this Standard:

.1 check that the Technical Data Sheet and Statement of Compliance or Type Approval Certificate comply with this Standard;

.2 check that the coating identification on representative containers is consistent with the coating identified in the Technical Data Sheet and Statement of Compliance or Type Approval Certificate;

.3 check that the inspector is qualified in accordance with the qualification standards in paragraph 6.1.1;

.4 check that the inspector's reports of surface preparation and the coating's application indicate compliance with the manufacturer's Technical Data Sheet and Statement of Compliance or Type Approval Certificate; and

.5 monitor implementation of the coating inspection requirements.

8 ALTERNATIVE SYSTEMS

8.1 All systems that are not an epoxy-based system applied according to table 1 of this Standard are defined as an alternative system.

8.2 This Standard is based on recognized and commonly used coating systems. It is not meant to exclude other, alternative, systems with proven equivalent performance, for example non epoxy-based systems.

8.3 Acceptance of alternative systems will be subject to documented evidence that they ensure a corrosion prevention performance at least equivalent to that indicated in this Standard.

8.4 As a minimum, the documented evidence shall consist of satisfactory performance corresponding to that of a coating system which conforms to the coating standard described in section 4, a target useful life of 15 years in either actual field exposure for 5 years with final coating condition not less than "GOOD" or laboratory testing. Laboratory test shall be conducted in accordance with the test procedure given in annex 1 to this Standard.

ANNEX 1

TEST PROCEDURES FOR COATING QUALIFICATION FOR DEDICATED SEAWATER BALLAST TANK OF ALL TYPES OF SHIPS AND DOUBLE-SIDE SKIN SPACES OF BULK CARRIERS

1 Scope

These Procedures provide details of the test procedure referred to in 5 and 8.3 of this Standard.

2 Definitions

Coating specification means the specification of coating systems which includes the type of coating system, steel preparation, surface preparation, surface cleanliness, environmental conditions, application procedure, acceptance criteria and inspection.

3 Testing

Coating specification shall be verified by the following tests. The test procedures shall comply with appendix 1 (Test on simulated ballast tank conditions) and appendix 2 (Condensation chamber tests) to this annex as follows:

.1 for protective coatings for dedicated seawater ballast tanks, appendix 1 and appendix 2 shall apply; and

.2 for protective coatings for double-side spaces of bulk carriers of 150 m in length and upwards other than dedicated seawater ballast tanks, appendix 2 shall apply.

APPENDIX 1

TEST ON SIMULATED BALLAST TANK CONDITIONS

1 Test condition

Test on simulated ballast tank conditions shall satisfy each of the following conditions:

.1 The test shall be carried out for 180 days.

.2 There are to be 5 test panels.

.3 The size of each test panel is 200 mm x 400 mm x 3 mm. Two of the panels (Panel 3 and 4 below) have a U-bar welded. The U-bar is welded to the panel in a 120 mm distance from one of the short sides and 80 mm from each of the long sides.

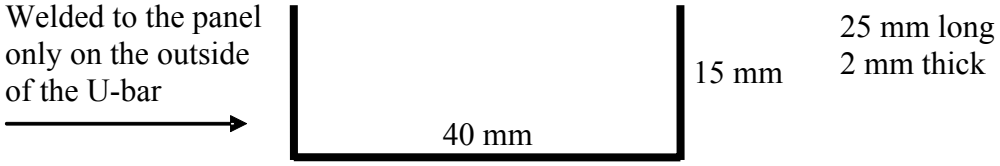

The panels are to be treated according to this Standard, table 1.1, 1.2 and 1.3, and coating system applied according to table 1, paragraphs 1.4 and 1.5. Shop primer to be weathered for at least 2 months and cleaned by low pressure washing or other mild method. Blast sweep or high pressure washing, or other primer removal methods not to be used. Weathering method and extent shall take into consideration that the primer is to be the foundation for a 15 year target useful life system. To facilitate innovation, alternative preparation, coating systems and dry film thicknesses may be used when clearly defined.

.4 The reverse side of the test piece shall be painted appropriately, in order not to affect the test results.

.5 As simulating the condition of actual ballast tank, the test cycle runs for two weeks with natural or artificial seawater and one week empty. The temperature of the seawater is to be kept at about 35°C.

.6 Test panel 1: This panel is to be heated for 12 h at 50°C and cooled for 12 h at 20°C in order to simulate upper deck condition. The test panel is cyclically splashed with natural or artificial seawater in order to simulate a ship's pitching and rolling motion. The interval of splashing is 3 s or faster. The panel has a scribe line down to bare steel across width.

.7 Test panel 2: This panel has a fixed sacrificial zinc anode in order to evaluate the effect of cathodic protection. A circular 8 mm artificial holiday down to bare steel is introduced on the test panel 100 mm from the anode in order to evaluate the

effect of the cathodic protection. The test panel is cyclically immersed with natural or artificial seawater.

.8 Test panel 3: This panel is to be cooled on the reverse side, in order to give a temperature gradient to simulate a cooled bulkhead in a ballast wing tank, and splashed with natural or artificial seawater in order to simulate a ship's pitching and rolling motion. The gradient of temperature is approximately 20°C, and the interval of splashing is 3 s or faster. The panel has a scribe line down to bare steel across width.

.9 Test panel 4: This panel is to be cyclically splashed with natural or artificial seawater in order to simulate a ship's pitching and rolling motion. The interval of splashing is 3 s or faster. The panel has a scribe line down to bare steel across width.

.10 Test panel 5: This panel is to be exposed to dry heat for 180 days at 70°C to simulate boundary plating between heated bunker tank and ballast tank in double bottom.

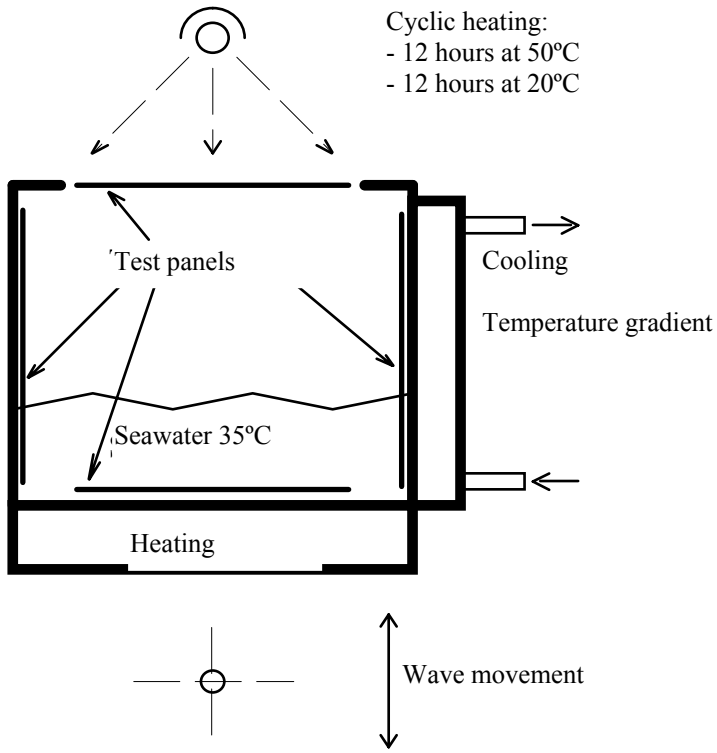

Figure 1
Wave tank for testing of ballast tank coatings

2 Test results

2.1 Prior to the testing, the following measured data of the coating system shall be reported:

.1 infrared (IR) identification of the base and hardener components of the coating;

.2 specific gravity[10] of the base and hardener components of the paint; and

.3 number of pinholes, low voltage detector at 90 V.

2.2 After the testing, the following measured data shall be reported:

.1 blisters and rust;[11]

.2 dry film thickness (DFT) (use of a template);[12]

.3 adhesion value;[13]

.4 flexibility[14] modified according to panel thickness (3 mm steel, 300 μm coating, 150 mm cylindrical mandrel gives 2% elongation) for information only;

.5 cathodic protection weight loss/current demand/disbondment from artificial holiday; and

.6 undercutting from scribe. The undercutting along both sides of the scribe is measured and the maximum undercutting determined on each panel. The average of the three maximum records is used for the acceptance.

3 Acceptance criteria

3.1 The test results based on section 2 shall satisfy the following criteria:

Item	Acceptance criteria for epoxy-based systems applied according to table 1 of this Standard	Acceptance criteria for alternative systems
Blisters on panel	No blisters	No blisters
Rust on panel	Ri 0 (0%)	Ri 0 (0%)
Number of pinholes	0	0
Adhesive failure	> 3.5 MPa Adhesive failure between substrate and coating or between coats for 60% or more of the areas.	> 5 MPa Adhesive failure between substrate and coating or between coats for 60% or more of the areas.

10 Reference standard: ISO 2811-1/4:1997. Paints and varnishes. Determination of density.

11 Reference standards: ISO 4628/2:2003. Paints and varnishes – Evaluation of degradation of coatings – Designation of quantity and size of defects, and of intensity of uniform changes in appearance – Part 2. ISO 4628:2003. Paints and varnishes – Evaluation of degradation of coatings – Designation of quantity and size of common types of defect – Part 3: Designation of degree of rusting.

12 Nine equally distributed measuring points are used on panel's size 150 mm x 150 mm or 15 equally distributed measuring points on panel's size 200 mm x 400 mm.

13 Reference standard: ISO 4624:2002. Pull-off test for adhesion.

14 Reference standards: ASTM D4145:1983. Standard Test Method for Coating Flexibility of Prepainted Sheet.

Item	Acceptance criteria for epoxy-based systems applied according to table 1 of this Standard	Acceptance criteria for alternative systems
Cohesive failure	≥ 3 MPa Cohesive failure in coating for 40% or more of the area.	> 5 MPa Cohesive failure in coating for 40% or more of the area.
Cathodic protection current demand calculated from weight loss	< 5 mA/m^2	< 5 mA/m^2
Cathodic protection; disbondment from artificial holiday	< 8 mm	< 5 mm
Undercutting from scribe	< 8 mm	< 5 mm
U-bar	Any defects, cracking or detachment at the angle or weld will lead to system being failed.	Any defects, cracking or detachment at the angle or weld will lead to system being failed.

3.2 Epoxy-based systems tested prior to the date of entry into force of this Standard shall satisfy only the criteria for blistering and rust in the table above.

3.3 Epoxy-based systems tested when applied according to table 1 of this Standard shall satisfy the criteria for epoxy-based systems as indicated in the table above.

3.4 Alternative systems not necessarily epoxy-based and/or not necessarily applied according to table 1 of this Standard shall satisfy the criteria for alternative systems as indicated in the table above.

4 Test report

The test report shall include the following information:

.1 name of the manufacturer;

.2 date of tests;

.3 product name/identification of both paint and primer;

.4 batch number;

.5 data of surface preparation on steel panels, including the following:

.5.1 surface treatment;
.5.2 water soluble salts limit;
.5.3 dust; and
.5.4 abrasive inclusions;

.6 application data of coating system, including the following:

.6.1 shop primed;
.6.2 number of coats;
.6.3 recoat interval;[15]
.6.4 dry film thickness (DFT) prior to testing;[15]
.6.5 thinner;[15]
.6.6 humidity;[15]
.6.7 air temperature;[15] and
.6.8 steel temperature;

.7 test results according to section 2; and

.8 judgment according to section 3.

[15] Both of actual specimen data and manufacturer's requirement/recommendation.

APPENDIX 2

CONDENSATION CHAMBER TEST

1 Test condition

Condensation chamber test shall be conducted in accordance with applicable standards.[16]

.1 The exposure time is 180 days.

.2 There are to be 2 test panels.

.3 The size of each test panel is 150 mm x 150 mm x 3 mm. The panels are to be treated according to the Performance Standard, table 1, paragraphs 1, 2 and 3 and coating system applied according to table 1, paragraphs 1.4 and 1.5. Shop primer to be weathered for at least 2 months and cleaned by low pressure washing or other mild method. Blast sweep or high pressure washing, or other primer removal methods not to be used. Weathering method and extent shall take into consideration that the primer is to be the foundation for a 15 year target life system. To facilitate innovation, alternative preparation, coating systems and dry film thicknesses may be used when clearly defined.

.4 The reverse side of the test piece shall be painted appropriately, in order not to affect the test results.

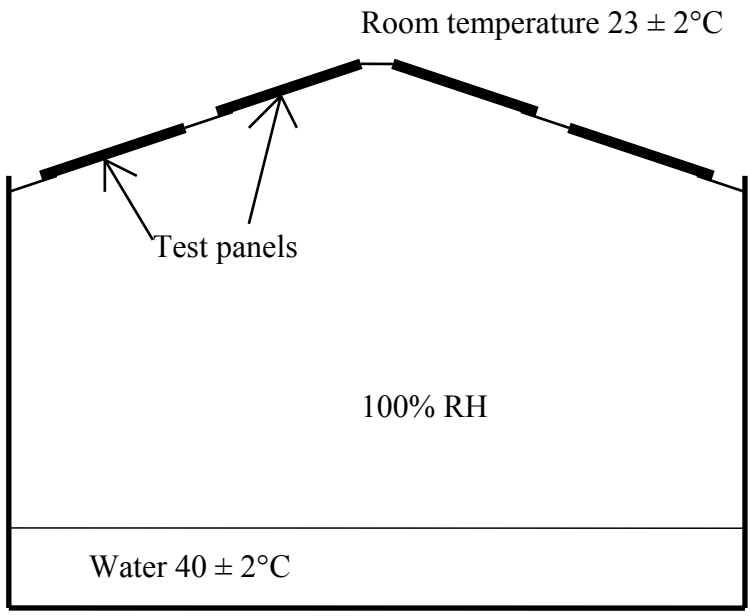

Figure 2
Condensation chamber

[16] Reference standard: ISO 6270-1:1998 Paints and varnishes – Determination of resistance to humidity – Part 1: Continuous condensation.

2 Test results

According to section 2 (except for 2.2.5 and 2.2.6) of appendix 1.

3 Acceptance criteria

3.1 The test results based on section 2 shall satisfy the following criteria:

Item	Acceptance criteria for epoxy-based systems applied according to table 1 of this Standard	Acceptance criteria for alternative systems
Blisters on panel	No blisters	No blisters
Rust on panel	Ri 0 (0%)	Ri 0 (0%)
Number of pinholes	0	0
Adhesive failure	> 3.5 MPa Adhesive failure between substrate and coating or between coats for 60% or more of the areas.	> 5 MPa Adhesive failure between substrate and coating or between coats for 60% or more of the areas.
Cohesive failure	> 3 MPa Cohesive failure in coating for 40% or more of the area.	> 5 MPa Cohesive failure in coating for 40% or more of the area.

3.2 Epoxy-based systems tested prior to the date of entry into force of this Standard shall satisfy only the criteria for blistering and rust in the table above.

3.3 Epoxy-based systems tested when applied according to table 1 of this Standard shall satisfy the criteria for epoxy-based systems as indicated in the table above.

3.4 Alternative systems not necessarily epoxy-based and/or not necessarily applied according to table 1 of this Standard shall satisfy the criteria for alternative systems as indicated in the table above.

4 Test report

According to section 4 of appendix 1.

ANNEX 2

EXAMPLE OF DAILY LOG AND NON-CONFORMITY REPORT

DAILY LOG **Sheet No:**

Ship:	**Tank/Hold No:**	**Database:**
Part of structure:		
SURFACE PREPARATION		
Method:	**Area (m^2):**	
Abrasive:	**Grain size:**	
Surface temperature:	**Air temperature:**	
Relative humidity (max):	**Dew point:**	
Standard achieved:		
Rounding of edges:		
Comments:		
Job No.:	**Date:**	**Signature:**

COATING APPLICATION:

Method:

Coat No.	System	Batch No.	Date	Air temp.	Surf temp.	RH%	Dew point	DFT* Meas.*	Specified

* **Measured minimum and maximum DFT. DFT readings to be attached to daily log**

Comments:

Job No:	**Date:**	**Signature:**

NON-CONFORMITY REPORT **Sheet No:**

Ship:	**Tank/Hold No:**	**Database:**
Part of structure:		
DESCRIPTION OF THE INSPECTION FINDINGS TO BE CORRECTED		
Description of findings:		
Reference document (daily log):		
Action taken:		
Job No.:	**Date:**	**Signature:**

ANNEX 3

DRY FILM THICKNESS MEASUREMENTS

1 The following verification check points of DFT are to be taken:

.1 one gauge reading per 5 m^2 of flat surface areas;

.2 one gauge reading at 2 to 3 m intervals and as close as possible to tank boundaries, but not further than 15 mm from edges of tank boundaries;

.3 longitudinal and transverse stiffener members:

One set of gauge readings as shown below, taken at 2 to 3 m run and not less than two sets between primary support members;

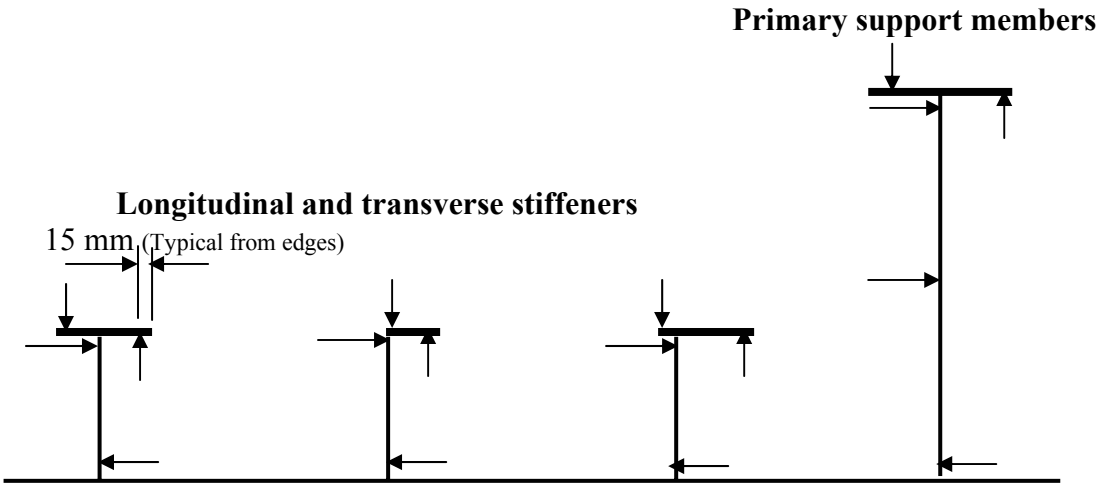

Figure 3

Note: Arrows of diagram indicate critical areas and should be understood to mean indication for both sides.

.4 3 gauge readings for each set of primary support members and 2 gauge readings for each set of other members as indicated by the arrows in the diagram;

.5 for primary support members (girders and transverses) one set of gauge readings for 2 to 3 m run as shown in figure 3 above but not less than three sets;

.6 around openings one gauge reading from each side of the opening;

.7 five gauge readings per square metre (m^2) but not less than three gauge readings taken at complex areas (i.e., large brackets of primary support members); and

.8 additional spot checks are to be taken to verify coating thickness for any area considered necessary by the coating inspector.

***

ANNEX 2

RESOLUTION MSC.216(82)

(adopted on 8 December 2006)

ADOPTION OF AMENDMENTS TO THE INTERNATIONAL CONVENTION FOR THE SAFETY OF LIFE AT SEA, 1974, AS AMENDED

THE MARITIME SAFETY COMMITTEE,

RECALLING Article 28(b) of the Convention on the International Maritime Organization concerning the functions of the Committee,

RECALLING FURTHER article VIII(b) of the International Convention for the Safety of Life at Sea (SOLAS), 1974 (hereinafter referred to as "the Convention"), concerning the amendment procedure applicable to the Annex to the Convention, other than to the provisions of chapter I thereof,

HAVING CONSIDERED, at its eighty-second session, amendments to the Convention, proposed and circulated in accordance with article VIII(b)(i) thereof,

1. ADOPTS, in accordance with article VIII(b)(iv) of the Convention, amendments to the Convention, the text of which is set out in Annexes 1, 2 and 3 to the present resolution;

2. DETERMINES, in accordance with article VIII(b)(vi)(2)(bb) of the Convention, that:

(a) the said amendments, set out in Annex 1, shall be deemed to have been accepted on 1 January 2008;

(b) the said amendments, set out in Annex 2, shall be deemed to have been accepted on 1 July 2008; and

(c) the said amendments, set out in Annex 3, shall be deemed to have been accepted on 1 January 2010,

unless, prior to those dates, more than one third of the Contracting Governments to the Convention or Contracting Governments the combined merchant fleets of which constitute not less than 50% of the gross tonnage of the world's merchant fleet, have notified their objections to the amendments;

3. INVITES SOLAS Contracting Governments to note that, in accordance with article VIII(b)(vii)(2) of the Convention:

(a) the amendments, set out in Annex 1, shall enter into force on 1 July 2008;

(b) the amendments, set out in Annex 2, shall enter into force on 1 January 2009; and

(c) the amendments, set out in Annex 3, shall enter into force on 1 July 2010,

upon their acceptance in accordance with paragraph 2 above;

4. REQUESTS the Secretary-General, in conformity with article VIII(b)(v) of the Convention, to transmit certified copies of the present resolution and the text of the amendments contained in Annexes 1, 2 and 3 to all Contracting Governments to the Convention;

5. FURTHER REQUESTS the Secretary-General to transmit copies of this resolution and its Annexes 1, 2 and 3 to Members of the Organization, which are not Contracting Governments to the Convention.

ANNEX 1

AMENDMENTS TO THE INTERNATIONAL CONVENTION FOR THE SAFETY OF LIFE AT SEA, 1974, AS AMENDED

CHAPTER II-1
CONSTRUCTION – STRUCTURE, SUBDIVISION AND STABILITY, MACHINERY AND ELECTRICAL INSTALLATIONS

PART A-1
STRUCTURE OF SHIPS

Regulation 3-2 – Corrosion prevention of seawater ballast tanks in oil tankers and bulk carriers

1 The existing text and the heading of regulation 3-2 are replaced by the following:

"**Protective coatings of dedicated seawater ballast tanks in all types of ships and double-side skin spaces of bulk carriers**

1 Paragraphs 2 and 4 of this regulation shall apply to ships of not less than 500 gross tonnage:

.1 for which the building contract is placed on or after 1 July 2008; or

.2 in the absence of a building contract, the keels of which are laid or which are at a similar stage of construction on or after 1 January 2009; or

.3 the delivery of which is on or after 1 July 2012.

2 All dedicated seawater ballast tanks arranged in ships and double-side skin spaces arranged in bulk carriers of 150 m in length and upwards shall be coated during construction in accordance with the Performance standard for protective coatings for dedicated seawater ballast tanks in all types of ships and double-side skin spaces of bulk carriers, adopted by the Maritime Safety Committee by resolution MSC.215(82), as may be amended by the Organization, provided that such amendments are adopted, brought into force and take effect in accordance with the provisions of article VIII of the present Convention concerning the amendment procedures applicable to the Annex other than chapter I.

3 All dedicated seawater ballast tanks arranged in oil tankers and bulk carriers constructed on or after 1 July 1998, for which paragraph 2 is not applicable, shall comply with the requirements of regulation II-1/3-2 adopted by resolution MSC.47(66).

4 Maintenance of the protective coating system shall be included in the overall ship's maintenance scheme. The effectiveness of the protective coating system shall be verified during the life of a ship by the Administration or an organization recognized by the Administration, based on the guidelines developed by the Organization.[*]"

[*] Refer to the guidelines to be developed by the Organization.

CHAPTER II-2
CONSTRUCTION – FIRE PROTECTION, FIRE DETECTION AND FIRE EXTINCTION

Regulation 1 – Application

2 In paragraph 2.2.3, the second occurrence of the word "and" is deleted.

3 In paragraph 2.2.4, "." is replaced by "; and".

4 In paragraph 2.2, the following new subparagraph .5 is added after the existing subparagraph .4:

".5 regulations 5.3.1.3.2 and 5.3.4 to passenger ships not later than the date of the first survey after 1 July 2008."

Regulation 3 – Definitions

5 The following new paragraph 53 is added after the existing paragraph 52:

"53 *Cabin balcony* is an open deck space which is provided for the exclusive use of the occupants of a single cabin and has direct access from such a cabin."

Regulation 4 – Probability of ignition

6 The following text is added at the end of paragraph 5.2.3:

"except that "A-0" class standard is acceptable for windows and sidescuttles outside the limit specified in regulation 9.2.4.2.5."

7 In paragraph 4.4, the words "or if applied on cabin balconies of passenger ships constructed on or after 1 July 2008," are added between the words "stations" and "shall".

Regulation 5 – Fire growth potential

8 In paragraph 3.1.2.1, the last sentence is deleted.

9 The following new paragraph 3.1.3 is inserted:

"3.1.3 *Partial bulkheads and decks on passenger ships*

3.1.3.1 Partial bulkheads or decks used to subdivide a space for utility or artistic treatment shall be of non-combustible materials.

3.1.3.2 Linings, ceilings and partial bulkheads or decks used to screen or to separate adjacent cabin balconies shall be of non-combustible materials. Cabin balconies on passenger ships constructed before 1 July 2008 shall comply with the requirements of this paragraph by the first survey after 1 July 2008."

10 In the first sentence of paragraph 3.2.1.1, the words "and cabin balconies" are added between the words "spaces" and "which", and the following new sentence is added at the end of the paragraph:

"However, the provisions of paragraph 3.2.3 need not be applied to cabin balconies."

11 The following new subparagraph .3 is added to the existing paragraph 3.2.4.1:

".3 exposed surfaces of cabin balconies, except for natural hard wood decking systems."

12 The following new paragraph 3.4 is added after the existing paragraph 3.3:

"3.4 *Furniture and furnishings on cabin balconies of passenger ships*

On passenger ships, furniture and furnishings on cabin balconies shall comply with regulations 3.40.1, 3.40.2, 3.40.3, 3.40.6 and 3.40.7 unless such balconies are protected by a fixed pressure water-spraying and fixed fire detection and fire alarm systems complying with regulations 7.10 and 10.6.1.3. Passenger ships constructed before 1 July 2008 shall comply with the requirements of this paragraph by the first survey after 1 July 2008."

Regulation 6 – Smoke generation potential and toxicity

13 The existing paragraph 2 is renumbered as paragraph 2.1.

14 The following new paragraph 2.2 is added after the renumbered paragraph 2.1:

"2.2 On passenger ships constructed on or after 1 July 2008, paints, varnishes and other finishes used on exposed surfaces of cabin balconies, excluding natural hard wood decking systems, shall not be capable of producing excessive quantities of smoke and toxic products, this being determined in accordance with the Fire Test Procedures Code."

15 The existing paragraph 3 is renumbered as paragraph 3.1.

16 The following new paragraph 3.2 is added after the renumbered paragraph 3.1:

"3.2 On passenger ships constructed on or after 1 July 2008, primary deck coverings on cabin balconies shall not give rise to smoke, toxic or explosive hazards at elevated temperatures, this being determined in accordance with the Fire Test Procedures Code."

Regulation 7 – Detection and alarm

17 The following new paragraph 10 is added after the existing paragraph 9.4:

"**10 Protection of cabin balconies on passenger ships**

A fixed fire detection and fire alarm system complying with the provisions of the Fire Safety Systems Code shall be installed on cabin balconies of ships to which regulation 5.3.4 applies, when furniture and furnishings on such balconies are not as defined in regulations 3.40.1, 3.40.2, 3.40.3, 3.40.6 and 3.40.7."

Regulation 9 – Containment of fire

18 The following new paragraph 2.2.6 is added after the existing paragraph 2.2.5.2:

"2.2.6 *Arrangement of cabin balconies*

On passenger ships constructed on or after 1 July 2008, non-load bearing partial bulkheads which separate adjacent cabin balconies shall be capable of being opened by the crew from each side for the purpose of fighting fires."

Regulation 10 – Fire fighting

19 The heading of paragraph 6.1 is replaced by the following:

"6.1 *Sprinkler and water spray systems in passenger ships"*

20 The following new paragraph 6.1.3 is added after the existing paragraph 6.1.2:

"6.1.3 A fixed pressure water-spraying fire-extinguishing system complying with the provisions of the Fire Safety Systems Code shall be installed on cabin balconies of ships to which regulation 5.3.4 applies, where furniture and furnishings on such balconies are not as defined in regulations 3.40.1, 3.40.2, 3.40.3, 3.40.6 and 3.40.7."

CHAPTER III
LIFE-SAVING APPLIANCES AND ARRANGEMENTS

Regulation 6 – Communications

21 Paragraph 4.3 is replaced by the following:

"4.3 The general emergency alarm system shall be audible throughout all the accommodation and normal crew working spaces. On passenger ships, the system shall also be audible on all open decks."

Regulation 11 – Survival craft muster and embarkation arrangements

22 In the first sentence of paragraph 7, the word "unfavourable" is replaced by the word "all" and the unit "°" is inserted after the terms "10" and "20".

Regulation 14 – Stowage of rescue boats

23 The words ", and if the inflated type, in a fully inflated condition at all times" are added at the end of subparagraph .1.

Regulation 19 – Emergency training and drills

24 Paragraph 3.3.4 is replaced by the following:

"3.3.4 In the case of a lifeboat arranged for free-fall launching, at least once every three months during an abandon ship drill the crew shall board the lifeboat, properly secure

themselves in their seats and commence launch procedures up to but not including the actual release of the lifeboat (i.e., the release hook shall not be released). The lifeboat shall then either be free-fall launched with only the required operating crew on board, or lowered into the water by means of the secondary means of launching with or without the operating crew on board. In both cases the lifeboat shall thereafter be manoeuvred in the water by the operating crew. At intervals of not more than six months, the lifeboat shall either be launched by free-fall with only the operating crew on board, or simulated launching shall be carried out in accordance with the guidelines developed by the Organization*."

* Refer to Measures to prevent accidents with lifeboats (MSC.1/Circ.1206).

Regulation 20 – Operational readiness, maintenance and inspections

25 Paragraphs 4.1 and 4.2 are replaced by the following:

"Falls used in launching shall be inspected periodically* with special regard for areas passing through sheaves, and renewed when necessary due to deterioration of the falls or at intervals of not more than 5 years, whichever is the earlier."

* Refer to Measures to prevent accidents with lifeboats (MSC.1/Circ.1206).

26 In the third sentence of paragraph 6.2, the words "it should be run for such period as prescribed in the manufacturer's handbook" are replaced by the words "a suitable water supply may be provided".

27 The heading of paragraph 8 is replaced by the following:

"8 Servicing of inflatable liferafts, inflatable lifejackets, marine evacuation systems and maintenance and repair of inflated rescue boats"

28 The second sentence of paragraph 11.1.3 is replaced by the following:

"The load to be applied shall be the mass of the survival craft or rescue boat without persons on board, except that, at intervals not exceeding five years, the test shall be carried out with a proof load equal to 1.1 times the weight of the survival craft or rescue boat and its full complement of persons and equipment."

29 The chapeau of paragraph 11.2 is replaced by the following:

"11.2 Lifeboat or rescue boat on-load release gear, including free-fall lifeboat release systems, shall be:"

30 In the first sentence of paragraph 11.2.3, the word "lifeboat" is replaced by the word "boat".

31 The following new paragraph 11.3 is added to the regulation:

"11.3 Davit-launched liferaft automatic release hooks shall be:

.1 maintained in accordance with instructions for on-board maintenance as required by regulation 36;

.2 subject to a thorough examination and operational test during the annual surveys required by regulations I/7 and I/8 by properly trained personnel familiar with the system; and

.3 operationally tested under a load of 1.1 times the total mass of the liferaft when loaded with its full complement of persons and equipment whenever the automatic release hook is overhauled. Such over-hauling and test shall be carried out at least once every five years.[*]"

[*] Refer to the Recommendation on testing of life-saving appliances, as adopted by the Organization by resolution A.689(17). For life-saving appliances installed on board on or after 1 July 1999, refer to the Revised Recommendations on testing of life-saving appliances, as adopted by the Maritime Safety Committee of the Organization by resolution MSC.81(70).

Regulation 21 – Survival craft and rescue boats

32 The chapeau of paragraph 1.2 is replaced by the following:

"1.2 Passenger ships engaged on short international voyages shall carry:"

33 Paragraph 1.3 is deleted and the remaining paragraphs are renumbered accordingly.

34 In paragraph 1.4, the words "after all persons have been assembled, with lifejackets donned" are added at the end of the paragraph.

35 Paragraph 2.3 is replaced by the following:

"2.3 A lifeboat may be accepted as a rescue boat provided that it and its launching and recovery arrangements also comply with the requirements for a rescue boat."

36 In paragraph 3.2, the words "and complying with the special standards of subdivision prescribed by regulation II-1/6.5" are deleted.

Regulation 26 – Additional requirements for ro-ro passenger ships

37 In paragraph 3.1, the words "approved by the Administration having regard for the recommendations approved by the Organization" are replaced by the words "complying with section 5.1.4 of the Code".

38 In paragraph 3.2, all the words after the word "appliance" are replaced by the words "complying with section 6.1.7 of the Code".

Regulation 31 – Survival craft and rescue boats

39 Subparagraph .2 of paragraph 1.1 is replaced by the following:

".2 in addition, one or more inflatable or rigid liferafts, complying with the requirements of section 4.2 or 4.3 of the Code, of a mass of less than 185 kg and stowed in a position providing for easy side-to-side transfer at a single open deck level, and of such aggregate capacity as will accommodate the total number of persons on board. If the liferaft or liferafts are not of a mass of less than 185 kg and stowed in a position providing for easy side-to-side transfer at a single open deck level, the total capacity available on each side shall be sufficient to accommodate the total number of persons on board."

40 Subparagraph .2 of paragraph 1.3 is replaced by the following:

".2 unless the liferafts required by paragraph 1.3.1 are of a mass of less than 185 kg and stowed in a position providing for easy side-to-side transfer at a single open deck level, additional liferafts shall be provided so that the total capacity available on each side will accommodate 150% of the total number of persons on board;"

41 Subparagraph .4 of paragraph 1.3 is replaced by the following:

".4 in the event of any one survival craft being lost or rendered unserviceable, there shall be sufficient survival craft available for use on each side, including any which are of a mass of less than 185 kg and stowed in a position providing for easy side-to-side transfer at a single open deck level, to accommodate the total number of persons on board."

42 The second sentence of paragraph 2 is replaced by the following:

"A lifeboat may be accepted as a rescue boat, provided that it and its launching and recovery arrangements also comply with the requirements for a rescue boat."

Regulation 32 – Personal life-saving appliances

43 In the first sentence of paragraph 3.2, the words "of an appropriate size," are inserted between the words "suits" and "complying".

44 In paragraph 3.3, the words "including remotely located survival craft carried in accordance with regulation 31.1.4", are inserted between the words "stowed," and "additional" and the words "of an appropriate size" are inserted between the words "suits" and "shall".

Regulation 35 – Training manual and on-board training aids

45 The following new paragraph 5 is added after the existing paragraph 4:

"5 The training manual shall be written in the working language of the ship."

CHAPTER XII
ADDITIONAL SAFETY MEASURES FOR BULK CARRIERS

Regulation 6 – Structural and other requirements for bulk carriers

46 The existing paragraph 3 is deleted and the existing paragraphs 4 and 5 are renumbered as paragraphs 3 and 4.

Regulation 12 – Hold, ballast and dry space water ingress alarms

47 In paragraph 1.2, the reference to "regulation II-1/11" is replaced by the reference to "regulation II-1/12".

Regulation 13 – Availability of pumping systems

48 In paragraph 1, the reference to "regulation II-1/11.4" is replaced by the reference to "regulation II-1/12".

APPENDIX
CERTIFICATES

49 In the Passenger Ship Safety Certificate, Cargo Ship Safety Construction Certificate and Cargo Ship Safety Certificate, the phrase "Date on which keel was laid or ship was at a similar stage of construction or, where applicable, date on which work for a conversion or an alteration or modification of a major character was commenced ....." is replaced by the following:

"Date of build:

- Date of building contract .....
- Date on which keel was laid or ship was at similar stage of construction .....
- Date of delivery .....
- Date on which work for a conversion or an alteration or modification of a major character was commenced (where applicable) .....

All applicable dates shall be completed."

Record of Equipment for the Passenger Ship Safety Certificate (Form P)

50 In the Record of Equipment for the Passenger Ship Safety Certificate (Form P), the following new item 4.2 is inserted in section 5 after item 4:

"4.2 Long-range identification and tracking system",

and item 4 (Automatic identification system (AIS)) is renumbered as item 4.1.

Record of Equipment for the Cargo Ship Safety Equipment Certificate (Form E)

51 In the Record of Equipment for the Cargo Ship Safety Equipment Certificate (Form E), the following new item 4.2 is inserted in section 3 after item 4:

"4.2 Long-range identification and tracking system",

and item 4 (Automatic identification system (AIS)) is renumbered as item 4.1.

Record of Equipment for the Cargo Ship Safety Certificate (Form C)

52 In the Record of Equipment for the Cargo Ship Safety Certificate (Form C), the following new item 4.2 is inserted in section 5 after item 4:

"4.2 Long-range identification and tracking system",

and item 4 (Automatic identification system (AIS)) is renumbered as item 4.1.

Form of Safety Certificate for Nuclear Passenger Ships

53 In the table of paragraph 2.1.3, in the section commencing with the words "THIS IS TO CERTIFY:", the reference to "regulation II-1/13" is replaced by the reference to "regulation II-1/18".

ANNEX 2

AMENDMENTS TO THE INTERNATIONAL CONVENTION FOR THE SAFETY OF LIFE AT SEA, 1974, AS AMENDED

CHAPTER II-1
CONSTRUCTION – STRUCTURE, SUBDIVISION AND STABILITY, MACHINERY AND ELECTRICAL INSTALLATIONS

1 The existing text of parts A, B and B-1 of the chapter is replaced by the following:

"PART A
GENERAL

Regulation 1
Application

1.1 Unless expressly provided otherwise, this chapter shall apply to ships the keels of which are laid or which are at a similar stage of construction on or after 1 January 2009.

1.2 For the purpose of this chapter, the term *a similar stage of construction* means the stage at which:

.1 construction identifiable with a specific ship begins; and

.2 assembly of that ship has commenced comprising at least 50 tonnes or one per cent of the estimated mass of all structural material, whichever is less.

1.3 For the purpose of this chapter:

.1 the expression *ships constructed* means ships the keels of which are laid or which are at a similar stage of construction;

.2 the expression *all ships* means ships constructed before, on or after 1 January 2009;

.3 a cargo ship, whenever built, which is converted to a passenger ship shall be treated as a passenger ship constructed on the date on which such a conversion commences;

.4 the expression *alterations and modifications of a major character* means, in the context of cargo ship subdivision and stability, any modification to the construction which affects the level of subdivision of that ship. Where a cargo ship is subject to such modification, it shall be demonstrated that the A/R ratio calculated for the ship after such modifications is not less than the A/R ratio calculated for the ship before the modification. However, in those cases where the ship's A/R ratio before modification is equal to or greater than unity, it is only necessary that the ship after modification has an A value which is not less than R, calculated for the modified ship.

2 Unless expressly provided otherwise, for ships constructed before 1 January 2009, the Administration shall ensure that the requirements which are applicable under chapter II-1 of the International Convention for the Safety of Life at Sea, 1974, as amended by resolutions MSC.1(XLV), MSC.6(48), MSC.11(55), MSC.12(56), MSC.13(57), MSC.19(58), MSC.26(60), MSC.27(61), Resolution 1 of the 1995 SOLAS Conference, MSC.47(66), MSC.57(67), MSC.65(68), MSC.69(69), MSC.99(73), MSC.134(76), MSC.151(78) and MSC.170(79) are complied with.

3 All ships which undergo repairs, alterations, modifications and outfitting related thereto shall continue to comply with at least the requirements previously applicable to these ships. Such ships, if constructed before the date on which any relevant amendments enter into force, shall, as a rule, comply with the requirements for ships constructed on or after that date to at least the same extent as they did before undergoing such repairs, alterations, modifications or outfitting. Repairs, alterations and modifications of a major character and outfitting related thereto shall meet the requirements for ships constructed on or after the date on which any relevant amendments enter into force, in so far as the Administration deems reasonable and practicable.

4 The Administration of a State may, if it considers that the sheltered nature and conditions of the voyage are such as to render the application of any specific requirements of this chapter unreasonable or unnecessary, exempt from those requirements individual ships or classes of ships entitled to fly the flag of that State which, in the course of their voyage, do not proceed more than 20 miles from the nearest land.

5 In the case of passenger ships which are employed in special trades for the carriage of large numbers of special trade passengers, such as the pilgrim trade, the Administration of the State whose flag such ships are entitled to fly, if satisfied that it is impracticable to enforce compliance with the requirements of this chapter, may exempt such ships from those requirements, provided that they comply fully with the provisions of:

.1 the rules annexed to the Special Trade Passenger Ships Agreement, 1971; and

.2 the rules annexed to the Protocol on Space Requirements for Special Trade Passenger Ships, 1973.

Regulation 2
Definitions

For the purpose of this chapter, unless expressly provided otherwise:

1 *Subdivision length (L_s)* of the ship is the greatest projected moulded length of that part of the ship at or below deck or decks limiting the vertical extent of flooding with the ship at the deepest subdivision draught.

2 *Mid-length* is the mid-point of the subdivision length of the ship.

3 *Aft terminal* is the aft limit of the subdivision length.

4 *Forward terminal* is the forward limit of the subdivision length.

5 *Length (L)* is the length as defined in the International Convention on Load Lines in force.

6 *Freeboard deck* is the deck as defined in the International Convention on Load Lines in force.

7 *Forward perpendicular* is the forward perpendicular as defined in the International Convention on Load Lines in force.

8 *Breadth (B)* is the greatest moulded breadth of the ship at or below the deepest subdivision draught.

9 *Draught (d)* is the vertical distance from the keel line at mid-length to the waterline in question.

10 *Deepest subdivision draught (d_s)* is the waterline which corresponds to the summer load line draught of the ship.

11 *Light service draught (d_l)* is the service draught corresponding to the lightest anticipated loading and associated tankage, including, however, such ballast as may be necessary for stability and/or immersion. Passenger ships should include the full complement of passengers and crew on board.

12 *Partial subdivision draught (d_p)* is the light service draught plus 60% of the difference between the light service draught and the deepest subdivision draught.

13 *Trim* is the difference between the draught forward and the draught aft, where the draughts are measured at the forward and aft terminals respectively, disregarding any rake of keel.

14 *Permeability (μ)* of a space is the proportion of the immersed volume of that space which can be occupied by water.

15 *Machinery spaces* are spaces between the watertight boundaries of a space containing the main and auxiliary propulsion machinery, including boilers, generators and electric motors primarily intended for propulsion. In the case of unusual arrangements, the Administration may define the limits of the machinery spaces.

16 *Weathertight* means that in any sea conditions water will not penetrate into the ship.

17 *Watertight* means having scantlings and arrangements capable of preventing the passage of water in any direction under the head of water likely to occur in intact and damaged conditions. In the damaged condition, the head of water is to be considered in the worst situation at equilibrium, including intermediate stages of flooding.

18 *Design pressure* means the hydrostatic pressure for which each structure or appliance assumed watertight in the intact and damage stability calculations is designed to withstand.

19 *Bulkhead deck* in a passenger ship means the uppermost deck at any point in the subdivision length (L_s) to which the main bulkheads and the ship's shell are carried watertight and the lowermost deck from which passenger and crew evacuation will not be impeded by water in any stage of flooding for damage cases defined in regulation 8 and in part B-2 of this chapter. The bulkhead deck may be a stepped deck. In a cargo ship the freeboard deck may be taken as the bulkhead deck.

20 *Deadweight* is the difference in tonnes between the displacement of a ship in water of a specific gravity of 1.025 at the draught corresponding to the assigned summer freeboard and the lightweight of the ship.

21 *Lightweight* is the displacement of a ship in tonnes without cargo, fuel, lubricating oil, ballast water, fresh water and feedwater in tanks, consumable stores, and passengers and crew and their effects.

22 *Oil tanker* is the oil tanker defined in regulation 1 of Annex I of the Protocol of 1978 relating to the International Convention for the Prevention of Pollution from Ships, 1973.

23 *Ro-ro passenger ship* means a passenger ship with ro-ro spaces or special category spaces as defined in regulation II-2/3.

24 *Bulk carrier* means a bulk carrier as defined in regulation XII/1.1.

25 *Keel line* is a line parallel to the slope of the keel passing amidships through:

.1 the top of the keel at centreline or line of intersection of the inside of shell plating with the keel if a bar keel extends below that line, on a ship with a metal shell; or

.2 in wood and composite ships, the distance is measured from the lower edge of the keel rabbet. When the form at the lower part of the midship section is of a hollow character, or where thick garboards are fitted, the distance is measured from the point where the line of the flat of the bottom continued inward intersects the centreline amidships.

26 *Amidship* is at the middle of the length (L).

Regulation 3
Definitions relating to parts C, D and E

For the purpose of parts C, D and E, unless expressly provided otherwise:

1 *Steering gear control system* is the equipment by which orders are transmitted from the navigating bridge to the steering gear power units. Steering gear control systems comprise transmitters, receivers, hydraulic control pumps and their associated motors, motor controllers, piping and cables.

2 *Main steering gear* is the machinery, rudder actuators, steering gear, power units, if any, and ancillary equipment and the means of applying torque to the rudder stock (e.g. tiller or quadrant) necessary for effecting movement of the rudder for the purpose of steering the ship under normal service conditions.

3 *Steering gear power unit* is:

.1 in the case of electric steering gear, an electric motor and its associated electrical equipment;

.2 in the case of electrohydraulic steering gear, an electric motor and its associated electrical equipment and connected pump; or

.3 in the case of other hydraulic steering gear, a driving engine and connected pump.

4 *Auxiliary steering gear* is the equipment other than any part of the main steering gear necessary to steer the ship in the event of failure of the main steering gear but not including the tiller, quadrant or components serving the same purpose.

5 *Normal operational and habitable condition* is a condition under which the ship as a whole, the machinery, services, means and aids ensuring propulsion, ability to steer, safe navigation, fire and flooding safety, internal and external communications and signals, means of escape, and emergency boat winches, as well as the designed comfortable conditions of habitability are in working order and functioning normally.

6 *Emergency condition* is a condition under which any services needed for normal operational and habitable conditions are not in working order due to failure of the main source of electrical power.

7 *Main source of electrical power* is a source intended to supply electrical power to the main switchboard for distribution to all services necessary for maintaining the ship in normal operational and habitable conditions.

8 *Dead ship condition* is the condition under which the main propulsion plant, boilers and auxiliaries are not in operation due to the absence of power.

9 *Main generating station* is the space in which the main source of electrical power is situated.

10 *Main switchboard* is a switchboard which is directly supplied by the main source of electrical power and is intended to distribute electrical energy to the ship's services.

11 *Emergency switchboard* is a switchboard which in the event of failure of the main electrical power supply system is directly supplied by the emergency source of electrical power or the transitional source of emergency power and is intended to distribute electrical energy to the emergency services.

12 *Emergency source of electrical power* is a source of electrical power, intended to supply the emergency switchboard in the event of a failure of the supply from the main source of electrical power.

13 *Power actuating system* is the hydraulic equipment provided for supplying power to turn the rudder stock, comprising a steering gear power unit or units, together with the associated pipes and fittings, and a rudder actuator. The power actuating systems may share common mechanical components (i.e. tiller, quadrant and rudder stock) or components serving the same purpose.

14 *Maximum ahead service speed* is the greatest speed which the ship is designed to maintain in service at sea at the deepest sea-going draught.

15 *Maximum astern speed* is the speed which it is estimated the ship can attain at the designed maximum astern power at the deepest sea-going draught.

16 *Machinery spaces* are all machinery spaces of category A and all other spaces containing propelling machinery, boilers, oil fuel units, steam and internal combustion engines, generators and major electrical machinery, oil filling stations, refrigerating, stabilizing, ventilation and air conditioning machinery, and similar spaces, and trunks to such spaces.

17 *Machinery spaces of category A* are those spaces and trunks to such spaces which contain:

.1 internal combustion machinery used for main propulsion;

.2 internal combustion machinery used for purposes other than main propulsion where such machinery has in the aggregate a total power output of not less than 375 kW; or

.3 any oil-fired boiler or oil fuel unit.

18 *Control stations* are those spaces in which the ship's radio or main navigating equipment or the emergency source of power is located or where the fire recording or fire control equipment is centralized.

19 *Chemical tanker* is a cargo ship constructed or adapted and used for the carriage in bulk of any liquid product listed in either:

.1 chapter 17 of the International Code for the Construction and Equipment of Ships Carrying Dangerous Chemicals in Bulk adopted by the Maritime Safety Committee by resolution MSC.4(48), hereinafter referred to as "the International Bulk Chemical Code", as may be amended by the Organization; or

.2 chapter VI of the Code for the Construction and Equipment of Ships Carrying Dangerous Chemicals in Bulk adopted by the Assembly of the Organization by resolution A.212(VII), hereinafter referred to as "the Bulk Chemical Code", as has been or may be amended by the Organization,

whichever is applicable.

20 *Gas carrier* is a cargo ship constructed or adapted and used for the carriage in bulk of any liquefied gas or other products listed in either:

.1 chapter 19 of the International Code for the Construction and Equipment of Ships Carrying Liquefied Gases in Bulk adopted by the Maritime Safety Committee by resolution MSC.5(48), hereinafter referred to as "the International Gas Carrier Code", as may be amended by the Organization; or

.2 chapter XIX of the Code for the Construction and Equipment of Ships Carrying Liquefied Gases in Bulk adopted by the Organization by resolution A.328(IX), hereinafter referred to as "the Gas Carrier Code", as has been or may be amended by the Organization,

whichever is applicable.

PART B
SUBDIVISION AND STABILITY

Regulation 4
General

1 The damage stability requirements in parts B-1 through B-4 shall apply to cargo ships of 80 m in length (*L*) and upwards and to all passenger ships regardless of length but shall exclude those cargo ships which are shown to comply with subdivision and damage stability regulations in other instruments* developed by the Organization.

2 The Administration may, for a particular ship or group of ships, accept alternative methodologies if it is satisfied that at least the same degree of safety as represented by these regulations is achieved. Any Administration which allows such alternative methodologies shall communicate to the Organization particulars thereof.

---

* Cargo ships shown to comply with the following regulations may be excluded from the application of part B-1:

.1 Annex I to MARPOL 73/78, except OBO ships with type B freeboards are not excluded;
.2 International Bulk Chemical Code;
.3 International Gas Carrier Code;
.4 Guidelines for the design and construction of offshore supply vessels (resolution A.469(XII));
.5 Code of Safety for Special Purpose Ships (resolution A.534(13), as amended);
.6 Damage stability requirements of regulation 27 of the 1966 Load Lines Convention as applied in compliance with resolutions A.320(IX) and A.514(13), provided that in the case of cargo ships to which regulation 27(9) applies, main transverse watertight bulkheads, to be considered effective, are spaced according to paragraph (12)(f) of resolution A.320(IX), except ships intended for the carriage of deck cargo; and
.7 Damage stability requirements of regulation 27 of the 1988 Load Lines Protocol, except ships intended for the carriage of deck cargo.

3 Ships shall be as efficiently subdivided as is possible having regard to the nature of the service for which they are intended. The degree of subdivision shall vary with the subdivision length (L_s) of the ship and with the service, in such manner that the highest degree of subdivision corresponds with the ships of greatest subdivision length (L_s), primarily engaged in the carriage of passengers.

4 Where it is proposed to fit decks, inner skins or longitudinal bulkheads of sufficient tightness to seriously restrict the flow of water, the Administration shall be satisfied that proper consideration is given to beneficial or adverse effects of such structures in the calculations.

PART B-1
STABILITY

Regulation 5
Intact stability information*

1 Every passenger ship regardless of size and every cargo ship having a length (L) of 24 m and upwards, shall be inclined upon its completion and the elements of its stability determined.

2 The Administration may allow the inclining test of an individual cargo ship to be dispensed with provided basic stability data are available from the inclining test of a sister ship and it is shown to the satisfaction of the Administration that reliable stability information for the exempted ship can be obtained from such basic data, as required by regulation 5-1. A weight survey shall be carried out upon completion and the ship shall be inclined whenever in comparison with the data derived from the sister ship, a deviation from the lightship displacement exceeding 1% for ships of 160 m or more in length and 2% for ships of 50 m or less in length and as determined by linear interpolation for intermediate lengths or a deviation from the lightship longitudinal centre of gravity exceeding 0.5% of L_s is found.

3 The Administration may also allow the inclining test of an individual ship or class of ships especially designed for the carriage of liquids or ore in bulk to be dispensed with when reference to existing data for similar ships clearly indicates that due to the ship's proportions and arrangements more than sufficient metacentric height will be available in all probable loading conditions.

4 Where any alterations are made to a ship so as to materially affect the stability information supplied to the master, amended stability information shall be provided. If necessary the ship shall be re-inclined. The ship shall be re-inclined if anticipated deviations exceed one of the values specified in paragraph 5.

5 At periodical intervals not exceeding five years, a lightweight survey shall be carried out on all passenger ships to verify any changes in lightship displacement and longitudinal centre of gravity. The ship shall be re-inclined whenever, in comparison

* Refer to the Code on Intact Stability for All Types of Ships covered by IMO Instruments, adopted by the Organization by resolution A.749(18).

with the approved stability information, a deviation from the lightship displacement exceeding 2% or a deviation of the longitudinal centre of gravity exceeding 1% of L_s is found or anticipated.

6 Every ship shall have scales of draughts marked clearly at the bow and stern. In the case where the draught marks are not located where they are easily readable, or operational constraints for a particular trade make it difficult to read the draught marks, then the ship shall also be fitted with a reliable draught indicating system by which the bow and stern draughts can be determined.

Regulation 5-1
Stability information to be supplied to the master*

1 The master shall be supplied with such information satisfactory to the Administration as is necessary to enable him by rapid and simple processes to obtain accurate guidance as to the stability of the ship under varying conditions of service. A copy of the stability information shall be furnished to the Administration.

2 The information should include:

.1 curves or tables of minimum operational metacentric height (*GM*) versus draught which assures compliance with the relevant intact and damage stability requirements, alternatively corresponding curves or tables of the maximum allowable vertical centre of gravity (*KG*) versus draught, or with the equivalents of either of these curves;

.2 instructions concerning the operation of cross-flooding arrangements; and

.3 all other data and aids which might be necessary to maintain the required intact stability and stability after damage.

3 The stability information shall show the influence of various trims in cases where the operational trim range exceeds +/- 0.5% of L_s.

4 For ships which have to fulfil the stability requirements of part B-1, information referred to in paragraph 2 are determined from considerations related to the subdivision index, in the following manner: Minimum required *GM* (or maximum permissible vertical position of centre of gravity *KG*) for the three draughts d_s, d_p and d_l are equal to the *GM* (or *KG* values) of corresponding loading cases used for the calculation of survival factor s_i. For intermediate draughts, values to be used shall be obtained by linear interpolation applied to the *GM* value only between the deepest subdivision draught and the partial subdivision draught and between the partial load line and the light service draught respectively. Intact stability criteria will also be taken into account by retaining for each draft the maximum among minimum required *GM* values or the minimum of maximum permissible *KG* values for both criteria. If the subdivision index is calculated for different trims, several required *GM* curves will be established in the same way.

---

* Refer also to the Guidelines for the preparation of intact stability information (MSC/Circ.456); Guidance on the intact stability of existing tankers during transfer operations (MSC/Circ.706); and the Revised guidance to the master for avoiding dangerous situations in following and quartering seas (MSC.1/Circ.1228).

5 When curves or tables of minimum operational metacentric height (*GM*) versus draught are not appropriate, the master should ensure that the operating condition does not deviate from a studied loading condition, or verify by calculation that the stability criteria are satisfied for this loading condition.

Regulation 6
Required subdivision index *R**

1 The subdivision of a ship is considered sufficient if the attained subdivision index *A*, determined in accordance with regulation 7, is not less than the required subdivision index *R* calculated in accordance with this regulation and if, in addition, the partial indices A_s, A_p and A_l are not less than 0.9*R* for passenger ships and 0.5*R* for cargo ships.

2 For all ships to which the damage stability requirements of this chapter apply, the degree of subdivision to be provided shall be determined by the required subdivision index *R*, as follows:

.1 In the case of cargo ships greater than 100 m in length (L_s):

$$R = 1 - \frac{128}{L_s + 152}$$

.2 In the case of cargo ships not less than 80 m in length (L_s) and not greater than 100 m in length (L_s):

$$R = 1 - [1/(1 + \frac{L_s}{100} \times \frac{R_o}{1 - R_o})]$$

where R_o is the value *R* as calculated in accordance with the formula in subparagraph .1.

.3 In the case of passenger ships:

$$R = 1 - \frac{5{,}000}{L_s + 2.5N + 15{,}225}$$

where:

$N = N_1 + 2N_2$
N_1 = number of persons for whom lifeboats are provided
N_2 = number of persons (including officers and crew) the ship is permitted to carry in excess of N_1.

* The Maritime Safety Committee, in adopting the regulations contained in parts B to B-4, invited Administrations to note that the regulations should be applied in conjunction with the explanatory notes developed by the Organization in order to ensure their uniform application.

.4 Where the conditions of service are such that compliance with paragraph 2.3 of this regulation on the basis of $N = N_1 + 2N_2$ is impracticable and where the Administration considers that a suitably reduced degree of hazard exists, a lesser value of N may be taken but in no case less than $N = N_1 + N_2$.

Regulation 7
Attained subdivision index *A*

1 The attained subdivision index A is obtained by the summation of the partial indices A_s, A_p and A_l, (weighted as shown) calculated for the draughts d_s, d_p and d_l defined in regulation 2 in accordance with the following formula:

$$A = 0.4A_s + 0.4A_p + 0.2A_l$$

Each partial index is a summation of contributions from all damage cases taken in consideration, using the following formula:

$$A = \Sigma\, p_i\, s_i$$

where:

i represents each compartment or group of compartments under consideration,

p_i accounts for the probability that only the compartment or group of compartments under consideration may be flooded, disregarding any horizontal subdivision, as defined in regulation 7-1,

s_i accounts for the probability of survival after flooding the compartment or group of compartments under consideration, and includes the effect of any horizontal subdivision, as defined in regulation 7-2.

2 In the calculation of A, the level trim shall be used for the deepest subdivision draught and the partial subdivision draught. The actual service trim shall be used for the light service draught. If in any service condition, the trim variation in comparison with the calculated trim is greater than 0.5% of L_s, one or more additional calculations of A are to be submitted for the same draughts but different trims so that, for all service conditions, the difference in trim in comparison with the reference trim used for one calculation will be less than 0.5% of L_s.

3 When determining the positive righting lever (GZ) of the residual stability curve, the displacement used should be that of the intact condition. That is, the constant displacement method of calculation should be used.

4 The summation indicated by the above formula shall be taken over the ship's subdivision length (L_s) for all cases of flooding in which a single compartment or two or more adjacent compartments are involved. In the case of unsymmetrical arrangements, the calculated A value should be the mean value obtained from calculations involving

both sides. Alternatively, it should be taken as that corresponding to the side which evidently gives the least favourable result.

5 Wherever wing compartments are fitted, contribution to the summation indicated by the formula shall be taken for all cases of flooding in which wing compartments are involved. Additionally, cases of simultaneous flooding of a wing compartment or group of compartments and the adjacent inboard compartment or group of compartments, but excluding damage of transverse extent greater than one half of the ship breadth *B*, may be added. For the purpose of this regulation, transverse extent is measured inboard from ship's side, at right angle to the centreline at the level of the deepest subdivision draught.

6 In the flooding calculations carried out according to the regulations, only one breach of the hull and only one free surface need to be assumed. The assumed vertical extent of damage is to extend from the baseline upwards to any watertight horizontal subdivision above the waterline or higher. However, if a lesser extent of damage will give a more severe result, such extent is to be assumed.

7 If pipes, ducts or tunnels are situated within the assumed extent of damage, arrangements are to be made to ensure that progressive flooding cannot thereby extend to compartments other than those assumed flooded. However, the Administration may permit minor progressive flooding if it is demonstrated that its effects can be easily controlled and the safety of the ship is not impaired.

Regulation 7-1
Calculation of the factor p_i

1 The factor p_i for a compartment or group of compartments shall be calculated in accordance with paragraphs 1.1 and 1.2 using the following notations:

j = the aftmost damage zone number involved in the damage starting with No.1 at the stern;

n = the number of adjacent damage zones involved in the damage;

k = is the number of a particular longitudinal bulkhead as barrier for transverse penetration in a damage zone counted from shell towards the centre line. The shell has $k = 0$;

$x1$ = the distance from the aft terminal of L_s to the aft end of the zone in question;

$x2$ = the distance from the aft terminal of L_s to the forward end of the zone in question;

b = the mean transverse distance in metres measured at right angles to the centreline at the deepest subdivision loadline between the shell and an assumed vertical plane extended between the longitudinal limits used in calculating the factor p_i and which is a tangent to, or common with, all or part of the outermost portion of the longitudinal bulkhead under consideration. This vertical plane shall be so orientated that the mean

transverse distance to the shell is a maximum, but not more than twice the least distance between the plane and the shell. If the upper part of a longitudinal bulkhead is below the deepest subdivision loadline the vertical plane used for determination of b is assumed to extend upwards to the deepest subdivision waterline. In any case, b is not to be taken greater than $B/2$.

If the damage involves a single zone only:

$$p_i = p(x1_j,x2_j) \cdot [r(x1_j,x2_j,b_k) - r(x1_j,x2_j,b_{k-1})]$$

If the damage involves two adjacent zones:

$$\begin{aligned} p_i = \; & p(x1_j,x2_{j+1}) \cdot [r(x1_j,x2_{j+1},b_k) - r(x1_j,x2_{j+1},b_{k-1})] \\ - \; & p(x1_j,x2_j) \cdot [r(x1_j,x2_j,b_k) - r(x1_j,x2_j,b_{k-1})] \\ - \; & p(x1_{j+1},x2_{j+1}) \cdot [r(x1_{j+1},x2_{j+1},b_k) - r(x1_{j+1},x2_{j+1},b_{k-1})] \end{aligned}$$

If the damage involves three or more adjacent zones:

$$\begin{aligned} p_i = \; & p(x1_j,x2_{j+n-1}) \cdot [r(x1_j,x2_{j+n-1},b_k) - r(x1_j,x2_{j+n-1},b_{k-1})] \\ - \; & p(x1_j,x2_{j+n-2}) \cdot [r(x1_j,x2_{j+n-2},b_k) - r(x1_j,x2_{j+n-2},b_{k-1})] \\ - \; & p(x1_{j+1},x2_{j+n-1}) \cdot [r(x1_{j+1},x2_{j+n-1},b_k) - r(x1_{j+1},x2_{j+n-1},b_{k-1})] \\ + \; & p(x1_{j+1},x2_{j+n-2}) \cdot [r(x1_{j+1},x2_{j+n-2},b_k) - r(x1_{j+1},x2_{j+n-2},b_{k-1})] \end{aligned}$$

and where $r(x1, x2, b_0) = 0$

1.1 The factor $p(x1, x2)$ is to be calculated according to the following formulae:

Overall normalized max damage length:	$J_{\max}$	=	10/33
Knuckle point in the distribution:	J_{kn}	=	5/33
Cumulative probability at J_{kn}:	p_k	=	11/12
Maximum absolute damage length:	$l_{\max}$	=	60 m
Length where normalized distribution ends:	L^*	=	260 m

Probability density at $J = 0$:

$$b_0 = 2\left(\frac{p_k}{J_{kn}} - \frac{1-p_k}{J_{\max} - J_{kn}}\right)$$

When $L_s \le L^*$:

$$J_m = \min\left\{J_{\max}, \frac{l_{\max}}{L_s}\right\}$$

$$J_k = \frac{J_m}{2} + \frac{1 - \sqrt{1 + (1-2p_k)b_0 J_m + \frac{1}{4} b_0^{\,2} J_m^{\,2}}}{b_0}$$

$$b_{12} = b_0$$

When $L_s > L^*$:

$$J_m{}^* = \min\left\{J_{\max}, \frac{l_{\max}}{L^*}\right\}$$

$$J_k{}^* = \frac{J_m{}^*}{2} + \frac{1-\sqrt{1+(1-2p_k)b_0 J_m{}^* + \frac{1}{4}b_0{}^2 J_m{}^{*2}}}{b_0}$$

$$J_m = \frac{J_m{}^* \cdot L^*}{L_s}$$

$$J_k = \frac{J_k{}^* \cdot L^*}{L_s}$$

$$b_{12} = 2\left(\frac{p_k}{J_k} - \frac{1-p_k}{J_m - J_k}\right)$$

$$b_{11} = 4\frac{1-p_k}{(J_m - J_k)J_k} - 2\frac{p_k}{J_k{}^2}$$

$$b_{21} = -2\frac{1-p_k}{(J_m - J_k)^2}$$

$$b_{22} = -b_{21}J_m$$

The non-dimensional damage length:

$$J = \frac{(x2 - x1)}{L_s}$$

The normalized length of a compartment or group of compartments:

J_n is to be taken as the lesser of J and J_m

1.1.1 Where neither limits of the compartment or group of compartments under consideration coincides with the aft or forward terminals:

$J \le J_k$:

$$p(x1,x2) = p_1 = \frac{1}{6}\mathrm{J}^2(\mathrm{b}_{11}\mathrm{J} + 3\mathrm{b}_{12})$$

$J > J_k$:

$$p(x1,x2) = p_2 = -\frac{1}{3}b_{11}J_k{}^3 + \frac{1}{2}(b_{11}J - b_{12})J_k{}^2 + b_{12}JJ_k - \frac{1}{3}b_{21}(J_n{}^3 - J_k{}^3)$$

$$+\frac{1}{2}(b_{21}J - b_{22})(J_n^{\ 2} - J_k^{\ 2}) + b_{22}J(J_n - J_k)$$

1.1.2 Where the aft limit of the compartment or group of compartments under consideration coincides with the aft terminal or the forward limit of the compartment or group of compartments under consideration coincides with the forward terminal:

$J \leq J_k$:

$$p(x1,x2) = \frac{1}{2}(p_1 + J)$$

$J > J_k$:

$$p(x1,x2) = \frac{1}{2}(p_2 + J)$$

1.1.3 Where the compartment or groups of compartments considered extends over the entire subdivision length (L_s):

$$p(x1, x2) = 1$$

1.2 The factor $r(x1, x2, b)$ shall be determined by the following formulae:

$$r(x1,x2,b) = 1 - (1 - C)\cdot\left[1 - \frac{G}{p(x1,x2)}\right]$$

where:

$$C = 12\cdot J_b\cdot(-45\cdot J_b + 4), \text{ where}$$

$$J_b = \frac{b}{15\cdot B}$$

1.2.1 Where the compartment or groups of compartments considered extends over the entire subdivision length (L_s):

$$G = G_1 = \frac{1}{2}b_{11}J_b^{\ 2} + b_{12}J_b$$

1.2.2 Where neither limits of the compartment or group of compartments under consideration coincides with the aft or forward terminals:

$$G = G_2 = -\frac{1}{3}b_{11}J_0^{\ 3} + \frac{1}{2}(b_{11}J - b_{12})J_0^{\ 2} + b_{12}JJ_0 \text{ , where}$$

$$J_0 = \min(J, J_b)$$

1.2.3 Where the aft limit of the compartment or group of compartments under consideration coincides with the aft terminal or the forward limit of the compartment or group of compartments under consideration coincides with the forward terminal:

$$G = \frac{1}{2} \cdot \left(G_2 + G_1 \cdot J \right)$$

Regulation 7-2
Calculation of the factor s_i

1 The factor s_i shall be determined for each case of assumed flooding, involving a compartment or group of compartments, in accordance with the following notations and the provisions in this regulation.

θ_e is the equilibrium heel angle in any stage of flooding, in degrees;

θ_v is the angle, in any stage of flooding, where the righting lever becomes negative, or the angle at which an opening incapable of being closed weathertight becomes submerged;

GZ_{max} is the maximum positive righting lever, in metres, up to the angle θ_v;

Range is the range of positive righting levers, in degrees, measured from the angle θ_e. The positive range is to be taken up to the angle θ_v;

Flooding stage is any discrete step during the flooding process, including the stage before equalization (if any) until final equilibrium has been reached.

1.1 The factor s_i, for any damage case at any initial loading condition, d_i, shall be obtained from the formula:

$$s_i = \text{minimum} \{ s_{\text{intermediate,i}} \text{ or } s_{\text{final,i}} \cdot s_{\text{mom,i}} \}$$

where:

$s_{\text{intermediate,i}}$ is the probability to survive all intermediate flooding stages until the final equilibrium stage, and is calculated in accordance with paragraph 2;

$s_{\text{final,i}}$ is the probability to survive in the final equilibrium stage of flooding. It is calculated in accordance with paragraph 3;

$s_{\text{mom,i}}$ is the probability to survive heeling moments, and is calculated in accordance with paragraph 4.

2 The factor $s_{\text{intermediate,i}}$ is applicable only to passenger ships (for cargo ships $s_{\text{intermediate,i}}$ should be taken as unity) and shall be taken as the least of the s-factors obtained from all flooding stages including the stage before equalization, if any, and is to be calculated as follows:

$$s_{\text{intermediate,i}} = \left[\frac{GZ_{\max}}{0.05} \cdot \frac{Range}{7} \right]^{\frac{1}{4}}$$

where GZ_{max} is not to be taken as more than 0.05 m and *Range* as not more than 7°. $s_{intermediate}$ = 0, if the intermediate heel angle exceeds 15º. Where cross-flooding fittings are required, the time for equalization shall not exceed 10 min.

3 The factor $s_{final,i}$ shall be obtained from the formula:

$$s_{final,i} = K \cdot \left[\frac{GZ_{max}}{0.12} \cdot \frac{Range}{16} \right]^{\frac{1}{4}}$$

where:

GZ_{max} is not to be taken as more than 0.12 m;

Range is not to be taken as more than 16°;

$K = 1$ if $\theta_e \leq \theta_{min}$

$K = 0$ if $\theta_e \geq \theta_{max}$

$K = \sqrt{\dfrac{\theta_{max} - \theta_e}{\theta_{max} - \theta_{min}}}$ otherwise,

where:

θ_{min} is 7° for passenger ships and 25° for cargo ships; and

θ_{max} is 15° for passenger ships and 30° for cargo ships.

4 The factor $s_{mom,i}$ is applicable only to passenger ships (for cargo ships $s_{mom,i}$ shall be taken as unity) and shall be calculated at the final equilibrium from the formula:

$$s_{mom,i} = \frac{(GZ_{max} - 0.04) \cdot Displacement}{M_{heel}}$$

where:

Displacement is the intact displacement at the subdivision draught;

M_{heel} is the maximum assumed heeling moment as calculated in accordance with subparagraph 4.1; and

$s_{mom,i} \leq 1$

4.1 The heeling moment M_{heel} is to be calculated as follows:

M_{heel} = maximum $\{M_{passenger}$ or M_{wind} or $M_{Survivalcraft}\}$

4.1.1 $M_{passenger}$ is the maximum assumed heeling moment resulting from movement of passengers, and is to be obtained as follows:

$$M_{passenger} = (0.075 \cdot N_p) \cdot (0.45 \cdot B) \text{ (tm)}$$

where:

N_p is the maximum number of passengers permitted to be on board in the service condition corresponding to the deepest subdivision draught under consideration; and

B is the beam of the ship.

Alternatively, the heeling moment may be calculated assuming the passengers are distributed with 4 persons per square metre on available deck areas towards one side of the ship on the decks where muster stations are located and in such a way that they produce the most adverse heeling moment. In doing so, a weight of 75 kg per passenger is to be assumed.

4.1.2 M_{wind} is the maximum assumed wind force acting in a damage situation:

$$M_{wind} = (P \cdot A \cdot Z) / 9{,}806 \text{ (tm)}$$

where:

P = 120 N/m^2;

A = projected lateral area above waterline;

Z = distance from centre of lateral projected area above waterline to $T/2$; and

T = ship's draught, d_i.

4.1.3 $M_{Survivalcraft}$ is the maximum assumed heeling moment due to the launching of all fully loaded davit-launched survival craft on one side of the ship. It shall be calculated using the following assumptions:

.1 all lifeboats and rescue boats fitted on the side to which the ship has heeled after having sustained damage shall be assumed to be swung out fully loaded and ready for lowering;

.2 for lifeboats which are arranged to be launched fully loaded from the stowed position, the maximum heeling moment during launching shall be taken;

.3 a fully loaded davit-launched liferaft attached to each davit on the side to which the ship has heeled after having sustained damage shall be assumed to be swung out ready for lowering;

.4 persons not in the life-saving appliances which are swung out shall not provide either additional heeling or righting moment; and

.5 life-saving appliances on the side of the ship opposite to the side to which the ship has heeled shall be assumed to be in a stowed position.

5 Unsymmetrical flooding is to be kept to a minimum consistent with the efficient arrangements. Where it is necessary to correct large angles of heel, the means adopted shall, where practicable, be self-acting, but in any case where controls to equalization devices are provided they shall be operable from above the bulkhead deck. These fittings together with their controls shall be acceptable to the Administration.* Suitable information concerning the use of equalization devices shall be supplied to the master of the ship.

5.1 Tanks and compartments taking part in such equalization shall be fitted with air pipes or equivalent means of sufficient cross-section to ensure that the flow of water into the equalization compartments is not delayed.

5.2 In all cases, s_i is to be taken as zero in those cases where the final waterline, taking into account sinkage, heel and trim, immerses:

.1 the lower edge of openings through which progressive flooding may take place and such flooding is not accounted for in the calculation of factor s_i. Such openings shall include air-pipes, ventilators and openings which are closed by means of weathertight doors or hatch covers; and

.2 any part of the bulkhead deck in passenger ships considered a horizontal evacuation route for compliance with chapter II-2.

5.3 The factor s_i is to be taken as zero if, taking into account sinkage, heel and trim, any of the following occur in any intermediate stage or in the final stage of flooding:

.1 immersion of any vertical escape hatch in the bulkhead deck intended for compliance with chapter II-2;

.2 any controls intended for the operation of watertight doors, equalization devices, valves on piping or on ventilation ducts intended to maintain the integrity of watertight bulkheads from above the bulkhead deck become inaccessible or inoperable;

.3 immersion of any part of piping or ventilation ducts carried through a watertight boundary that is located within any compartment included in damage cases contributing to the attained index A, if not fitted with watertight means of closure at each boundary.

---

* Reference is made to the Recommendation on a standard method for establishing compliance with the requirements for cross-flooding arrangements in passengers ships, adopted by the Organization by resolution A.266(VIII), as may be amended.

5.4 However, where compartments assumed flooded due to progressive flooding are taken into account in the damage stability calculations multiple values of $s_{\text{intermediate,i}}$ may be calculated assuming equalization in additional flooding phases.

5.5 Except as provided in paragraph 5.3.1, openings closed by means of watertight manhole covers and flush scuttles, small watertight hatch covers, remotely operated sliding watertight doors, side scuttles of the non-opening type as well as watertight access doors and hatch covers required to be kept closed at sea need not be considered.

6 Where horizontal watertight boundaries are fitted above the waterline under consideration the s-value calculated for the lower compartment or group of compartments shall be obtained by multiplying the value as determined in paragraph 1.1 by the reduction factor v_m according to paragraph 6.1, which represents the probability that the spaces above the horizontal subdivision will not be flooded.

6.1 The factor v_m shall be obtained from the formula:

$$v_m = v(H_{j,\ n,\ m}, d) - v(H_{j,\ n,\ m-1}, d)$$

where:

$H_{j,\ n,\ m}$ is the least height above the baseline, in metres, within the longitudinal range of $x_{1(j)}...x_{2(j+n-1)}$ of the mth horizontal boundary which is assumed to limit the vertical extent of flooding for the damaged compartments under consideration;

$H_{j,\ n,\ m-1}$ is the least height above the baseline, in metres, within the longitudinal range of $x_{1(j)}...x_{2(j+n-1)}$ of the $(m\text{-}1)^{\text{th}}$ horizontal boundary which is assumed to limit the vertical extent of flooding for the damaged compartments under consideration;

j signifies the aft terminal of the damaged compartments under consideration;

m represents each horizontal boundary counted upwards from the waterline under consideration;

d is the draught in question as defined in regulation 2; and

x_1 and x_2 represent the terminals of the compartment or group of compartments considered in regulation 7-1.

6.1.1 The factors $v(H_{j,\ n,\ m}, d)$ and $v(H_{j,\ n,\ m-1}, d)$ shall be obtained from the formulae:

$$v(H,d) = 0.8\frac{(H-d)}{7.8}$$, if $(H_m\text{-}d)$ is less than, or equal to, 7.8 m;

$$v(H,d) = 0.8 + 0.2\left[\frac{(H-d)-7.8}{4.7}\right]$$ in all other cases,

where:

$v(H_{j,\ n,\ m},\ d)$ is to be taken as 1, if H_m coincides with the uppermost watertight boundary of the ship within the range $(x1_{(j)}...x2_{(j+n-1)})$, and

$v(H_{j,\ n,\ 0},\ d)$ is to be taken as 0.

In no case is v_m to be taken as less than zero or more than 1.

6.2 In general, each contribution dA to the index A in the case of horizontal subdivisions is obtained from the formula:

$$dA = p_i \cdot \left[v_1 \cdot s_{\min 1} + \left(v_2 - v_1\right) \cdot s_{\min 2} + \cdots + \left(1 - v_{m-1}\right) \cdot s_{\min m}\right]$$

where:

v_m = the v-value calculated in accordance with paragraph 6.1;
$s_{\min}$ = the least s-factor for all combinations of damages obtained when the assumed damage extends from the assumed damage height H_m downwards.

Regulation 7-3
Permeability

1 For the purpose of the subdivision and damage stability calculations of the regulations, the permeability of each general compartment or part of a compartment shall be as follows:

Spaces	Permeability
Appropriated to stores	0.60
Occupied by accommodation	0.95
Occupied by machinery	0.85
Void spaces	0.95
Intended for liquids	0 or 0.95[1]

[1] Whichever results in the more severe requirement.

2 For the purpose of the subdivision and damage stability calculations of the regulations, the permeability of each cargo compartment or part of a compartment shall be as follows:

Spaces	Permeability at draught d_s	Permeability at draught d_p	Permeability at draught d_l
Dry cargo spaces	0.70	0.80	0.95
Container spaces	0.70	0.80	0.95
Ro-ro spaces	0.90	0.90	0.95
Cargo liquids	0.70	0.80	0.95

3 Other figures for permeability may be used if substantiated by calculations.

Regulation 8
Special requirements concerning passenger ship stability

1 A passenger ship intended to carry 400 or more persons shall have watertight subdivision abaft the collision bulkhead so that $s_i = 1$ for the three loading conditions on which is based the calculation of the subdivision index and for a damage involving all the compartments within 0.08*L* measured from the forward perpendicular.

2 A passenger ship intended to carry 36 or more persons is to be capable of withstanding damage along the side shell to an extent specified in paragraph 3. Compliance with this regulation is to be achieved by demonstrating that s_i, as defined in regulation 7-2, is not less than 0.9 for the three loading conditions on which is based the calculation of the subdivision index.

3 The damage extent to be assumed when demonstrating compliance with paragraph 2, is to be dependent on both *N* as defined in regulation 6, and L_s as defined in regulation 2, such that:

.1 the vertical extent of damage is to extend from the ship's moulded baseline to a position up to 12.5 m above the position of the deepest subdivision draught as defined in regulation 2, unless a lesser vertical extent of damage were to give a lower value of s_i, in which case this reduced extent is to be used;

.2 where 400 or more persons are to be carried, a damage length of $0.03L_s$ but not less than 3 m is to be assumed at any position along the side shell, in conjunction with a penetration inboard of 0.1*B* but not less than 0.75 m measured inboard from the ship side, at right angle to the centreline at the level of the deepest subdivision draught;

.3 where less than 400 persons are carried, damage length is to be assumed at any position along the shell side between transverse watertight bulkheads provided that the distance between two adjacent transverse watertight bulkheads is not less than the assumed damage length. If the distance between adjacent transverse watertight bulkheads is less than the assumed damage length, only one of these bulkheads shall be considered effective for the purpose of demonstrating compliance with paragraph 2;

.4 where 36 persons are carried, a damage length of $0.015L_s$ but not less than 3 m is to be assumed, in conjunction with a penetration inboard of 0.05*B* but not less than 0.75 m; and

.5 where more than 36, but fewer than 400 persons are carried the values of damage length and penetration inboard, used in the determination of the assumed extent of damage, are to be obtained by linear interpolation between the values of damage length and penetration which apply for ships carrying 36 persons and 400 persons as specified in subparagraphs .4 and .2.

Regulation 8-1
System capabilities after a flooding casualty on passenger ships

1 Application

This regulation applies to passenger ships constructed on or after 1 July 2010 to which regulation II-2/21 applies.

2 Availability of essential systems in case of flooding damage *

A passenger ship shall be designed so that the systems specified in regulation II-2/21.4 remain operational when the ship is subject to flooding of any single watertight compartment.

PART B-2
SUBDIVISION, WATERTIGHT AND WEATHERTIGHT INTEGRITY

Regulation 9
Double bottoms in passenger ships and cargo ships other than tankers

1 A double bottom shall be fitted extending from the collision bulkhead to the afterpeak bulkhead, as far as this is practicable and compatible with the design and proper working of the ship.

2 Where a double bottom is required to be fitted the inner bottom shall be continued out to the ship's sides in such a manner as to protect the bottom to the turn of the bilge. Such protection will be deemed satisfactory if the inner bottom is not lower at any part than a plane parallel with the keel line and which is located not less than a vertical distance h measured from the keel line, as calculated by the formula:

$$h = B/20$$

However, in no case is the value of h to be less than 760 mm, and need not be taken as more than 2,000 mm.

3 Small wells constructed in the double bottom in connection with drainage arrangements of holds, etc., shall not extend downward more than necessary. A well extending to the outer bottom is, however, permitted at the after end of the shaft tunnel. Other wells (e.g., for lubricating oil under main engines) may be permitted by the Administration if satisfied that the arrangements give protection equivalent to that afforded by a double bottom complying with this regulation. In no case shall the vertical distance from the bottom of such a well to a plane coinciding with the keel line be less than 500 mm.

---

* Refer to the Performance standards for the systems and services to remain operational on passenger ships for safe return to port and orderly evacuation and abandonment after a casualty (MSC.1/Circ.1214).

4 A double bottom need not be fitted in way of watertight tanks, including dry tanks of moderate size, provided the safety of the ship is not impaired in the event of bottom or side damage.

5 In the case of passenger ships to which the provisions of regulation 1.5 apply and which are engaged on regular service within the limits of a short international voyage as defined in regulation III/3.22, the Administration may permit a double bottom to be dispensed with if satisfied that the fitting of a double bottom in that part would not be compatible with the design and proper working of the ship.

6 Any part of a passenger ship or a cargo ship that is not fitted with a double bottom in accordance with paragraphs 1, 4 or 5 shall be capable of withstanding bottom damages, as specified in paragraph 8, in that part of the ship.

7 In the case of unusual bottom arrangements in a passenger ship or a cargo ship, it shall be demonstrated that the ship is capable of withstanding bottom damages as specified in paragraph 8.

8 Compliance with paragraphs 6 or 7 is to be achieved by demonstrating that s_i, when calculated in accordance with regulation 7-2, is not less than 1 for all service conditions when subject to a bottom damage assumed at any position along the ship's bottom and with an extent specified in subparagraph .2 below for the affected part of the ship:

.1 Flooding of such spaces shall not render emergency power and lighting, internal communication, signals or other emergency devices inoperable in other parts of the ship.

.2 Assumed extent of damage shall be as follows:

	For 0.3 L from the forward perpendicular of the ship	Any other part of the ship
Longitudinal extent	1/3 $L^{2/3}$ or 14.5 m, whichever is less	1/3 $L^{2/3}$ or 14.5 m, whichever is less
Transverse extent	*B*/6 or 10 m, whichever is less	*B*/6 or 5 m, whichever is less
Vertical extent, measured from the keel line	*B*/20 or 2 m, whichever is less	*B*/20 or 2 m, whichever is less

.3 If any damage of a lesser extent than the maximum damage specified in subparagraph .2 would result in a more severe condition, such damage should be considered.

9 In case of large lower holds in passenger ships, the Administration may require an increased double bottom height of not more than *B*/10 or 3 m, whichever is less, measured from the keel line. Alternatively, bottom damages may be calculated for these areas, in accordance with paragraph 8, but assuming an increased vertical extent.

Regulation 10
Construction of watertight bulkheads

1 Each watertight subdivision bulkhead, whether transverse or longitudinal, shall be constructed having scantlings as specified in regulation 2.17. In all cases, watertight subdivision bulkheads shall be capable of supporting at least the pressure due to a head of water up to the bulkhead deck.

2 Steps and recesses in watertight bulkheads shall be as strong as the bulkhead at the place where each occurs.

Regulation 11
Initial testing of watertight bulkheads, etc.

1 Testing watertight spaces not intended to hold liquids and cargo holds intended to hold ballast by filling them with water is not compulsory. When testing by filling with water is not carried out, a hose test shall be carried out where practicable. This test shall be carried out in the most advanced stage of the fitting out of the ship. Where a hose test is not practicable because of possible damage to machinery, electrical equipment insulation or outfitting items, it may be replaced by a careful visual examination of welded connections, supported where deemed necessary by means such as a dye penetrant test or an ultrasonic leak test or an equivalent test. In any case a thorough inspection of the watertight bulkheads shall be carried out.

2 The forepeak, double bottom (including duct keels) and inner skins shall be tested with water to a head corresponding to the requirements of regulation 10.1.

3 Tanks which are intended to hold liquids, and which form part of the watertight subdivision of the ship, shall be tested for tightness and structural strength with water to a head corresponding to its design pressure. The water head is in no case to be less than the top of the air pipes or to a level of 2.4 m above the top of the tank, whichever is the greater.

4 The tests referred to in paragraphs 2 and 3 are for the purpose of ensuring that the subdivision structural arrangements are watertight and are not to be regarded as a test of the fitness of any compartment for the storage of oil fuel or for other special purposes for which a test of a superior character may be required depending on the height to which the liquid has access in the tank or its connections.

Regulation 12
Peak and machinery space bulkheads, shaft tunnels, etc.

1 A collision bulkhead shall be fitted which shall be watertight up to the bulkhead deck. This bulkhead shall be located at a distance from the forward perpendicular of not less than $0.05L$ or 10 m, whichever is the less, and, except as may be permitted by the Administration, not more than $0.08L$ or $0.05L + 3$ m, whichever is the greater.

2 Where any part of the ship below the waterline extends forward of the forward perpendicular, e.g., a bulbous bow, the distances stipulated in paragraph 1 shall be measured from a point either:

.1 at the mid-length of such extension;

.2 at a distance 0.015*L* forward of the forward perpendicular; or

.3 at a distance 3 m forward of the forward perpendicular,

whichever gives the smallest measurement.

3 The bulkhead may have steps or recesses provided they are within the limits prescribed in paragraph 1 or 2.

4 No doors, manholes, access openings, ventilation ducts or any other openings shall be fitted in the collision bulkhead below the bulkhead deck.

5.1 Except as provided in paragraph 5.2, the collision bulkhead may be pierced below the bulkhead deck by not more than one pipe for dealing with fluid in the forepeak tank, provided that the pipe is fitted with a screw-down valve capable of being operated from above the bulkhead deck, the valve chest being secured inside the forepeak to the collision bulkhead. The Administration may, however, authorize the fitting of this valve on the after side of the collision bulkhead provided that the valve is readily accessible under all service conditions and the space in which it is located is not a cargo space. All valves shall be of steel, bronze or other approved ductile material. Valves of ordinary cast iron or similar material are not acceptable.

5.2 If the forepeak is divided to hold two different kinds of liquids the Administration may allow the collision bulkhead to be pierced below the bulkhead deck by two pipes, each of which is fitted as required by paragraph 5.1, provided the Administration is satisfied that there is no practical alternative to the fitting of such a second pipe and that, having regard to the additional subdivision provided in the forepeak, the safety of the ship is maintained.

6 Where a long forward superstructure is fitted the collision bulkhead shall be extended weathertight to the deck next above the bulkhead deck. The extension need not be fitted directly above the bulkhead below provided it is located within the limits prescribed in paragraph 1 or 2 with the exception permitted by paragraph 7 and that the part of the deck which forms the step is made effectively weathertight. The extension shall be so arranged as to preclude the possibility of the bow door causing damage to it in the case of damage to, or detachment of, a bow door.

7 Where bow doors are fitted and a sloping loading ramp forms part of the extension of the collision bulkhead above the bulkhead deck the ramp shall be weathertight over its complete length. In cargo ships the part of the ramp which is more than 2.3 m above the bulkhead deck may extend forward of the limit specified in paragraph 1 or 2. Ramps not meeting the above requirements shall be disregarded as an extension of the collision bulkhead.

8 The number of openings in the extension of the collision bulkhead above the freeboard deck shall be restricted to the minimum compatible with the design and normal operation of the ship. All such openings shall be capable of being closed weathertight.

9 Bulkheads shall be fitted separating the machinery space from cargo and accommodation spaces forward and aft and made watertight up to the bulkhead deck. In passenger ships an afterpeak bulkhead shall also be fitted and made watertight up to the bulkhead deck. The afterpeak bulkhead may, however, be stepped below the bulkhead deck, provided the degree of safety of the ship as regards subdivision is not thereby diminished.

10 In all cases stern tubes shall be enclosed in watertight spaces of moderate volume. In passenger ships the stern gland shall be situated in a watertight shaft tunnel or other watertight space separate from the stern tube compartment and of such volume that, if flooded by leakage through the stern gland, the bulkhead deck will not be immersed. In cargo ships other measures to minimize the danger of water penetrating into the ship in case of damage to stern tube arrangements may be taken at the discretion of the Administration.

Regulation 13
Openings in watertight bulkheads below the bulkhead deck in passenger ships

1 The number of openings in watertight bulkheads shall be reduced to the minimum compatible with the design and proper working of the ship, satisfactory means shall be provided for closing these openings.

2.1 Where pipes, scuppers, electric cables, etc., are carried through watertight bulkheads, arrangements shall be made to ensure the watertight integrity of the bulkheads.

2.2 Valves not forming part of a piping system shall not be permitted in watertight bulkheads.

2.3 Lead or other heat sensitive materials shall not be used in systems which penetrate watertight bulkheads, where deterioration of such systems in the event of fire would impair the watertight integrity of the bulkheads.

3 No doors, manholes, or access openings are permitted in watertight transverse bulkheads dividing a cargo space from an adjoining cargo space, except as provided in paragraph 9.1 and in regulation 14.

4 Subject to paragraph 10, not more than one door, apart from the doors to shaft tunnels, may be fitted in each watertight bulkhead within spaces containing the main and auxiliary propulsion machinery including boilers serving the needs of propulsion. Where two or more shafts are fitted, the tunnels shall be connected by an intercommunicating passage. There shall be only one door between the machinery space and the tunnel spaces where two shafts are fitted and only two doors where there are more than two shafts. All these doors shall be of the sliding type and shall be so located as to have their sills as high as practicable. The hand gear for operating these doors from above the bulkhead deck shall be situated outside the spaces containing the machinery.

5.1 Watertight doors, except as provided in paragraph 9.1 or regulation 14, shall be power-operated sliding doors complying with the requirements of paragraph 7 capable of being closed simultaneously from the central operating console at the navigation bridge in not more than 60 s with the ship in the upright position.

5.2 The means of operation whether by power or by hand of any power-operated sliding watertight door shall be capable of closing the door with the ship listed to 15° either way. Consideration shall also be given to the forces which may act on either side of the door as may be experienced when water is flowing through the opening applying a static head equivalent to a water height of at least 1 m above the sill on the centreline of the door.

5.3 Watertight door controls, including hydraulic piping and electric cables, shall be kept as close as practicable to the bulkhead in which the doors are fitted, in order to minimize the likelihood of them being involved in any damage which the ship may sustain. The positioning of watertight doors and their controls shall be such that if the ship sustains damage within one fifth of the breadth of the ship, as defined in regulation 2, such distance being measured at right angles to the centreline at the level of the deepest subdivision draught, the operation of the watertight doors clear of the damaged portion of the ship is not impaired.

6 All power-operated sliding watertight doors shall be provided with means of indication which will show at all remote operating positions whether the doors are open or closed. Remote operating positions shall only be at the navigation bridge as required by paragraph 7.1.5 and at the location where hand operation above the bulkhead deck is required by paragraph 7.1.4.

7.1 Each power-operated sliding watertight door:

.1 shall have a vertical or horizontal motion;

.2 shall, subject to paragraph 10, be normally limited to a maximum clear opening width of 1.2 m. The Administration may permit larger doors only to the extent considered necessary for the effective operation of the ship provided that other safety measures, including the following, are taken into consideration:

.1 special consideration shall be given to the strength of the door and its closing appliances in order to prevent leakages; and

.2 the door shall be located inboard the damage zone *B*/5;

.3 shall be fitted with the necessary equipment to open and close the door using electric power, hydraulic power, or any other form of power that is acceptable to the Administration;

.4 shall be provided with an individual hand-operated mechanism. It shall be possible to open and close the door by hand at the door itself from either side, and in addition, close the door from an accessible position above the bulkhead deck with an all round crank motion or some other movement providing the same degree of safety acceptable to the Administration. Direction of rotation or other movement is to be clearly indicated at all operating positions. The time necessary for the complete closure of the door, when operating by hand gear, shall not exceed 90 s with the ship in the upright position;

.5 shall be provided with controls for opening and closing the door by power from both sides of the door and also for closing the door by power from the central operating console at the navigation bridge;

.6 shall be provided with an audible alarm, distinct from any other alarm in the area, which will sound whenever the door is closed remotely by power and which shall sound for at least 5 s but no more than 10 s before the door begins to move and shall continue sounding until the door is completely closed. In the case of remote hand operation it is sufficient for the audible alarm to sound only when the door is moving. Additionally, in passenger areas and areas of high ambient noise the Administration may require the audible alarm to be supplemented by an intermittent visual signal at the door; and

.7 shall have an approximately uniform rate of closure under power. The closure time, from the time the door begins to move to the time it reaches the completely closed position shall in no case be less than 20 s or more than 40 s with the ship in the upright position.

7.2 The electrical power required for power-operated sliding watertight doors shall be supplied from the emergency switchboard either directly or by a dedicated distribution board situated above the bulkhead deck. The associated control, indication and alarm circuits shall be supplied from the emergency switchboard either directly or by a dedicated distribution board situated above the bulkhead deck and be capable of being automatically supplied by the transitional source of emergency electrical power required by regulation 42.3.1.3 in the event of failure of either the main or emergency source of electrical power.

7.3 Power-operated sliding watertight doors shall have either:

.1 a centralized hydraulic system with two independent power sources each consisting of a motor and pump capable of simultaneously closing all doors. In addition, there shall be for the whole installation hydraulic accumulators of sufficient capacity to operate all the doors at least three times, i.e. closed-open-closed, against an adverse list of 15º. This operating cycle shall be capable of being carried out when the accumulator is at the pump cut-in pressure. The fluid used shall be chosen considering the temperatures liable to be encountered by the installation during its service. The power operating system shall be designed to minimize the possibility of having a single failure in the hydraulic piping adversely affect the operation of more than one door. The hydraulic system shall be provided with a low-level alarm for hydraulic fluid reservoirs serving the power-operated system and a low gas pressure alarm or other effective means of monitoring loss of stored energy in hydraulic accumulators. These alarms are to be audible and visual and shall be situated on the central operating console at the navigation bridge; or

.2 an independent hydraulic system for each door with each power source consisting of a motor and pump capable of opening and closing the door. In addition, there shall be a hydraulic accumulator of sufficient capacity to

operate the door at least three times, i.e. closed-open-closed, against an adverse list of 15°. This operating cycle shall be capable of being carried out when the accumulator is at the pump cut-in pressure. The fluid used shall be chosen considering the temperatures liable to be encountered by the installation during its service. A low gas pressure group alarm or other effective means of monitoring loss of stored energy in hydraulic accumulators shall be provided at the central operating console on the navigation bridge. Loss of stored energy indication at each local operating position shall also be provided; or

.3 an independent electrical system and motor for each door with each power source consisting of a motor capable of opening and closing the door. The power source shall be capable of being automatically supplied by the transitional source of emergency electrical power as required by regulation 42.4.2 – in the event of failure of either the main or emergency source of electrical power and with sufficient capacity to operate the door at least three times, i.e. closed-open-closed, against an adverse list of 15°.

For the systems specified in paragraphs 7.3.1, 7.3.2 and 7.3.3, provision should be made as follows: Power systems for power-operated watertight sliding doors shall be separate from any other power system. A single failure in the electric or hydraulic power-operated systems excluding the hydraulic actuator shall not prevent the hand operation of any door.

7.4 Control handles shall be provided at each side of the bulkhead at a minimum height of 1.6 m above the floor and shall be so arranged as to enable persons passing through the doorway to hold both handles in the open position without being able to set the power closing mechanism in operation accidentally. The direction of movement of the handles in opening and closing the door shall be in the direction of door movement and shall be clearly indicated.

7.5 As far as practicable, electrical equipment and components for watertight doors shall be situated above the bulkhead deck and outside hazardous areas and spaces.

7.6 The enclosures of electrical components necessarily situated below the bulkhead deck shall provide suitable protection against the ingress of water.*

7.7 Electric power, control, indication and alarm circuits shall be protected against fault in such a way that a failure in one door circuit will not cause a failure in any other door circuit. Short circuits or other faults in the alarm or indicator circuits of a door shall not result in a loss of power operation of that door. Arrangements shall be such that leakage of water into the electrical equipment located below the bulkhead deck will not cause the door to open.

---

* Refer to the following publication IEC 529(1976):
.1 electrical motors, associated circuits and control components; protected to IPX 7 standard;
.2 door position indicators and associated circuit components; protected to IPX 8 standard; and
.3 door movement warning signals; protected to IPX 6 standard.

Other arrangements for the enclosures of electrical components may be fitted provided the Administration is satisfied that an equivalent protection is achieved. The water pressure IPX 8 shall be based on the pressure that may occur at the location of the component during flooding for a period of 36 h.

7.8 A single electrical failure in the power operating or control system of a power-operated sliding watertight door shall not result in a closed door opening. Availability of the power supply should be continuously monitored at a point in the electrical circuit as near as practicable to each of the motors required by paragraph 7.3. Loss of any such power supply should activate an audible and visual alarm at the central operating console at the navigation bridge.

8.1 The central operating console at the navigation bridge shall have a "master mode" switch with two modes of control: a "local control" mode which shall allow any door to be locally opened and locally closed after use without automatic closure, and a "doors closed" mode which shall automatically close any door that is open. The "doors closed" mode shall automatically close any door that is open. The "doors closed" mode shall permit doors to be opened locally and shall automatically re-close the doors upon release of the local control mechanism. The "master mode" switch shall normally be in the "local control" mode. The "doors closed" mode shall only be used in an emergency or for testing purposes. Special consideration shall be given to the reliability of the "master mode" switch.

8.2 The central operating console at the navigation bridge shall be provided with a diagram showing the location of each door, with visual indicators to show whether each door is open or closed. A red light shall indicate a door is fully open and a green light shall indicate a door is fully closed. When the door is closed remotely the red light shall indicate the intermediate position by flashing. The indicating circuit shall be independent of the control circuit for each door.

8.3 It shall not be possible to remotely open any door from the central operating console.

9.1 If the Administration is satisfied that such doors are essential, watertight doors of satisfactory construction may be fitted in watertight bulkheads dividing cargo between deck spaces. Such doors may be hinged, rolling or sliding doors but shall not be remotely controlled. They shall be fitted at the highest level and as far from the shell plating as practicable, but in no case shall the outboard vertical edges be situated at a distance from the shell plating which is less than one fifth of the breadth of the ship, as defined in regulation 2, such distance being measured at right angles to the centreline at the level of the deepest subdivision draught.

9.2 Should any such doors be accessible during the voyage, they shall be fitted with a device which prevents unauthorized opening. When it is proposed to fit such doors, the number and arrangements shall receive the special consideration of the Administration.

10 Portable plates on bulkheads shall not be permitted except in machinery spaces. The Administration may permit not more than one power-operated sliding watertight door in each watertight bulkhead larger than those specified in paragraph 7.1.2 to be substituted for these portable plates, provided these doors are intended to remain closed during navigation except in case of urgent necessity at the discretion of the master. These doors need not meet the requirements of paragraph 7.1.4 regarding complete closure by hand-operated gear in 90 s.

11.1 Where trunkways or tunnels for access from crew accommodation to the stokehold, for piping, or for any other purpose are carried through watertight bulkheads, they shall be watertight and in accordance with the requirements of regulation 16-1. The access to at least one end of each such tunnel or trunkway, if used as a passage at sea, shall be through a trunk extending watertight to a height sufficient to permit access above the bulkhead deck. The access to the other end of the trunkway or tunnel may be through a watertight door of the type required by its location in the ship. Such trunkways or tunnels shall not extend through the first subdivision bulkhead abaft the collision bulkhead.

11.2 Where it is proposed to fit tunnels piercing watertight bulkheads, these shall receive the special consideration of the Administration.

11.3 Where trunkways in connection with refrigerated cargo and ventilation or forced draught trunks are carried through more than one watertight bulkhead, the means of closure at such openings shall be operated by power and be capable of being closed from a central position situated above the bulkhead deck.

Regulation 13-1
Openings in watertight bulkheads and internal decks in cargo ships

1 The number of openings in watertight subdivisions is to be kept to a minimum compatible with the design and proper working of the ship. Where penetrations of watertight bulkheads and internal decks are necessary for access, piping, ventilation, electrical cables, etc., arrangements are to be made to maintain the watertight integrity. The Administration may permit relaxation in the watertightness of openings above the freeboard deck, provided that it is demonstrated that any progressive flooding can be easily controlled and that the safety of the ship is not impaired.

2 Doors provided to ensure the watertight integrity of internal openings which are used while at sea are to be sliding watertight doors capable of being remotely closed from the bridge and are also to be operable locally from each side of the bulkhead. Indicators are to be provided at the control position showing whether the doors are open or closed, and an audible alarm is to be provided at the door closure. The power, control and indicators are to be operable in the event of main power failure. Particular attention is to be paid to minimizing the effect of control system failure. Each power-operated sliding watertight door shall be provided with an individual hand-operated mechanism. It shall be possible to open and close the door by hand at the door itself from both sides.

3 Access doors and access hatch covers normally closed at sea, intended to ensure the watertight integrity of internal openings, shall be provided with means of indication locally and on the bridge showing whether these doors or hatch covers are open or closed. A notice is to be affixed to each such door or hatch cover to the effect that it is not to be left open.

4 Watertight doors or ramps of satisfactory construction may be fitted to internally subdivide large cargo spaces, provided that the Administration is satisfied that such doors or ramps are essential. These doors or ramps may be hinged, rolling or sliding doors or

ramps, but shall not be remotely controlled.* Should any of the doors or ramps be accessible during the voyage, they shall be fitted with a device which prevents unauthorized opening.

5 Other closing appliances which are kept permanently closed at sea to ensure the watertight integrity of internal openings shall be provided with a notice which is to be affixed to each such closing appliance to the effect that it is to be kept closed. Manholes fitted with closely bolted covers need not be so marked.

Regulation 14
Passenger ships carrying goods vehicles and accompanying personnel

1 This regulation applies to passenger ships designed or adapted for the carriage of goods vehicles and accompanying personnel.

2 If in such a ship the total number of passengers which include personnel accompanying vehicles does not exceed $12 + A_d/25$, where A_d = total deck area (square metres) of spaces available for the stowage of goods vehicles and where the clear height at the stowage position and at the entrance to such spaces is not less than 4 m, the provisions of regulations 13.9.1 and 13.9.2 in respect of watertight doors apply except that the doors may be fitted at any level in watertight bulkheads dividing cargo spaces. Additionally, indicators are required on the navigation bridge to show automatically when each door is closed and all door fastenings are secured.

3 The ship may not be certified for a higher number of passengers than assumed in paragraph 2, if a watertight door has been fitted in accordance with this regulation.

Regulation 15
Openings in the shell plating below the bulkhead deck of passenger ships and the freeboard deck of cargo ships

1 The number of openings in the shell plating shall be reduced to the minimum compatible with the design and proper working of the ship.

2 The arrangement and efficiency of the means for closing any opening in the shell plating shall be consistent with its intended purpose and the position in which it is fitted and generally to the satisfaction of the Administration.

3.1 Subject to the requirements of the International Convention on Load Lines in force, no sidescuttle shall be fitted in such a position that its sill is below a line drawn parallel to the bulkhead deck at side and having its lowest point 2.5% of the breadth of the ship above the deepest subdivision draught, or 500 mm, whichever is the greater.

3.2 All sidescuttles the sills of which are below the bulkhead deck of passenger ships and the freeboard deck of cargo ships, as permitted by paragraph 3.1, shall be of such construction as will effectively prevent any person opening them without the consent of the master of the ship.

---

* Refer to Interpretations of regulations of part B-1 of SOLAS chapter II-1 (MSC/Circ.651).

4 Efficient hinged inside deadlights so arranged that they can be easily and effectively closed and secured watertight, shall be fitted to all sidescuttles except that abaft one eighth of the ship's length from the forward perpendicular and above a line drawn parallel to the bulkhead deck at side and having its lowest point at a height of 3.7 m plus 2.5% of the breadth of the ship above the deepest subdivision draught, the deadlights may be portable in passenger accommodation other than that for steerage passengers, unless the deadlights are required by the International Convention on Load Lines in force to be permanently attached in their proper positions. Such portable deadlights shall be stowed adjacent to the sidescuttles they serve.

5.1 No sidescuttles shall be fitted in any spaces which are appropriated exclusively to the carriage of cargo or coal.

5.2 Sidescuttles may, however, be fitted in spaces appropriated alternatively to the carriage of cargo or passengers, but they shall be of such construction as will effectively prevent any person opening them or their deadlights without the consent of the master.

6 Automatic ventilating sidescuttles shall not be fitted in the shell plating below the bulkhead deck of passenger ships and the freeboard deck of cargo ships without the special sanction of the Administration.

7 The number of scuppers, sanitary discharges and other similar openings in the shell plating shall be reduced to the minimum either by making each discharge serve for as many as possible of the sanitary and other pipes, or in any other satisfactory manner.

8.1 All inlets and discharges in the shell plating shall be fitted with efficient and accessible arrangements for preventing the accidental admission of water into the ship.

8.2.1 Subject to the requirements of the International Convention on Load Lines in force, and except as provided in paragraph 8.3, each separate discharge led through the shell plating from spaces below the bulkhead deck of passenger ships and the freeboard deck of cargo ships shall be provided with either one automatic non-return valve fitted with a positive means of closing it from above the bulkhead deck or with two automatic non-return valves without positive means of closing, provided that the inboard valve is situated above the deepest subdivision draught and is always accessible for examination under service conditions. Where a valve with positive means of closing is fitted, the operating position above the bulkhead deck shall always be readily accessible and means shall be provided for indicating whether the valve is open or closed.

8.2.2 The requirements of the International Convention on Load Lines in force shall apply to discharges led through the shell plating from spaces above the bulkhead deck of passenger ships and the freeboard deck of cargo ships.

8.3 Machinery space, main and auxiliary sea inlets and discharges in connection with the operation of machinery shall be fitted with readily accessible valves between the pipes and the shell plating or between the pipes and fabricated boxes attached to the shell plating. In manned machinery spaces the valves may be controlled locally and shall be provided with indicators showing whether they are open or closed.

8.4 Moving parts penetrating the shell plating below the deepest subdivision draught shall be fitted with a watertight sealing arrangement acceptable to the Administration. The inboard gland shall be located within a watertight space of such volume that, if flooded, the bulkhead deck will not be submerged. The Administration may require that if such compartment is flooded, essential or emergency power and lighting, internal communication, signals or other emergency devices must remain available in other parts of the ship.

8.5 All shell fittings and valves required by this regulation shall be of steel, bronze or other approved ductile material. Valves of ordinary cast iron or similar material are not acceptable. All pipes to which this regulation refers shall be of steel or other equivalent material to the satisfaction of the Administration.

9 Gangway, cargo and fuelling ports fitted below the bulkhead deck of passenger ships and the freeboard deck of cargo ships shall be watertight and in no case be so fitted as to have their lowest point below the deepest subdivision draught.

10.1 The inboard opening of each ash-chute, rubbish-chute, etc., shall be fitted with an efficient cover.

10.2 If the inboard opening is situated below the bulkhead deck of passenger ships and the freeboard deck of cargo ships, the cover shall be watertight and, in addition, an automatic non-return valve shall be fitted in the chute in an easily accessible position above the deepest subdivision draught.

Regulation 15-1
External openings in cargo ships

1 All external openings leading to compartments assumed intact in the damage analysis, which are below the final damage waterline, are required to be watertight.

2 External openings required to be watertight in accordance with paragraph 1 shall, except for cargo hatch covers, be fitted with indicators on the bridge.

3 Openings in the shell plating below the deck limiting the vertical extent of damage shall be fitted with a device that prevents unauthorized opening if they are accessible during the voyage.

4 Other closing appliances which are kept permanently closed at sea to ensure the watertight integrity of external openings shall be provided with a notice affixed to each appliance to the effect that it is to be kept closed. Manholes fitted with closely bolted covers need not be so marked.

Regulation 16
Construction and initial tests of watertight doors, sidescuttles, etc.

1 In all ships:

.1 the design, materials and construction of all watertight doors, sidescuttles, gangway and cargo ports, valves, pipes, ash-chutes and rubbish-chutes

referred to in these regulations shall be to the satisfaction of the Administration;

.2 such valves, doors and mechanisms shall be suitably marked to ensure that they may be properly used to provide maximum safety; and

.3 the frames of vertical watertight doors shall have no groove at the bottom in which dirt might lodge and prevent the door closing properly.

2 In passenger ships and cargo ships watertight doors shall be tested by water pressure to a head of water they might sustain in a final or intermediate stage of flooding. Where testing of individual doors is not carried out because of possible damage to insulation or outfitting items, testing of individual doors may be replaced by a prototype pressure test of each type and size of door with a test pressure corresponding at least to the head required for the intended location. The prototype test shall be carried out before the door is fitted. The installation method and procedure for fitting the door on board shall correspond to that of the prototype test. When fitted on board, each door shall be checked for proper seating between the bulkhead, the frame and the door.

Regulation 16-1
Construction and initial tests of watertight decks, trunks, etc.

1 Watertight decks, trunks, tunnels, duct keels and ventilators shall be of the same strength as watertight bulkheads at corresponding levels. The means used for making them watertight, and the arrangements adopted for closing openings in them, shall be to the satisfaction of the Administration. Watertight ventilators and trunks shall be carried at least up to the bulkhead deck in passenger ships and up to the freeboard deck in cargo ships.

2 Where a ventilation trunk passing through a structure penetrates the bulkhead deck, the trunk shall be capable of withstanding the water pressure that may be present within the trunk, after having taken into account the maximum heel angle allowable during intermediate stages of flooding, in accordance with regulation 7-2.

3 Where all or part of the penetration of the bulkhead deck is on the main ro-ro deck, the trunk shall be capable of withstanding impact pressure due to internal water motions (sloshing) of water trapped on the ro-ro deck.

4 After completion, a hose or flooding test shall be applied to watertight decks and a hose test to watertight trunks, tunnels and ventilators.

Regulation 17
Internal watertight integrity of passenger ships above the bulkhead deck

1 The Administration may require that all reasonable and practicable measures shall be taken to limit the entry and spread of water above the bulkhead deck. Such measures may include partial bulkheads or webs. When partial watertight bulkheads and webs are fitted on the bulkhead deck, above or in the immediate vicinity of watertight bulkheads, they shall have watertight shell and bulkhead deck connections so as to restrict the flow of water along the deck when the ship is in a heeled damaged condition. Where the

partial watertight bulkhead does not line up with the bulkhead below, the bulkhead deck between shall be made effectively watertight. Where openings, pipes, scuppers, electric cables etc. are carried through the partial watertight bulkheads or decks within the immersed part of the bulkhead deck, arrangements shall be made to ensure the watertight integrity of the structure above the bulkhead deck.*

2 All openings in the exposed weather deck shall have coamings of ample height and strength and shall be provided with efficient means for expeditiously closing them weathertight. Freeing ports, open rails and scuppers shall be fitted as necessary for rapidly clearing the weather deck of water under all weather conditions.

3 The open end of air pipes terminating within a superstructure shall be at least 1 m above the waterline when the ship heels to an angle of 15º, or the maximum angle of heel during intermediate stages of flooding, as determined by direct calculation, whichever is the greater. Alternatively, air pipes from tanks other than oil tanks may discharge through the side of the superstructure. The provisions of this paragraph are without prejudice to the provisions of the International Convention on Load Lines in force.

4 Sidescuttles, gangway, cargo and fuelling ports and other means for closing openings in the shell plating above the bulkhead deck shall be of efficient design and construction and of sufficient strength having regard to the spaces in which they are fitted and their positions relative to the deepest subdivision draught.**

5 Efficient inside deadlights, so arranged that they can be easily and effectively closed and secured watertight, shall be provided for all sidescuttles to spaces below the first deck above the bulkhead deck.

Regulation 17-1
Integrity of the hull and superstructure, damage prevention and control on ro-ro passenger ships

1.1 Subject to the provisions of paragraphs 1.2 and 1.3, all accesses that lead to spaces below the bulkhead deck shall have a lowest point which is not less than 2.5 m above the bulkhead deck.

1.2 Where vehicle ramps are installed to give access to spaces below the bulkhead deck, their openings shall be able to be closed weathertight to prevent ingress of water below, alarmed and indicated to the navigation bridge.

1.3 The Administration may permit the fitting of particular accesses to spaces below the bulkhead deck provided they are necessary for the essential working of the ship, e.g. the movement of machinery and stores, subject to such accesses being made watertight, alarmed and indicated on the navigation bridge.

---

* Refer to the Guidance notes on the integrity of flooding boundaries above the bulkhead deck of passenger ships for proper application of regulations II-1/8 and 20, paragraph 1, of SOLAS 1974, as amended (MSC/Circ.541, as may be amended).

** Refer to the Recommendation on strength and security and locking arrangements of shell doors on ro-ro passenger ships, adopted by the Organization by resolution A.793(19).

2 Indicators shall be provided on the navigation bridge for all shell doors, loading doors and other closing appliances which, if left open or not properly secured, could, in the opinion of the Administration, lead to flooding of a special category space or ro-ro space. The indicator system shall be designed on the fail-safe principle and shall show by visual alarms if the door is not fully closed or if any of the securing arrangements are not in place and fully locked and by audible alarms if such door or closing appliances become open or the securing arrangements become unsecured. The indicator panel on the navigation bridge shall be equipped with a mode selection function "harbour/sea voyage" so arranged that an audible alarm is given on the navigation bridge if the ship leaves harbour with the bow doors, inner doors, stern ramp or any other side shell doors not closed or any closing device not in the correct position. The power supply for the indicator system shall be independent of the power supply for operating and securing the doors.

3 Television surveillance and a water leakage detection system shall be arranged to provide an indication to the navigation bridge and to the engine control station of any leakage through inner and outer bow doors, stern doors or any other shell doors which could lead to flooding of special category spaces or ro-ro spaces.

PART B-3
SUBDIVISION LOAD LINE ASSIGNMENT FOR PASSENGER SHIPS

Regulation 18
Assigning, marking and recording of subdivision load lines for passenger ships

1 In order that the required degree of subdivision shall be maintained, a load line corresponding to the approved subdivision draught shall be assigned and marked on the ship's sides. A ship intended for alternating modes of operation may, if the owners desire, have one or more additional load lines assigned and marked to correspond with the subdivision draughts which the Administration may approve for the alternative service configurations. Each service configuration so approved shall comply with part B-1 of this chapter independently of the results obtained for other modes of operation.

2 The subdivision load lines assigned and marked shall be recorded in the Passenger Ship Safety Certificate, and shall be distinguished by the notation P1 for the principal passenger service configuration, and P2, P3, etc., for the alternative configurations. The principal passenger configuration shall be taken as the mode of operation in which the required subdivision index *R* will have the highest value.

3 The freeboard corresponding to each of these load lines shall be measured at the same position and from the same deck line as the freeboards determined in accordance with the International Convention on Load Lines in force.

4 The freeboard corresponding to each approved subdivision load line and the service configuration, for which it is approved, shall be clearly indicated on the Passenger Ship Safety Certificate.

5 In no case shall any subdivision load line mark be placed above the deepest load line in salt water as determined by the strength of the ship or the International Convention on Load Lines in force.

6 Whatever may be the position of the subdivision load line marks, a ship shall in no case be loaded so as to submerge the load line mark appropriate to the season and locality as determined in accordance with the International Convention on Load Lines in force.

7 A ship shall in no case be so loaded that when it is in salt water the subdivision load line mark appropriate to the particular voyage and service configuration is submerged.

PART B-4
STABILITY MANAGEMENT

Regulation 19
Damage control information

1 There shall be permanently exhibited, or readily available on the navigation bridge, for the guidance of the officer in charge of the ship, plans showing clearly for each deck and hold the boundaries of the watertight compartments, the openings therein with the means of closure and position of any controls thereof, and the arrangements for the correction of any list due to flooding. In addition, booklets containing the aforementioned information shall be made available to the officers of the ship.*

2 Watertight doors in passenger ships permitted to remain open during navigation shall be clearly indicated in the ship's stability information.

3 General precautions to be included shall consist of a listing of equipment, conditions, and operational procedures, considered by the Administration to be necessary to maintain watertight integrity under normal ship operations.

4 Specific precautions to be included shall consist of a listing of elements (i.e. closures, security of cargo, sounding of alarms, etc.) considered by the Administration to be vital to the survival of the ship, passengers and crew.

5 In case of ships to which damage stability requirements of part B-1 apply, damage stability information shall provide the master a simple and easily understandable way of assessing the ship's survivability in all damage cases involving a compartment or group of compartments.**

Regulation 20
Loading of passenger ships

1 On completion of loading of the ship and prior to its departure, the master shall determine the ship's trim and stability and also ascertain and record that the ship is in compliance with stability criteria in relevant regulations. The determination of the ship's stability shall always be made by calculation. The Administration may accept the use of an electronic loading and stability computer or equivalent means for this purpose.

---

* Refer to the Guidelines for damage control plans (MSC/Circ.919).

** Refer to the guidelines to be developed by the Organization.

2 Water ballast should not in general be carried in tanks intended for oil fuel. In ships in which it is not practicable to avoid putting water in oil fuel tanks, oily-water separating equipment to the satisfaction of the Administration shall be fitted, or other alternative means, such as discharge to shore facilities, acceptable to the Administration shall be provided for disposing of the oily-water ballast.

3 The provisions of this regulation are without prejudice to the provisions of the International Convention for the Prevention of Pollution from Ships in force.

Regulation 21
Periodical operation and inspection of watertight doors, etc., in passenger ships

1 Drills for the operating of watertight doors, sidescuttles, valves and closing mechanisms of scuppers, ash-chutes and rubbish-chutes shall take place weekly. In ships in which the voyage exceeds one week in duration a complete drill shall be held before leaving port, and others thereafter at least once a week during the voyage.

2 All watertight doors, both hinged and power operated, in watertight bulkheads, in use at sea, shall be operated daily.

3 The watertight doors and all mechanisms and indicators connected therewith, all valves, the closing of which is necessary to make a compartment watertight, and all valves the operation of which is necessary for damage control cross connections shall be periodically inspected at sea at least once a week.

4 A record of all drills and inspections required by this regulation shall be entered in the log-book with an explicit record of any defects which may be disclosed.

Regulation 22
Prevention and control of water ingress, etc.

1 All watertight doors shall be kept closed during navigation except that they may be opened during navigation as specified in paragraphs 3 and 4. Watertight doors of a width of more than 1.2 m in machinery spaces as permitted by regulation 13.10 may only be opened in the circumstances detailed in that regulation. Any door which is opened in accordance with this paragraph shall be ready to be immediately closed.

2 Watertight doors located below the bulkhead deck having a maximum clear opening width of more than 1.2 m shall be kept closed when the ship is at sea, except for limited periods when absolutely necessary as determined by the Administration.

3 A watertight door may be opened during navigation to permit the passage of passengers or crew, or when work in the immediate vicinity of the door necessitates it being opened. The door must be immediately closed when transit through the door is complete or when the task which necessitated it being open is finished.

4 Certain watertight doors may be permitted to remain open during navigation only if considered absolutely necessary; that is, being open is determined essential to the safe and effective operation of the ship's machinery or to permit passengers normally unrestricted access throughout the passenger area. Such determination shall be made by

the Administration only after careful consideration of the impact on ship operations and survivability. A watertight door permitted to remain thus open shall be clearly indicated in the ship's stability information and shall always be ready to be immediately closed.

5 Portable plates on bulkheads shall always be in place before the ship leaves port, and shall not be removed during navigation except in case of urgent necessity at the discretion of the master. The necessary precautions shall be taken in replacing them to ensure that the joints are watertight. Power-operated sliding watertight doors permitted in machinery spaces in accordance with regulation 13.10 shall be closed before the ship leaves port and shall remain closed during navigation except in case of urgent necessity at the discretion of the master.

6 Watertight doors fitted in watertight bulkheads dividing cargo between deck spaces in accordance with regulation 13.9.1 shall be closed before the voyage commences and shall be kept closed during navigation; the time of opening such doors in port and of closing them before the ship leaves port shall be entered in the log-book.

7 Gangway, cargo and fuelling ports fitted below the bulkhead deck shall be effectively closed and secured watertight before the ship leaves port, and shall be kept closed during navigation.

8 The following doors, located above the bulkhead deck, shall be closed and locked before the ship proceeds on any voyage and shall remain closed and locked until the ship is at its next berth:

.1 cargo loading doors in the shell or the boundaries of enclosed superstructures;

.2 bow visors fitted in positions as indicated in paragraph 8.1;

.3 cargo loading doors in the collision bulkhead; and

.4 ramps forming an alternative closure to those defined in paragraphs 8.1 to 8.3 inclusive.

9 Provided that where a door cannot be opened or closed while the ship is at the berth such a door may be opened or left open while the ship approaches or draws away from the berth, but only so far as may be necessary to enable the door to be immediately operated. In any case, the inner bow door must be kept closed.

10 Notwithstanding the requirements of paragraphs 8.1 and 8.4, the Administration may authorize that particular doors can be opened at the discretion of the master, if necessary for the operation of the ship or the embarking and disembarking of passengers when the ship is at safe anchorage and provided that the safety of the ship is not impaired.

11 The master shall ensure that an effective system of supervision and reporting of the closing and opening of the doors referred to in paragraph 8 is implemented.

12 The master shall ensure, before the ship proceeds on any voyage, that an entry in the log-book is made of the time of the last closing of the doors specified in paragraph 13 and the time of any opening of particular doors in accordance with paragraph 14.

13 Hinged doors, portable plates, sidescuttles, gangway, cargo and bunkering ports and other openings, which are required by these regulations to be kept closed during navigation, shall be closed before the ship leaves port. The time of closing and the time of opening (if permissible under these regulations) shall be recorded in such log-book as may be prescribed by the Administration.

14 Where in a between-decks, the sills of any of the sidescuttles referred to in regulation 15.3.2 are below a line drawn parallel to the bulkhead deck at side and having its lowest point 1.4 m plus 2.5% of the breadth of the ship above the water when the ship departs from any port, all the sidescuttles in that between-decks shall be closed watertight and locked before the ship leaves port, and they shall not be opened before the ship arrives at the next port. In the application of this paragraph the appropriate allowance for fresh water may be made when applicable.

.1 The time of opening such sidescuttles in port and of closing and locking them before the ship leaves port shall be entered in such log-book as may be prescribed by the Administration.

.2 For any ship that has one or more sidescuttles so placed that the requirements of paragraph 14 would apply when it was floating at its deepest subdivision draught, the Administration may indicate the limiting mean draught at which these sidescuttles will have their sills above the line drawn parallel to the bulkhead deck at side, and having its lowest point 1.4 m plus 2.5% of the breadth of the ship above the waterline corresponding to the limiting mean draught, and at which it will therefore be permissible to depart from port without previously closing and locking them and to open them at sea on the responsibility of the master during the voyage to the next port. In tropical zones as defined in the International Convention on Load Lines in force, this limiting draught may be increased by 0.3 m.

15 Sidescuttles and their deadlights which will not be accessible during navigation shall be closed and secured before the ship leaves port.

16 If cargo is carried in spaces referred to in regulation 15.5.2, the sidescuttles and their deadlights shall be closed watertight and locked before the cargo is shipped and such closing and locking shall be recorded in such log-book as may be prescribed by the Administration.

17 When a rubbish-chute, etc., is not in use, both the cover and the valve required by regulation 15.10.2 shall be kept closed and secured.

Regulation 22-1*
Flooding detection systems for passenger ships carrying 36 or more persons constructed on or after 1 July 2010

A flooding detection system for watertight spaces below the bulkhead deck shall be provided based on the guidelines developed by the Organization.*

Regulation 23
Special requirements for ro-ro passenger ships

1 Special category spaces and ro-ro spaces shall be continuously patrolled or monitored by effective means, such as television surveillance, so that any movement of vehicles in adverse weather conditions and unauthorized access by passengers thereto can be detected whilst the ship is underway.

2 Documented operating procedures for closing and securing all shell doors, loading doors and other closing appliances which, if left open or not properly secured, could, in the opinion of the Administration, lead to flooding of a special category space or ro-ro space, shall be kept on board and posted at an appropriate place.

3 All accesses from the ro-ro deck and vehicle ramps that lead to spaces below the bulkhead deck shall be closed before the ship leaves the berth on any voyage and shall remain closed until the ship is at its next berth.

4 The master shall ensure that an effective system of supervision and reporting of the closing and opening of such accesses referred to in paragraph 3 is implemented.

5 The master shall ensure, before the ship leaves the berth on any voyage, that an entry in the log-book, as required by regulation 22.13, is made of the time of the last closing of the accesses referred to in paragraph 3.

6 Notwithstanding the requirements of paragraph 3, the Administration may permit some accesses to be opened during the voyage, but only for a period sufficient to permit through passage and, if required, for the essential working of the ship.

7 All transverse or longitudinal bulkheads which are taken into account as effective to confine the seawater accumulated on the ro-ro deck shall be in place and secured before the ship leaves the berth and remain in place and secured until the ship is at its next berth.

8 Notwithstanding the requirements of paragraph 7, the Administration may permit some accesses within such bulkheads to be opened during the voyage but only for sufficient time to permit through passage and, if required, for the essential working of the ship.

* Refer to the guidelines to be developed by the Organization.

9 In all ro-ro passenger ships, the master or the designated officer shall ensure that, without the expressed consent of the master or the designated officer, no passengers are allowed access to an enclosed ro-ro deck when the ship is under way.

Regulation 24
Prevention and control of water ingress, etc., in cargo ships

1 Openings in the shell plating below the deck limiting the vertical extent of damage shall be kept permanently closed while at sea.

2 Notwithstanding the requirements of paragraph 3, the Administration may authorize that particular doors may be opened at the discretion of the master, if necessary for the operation of the ship and provided that the safety of the ship is not impaired.

3 Watertight doors or ramps fitted internally to subdivide large cargo spaces shall be closed before the voyage commences and shall be kept closed during navigation; the time of opening such doors in port and of closing them before the ship leaves port shall be entered in the log-book.

4 The use of access doors and hatch covers intended to ensure the watertight integrity of internal openings shall be authorized by the officer of the watch.

Regulation 25
Water level detectors on single hold cargo ships other than bulk carriers

1 Single hold cargo ships other than bulk carriers constructed before 1 January 2007 shall comply with the requirements of this regulation not later than 31 December 2009.

2 Ships having a length (L) of less than 80 m, or 100 m if constructed before 1 July 1998, and a single cargo hold below the freeboard deck or cargo holds below the freeboard deck which are not separated by at least one bulkhead made watertight up to that deck, shall be fitted in such space or spaces with water level detectors*.

3 The water level detectors required by paragraph 2 shall:

.1 give an audible and visual alarm at the navigation bridge when the water level above the inner bottom in the cargo hold reaches a height of not less than 0.3 m, and another when such level reaches not more than 15% of the mean depth of the cargo hold; and

.2 be fitted at the aft end of the hold, or above its lowest part where the inner bottom is not parallel to the designed waterline. Where webs or partial watertight bulkheads are fitted above the inner bottom, Administrations may require the fitting of additional detectors.

---

* Refer to the Performance standards for water level detectors on bulk carriers and single hold cargo ships other than bulk carriers, adopted by the Maritime Safety Committee by resolution MSC.188(79).

4 The water level detectors required by paragraph 2 need not be fitted in ships complying with regulation XII/12, or in ships having watertight side compartments each side of the cargo hold length extending vertically at least from inner bottom to freeboard deck."

ANNEX 3

AMENDMENTS TO THE INTERNATIONAL CONVENTION FOR THE SAFETY OF LIFE AT SEA, 1974, AS AMENDED

CHAPTER II-1
CONSTRUCTION – STRUCTURE, SUBDIVISION AND STABILITY, MACHINERY AND ELECTRICAL INSTALLATIONS

PART D
ELECTRICAL INSTALLATIONS

Regulation 41 – Main source of electrical power and lighting systems

1 The following new paragraph 6 is added after the existing paragraph 5:

"6 In passenger ships, supplementary lighting shall be provided in all cabins to clearly indicate the exit so that occupants will be able to find their way to the door. Such lighting, which may be connected to an emergency source of power or have a self-contained source of electrical power in each cabin, shall automatically illuminate when power to the normal cabin lighting is lost and remain on for a minimum of 30 min."

2 The following new part F is added after the existing regulation 54:

"PART F
ALTERNATIVE DESIGN AND ARRANGEMENTS

Regulation 55
Alternative design and arrangements

1 Purpose

The purpose of this regulation is to provide a methodology for alternative design and arrangements for machinery and electrical installations.

2 General

2.1 Machinery and electrical installation design and arrangements may deviate from the requirements set out in parts C, D and E, provided that the alternative design and arrangements meet the intent of the requirements concerned and provide an equivalent level of safety to this chapter.

2.2 When alternative design or arrangements deviate from the prescriptive requirements of parts C, D and E, an engineering analysis, evaluation and approval of the design and arrangements shall be carried out in accordance with this regulation.

3 Engineering analysis

The engineering analysis shall be prepared and submitted to the Administration, based on the guidelines developed by the Organization* and shall include, as a minimum, the following elements:

.1 determination of the ship type, machinery, electrical installations and space(s) concerned;

.2 identification of the prescriptive requirement(s) with which the machinery and electrical installations will not comply;

.3 identification of the reason the proposed design will not meet the prescriptive requirements supported by compliance with other recognized engineering or industry standards;

.4 determination of the performance criteria for the ship, machinery, electrical installation or the space(s) concerned addressed by the relevant prescriptive requirement(s):

.1 performance criteria shall provide a level of safety not inferior to the relevant prescriptive requirements contained in parts C, D and E; and

.2 performance criteria shall be quantifiable and measurable;

.5 detailed description of the alternative design and arrangements, including a list of the assumptions used in the design and any proposed operational restrictions or conditions;

.6 technical justification demonstrating that the alternative design and arrangements meet the safety performance criteria; and

.7 risk assessment based on identification of the potential faults and hazards associated with the proposal.

4 Evaluation of the alternative design and arrangements

4.1 The engineering analysis required in paragraph 3 shall be evaluated and approved by the Administration, taking into account the guidelines developed by the Organization.*

4.2 A copy of the documentation, as approved by the Administration, indicating that the alternative design and arrangements comply with this regulation, shall be carried on board the ship.

---

* Refer to the Guidelines on alternative design and arrangements for SOLAS chapters II-1 and III (MSC.1/Circ.1212).

5 Exchange of information

The Administration shall communicate to the Organization pertinent information concerning alternative design and arrangements approved by them for circulation to all Contracting Governments.

6 Re-evaluation due to change of conditions

If the assumptions and operational restrictions that were stipulated in the alternative design and arrangements are changed, the engineering analysis shall be carried out under the changed condition and shall be approved by the Administration."

CHAPTER II-2
CONSTRUCTION – FIRE PROTECTION, FIRE DETECTION AND FIRE EXTINCTION

Regulation 3 – Definitions

3 The following new paragraphs 51 and 52 are added after the existing paragraph 50:

"51 *Safe area in the context of a casualty* is, from the perspective of habitability, any area(s) which is not flooded or which is outside the main vertical zone(s) in which a fire has occurred such that it can safely accommodate all persons onboard to protect them from hazards to life or health and provide them with basic services.

52 *Safety centre* is a control station dedicated to the management of emergency situations. Safety systems' operation, control and/or monitoring are an integral part of the safety centre."

Regulation 7 – Detection and alarm

4 The following new paragraph 2.4 is added after the existing paragraph 2.3:

"2.4 A fixed fire detection and fire alarm system for passenger ships shall be capable of remotely and individually identifying each detector and manually operated call point."

5 In paragraphs 5.2 and 5.3.1, the following new text is added at the end of the paragraphs:

"Detectors fitted in cabins, when activated, shall also be capable of emitting, or cause to be emitted, an audible alarm within the space where they are located."

Regulation 8 – Control of smoke spread

6 In paragraph 2, the following new sentence is added at the end of the paragraph:

"The ventilation system serving safety centres may be derived from the ventilation system serving the navigation bridge, unless located in an adjacent main vertical zone."

Regulation 9 – Containment of fire

7 In paragraph 2.2.3.2.2 (7), the words "Sale shops" are deleted.

8 In paragraph 2.2.3.2.2 (8), the words "Sale shops" are added.

9 In the notes for tables 9.3 and 9.4, the following sentence is added at the end of subscript "c":

"No fire rating is required for those partitions separating the navigation bridge and the safety centre when the latter is within the navigation bridge."

10 The following new paragraph 2.2.7 is added after paragraph 2.2.6:

"2.2.7 *Protection of atriums*

2.2.7.1 Atriums shall be within enclosures formed of "A" class divisions having a fire rating determined in accordance with tables 9.2 and 9.4, as applicable.

2.2.7.2 Decks separating spaces within atriums shall have a fire rating determined in accordance with tables 9.2 and 9.4, as applicable."

11 The existing paragraph 7.5.1 is renumbered as paragraph 7.5.1.1 and the following new paragraph 7.5.1.2 is added thereafter:

"7.5.1.2 Exhaust ducts from ranges for cooking equipment installed on open decks shall conform to paragraph 7.5.1.1, as applicable, when passing through accommodation spaces or spaces containing combustible materials."

12 The following new paragraph 7.6 is added after the existing paragraph 7.5.2.1:

"7.6 *Ventilation systems for main laundries in ships carrying more than 36 passengers*

Exhaust ducts from main laundries shall be fitted with:

.1 filters readily removable for cleaning purposes;

.2 a fire damper located in the lower end of the duct which is automatically and remotely operated;

.3 remote-control arrangements for shutting off the exhaust fans and supply fans from within the space and for operating the fire damper mentioned in paragraph 7.6.2; and

.4 suitably located hatches for inspection and cleaning."

Regulation 10 – Fire fighting

13 In the first sentence of paragraph 6.4, between the words "equipment" and "shall", the words "installed in enclosed spaces or on open decks" are added.

Regulation 13 – Means of escape

14 In paragraph 3.2.3, the words "public spaces" in the third sentence are deleted and the following new sentence is added before the fourth sentence:

"Public spaces may also have direct access to stairway enclosures except for the backstage of a theatre."

15 The following new paragraph 3.2.5.3 is added after the existing paragraph 3.2.5.2:

"3.2.5.3 In lieu of the escape route lighting system required by paragraph 3.2.5.1, alternative evacuation guidance systems may be accepted if approved by the Administration based on the guidelines developed by the Organization*."

* Refer to the Functional requirements and performance standards for the assessment of evacuation guidance systems (MSC/Circ.1167) and the Interim guidelines for the testing, approval and maintenance of evacuation guidance systems used as an alternative to low-location lighting systems (MSC/Circ.1168).

16 The following new regulations 21, 22 and 23 are added after the existing regulation 20:

"**Regulation 21**
Casualty threshold, safe return to port and safe areas

1 Application

Passenger ships constructed on or after 1 July 2010 having length, as defined in regulation II-1/2.5, of 120 m or more or having three or more main vertical zones shall comply with the provisions of this regulation.

2 Purpose

The purpose of this regulation is to establish design criteria for a ship's safe return to port under its own propulsion after a casualty that does not exceed the casualty threshold stipulated in paragraph 3 and also provides functional requirements and performance standards for safe areas.

3 Casualty threshold

The casualty threshold, in the context of a fire, includes:

.1 loss of space of origin up to the nearest "A" class boundaries, which may be a part of the space of origin, if the space of origin is protected by a fixed fire extinguishing system; or

.2 loss of the space of origin and adjacent spaces up to the nearest "A" class boundaries, which are not part of the space of origin.

4 Safe return to port*

When fire damage does not exceed the casualty threshold indicated in paragraph 3, the ship shall be capable of returning to port while providing a safe area as defined in regulation 3. To be deemed capable of returning to port, the following systems shall remain operational in the remaining part of the ship not affected by fire:

.1 propulsion;

.2 steering systems and steering-control systems;

.3 navigational systems;

.4 systems for fill, transfer and service of fuel oil;

.5 internal communication between the bridge, engineering spaces, safety centre, fire-fighting and damage control teams, and as required for passenger and crew notification and mustering;

.6 external communication;

.7 fire main system;

.8 fixed fire-extinguishing systems;

.9 fire and smoke detection system;

.10 bilge and ballast system;

.11 power-operated watertight and semi-watertight doors;

.12 systems intended to support "safe areas" as indicated in paragraph 5.1.2;

.13 flooding detection systems; and

.14 other systems determined by the Administration to be vital to damage control efforts.

5 Safe area(s)

5.1 *Functional requirements:*

.1 the safe area(s) shall generally be internal space(s); however, the use of an external space as a safe area may be allowed by the Administration taking into account any restriction due to the area of operation and relevant expected environmental conditions;

---

* Refer to the Performance standards for the systems and services to remain operational on passenger ships for safe return to port and orderly evacuation and abandonment after a casualty (MSC.1/Circ.1214).

.2 the safe area(s) shall provide all occupants with the following basic services* to ensure that the health of passengers and crew is maintained:

.1 sanitation;

.2 water;

.3 food;

.4 alternate space for medical care;

.5 shelter from the weather;

.6 means of preventing heat stress and hypothermia;

.7 light; and

.8 ventilation;

.3 ventilation design shall reduce the risk that smoke and hot gases could affect the use of the safe area(s); and

.4 means of access to life-saving appliances shall be provided from each area identified or used as a safe area, taking into account that a main vertical zone may not be available for internal transit.

5.2 ***Alternate space for medical care***

Alternate space for medical care shall conform to a standard acceptable to the Administration.**

Regulation 22
Design criteria for systems to remain operational after a fire casualty

1 Application

Passenger ships constructed on or after 1 July 2010 having length, as defined in regulation II-1/2.2, of 120 m or more or having three or more main vertical zones shall comply with the provisions of this regulation.

---

* Refer to the Performance standards for the systems and services to remain operational on passenger ships for safe return to port and orderly evacuation and abandonment after a casualty (MSC.1/Circ.1214).

** Refer to the Guidance on the establishment of medical and sanitation related programmes for passenger ships (MSC/Circ.1129).

2 Purpose

The purpose of this regulation is to provide design criteria for systems required to remain operational for supporting the orderly evacuation and abandonment of a ship, if the casualty threshold, as defined in regulation 21.3, is exceeded.

3 Systems*

3.1 In case any one main vertical zone is unserviceable due to fire, the following systems shall be so arranged and segregated as to remain operational:

.1 fire main;

.2 internal communications (in support of fire-fighting as required for passenger and crew notification and evacuation);

.3 means of external communications;

.4 bilge systems for removal of fire-fighting water;

.5 lighting along escape routes, at assembly stations and at embarkation stations of life-saving appliances; and

.6 guidance systems for evacuation shall be available.

3.2 The above systems shall be capable of operation for at least 3 h based on the assumption of no damage outside the unserviceable main vertical zone. These systems are not required to remain operational within the unserviceable main vertical zones.

3.3 Cabling and piping within a trunk constructed to an "A-60" standard shall be deemed to remain intact and serviceable while passing through the unserviceable main vertical zone for the purposes of paragraph 3.1. An equivalent degree of protection for cabling and piping may be approved by the Administration.

Regulation 23
Safety centre on passenger ships

1 Application

Passenger ships constructed on or after 1 July 2010 shall have on board a safety centre complying with the requirements of this regulation.

2 Purpose

The purpose of this regulation is to provide a space to assist with the management of emergency situations.

---

* Refer to the Performance standards for the systems and services to remain operational on passenger ships for safe return to port and orderly evacuation and abandonment after a casualty (MSC.1/Circ.1214).

3 Location and arrangement

The safety centre shall either be a part of the navigation bridge or be located in a separate space adjacent to and having direct access to the navigation bridge, so that the management of emergencies can be performed without distracting watch officers from their navigational duties.

4 Layout and ergonomic design

The layout and ergonomic design of the safety centre shall take into account the guidelines developed by the Organization*, as appropriate.

5 Communications

Means of communication between the safety centre, the central control station, the navigation bridge, the engine control room, the storage room(s) for fire extinguishing system(s) and fire equipment lockers shall be provided.

6 Control and monitoring of safety systems

Notwithstanding the requirements set out elsewhere in the Convention, the full functionality (operation, control, monitoring or any combination thereof, as required) of the safety systems listed below shall be available from the safety centre:

.1 all powered ventilation systems;

.2 fire doors;

.3 general emergency alarm system;

.4 public address system;

.5 electrically powered evacuation guidance systems;

.6 watertight and semi-watertight doors;

.7 indicators for shell doors, loading doors and other closing appliances;

.8 water leakage of inner/outer bow doors, stern doors and any other shell door;

.9 television surveillance system;

.10 fire detection and alarm system;

.11 fixed fire-fighting local application system(s);

* Refer to guidelines to be developed by the Organization.

.12 sprinkler and equivalent systems;

.13 water-based systems for machinery spaces;

.14 alarm to summon the crew;

.15 atrium smoke extraction system;

.16 flooding detection systems; and

.17 fire pumps and emergency fire pumps."

CHAPTER III
LIFE-SAVING APPLIANCES AND ARRANGEMENTS

Regulation 4 – Evaluation, testing and approval of life-saving appliances and arrangements

17 Paragraph 3 is replaced by the following:

"3 Before giving approval to novel life-saving appliances or arrangements, the Administration shall ensure that such:

.1 appliances provide safety standards at least equivalent to the requirements of this chapter and the Code and have been evaluated and tested based on the guidelines developed by the Organization*; or

.2 arrangements have successfully undergone an engineering analysis, evaluation and approval in accordance with regulation 38."

* Refer to the guidelines to be developed by the Organization.

18 The following new part C is added after the existing regulation 37:

"PART C
ALTERNATIVE DESIGN AND ARRANGEMENTS

Regulation 38
Alternative design and arrangements

1 Purpose

The purpose of this regulation is to provide a methodology for alternative design and arrangements for life-saving appliances and arrangements.

2 General

2.1 Life-saving appliances and arrangements may deviate from the requirements set out in part B, provided that the alternative design and arrangements meet the intent of the requirements concerned and provide an equivalent level of safety to this chapter.

2.2 When alternative design or arrangements deviate from the prescriptive requirements of part B, an engineering analysis, evaluation and approval of the design and arrangements shall be carried out in accordance with this regulation.

3 Engineering analysis

The engineering analysis shall be prepared and submitted to the Administration, based on the guidelines developed by the Organization* and shall include, as a minimum, the following elements:

.1 determination of the ship type and the life-saving appliance and arrangements concerned;

.2 identification of the prescriptive requirement(s) with which the life-saving appliance and arrangements will not comply;

.3 identification of the reason the proposed design will not meet the prescriptive requirements supported by compliance with other recognized engineering or industry standards;

.4 determination of the performance criteria for the ship and the life-saving appliance and arrangements concerned addressed by the relevant prescriptive requirement(s):

.4.1 performance criteria shall provide a level of safety not inferior to the relevant prescriptive requirements contained in part B; and

.4.2 performance criteria shall be quantifiable and measurable;

.5 detailed description of the alternative design and arrangements, including a list of the assumptions used in the design and any proposed operational restrictions or conditions;

.6 technical justification demonstrating that the alternative design and arrangements meet the safety performance criteria; and

.7 risk assessment based on identification of the potential faults and hazards associated with the proposal.

---

* Refer to the Guidelines on alternative design and arrangements for SOLAS chapters II-1 and III (MSC.1/Circ.1212).

4 Evaluation of the alternative design and arrangements

4.1 The engineering analysis required in paragraph 3 shall be evaluated and approved by the Administration, taking into account the guidelines developed by the Organization.*

4.2 A copy of the documentation, as approved by the Administration, indicating that the alternative design and arrangements comply with this regulation, shall be carried on board the ship.

5 Exchange of information

The Administration shall communicate to the Organization pertinent information concerning alternative design and arrangements approved by them for circulation to all Contracting Governments.

6 Re-evaluation due to change of conditions

If the assumptions and operational restrictions that were stipulated in the alternative design and arrangements are changed, the engineering analysis shall be carried out under the changed condition and shall be approved by the Administration."

***

* Refer to the Guidelines on alternative design and arrangements for SOLAS chapters II-1 and III (MSC.1/Circ.1212).

ANNEX 3

RESOLUTION MSC.217(82)

(adopted on 8 December 2006)

ADOPTION OF AMENDMENTS TO THE INTERNATIONAL CODE FOR FIRE SAFETY SYSTEMS

THE MARITIME SAFETY COMMITTEE,

RECALLING Article 28(b) of the Convention on the International Maritime Organization concerning the functions of the Committee,

NOTING resolution MSC.98(73) by which it adopted the International Code for Fire Safety Systems (hereinafter referred to as "the FSS Code"), which has become mandatory under chapter II-2 of the International Convention for the Safety of Life at Sea, 1974 (hereinafter referred to as "the Convention"),

NOTING ALSO article VIII(b) and regulation II-2/3.22 of the Convention concerning the procedure for amending the FSS Code,

HAVING CONSIDERED, at its eighty-second session, amendments to the FSS Code, proposed and circulated in accordance with article VIII(b)(i) of the Convention,

1. ADOPTS, in accordance with article VIII(b)(iv) of the Convention, amendments to the International Code for Fire Safety Systems, the text of which is set out in Annexes 1 and 2 to the present resolution;

2. DETERMINES, in accordance with article VIII(b)(vi)(2)(bb) of the Convention, that:

(a) the said amendments, set out in Annex 1, shall be deemed to have been accepted on 1 January 2008; and

(b) the said amendments, set out in Annex 2, shall be deemed to have been accepted on 1 January 2010,

unless, prior to that date, more than one third of the Contracting Governments to the Convention or Contracting Governments the combined merchant fleets of which constitute not less than 50% of the gross tonnage of the world's merchant fleet, have notified their objections to the amendments;

3. INVITES SOLAS Contracting Governments to note that, in accordance with article VIII(b)(vii)(2) of the Convention:

(a) the amendments, set out in Annex 1, shall enter into force on 1 July 2008; and

(b) the amendments, set out in Annex 2, shall enter into force on 1 July 2010,

upon their acceptance in accordance with paragraph 2 above;

4. REQUESTS the Secretary-General, in conformity with article VIII(b)(v) of the Convention, to transmit certified copies of the present resolution and the text of the amendments contained in Annexes 1 and 2 to all Contracting Governments to the Convention;

5. FURTHER REQUESTS the Secretary-General to transmit copies of this resolution and its Annexes 1 and 2 to Members of the Organization, which are not Contracting Governments to the Convention.

ANNEX 1

AMENDMENTS TO THE INTERNATIONAL CODE FOR FIRE SAFETY SYSTEMS

CHAPTER 4
FIRE EXTINGUISHERS

Section 3 – Engineering specifications

1 The existing text of paragraph 3.2 is replaced by the following:

"3.2 *Portable foam applicators*

3.2.1 A portable foam applicator unit shall consist of a foam nozzle/branch pipe, either of a self-inducing type or in combination with a separate inductor, capable of being connected to the fire main by a fire hose, together with a portable tank containing at least 20 *l* of foam concentrate and at least one spare tank of foam concentrate of the same capacity.

3.2.2 System performance

3.2.2.1 The nozzle/branch pipe and inductor shall be capable of producing effective foam suitable for extinguishing an oil fire, at a foam solution flow rate of at least 200 *l*/min at the nominal pressure in the fire main.

3.2.2.2 The foam concentrate shall be approved by the Administration based on guidelines developed by the Organization*.

3.2.2.3 The values of the foam expansion and drainage time of the foam produced by the portable foam applicator unit shall not differ more than ± 10% of that determined in 3.2.2.2.

3.2.2.4 The portable foam applicator unit shall be designed to withstand clogging, ambient temperature changes, vibration, humidity, shock, impact and corrosion normally encountered on ships."

* Refer to the Guidelines for the performance and testing criteria and surveys of low-expansion foam concentrates for fixed fire-extinguishing systems (MSC/Circ.582/Corr.1).

CHAPTER 6
FIXED FOAM FIRE-EXTINGUISHING SYSTEMS

Section 2 – Engineering specifications

2 The existing text of paragraph 2.3.1.2 is replaced by the following:

"2.3.1.2 The system shall be capable of discharging through fixed discharge outlets in no more than 5 min, a quantity of foam sufficient to produce an effective foam blanket over the largest single area over which oil fuel is liable to spread."

CHAPTER 7
FIXED PRESSURE WATER-SPRAYING AND WATER-MIST FIRE-EXTINGUISHING SYSTEMS

Section 2 – Engineering specifications

3 The existing section 2 is replaced by the following:

"2.1 *Fixed pressure water-spraying fire-extinguishing systems*

Fixed-pressure water-spraying fire-extinguishing systems for machinery spaces and cargo pump-rooms shall be approved by the Administration based on the guidelines developed by the Organization*.

2.2 *Equivalent water-mist fire-extinguishing systems*

Water-mist fire-extinguishing systems for machinery spaces and cargo pump-rooms shall be approved by the Administration based on the guidelines developed by the Organization*."

* Refer to the Revised Guidelines for the approval of equivalent water-based fire-extinguishing systems for machinery spaces and cargo pump-rooms (MSC/Circ.1165).

4 The following new paragraph 2.3 is added after the existing paragraph 2.2:

"2.3 *Fixed pressure water-spraying fire-extinguishing systems for cabin balconies*

Fixed pressure water-spraying fire-extinguishing systems for cabin balconies shall be approved by the Administration based on the guidelines developed by the Organization.*"

* Refer to the guidelines to be developed by the Organization.

CHAPTER 9
FIXED FIRE DETECTION AND FIRE ALARM SYSTEMS

5 The following new paragraph 2.6 is added after the existing paragraph 2.5.2:

"2.6 *Fixed fire detection and fire alarm systems for cabin balconies*

Fixed fire detection and fire alarm systems for cabin balconies shall be approved by the Administration based on the guidelines developed by the Organization.*"

* Refer to the guidelines to be developed by the Organization.

ANNEX 2

AMENDMENTS TO THE INTERNATIONAL CODE FOR FIRE SAFETY SYSTEMS

CHAPTER 9
FIXED FIRE DETECTION AND FIRE ALARM SYSTEMS

1 The following new paragraph 2.1.5 is added after the existing paragraph 2.1.4:

"2.1.5 In passenger ships, the fixed fire detection and fire alarm system shall be capable of remotely and individually identifying each detector and manually operated call point."

2 The existing text of paragraph 2.4.1.4 is replaced by the following:

"2.4.1.4 A section of fire detectors and manually operated call points shall not be situated in more than one main vertical zone."

***

ANNEX 4

RESOLUTION MSC.218(82)

(adopted on 8 December 2006)

ADOPTION OF AMENDMENTS TO THE INTERNATIONAL LIFE-SAVING APPLIANCE (LSA) CODE

THE MARITIME SAFETY COMMITTEE,

RECALLING Article 28(b) of the Convention on the International Maritime Organization concerning the functions of the Committee,

NOTING resolution MSC.48(66), by which it adopted the International Life-Saving Appliance (LSA) Code (hereinafter referred to as "the LSA Code"), which has become mandatory under chapter III of the International Convention for the Safety of Life at Sea, 1974 (hereinafter referred to as "the Convention"),

NOTING ALSO article VIII(b) and regulation III/3.10 of the Convention concerning the procedure for amending the LSA Code,

HAVING CONSIDERED, at its eighty-second session, amendments to the LSA Code, proposed and circulated in accordance with article VIII(b)(i) of the Convention,

1. ADOPTS, in accordance with article VIII(b)(iv) of the Convention, amendments to the International Life-Saving Appliance (LSA) Code, the text of which is set out in the Annex to the present resolution;

2. DETERMINES, in accordance with article VIII(b)(vi)(2)(bb) of the Convention, that the amendments shall be deemed to have been accepted on 1 January 2008, unless, prior to that date, more than one third of the Contracting Governments to the Convention or Contracting Governments the combined merchant fleets of which constitute not less than 50% of the gross tonnage of the world's merchant fleet, have notified their objections to the amendments;

3. INVITES Contracting Governments to note that, in accordance with article VIII(b)(vii)(2) of the Convention, the amendments shall enter into force on 1 July 2008 upon their acceptance in accordance with paragraph 2 above;

4. REQUESTS the Secretary-General, in conformity with article VIII(b)(v) of the Convention, to transmit certified copies of the present resolution and the text of the amendments contained in the Annex to all Contracting Governments to the Convention;

5. FURTHER REQUESTS the Secretary-General to transmit copies of this resolution and its Annex to Members of the Organization, which are not Contracting Governments to the Convention.

ANNEX

AMENDMENTS TO THE INTERNATIONAL LIFE-SAVING APPLIANCE (LSA) CODE

CHAPTER I
GENERAL

1.1 Definitions

1 Paragraph 1.1.8 is deleted and the existing paragraphs 1.1.9, 1.1.10 and 1.1.11 are renumbered as paragraphs 1.1.8, 1.1.9 and 1.1.10 respectively.

1.2 General requirements for life-saving appliances

2 The following sentence is added at the end of paragraph 1.2.3:

"In the case of pyrotechnic lifesaving appliances, the date of expiry shall be indelibly marked on the product by the manufacturer."

2.2 Lifejackets

3 In paragraph 2.2.1.16, the words "line or other" are inserted between the words "buoyant" and "means".

2.3 Immersion suits

4 Subparagraph .1 of paragraph 2.3.1.1 is replaced by the following:

".1 it can be unpacked and donned without assistance within 2 min, taking into account donning of any associated clothing, donning of a lifejacket if the immersion suit is to be worn in conjunction with a lifejacket, and inflation of orally inflatable chambers, if fitted;[*] "

[*] Refer to paragraph 3.1.3 of the Recommendation on testing of life-saving appliances, adopted by the Organization by resolution MSC.81(70).

5 In paragraph 2.3.1.5, the words "line or other" are inserted between the words "buoyant" and "means".

CHAPTER IV
SURVIVAL CRAFT

4.1 General requirements for liferafts

6 In paragraph 4.1.2.2, the words "required to be stowed in a position providing" are replaced by the word "intended".

7 The first sentence of paragraph 4.1.3.3 is replaced by the following:

"A manually controlled exterior light shall be fitted to the uppermost portion of the liferaft canopy or structure."

8 The first and second sentences of paragraph 4.1.3.4 are replaced by the following:

"A manually controlled interior light shall be fitted inside the liferaft capable of continuous operation for a period of at least 12 h. It shall light automatically when the canopy is erected and shall produce an arithmetic mean luminous intensity of not less than 0.5 cd when measured over the entire upper hemisphere to permit reading of survival and equipment instructions."

9 Subparagraphs .18 and .19 of paragraph 4.1.5.1 are replaced by the following:

".18 a food ration consisting of not less than 10,000 kJ (2,400 kcal) for each person the liferaft is permitted to accommodate. These rations shall be palatable, edible throughout the marked life, and packed in a manner which can be readily divided and easily opened, taking into account immersion suit gloved hands.*

The rations shall be packed in permanently sealed metal containers or vacuum packed in a flexible packaging material with a negligible vapour transmission rate (<0.1 g/m^2 per 24 hours at 23ºC/85% relative humidity when tested to a standard acceptable to the Administration. Flexible packaging materials shall be further protected by outer packaging if needed to prevent physical damage to the food ration and other items as result of sharp edges. The packaging shall be clearly marked with date of packing and date of expiry, the production lot number, the content in the package and instructions for use. Food rations complying with the requirements of an international standard acceptable to the Organization** are acceptable in compliance with these requirements;

---

* **Note**: A typical suitable composition is:

Ration unit: 500-550 g
Energy: Minimum 10,000 kJ
Moisture: Maximum 5%
Salt (NaCl): Maximum 0.2%
Carbohydrates: 60-70% weight = 50-60% energy
Fat: 18-23% weight = 33-43% energy
Protein: 6-10% weight = 5-8% energy

** Refer to the recommendations of the International Organization for Standardization, in particular publication ISO 18813:2006 *Ships and marine technology – Survival equipment for survival craft and rescue boats*.

.19 1.5 *l* of fresh water for each person the liferaft is permitted to accommodate, of which either 0.5 *l* per person may be replaced by a de-salting apparatus capable of producing an equal amount of fresh water in 2 days or 1 *l* per person may be replaced by a manually powered reverse osmosis desalinator, as described in paragraph 4.4.7.5, capable of producing an equal amount of fresh water in 2 days. The water shall satisfy suitable international requirements for chemical and microbiological content, and shall be packed in sealed watertight containers that

are of corrosion resistant material or are treated to be corrosion resistant. Flexible packaging materials, if used, shall have a negligible vapour transmission rate (<0.1 g/m^2 per 24 hours at 23ºC / 85% relative humidity when tested to a standard acceptable to the Administration, except that individually packaged portions within a larger container need not meet this vapour transmission requirement. Each water container shall have a method of spill proof reclosure, except for individually packaged portions of less than 125 ml. Each container shall be clearly marked with date of packing and date of expiry, the production lot number, the quantity of water in the container, and instructions for consumption. The containers shall be easy to open, taking into account immersion suit gloved hands. Water for emergency drinking complying with the requirements of an international standard acceptable to the Organization* is acceptable in compliance with these requirements;"

* Refer to the recommendations of the International Organization for Standardization, in particular publication ISO 18813:2006 *Ships and marine technology – Survival equipment for survival craft and rescue boats*.

4.2 Inflatable liferafts

10 The following new sentence is inserted between the second and third sentences of paragraph 4.2.2.3:

"The inflation system, including any relief valves installed in compliance with paragraph 4.2.2.4, shall comply with the requirements of an international standard acceptable to the Organization*."

* Refer to the recommendations of the International Organization for Standardization, in particular publication ISO 15738:2002 *Ships and marine technology – Gas inflation systems for inflatable life-saving appliances*.

11 The first sentence of paragraph 4.2.4.1 is replaced by the following:

"At least one entrance shall be fitted with a boarding ramp, capable of supporting a person weighing 100 kg sitting or kneeling and not holding onto any other part of the liferaft, to enable persons to board the liferaft from the sea."

12 The following new subparagraph .8 is inserted in paragraph 4.2.6.3 and the existing subparagraphs .8 and .9 are renumbered as subparagraphs .9 and .10 respectively:

".8 mass of the packed liferaft, if greater than 185 kg;"

4.3 Rigid liferafts

13 The first sentence of paragraph 4.3.4.1 is replaced by the following:

"At least one entrance shall be fitted with a boarding ramp, capable of supporting a person weighing 100 kg sitting or kneeling and not holding onto any other part of the liferaft, to enable persons to board the liferaft from the sea."

4.4 General requirements for lifeboats

14 In paragraph 4.4.1.1, the words “, and are capable of being safely launched under all conditions of trim of up to 10° and list of up to 20° either way” are added at the end of the first sentence.

15 Paragraph 4.4.1.2 is replaced by the following:

“4.4.1.2 Each lifeboat shall be fitted with a permanently affixed approval plate, endorsed by the Administration or its representative, containing at least the following items:

.1 manufacturer’s name and address;

.2 lifeboat model and serial number;

.3 month and year of manufacture;

.4 number of persons the lifeboat is approved to carry; and

.5 the approval information required under paragraph 1.2.2.9.

Each production lifeboat shall be provided with a certificate or declaration of conformity which, in addition to the above items, specifies:

.6 number of the certificate of approval;

.7 material of hull construction, in such detail as to ensure that compatibility problems in repair should not occur;

.8 total mass fully equipped and fully manned;

.9 the measured towing force of the lifeboat; and

.10 statement of approval as to sections 4.5, 4.6, 4.7, 4.8 or 4.9.”

16 In paragraph 4.4.3.1, in the first sentence, the word “rapidly” is deleted and the words “in not more than 10 min from the time the instruction to board is given” are added at the end.

17 In the first sentence of paragraph 4.4.6.8, the words “a 25 person liferaft” are replaced by the words “the largest liferaft carried on the ship”.

18 Paragraph 4.4.7.6 is replaced by the following:

“4.4.7.6 Every lifeboat to be launched by a fall or falls, except a free-fall lifeboat, shall be fitted with a release mechanism complying with the following requirements subject to subparagraph .9 below:

.1 the mechanism shall be so arranged that all hooks are released simultaneously;

.2 the mechanism shall have two release capabilities: normal (off-load) release capability and on-load release capability:

.2.1 normal (off-load) release capability shall release the lifeboat when it is waterborne or when there is no load on the hooks, and not require manual separation of the lifting ring or shackle from the jaw of the hook; and

.2.2 on-load release capability shall release the lifeboat with a load on the hooks. This release shall be so arranged as to release the lifeboat under any conditions of loading from no load with the lifeboat waterborne to a load of 1.1 times the total mass of the lifeboat when loaded with its full complement of persons and equipment. This release capability shall be adequately protected against accidental or premature use. Adequate protection shall include special mechanical protection not normally required for off-load release, in addition to a danger sign. To prevent a premature on-load release, on-load operation of the release mechanism should require a deliberate and sustained action by the operator;

.3 to prevent an accidental release during recovery of the boat, unless the hook is completely reset, either the hook shall not be able to support any load, or the handle or safety pins shall not be able to be returned to the reset (closed) position without excessive force. Additional danger signs shall be posted at each hook station to alert crew members to the proper method of resetting;

.4 the release mechanism shall be so designed and installed that crew members from inside the lifeboat can clearly determine when the system is ready for lifting by:

.4.1 directly observing that the movable hook portion or the hook portion that locks the movable hook portion in place is properly and completely reset at each hook; or

.4.2 observing a non-adjustable indicator that confirms that the mechanism that locks the movable hook portion in place is properly and completely reset at each hook; or

.4.3 easily operating a mechanical indicator that confirms that the mechanism that locks the movable hook in place is properly and completely reset at each hook;

.5 clear operating instructions shall be provided with a suitably worded warning notice using colour coding, pictograms, and/or symbols as necessary for clarity. If colour coding is used, green shall indicate a properly reset hook and red shall indicate danger of improper or incorrect setting;

.6 the release control shall be clearly marked in a colour that contrasts with its surroundings;

.7 means shall be provided for hanging-off the lifeboat to free the release mechanism for maintenance;

.8 the fixed structural connections of the release mechanism in the lifeboat shall be designed with a calculated factor of safety of 6 based on the ultimate strength of the materials used, and the mass of the lifeboat when loaded with its full complement of persons, fuel and equipment, assuming the mass of the lifeboat is equally distributed between the falls, except that the factor of safety for the hanging-off arrangement may be based upon the mass of the lifeboat when loaded with its full complement of fuel and equipment plus 1,000 kg; and

.9 where a single fall and hook system is used for launching a lifeboat or rescue boat in combination with a suitable painter, the requirements of paragraphs 4.4.7.6.2.2 and 4.4.7.6.3 need not be applicable; in such an arrangement a single capability to release the lifeboat or rescue boat, only when it is fully waterborne, will be adequate."

19 In the first sentence of paragraph 4.4.7.11, the word "lamp" is replaced by the word "exterior light".

20 The existing text of paragraph 4.4.7.12 is replaced by the following:

"4.4.7.12 A manually controlled interior light shall be fitted inside the lifeboat capable of continuous operation for a period of at least 12 h. It shall produce an arithmetic mean luminous intensity of not less than 0.5 cd when measured over the entire upper hemisphere to permit reading of survival and equipment instructions; however, oil lamps shall not be permitted for this purpose."

21 In paragraph 4.4.8.9, the words "as described in paragraph 4.1.5.1.19" are inserted between the words "fresh water" and "for each person".

4.5 Partially enclosed lifeboats

22 Paragraph 4.5.3 is replaced by the following:

"4.5.3 The interior of the lifeboat shall be of a light colour which does not cause discomfort to the occupants."

4.6 Totally enclosed lifeboats

23 In paragraph 4.6.2.8, the word "light" is inserted before the second word "colour".

4.7 Free-fall lifeboats

24 Paragraph 4.7.3.3 is deleted.

CHAPTER V
RESCUE BOATS

5.1 Rescue boats

25 In the first sentence of paragraph 5.1.1.1, the words ", excluding paragraph 4.4.6.8," are inserted between the words "4.4.7.4 inclusive" and "and 4.4.7.6" and the references to "4.4.7.6, 4.4.7.7, 4.4.7.9, 4.4.7.10" are replaced by the references to "4.4.7.6, 4.4.7.8, 4.4.7.10, 4.4.7.11".

26 At the end of the first sentence of paragraph 5.1.1.3.2, the words "all wearing immersion suits, and lifejackets if required" are added.

27 Paragraph 5.1.1.6 is replaced by the following:

"5.1.1.6 Every rescue boat shall be provided with sufficient fuel, suitable for use throughout the temperature range expected in the area in which the ship operates, and be capable of manoeuvring at a speed of at least 6 knots and maintaining that speed, for a period of at least 4 h, when loaded with its full complement of persons and equipment."

28 The following new paragraph 5.1.1.12 is added after the existing paragraph 5.1.1.11:

"5.1.1.12 Every rescue boat shall be so arranged that an adequate view forward, aft and to both sides is provided from the control and steering position for safe launching and manoeuvring and, in particular, with regard to visibility of areas and crew members essential to man-overboard retrieval and marshalling of survival craft."

29 Paragraph 5.1.3.11 is deleted.

30 The following new section 5.1.4 is added after existing section 5.1.3:

"5.1.4 *Additional requirements for fast rescue boats*

5.1.4.1 Fast rescue boats shall be so constructed as to capable of being safely launched and retrieved under adverse weather and sea conditions.

5.1.4.2 Except as provided by this section, all fast rescue boats shall comply with the requirements of section 5.1, except for paragraphs 4.4.1.5.3, 4.4.1.6, 4.4.7.2, 5.1.1.6 and 5.1.1.10.

5.1.4.3 Notwithstanding paragraph 5.1.1.3.1, fast rescue boats shall have a hull length of not less than 6 m and not more than 8.5 m, including inflated structures or fixed fenders.

5.1.4.4 Fast rescue boats shall be provided with sufficient fuel, suitable for use throughout the temperature range expected in the area in which the ship operates, and be capable of manoeuvring, for a period of at least 4 h, at a speed of at least 20 knots in calm water with a crew of 3 persons and at least 8 knots when loaded with its full complement of persons and equipment.

5.1.4.5 Fast rescue boats shall be self-righting or capable of being readily righted by not more than two of their crew.

5.1.4.6 Fast rescue boats shall be self-bailing or be capable of being rapidly cleared of water.

5.1.4.7 Fast rescue boats shall be steered by a wheel at the helmsman's position remote from the tiller. An emergency steering system providing direct control of the rudder, water jet, or outboard motor shall also be provided.

5.1.4.8 Engines in fast rescue boats shall stop automatically or be stopped by the helmsman's emergency release switch, should the rescue boat capsize. When the rescue boat has righted, each engine or motor shall be capable of being restarted provided that the helmsman's emergency release, if fitted, has been reset. The design of the fuel and lubricating systems shall prevent the loss of more than 250 ml of fuel or lubricating oil from the propulsion system, should the rescue boat capsize.

5.1.4.9 Fast rescue boats shall, if possible, be equipped with an easily and safely operated fixed single-point suspension arrangement or equivalent.

5.1.4.10 A rigid fast rescue boat shall be constructed in such a way that, when suspended by its lifting point, it is of sufficient strength to withstand a load of 4 times the mass of its full complement of persons and equipment without residual deflection upon removal of the load.

5.1.4.11 The normal equipment of a fast rescue boat shall include a VHF radiocommunication set which is hands-free and watertight."

CHAPTER VI
LAUNCHING AND EMBARKATION APPLIANCES

6.1 Launching and embarkation appliances

31 In paragraph 6.1.1.5, the word "factory" is inserted before the words "static proof load" and the word "on" between the words "load" and "test" is deleted.

32 The following new paragraph 6.1.1.11 is added after existing paragraph 6.1.1.10:

"6.1.1.11 Rescue boat launching appliances shall be provided with foul weather recovery strops for recovery where heavy fall blocks constitute a danger."

33 In paragraph 6.1.2.12, the words "or a mechanism activated by the operator" are replaced by the words "either on deck or in the survival craft or rescue boat".

34 The following new paragraph 6.1.2.13 is added after the existing paragraph 6.1.2.12:

"6.1.2.13 A lifeboat launching appliance shall be provided with means for hanging-off the lifeboat to free the on-load release mechanism for maintenance."

35 The following new section 6.1.7 is added after the existing section 6.1.6:

"6.1.7 *Launching appliances for fast rescue boats*

6.1.7.1 Every fast rescue boat launching appliance shall comply with the requirements of paragraphs 6.1.1 and 6.1.2 except 6.1.2.10 and, in addition, shall comply with the requirements of this paragraph.

6.1.7.2 The launching appliance shall be fitted with a device to dampen the forces due to interaction with the waves when the fast rescue boat is launched or recovered. The device shall include a flexible element to soften shock forces and a damping element to minimize oscillations.

6.1.7.3 The winch shall be fitted with an automatic high-speed tensioning device which prevents the wire from going slack in all sea state conditions in which the fast rescue boat is intended to operate.

6.1.7.4 The winch brake shall have a gradual action. When the fast rescue boat is lowered at full speed and the brake is applied sharply, the additional dynamic force induced in the wire due to retardation shall not exceed 0.5 times the working load of the launching appliance.

6.1.7.5 The lowering speed for a fast rescue boat with its full complement of persons and equipment shall not exceed 1 m/s. Notwithstanding the requirements of paragraph 6.1.1.9, a fast rescue boat launching appliance shall be capable of hoisting the fast rescue boat with 6 persons and its full complement of equipment at a speed of not less than 0.8 m/s. The appliance shall also be capable of lifting the rescue boat with the maximum number of persons that can be accommodated in it, as calculated in accordance with paragraph 4.4.2."

CHAPTER VII
OTHER LIFE-SAVING APPLIANCES

7.2 General alarm and public address system

36 The third sentence of paragraph 7.2.1.1 is deleted.

37 The second sentence of paragraph 7.2.1.2 is deleted.

***

ANNEX 5

RESOLUTION MSC.219(82)

(adopted on 8 December 2006)

ADOPTION OF AMENDMENTS TO THE INTERNATIONAL CODE FOR THE CONSTRUCTION AND EQUIPMENT OF SHIPS CARRYING DANGEROUS CHEMICALS IN BULK

THE MARITIME SAFETY COMMITTEE,

RECALLING Article 28(b) of the Convention on the International Maritime Organization concerning the functions of the Committee,

NOTING resolution MSC.4(48), by which it adopted the International Code for the Construction and Equipment of Ships Carrying Dangerous Chemicals in Bulk (hereinafter referred to as "the IBC Code"), which has become mandatory under chapter VII of the International Convention for the Safety of Life at Sea (SOLAS), 1974 (hereinafter referred to as "the Convention"),

NOTING ALSO article VIII(b) and regulation VII/8.1 of the Convention concerning the procedure for amending the IBC Code,

BEING DESIROUS of keeping the IBC Code up to date,

HAVING CONSIDERED, at its eighty-second session, amendments to the IBC Code proposed and circulated in accordance with article VIII(b)(i) of the Convention,

CONSIDERING that it is highly desirable for the provisions of the IBC Code, which are mandatory under both the International Convention for the Prevention of Pollution from Ships, 1973, as modified by the Protocol of 1978 relating thereto (MARPOL 73/78) and the 1974 SOLAS Convention, to remain identical,

1. ADOPTS, in accordance with article VIII(b)(iv) of the Convention, amendments to the International Code for the Construction and Equipment of Ships Carrying Dangerous Chemicals in Bulk, the text of which is set out in the Annex to the present resolution;

2. DETERMINES, in accordance with article VIII(b)(vi)(2)(bb) of the Convention, that the amendments shall be deemed to have been accepted on 1 July 2008 unless, prior to that date, more than one third of the Contracting Governments to the Convention or Contracting Governments the combined merchant fleets of which constitute not less than 50% of the gross tonnage of the world's merchant fleet, have notified their objections to the amendments;

3. INVITES Contracting Governments to note that, in accordance with article VIII(b)(vii)(2) of the Convention, the amendments shall enter into force on 1 January 2009 upon their acceptance in accordance with paragraph 2 above;

4. REQUESTS the Secretary-General, in conformity with article VIII(b)(v) of the Convention, to transmit certified copies of the present resolution and the text of the amendments contained in the Annex to all Contracting Governments to the Convention;

5. FURTHER REQUESTS the Secretary-General to transmit copies of this resolution and its Annex to Members of the Organization, which are not Contracting Governments to the Convention.

ANNEX

AMENDMENTS TO THE INTERNATIONAL CODE FOR THE CONSTRUCTION AND EQUIPMENT OF SHIPS CARRYING DANGEROUS CHEMICALS IN BULK

CHAPTER 11
FIRE PROTECTION AND FIRE EXTINCTION

11.1 Application

1 In paragraph 11.1.1, subparagraphs .4 to .6 are replaced by the following subparagraphs:

".4 regulation 10.5.6 shall apply to ships of 2,000 gross tonnage and over;

.5 the provisions of 11.3 shall apply in lieu of regulation 10.8;

.6 the provisions of 11.2 shall apply in lieu of regulation 10.9;

.7 regulation 4.5.10 shall apply to ships of 500 gross tonnage and over, replacing "hydrocarbon gases" by "flammable vapours" in the regulation; and

.8 regulations 13.3.4 and 13.4.3 shall apply to ships of 500 gross tonnage and over."

2 In paragraph 11.1, the following new paragraph 11.1.4 is added:

"11.1.4 In lieu of the provisions of SOLAS regulation II-2/1.6.7, the requirements of regulations II-2/4.5.10.1.1 and II-2/4.5.10.1.4 shall apply and a system for continuous monitoring of the concentration of flammable vapours shall be fitted on ships of 500 gross tonnage and over which were constructed before 1 January 2009 by the date of the first scheduled dry-docking after 1 January 2009, but not later than 1 January 2012. Sampling points or detector heads should be located in suitable positions in order that potentially dangerous leakages are readily detected. When the flammable vapour concentration reaches a pre-set level which shall not be higher than 10% of the lower flammable limit, a continuous audible and visual alarm signal shall be automatically effected in the pump-room and cargo control room to alert personnel to the potential hazard. However, existing monitoring systems already fitted having a pre-set level not greater than 30% of the lower flammable limit may be accepted. Notwithstanding the above provisions, the Administration may exempt ships not engaged on international voyages from those requirements."

CHAPTER 17 – SUMMARY OF MINIMUM REQUIREMENTS

CHAPTER 18 – LIST OF PRODUCTS TO WHICH CODE DOES NOT APPLY

CHAPTER 19 – LIST OF PRODUCTS CARRIED IN BULK

3 The existing texts of chapters 17, 18 and 19 are replaced by the following*:

"CHAPTER 17
SUMMARY OF MINIMUM REQUIREMENTS

Mixtures of noxious liquid substances presenting pollution hazards only, and which are assessed or provisionally assessed under regulation 6.3 of MARPOL Annex II, may be carried under the requirements of the Code applicable to the appropriate position of the entry in this chapter for Noxious Liquid Substances, not otherwise specified (n.o.s.).

EXPLANATORY NOTES

Product name *(column a)*	The product name shall be used in the shipping document for any cargo offered for bulk shipments. Any additional name may be included in brackets after the product name. In some cases, the product names are not identical with the names given in previous issues of the Code.
UN Number *(column b)*	Deleted
Pollution Category *(column c)*	The letter X, Y, Z means the Pollution Category assigned to each product under MARPOL Annex II
Hazards *(column d)*	"S" means that the product is included in the Code because of its safety hazards; "P" means that the product is included in the Code because of its pollution hazards; and "S/P" means that the product is included in the Code because of both its safety and pollution hazards.
Ship type *(column e)*	1: ship type 1 (2.1.2.1) 2: ship type 2 (2.1.2.2) 3: ship type 3 (2.1.2.3)
Tank type *(column f)*	1: independent tank (4.1.1) 2: integral tank (4.1.2) G: gravity tank (4.1.3) P: pressure tank (4.1.4)
Tank vents *(column g)*	Cont.: controlled venting Open: open venting
Tank environmental control *(column h)*	Inert: inerting (9.1.2.1) Pad: liquid or gas padding (9.1.2.2) Dry: drying (9.1.2.3) Vent: natural or forced ventilation (9.1.2.4) No: no special requirements under this Code
Electrical equipment *(column i)*	Temperature classes (i') T1 to T6 - indicates no requirements blank no information Apparatus group (i'') IIA, IIB or IIC: - indicates no requirements blank no information Flash point (i''') Yes: flashpoint exceeding 60°C (10.1.6) No: flashpoint not exceeding 60°C (10.1.6) NF: non-flammable product (10.1.6)

* In view of further editorial corrections to the substances in chapter 19, the Committee requested the Secretariat to effect the necessary editorial modifications to the authentic text of amendments, following the adoption of the amendments by MEPC 56 (see paragraph 3.56 of document MSC 82/24).

Gauging *(column j)*	O: open gauging (13.1.1.1) R: restricted gauging (13.1.1.2) C: closed gauging (13.1.1.3)
Vapour detection *(column k)*	F: flammable vapours T: toxic vapours No: indicates no special requirements under this Code
Fire protection *(column l)*	A: alcohol-resistant foam or multi-purpose foam B: regular foam; encompasses all foams that are not of an alcohol-resistant type, including fluoro-protein and aqueous-film-forming foam (AFFF) C: water-spray D: dry chemical No: no special requirements under this Code
Materials of construction *(column m)*	Deleted
Emergency equipment *(column n)*	Yes: see 14.3.1 No: no special requirements under this Code
Specific and operational requirements *(column o)*	When specific reference is made to chapters 15 and/or 16, these requirements shall be additional to the requirements in any other column

a	c	d	e	f	g	h	i'	i''	i'''	j	k	l	n	o
Acetic acid	Z	S/P	3	2G	Cont	No	T1	IIA	No	R	F	A	Yes	15.11.2, 15.11.3, 15.11.4, 15.11.6, 15.11.7, 15.11.8, 15.19.6, 16.2.9
Acetic anhydride	Z	S/P	2	2G	Cont	No	T2	IIA	No	R	F-T	A	Yes	15.11.2, 15.11.3, 15.11.4, 15.11.6, 15.11.7, 15.11.8, 15.19.6
Acetochlor	X	P	2	2G	Open	No			Yes	O	No	A	No	15.19.6, 16.2.6, 16.2.9
Acetone cyanohydrin	Y	S/P	2	2G	Cont	No	T1	IIA	Yes	C	T	A	Yes	15.12, 15.13,15.17, 15.18, 15.19, 16.6.1, 16.6.2, 16.6.3
Acetonitrile	Z	S/P	2	2G	Cont	No	T2	IIA	No	R	F-T	A	No	15.12, 15.19.6
Acetonitrile (Low purity grade)	Y	S/P	3	2G	Cont	No	T1	IIA	No	R	F-T	AC	No	15.12.3, 15.12.4, 15.19.6
Acid oil mixture from soyabean, corn (maize) and sunflower oil refining	Y	S/P	2	2G	Open	No	-	-	Yes	O	No	ABC	No	15.19.6, 16.2.6, 16.2.9
Acrylamide solution (50% or less)	Y	S/P	2	2G	Open	No			NF	C	No	No	No	15.12.3, 15.13, 15.19.6, 16.6.1, 16.2.9
Acrylic acid	Y	S/P	2	2G	Cont	No	T2	IIA	No	C	F-T	A	Yes	15.11.2, 15.11.3, 15.11.4, 15.11.6, 15.11.7, 15.11.8, 15.12.3, 15.12.4, 15.13, 15.17, 15.19, 16.6.1, 16.2.9
Acrylonitrile	Y	S/P	2	2G	Cont	No	T1	IIB	No	C	F-T	A	Yes	15.12, 15.13, 15.17, 15.19
Acrylonitrile-Styrene copolymer dispersion in polyether polyol	Y	P	3	2G	Open	No			Yes	O	No	AB	No	15.19.6, 16.2.6
Adiponitrile	Z	S/P	3	2G	Cont	No		IIB	Yes	R	T	A	No	16.2.9
Alachlor technical (90% or more)	X	S/P	2	2G	Open	No			Yes	O	No	AC	No	15.19.6, 16.2.9
Alcohol (C9-C11) poly (2.5-9) ethoxylate	Y	P	3	2G	Open	No			Yes	O	No	A	No	15.19.6, 16.2.9
Alcohol (C6-C17) (secondary) poly(3-6)ethoxylates	Y	P	2	2G	Open	No			Yes	O	No	A	No	15.19.6, 16.2.9
Alcohol (C6-C17) (secondary) poly(7-12)ethoxylates	Y	P	2	2G	Open	No			Yes	O	No	A	No	15.19.6, 16.2.6, 16.2.9
Alcohol (C12-C16) poly(1-6)ethoxylates	Y	P	2	2G	Open	No			Yes	O	No	A	No	15.19.6, 16.2.9
Alcohol (C12-C16) poly(20+)ethoxylates	Y	P	3	2G	Open	No			Yes	O	No	A	No	16.2.9, 15.19.6
Alcohol (C12-C16) poly(7-19)ethoxylates	Y	P	2	2G	Open	No			Yes	O	No	A	No	15.19.6, 16.2.9
Alcohols (C13+)	Y	P	2	2G	Open	No			Yes	O	No	AB	No	15.19.6, 16.2.9
Alcohols (C8-C11), primary, linear and essentially linear	Y	S/P	2	2G	Cont	No	-	-	Yes	R	T	ABC	No	15.12.3, 15.2.4, 15.19.6, 16.2.6, 16.2.9
Alcohols (C12-C13), primary, linear and essentially linear	Y	S/P	2	2G	Open	No	-	-	Yes	O	No	ABC	No	15.19.6, 16.2.6, 16.2.9
Alcohols (C14-C18), primary, linear and essentially linear	Y	S/P	2	2G	Open	No	-	-	Yes	O	No	ABC	No	15.19.6, 16.2.6
Alkanes (C6-C9)	X	P	2	2G	Cont	No			No	R	F	A	No	15.19.6

a	c	d	e	f	g	h	i'	i''	i'''	j	k	l	n	o
Iso- and cyclo-alkanes (C10-C11)	Y	P	3	2G	Cont	No	-	-	No	R	F	A	No	15.19.6
Iso- and cyclo-alkanes (C12+)	Y	P	3	2G	Cont	No	-	-	No	R	F	A	No	
n-Alkanes (C10+)	Y	P	3	2G	Cont	No	-	-	No	R	F	A	No	15.19.6
Alkaryl polyethers (C9-C20)	Y	P	2	2G	Open	No			Yes	O	No	AB	No	15.19.6, 16.2.6
Alkenyl (C11+) amide	X	P	2	2G	Open	No	-	-	Yes	O	No	A	No	15.19.6, 16.2.6, 16.2.9
Alkenyl (C16-C20) succinic anhydride	Z	S/P	3	2G	Cont	No			Yes	C	T	No	Yes	15.12, 15.17, 15.19
Alkyl acrylate-vinylpyridine copolymer in toluene	Y	P	2	2G	Cont	No			No	R	F	A	No	15.19.6, 16.2.9
Alkylaryl phosphate mixtures (more than 40% Diphenyl tolyl phosphate, less than 0.02% ortho-isomers)	X	S/P	1	2G	Cont	No	T1	IIA	Yes	C	T	ABC	No	15.12, 15.17, 15.19
Alkylated (C4-C9) hindered phenols	Y	S/P	2	2G	Open	No	-	-	Yes	O	No	BD	No	15.19.6, 16.2.6, 16.2.9
Alkylbenzene, alkylindane, alkylindene mixture (each C12-C17)	Z	P	3	2G	Open	No			Yes	O	No	A	No	15.19.6
Alkyl benzene distillation bottoms	Y	S/P	2	2G	Open	No	-	-	Yes	O	No	ABC	No	15.19.6, 16.2.6
Alkylbenzene mixtures (containing at least 50% of toluene)	Y	S/P	3	2G	Cont	No	T1	IIA	No	C	F-T	ABC	No	15.12, 15.17, 15.19.6
Alkyl (C3-C4) benzenes	Y	P	2	2G	Cont	No			No	R	F	A	No	15.19.6
Alkyl (C5-C8) benzenes	X	P	2	2G	Open	No			Yes	O	No	A	No	15.19.6
Alkyl(C9+)benzenes	Y	P	3	2G	Open	No	-	-	Yes	O	No	AB	No	
Alkyl (C11-C17) benzene sulphonic acid	Y	P	2	2G	Open	No	-	-	Yes	O	No	A	No	15.19.6, 16.2.6
Alkylbenzene sulphonic acid, sodium salt solution	Y	S/P	2	2G	Open	No	-	-	NF	O	No	No	No	16.2.9, 15.19.6, 16.2.6
Alkyl (C12+) dimethylamine	X	P	1	2G	Open	No	-	-	Yes	O	No	A	No	15.12, 15.17, 15.19
Alkyl dithiocarbamate (C19-C35)	Y	P	3	2G	Open	No			Yes	O	No	AB	No	15.19.6, 16.2.6, 16.2.9
Alkyldithiothiadiazole (C6-C24)	Y	P	3	2G	Open	No	-	-	Yes	O	No	A	No	15.19.6, 16.2.6
Alkyl ester copolymer (C4-C20)	Y	P	2	2G	Open	No			Yes	O	No	AB	No	15.19.6, 16.2.6, 16.2.9
Alkyl (C8-C10)/(C12-C14):(40% or less/60% or more) polyglucoside solution (55% or less)	Y	P	3	2G	Open	No			Yes	O	No	No	No	15.19.6, 16.2.6, 16.2.9
Alkyl (C8-C10)/(C12-C14):(60% or more/40% or less) polyglucoside solution(55% or less)	Y	P	3	2G	Open	No			Yes	O	No	No	No	16.2.6, 16.2.9
Alkyl (C7-C9) nitrates	Y	S/P	2	2G	Open	No			Yes	O	No	AB	No	15.19.6, 15.20, 16.6.1, 16.6.2, 16.6.3
Alkyl(C7-C11)phenol poly(4-12) ethoxylate	Y	P	2	2G	Open	No			Yes	O	No	A	No	15.19.6
Alkyl (C8-C40) phenol sulphide	Z	P	3	2G	Open	No			Yes	O	No	AB	No	

a	c	d	e	f	g	h	i'	i''	i'''	j	k	l	n	o
Alkyl (C8-C9) phenylamine in aromatic solvents	Y	P	2	2G	Cont	No			No	R	F	A	No	15.19.6
Alkyl (C9-C15) phenyl propoxylate	Z	P	3	2G	Open	No			Yes	O	No	AB	No	
Alkyl (C8-C10)/(C12-C14):(50%/50%) polyglucoside solution (55% or less)	Y	P	3	2G	Open	No			Yes	O	No	No	No	16.2.9, 16.2.6
Alkyl (C12-C14) polyglucoside solution (55% or less)	Y	P	3	2G	Open	No			Yes	O	No	No	No	15.19.6, 16.2.9
Alkyl (C8-C10) polyglucoside solution (65% or less).	Y	P	3	2G	Open	No			Yes	O	No	No	No	16.2.6
Alkyl(C10-C20, saturated and unsaturated) phosphite	Y	P	2	2G	Open	No			Yes	O	No	A	No	16.2.9
Alkyl sulphonic acid ester of phenol	Y	P	3	2G	Open	No			Yes	O	No	AB	No	15.19.6, 16.2.6
Allyl alcohol	Y	S/P	2	2G	Cont	No	T2	IIB	No	C	F-T	A	Yes	15.12, 15.17, 15.19
Allyl chloride	Y	S/P	2	2G	Cont	No	T2	IIA	No	C	F-T	A	Yes	15.12, 15.17, 15.19
Aluminium sulphate solution	Y	P	2	2G	Open	No			Yes	O	No	A	No	15.19.6
2-(2-Aminoethoxy) ethanol	Z	S/P	3	2G	Open	No			Yes	O	No	AD	No	15.19.6
Aminoethyldiethanolamine/Aminoethylethanolamine solution	Z	P	3	2G	Open	No	-	-	Yes	O	No	A	No	16.2.9
Aminoethyl ethanolamine	Z	S/P	3	2G	Open	No	T2	IIA	Yes	O	No	A	No	
N-Aminoethylpiperazine	Z	S/P	3	2G	Cont	No			Yes	R	T	A	No	15.19.6, 16.2.9
2-Amino-2-methyl-1-propanol	Z	P	3	2G	Open	No			Yes	O	No	A	No	
Ammonia aqueous (28% or less)	Y	S/P	2	2G	Cont	No			NF	R	T	ABC	Yes	15.19.6
Ammonium hydrogen phosphate solution	Z	P	3	2G	Open	No			Yes	O	No	A	No	
Ammonium lignosulphonate solutions	Z	P	3	2G	Open	No	-	-	Yes	O	No	A	No	16.2.9
Ammonium nitrate solution (93% or less)	Z	S/P	2	1G	Open	No			NF	O	No	No	No	15.2, 15.11.4, 15.11.6, 15.18, 15.19.6, 16.2.9
Ammonium polyphosphate solution	Z	P	3	2G	Open	No	-	-	Yes	O	No	A	No	
Ammonium sulphate solution	Z	P	3	2G	Open	No			Yes	O	No	A	No	
Ammonium sulphide solution (45% or less)	Y	S/P	2	2G	Cont	No			No	C	F-T	A	Yes	15.12, 15.17, 15.19, 16.6.1, 16.6.2, 16.6.3
Ammonium thiosulphate solution (60% or less)	Z	P	3	2G	Open	No			NF	O	No	No	No	16.2.9
Amyl acetate (all isomers)	Y	P	3	2G	Cont	No			No	R	F	A	No	15.19.6
n-Amyl alcohol	Z	P	3	2G	Cont	No			No	R	F	AB	No	
Amyl alcohol, primary	Z	P	3	2G	Cont	No			No	R	F	AB	No	
sec-Amyl alcohol	Z	P	3	2G	Cont	No			No	R	F	AB	No	
tert-Amyl alcohol	Z	P	3	2G	Cont	No			No	R	F	A	No	

a	c	d	e	f	g	h	i'	i''	i'''	j	k	l	n	o
tert-Amyl methyl ether	X	P	2	2G	Cont	No	T3		No	R	F	A	No	15.19.6
Aniline	Y	S/P	2	2G	Cont	No	T1	IIA	Yes	C	T	A	No	15.12, 15.17, 15.19
Aryl polyolefins (C11-C50)	Y	P	2	2G	Open	No			Yes	O	No	AB	No	15.19.6, 16.2.6, 16.2.9
Aviation alkylates (C8 paraffins and iso-paraffins BPT 95 - 120°C)	X	P	2	2G	Cont	No			No	R	F	B	No	15.19.6
Barium long chain (C11-C50) alkaryl sulphonate	Y	S/P	2	2G	Open	No			Yes	O	No	AD	No	15.12.3, 15.19, 16.2.6, 16.2.9
Benzene and mixtures having 10% benzene or more (i)	Y	S/P	3	2G	Cont	No	T1	IIA	No	C	F-T	AB	No	15.12.1, 15.17, 15.19.6, 16.2.9
Benzene sulphonyl chloride	Z	S/P	3	2G	Cont	No			Yes	R	T	AD	No	15.19.6, 16.2.9
Benzenetricarboxylic acid, trioctyl ester	Y	P	2	2G	Open	No			Yes	O	No	AB	No	15.19.6, 16.2.6
Benzyl acetate	Y	P	2	2G	Open	No			Yes	O	No	A	No	15.19.6
Benzyl alcohol	Y	P	3	2G	Open	No			Yes	O	No	A	No	15.19.6
Benzyl chloride	Y	S/P	2	2G	Cont	No	T1	IIA	Yes	C	T	AB	Yes	15.12, 15.13, 15.17, 15.19
Brake fluid base mix: Poly(2-8)alkylene (C2-C3) glycols/Polyalkylene (C2-C10) glycols monoalkyl (C1-C4) ethers and their borate esters	Z	P	3	2G	Open	No	-	-	Yes	O	No	A	No	
Bromochloromethane	Z	S/P	3	2G	Cont	No			NF	R	T	No	No	
Butene oligomer	X	P	2	2G	Open	No			Yes	O	No	A	No	15.19.6
Butyl acetate (all isomers)	Y	P	3	2G	Cont	No			No	R	F	A	No	15.19.6
Butyl acrylate (all isomers)	Y	S/P	2	2G	Cont	No	T2	IIB	No	R	F-T	A	No	15.13, 15.19.6, 16.6.1, 16.6.2
tert-Butyl alcohol	Z	P	3	2G	Cont	No			No	R	F	A	No	
Butylamine (all isomers)	Y	S/P	2	2G	Cont	No			No	R	F-T	A	Yes	15.12, 15.17, 15.19.6
Butylbenzene (all isomers)	X	P	2	2G	Cont	No			No	R	F	A	No	15.19.6
Butyl benzyl phthalate	X	P	2	2G	Open	No			Yes	O	No	A	No	15.19.6
Butyl butyrate (all isomers)	Y	P	3	2G	Cont	No			No	R	F	A	No	15.19.6
Butyl/Decyl/Cetyl/Eicosyl methacrylate mixture	Y	S/P	2	2G	Cont	No			Yes	R	No	AD	No	15.13, 16.6.1, 16.6.2, 15.19.6
Butylene glycol	Z	P	3	2G	Open	No			Yes	O	No	A	No	
1,2-Butylene oxide	Y	S/P	3	2G	Cont	Inert	T2	IIB	No	R	F	AC	No	15.8.1 to 15.8.7, 15.8.12, 15.8.13, 15.8.16, 15.8.17, 15.8.18, 15.8.19, 15.8.21, 15.8.25, 15.8.27, 15.8.29, 15.19.6
n-Butyl ether	Y	S/P	3	2G	Cont	Inert	T4	IIB	No	R	F-T	A	No	15.4.6, 15.12, 15.19.6
Butyl methacrylate	Z	S/P	3	2G	Cont	No		IIA	No	R	F-T	AD	No	15.13, 15.19.6, 16.6.1, 16.6.2

a	c	d	e	f	g	h	i'	i''	i'''	j	k	l	n	o
n-Butyl propionate	Y	P	3	2G	Cont	No			No	R	F	A	No	15.19.6
Butyraldehyde (all isomers)	Y	S/P	3	2G	Cont	No	T3	IIA	No	R	F-T	A	No	15.19.6
Butyric acid	Y	S/P	3	2G	Cont	No			Yes	R	No	A	No	15.11.2, 15.11.3, 15.11.4, 15.11.6, 15.11.7, 15.11.8, 15.19.6
gamma-Butyrolactone	Y	P	3	2G	Open	No			Yes	O	No	AB	No	15.19.6
Calcium carbonate slurry	Z	P	3	2G	Open	No			Yes	O	No	AB	No	
Calcium hydroxide slurry	Z	P	3	2G	Open	No	-	-	Yes	O	No	A	No	16.2.9
Calcium hypochlorite solution (15% or less)	Y	S/P	2	2G	Cont	No			NF	R	No	No	No	15.19.6
Calcium hypochlorite solution (more than 15%)	X	S/P	1	2G	Cont	No			NF	R	No	No	No	15.19, 16.2.9
Calcium lignosulphonate solutions	Z	P	3	2G	Open	No	-	-	Yes	O	No	A	No	16.2.9
Calcium long-chain alkaryl sulphonate (C11-C50)	Z	P	3	2G	Open	No	-	-	Yes	O	No	A	No	16.2.9
Calcium long-chain alkyl(C5-C10) phenate	Y	P	3	2G	Open	No			Yes	O	No	A	No	15.19.6
Calcium long-chain alkyl(C11-C40) phenate	Y	P	2	2G	Open	No	-	-	Yes	O	No	A	No	15.19.6, 16.2.6
Calcium long-chain alkyl phenate sulphide (C8-C40)	Y	P	2	2G	Open	No			Yes	O	No	AB	No	15.19.6, 16.2.6, 16.2.9
Calcium long-chain alkyl salicylate (C13+)	Y	P	2	2G	Open	No			Yes	O	No	AB	No	15.19.6, 16.2.6
Calcium nitrate/Magnesium nitrate/Potassium chloride solution	Z	P	3	2G	Open	No	-	-	Yes	O	No	A	No	16.2.9
epsilon-Caprolactam (molten or aqueous solutions)	Z	P	3	2G	Open	No			Yes	O	No	A	No	
Carbolic oil	Y	S/P	2	2G	Cont	No			Yes	C	F-T	A	No	15.12, 15.19.6, 16.2.9
Carbon disulphide	Y	S/P	2	1G	Cont	Pad+inert	T6	IIC	No	C	F-T	C	Yes	15.3, 15.12, 15.19
Carbon tetrachloride	Y	S/P	2	2G	Cont	No			NF	C	T	No	Yes	15.12, 15.17, 15.19.6
Cashew nut shell oil (untreated)	Y	S	2	2G	Cont	No			Yes	R	T	AB	No	15.19.6, 16.2.6, 16.2.9
Castor oil	Y	S/P	2 (k)	2G	Open	No	-	-	Yes	O	No	ABC	No	15.9.6, 16.2.6, 16.2.9
Cetyl/Eicosyl methacrylate mixture	Y	S/P	2	2G	Open	No			Yes	O	No	AD	No	15.13, 15.19.6, 16.6.1, 16.6.2, 16.2.9
Chlorinated paraffins (C10-C13)	X	P	1	2G	Open	No			Yes	O	No	A	No	15.19, 16.2.6
Chlorinated paraffins (C14-C17) (with 50% chlorine or more, and less than 1% C13 or shorter chains)	X	P	1	2G	Open	No	-	-	Yes	O	No	A	No	15.19
Chloroacetic acid (80% or less)	Y	S/P	2	2G	Cont	No			NF	C	No	No	No	15.11.2, 15.11.4, 15.11.6, 15.11.7, 15.11.8, 15.12.3, 15.19, 16.2.9
Chlorobenzene	Y	S/P	2	2G	Cont	No	T1	IIA	No	R	F-T	AB	No	15.19.6

a	c	d	e	f	g	h	i'	i''	i'''	j	k	l	n	o
Chloroform	Y	S/P	3	2G	Cont	No			NF	R	T	No	Yes	15.12, 15.19.6
Chlorohydrins (crude)	Y	S/P	2	2G	Cont	No		IIA	No	C	F-T	A	No	15.12, 15.19
4-Chloro-2-methylphenoxyacetic acid, dimethylamine salt solution	Y	P	2	2G	Open	No			NF	O	No	No	No	15.19.6,16.2.9
o-Chloronitrobenzene	Y	S/P	2	2G	Cont	No			Yes	C	T	ABD	No	15.12, 15.17, 15.18, 15.19, 16.2.6, 16.2.9
1-(4-Chlorophenyl)-4,4- dimethyl-pentan-3-one	Y	P	2	2G	Open	No			Yes	O	No	ABD	No	15.19.6, 16.2.6, 16.2.9
2- or 3-Chloropropionic acid	Z	S/P	3	2G	Open	No			Yes	O	No	A	No	15.11.2, 15.11.3, 15.11.4, 15.11.6, 15.11.7, 15.11.8, 16.2.9
Chlorosulphonic acid	Y	S/P	1	2G	Cont	No			NF	C	T	No	Yes	15.11.2, 15.11.3, 15.11.4, 15.11.5, 15.11.6, 15.11.7, 15.11.8, 15.12, 15.16.2, 15.19
m-Chlorotoluene	Y	S/P	2	2G	Cont	No			No	R	F-T	AB	No	15.19.6
o-Chlorotoluene	Y	S/P	2	2G	Cont	No			No	R	F-T	AB	No	15.19.6
p-Chlorotoluene	Y	S/P	2	2G	Cont	No			No	R	F-T	AB	No	15.19.6, 16.2.9
Chlorotoluenes (mixed isomers)	Y	S/P	2	2G	Cont	No			No	R	F-T	AB	No	15.19.6
Choline chloride solutions	Z	P	3	2G	Open	No			Yes	O	No	A	No	
Citric acid (70% or less)	Z	P	3	2G	Open	No			Yes	O	No	A	No	
Coal tar	X	S/P	2	2G	Cont	No	T2	IIA	Yes	R	No	BD	No	15.19.6, 16.2.6, 16.2.9
Coal tar naphtha solvent	Y	S/P	2	2G	Cont	No	T3	IIA	No	R	F-T	AD	No	15.19.6, 16.2.9
Coal tar pitch (molten)	X	S/P	2	1G	Cont	No	T2	IIA	Yes	R	No	BD	No	15.19.6, 16.2.6, 16.2.9
Cocoa butter	Y	S/P	2(k)	2G	Open	No	-	-	Yes	O	No	ABC	No	15.19.6, 16.2.6, 16.2.9
Coconut oil	Y	S/P	2 (k)	2G	Open	No	-	-	Yes	O	No	ABC	No	15.19.6, 16.2.6, 16.2.9
Coconut oil fatty acid	Y	S/P	2	2G	Open	No	-	-	Yes	O	No	ABC	No	15.19.6, 16.2.6, 16.2.9
Coconut oil fatty acid methyl ester	Y	P	2	2G	Open	No	-	-	Yes	O	No	A	No	15.19.6
Copper salt of long chain (C17+) alkanoic acid	Y	P	2	2G	Open	No	-	-	Yes	O	No	A	No	15.19.6, 16.2.6, 16.2.9
Corn Oil	Y	S/P	2 (k)	2G	Open	No	-	-	Yes	O	No	ABC	No	15.19.6, 16.2.6, 16.2.9
Cotton seed oil	Y	S/P	2 (k)	2G	Open	No	-	-	Yes	O	No	ABC	No	15.19.6, 16.2.6, 16.2.9
Creosote (coal tar)	X	S/P	2	2G	Cont	No	T2	IIA	Yes	R	T	AD	No	15.12.3, 15.12.4, 15.19.6, 16.2.6, 16.2.9
Cresols (all isomers)	Y	S/P	2	2G	Open	No	T1	IIA	Yes	O	No	AB	No	15.19.6, 16.2.9
Cresylic acid, dephenolized	Y	S/P	2	2G	Open	No			Yes	O	No	AB	No	15.19.6
Cresylic acid, sodium salt solution	Y	S/P	2	2G	Open	No			Yes	O	No	No	No	15.19.6, 16.2.9

a	c	d	e	f	g	h	i'	i''	i'''	j	k	l	n	o
Crotonaldehyde	Y	S/P	2	2G	Cont	No	T3	IIB	No	R	F-T	A	Yes	15.12, 15.17, 15.19.6
1,5,9-Cyclododecatriene	X	S/P	1	2G	Cont	No			Yes	R	T	A	No	15.13, 15.19, 16.6.1, 16.6.2
Cycloheptane	X	P	2	2G	Cont	No			No	R	F	A	No	15.19.6
Cyclohexane	Y	P	2	2G	Cont	No			No	R	F	A	No	15.19.6, 16.2.9
Cyclohexanol	Y	P	2	2G	Open	No			Yes	O	No	AB	No	15.19.6, 16.2.9
Cyclohexanone	Z	S/P	3	2G	Cont	No	T2	IIA	No	R	F-T	A	No	15.19.6
Cyclohexanone, Cyclohexanol mixture	Y	S/P	3	2G	Cont	No			Yes	R	F-T	A	No	15.19.6
Cyclohexyl acetate	Y	P	3	2G	Cont	No			No	R	F	A	No	15.19.6
Cyclohexylamine	Y	S/P	3	2G	Cont	No	T3	IIA	No	R	F-T	AC	No	15.19.6
1,3-Cyclopentadiene dimer (molten)	Y	P	2	2G	Cont	No			No	R	F	A	No	15.19.6, 16.2.6, 16.2.9
Cyclopentane	Y	P	2	2G	Cont	No			No	R	F	A	No	15.19.6
Cyclopentene	Y	P	2	2G	Cont	No			No	R	F	A	No	15.19.6
p-Cymene	Y	P	2	2G	Cont	No			No	R	F	A	No	15.19.6
Decahydronaphthalene	Y	P	2	2G	Cont	No			No	R	F	AB	No	15.19.6
Decanoic acid	X	P	2	2G	Open	No			Yes	O	No	A	No	16.2.9
Decene	X	P	2	2G	Cont	No			No	R	F	A	No	15.19.6
Decyl acrylate	X	S/P	1	2G	Open	No	T3	IIA	Yes	O	No	ACD	No	15.13, 15.19, 16.6.1, 16.6.2
Decyl alcohol (all isomers)	Y	P	2	2G	Open	No			Yes	O	No	A	No	15.19.6, 16.2.9(e)
Decyloxytetrahydrothiophene dioxide	X	S/P	2	2G	Cont	No			Yes	R	T	A	No	15.19.6, 16.2.9
Diacetone alcohol	Z	P	3	2G	Cont	No			No	R	F	A	No	
Dialkyl (C8-C9) diphenylamines	Z	P	3	2G	Open	No			Yes	O	No	AB	No	
Dialkyl (C7-C13) phthalates	X	P	2	2G	Open	No			Yes	O	No	AB	No	15.19.6, 16.2.6
Dibromomethane	Y	S/P	2	2G	Cont	No			NF	R	T	No	No	15.12.3, 15.19
Dibutylamine	Y	S/P	3	2G	Cont	No	T2	IIA	No	R	F-T	ACD	No	15.19.6
Dibutyl hydrogen phosphonate	Y	P	3	2G	Open	No			Yes	O	No	A	No	15.19.6, 16.2.9
2,6-Di-tert-butylphenol	X	P	1	2G	Open	No	-	-	Yes	O	No	ABCD	No	15.19, 16.2.9
Dibutyl phthalate	X	P	2	2G	Open	No			Yes	O	No	A	No	15.19.6
Dichlorobenzene (all isomers)	X	S/P	2	2G	Cont	No	T1	IIA	Yes	R	T	ABD	No	15.19.6

a	c	d	e	f	g	h	i'	i''	i'''	j	k	l	n	o
3,4-Dichloro-1-butene	Y	S/P	2	2G	Cont	No			No	C	F-T	ABC	Yes	15.12.3, 15.17, 15.19.6
1,1-Dichloroethane	Z	S/P	3	2G	Cont	No	T2	IIA	No	R	F-T	A	Yes	15.19.6
Dichloroethyl ether	Y	S/P	2	2G	Cont	No	T2	IIA	No	R	F-T	A	No	15.19.6
1,6-Dichlorohexane	Y	S/P	2	2G	Cont	No			No	R	T	AB	No	15.19.6
2,2'-Dichloroisopropyl ether	Y	S/P	2	2G	Cont	No			Yes	R	T	ACD	No	15.12, 15.17, 15.19
Dichloromethane	Y	S/P	3	2G	Cont	No	T1	IIA	Yes	R	T	No	No	15.19.6
2,4-Dichlorophenol	Y	S/P	2	2G	Cont	Dry			Yes	R	T	A	No	15.19.6, 16.2.6, 16.2.9
2,4-Dichlorophenoxyacetic acid, diethanolamine salt solution	Y	S/P	3	2G	Open	No			NF	O	No	No	No	15.19.6, 16.2.9
2,4-Dichlorophenoxyacetic acid, dimethylamine salt solution (70% or less)	Y	S/P	3	2G	Open	No			NF	O	No	No	No	15.19.6, 16.2.9
2,4-Dichlorophenoxyacetic acid, triisopropanolamine salt solution	Y	S/P	3	2G	Open	No			NF	O	No	No	No	15.19.6, 16.2.6, 16.2.9
1,1-Dichloropropane	Y	S/P	2	2G	Cont	No			No	R	F-T	AB	No	15.12, 15.19.6
1,2-Dichloropropane	Y	S/P	2	2G	Cont	No	T1	IIA	No	R	F-T	AB	No	15.12, 15.19.6
1,3-Dichloropropene	X	S/P	2	2G	Cont	No	T2	IIA	No	C	F-T	AB	Yes	15.12, 15.17, 15.18, 15.19
Dichloropropene/Dichloropropane mixtures	X	S/P	2	2G	Cont	No			No	C	F-T	ABD	Yes	15.12, 15.17, 15.18, 15.19
2,2-Dichloropropionic acid	Y	S/P	3	2G	Cont	Dry			Yes	R	No	A	No	15.11.2, 15.11.4, 15.11.6, 15.11.7, 15.11.8, 15.19.6, 16.2.9
Diethanolamine	Y	S/P	3	2G	Open	No	T1	IIA	Yes	O	No	A	No	16.2.6, 16.2.9
Diethylamine	Y	S/P	3	2G	Cont	No	T2	IIA	No	R	F-T	A	Yes	15.12, 15.19.6
Diethylaminoethanol	Y	S/P	2	2G	Cont	No	T2	IIA	No	R	F-T	AC	No	15.19.6
2,6-Diethylaniline	Y	S/P	3	2G	Open	No			Yes	O	No	BCD	No	15.19.6, 16.2.9
Diethylbenzene	Y	P	2	2G	Cont	No			No	R	F	A	No	15.19.6
Diethylene glycol dibutyl ether	Z	S/P	3	2G	Open	No	-	-	Yes	O	No	A	No	
Diethylene glycol diethyl ether	Z	P	3	2G	Open	No	-	-	Yes	O	No	A	No	
Diethylene glycol phthalate	Y	P	3	2G	Open	No	-	-	Yes	O	No	A	No	15.19.6, 16.2.6
Diethylenetriamine	Y	S/P	3	2G	Open	No	T2	IIA	Yes	O	No	A	No	15.19.6
Diethylenetriaminepentaacetic acid, pentasodium salt solution	Z	P	3	2G	Open	No	-	-	Yes	O	No	A	No	
Diethyl ether	Z	S/P	2	1G	Cont	Inert	T4	IIB	No	C	F-T	A	Yes	15.4, 15.14, 15.19
Di-(2-ethylhexyl) adipate	Y	P	2	2G	Open	No			Yes	O	No	AB	No	15.19.6

a	c	d	e	f	g	h	i'	i''	i'''	j	k	l	n	o
Di-(2-ethylhexyl) phosphoric acid	Y	S/P	2	2G	Open	No			Yes	O	No	AD	No	15.19.6
Diethyl phthalate	Y	P	2	2G	Open	No			Yes	O	No	A	No	15.19.6
Diethyl sulphate	Y	S/P	2	2G	Cont	No			Yes	C	T	A	No	15.19.6
Diglycidyl ether of bisphenol A	X	P	2	2G	Open	No			Yes	O	No	A	No	15.19.6, 16.2.6, 16.2.9
Diglycidyl ether of bisphenol F	Y	P	2	2G	Open	No			Yes	O	No	A	No	15.19.6, 16.2.6
Diheptyl phthalate	Y	P	2	2G	Open	No			Yes	O	No	AB	No	15.19.6
Di-n-hexyl adipate	X	P	1	2G	Open	No			Yes	O	No	A	No	15.19
Dihexyl phthalate	Y	P	2	2G	Open	No			Yes	O	No	AB	No	15.19.6
Diisobutylamine	Y	S/P	2	2G	Cont	No			No	R	F-T	ACD	No	15.12.3, 15.19.6
Diisobutylene	Y	P	2	2G	Cont	No			No	R	F	A	No	15.19.6
Diisobutyl ketone	Y	P	3	2G	Cont	No			No	R	F	A	No	15.19.6
Diisobutyl phthalate	X	P	2	2G	Open	No			Yes	O	No	A	No	15.19.6
Diisononyl adipate	Y	P	2	2G	Open	No	-	-	Yes	O	No	A	No	15.19.6
Diisooctyl phthalate	Y	P	2	2G	Open	No			Yes	O	No	AB	No	15.19.6, 16.2.6
Diisopropanolamine	Z	S/P	3	2G	Open	No	T2	IIA	Yes	O	No	A	No	16.2.9
Diisopropylamine	Y	S/P	2	2G	Cont	No	T2	IIA	No	C	F-T	A	Yes	15.12, 15.19
Diisopropylbenzene (all isomers)	X	P	2	2G	Open	No			Yes	O	No	A	No	15.19.6
Diisopropylnaphthalene	Y	P	2	2G	Open	No	-	-	Yes	O	No	A	No	15.19.6
N,N-Dimethylacetamide	Z	S/P	3	2G	Cont	No	-	-	Yes	C	T	ACD	No	15.12, 15.17
N,N-Dimethylacetamide solution (40% or less)	Z	S/P	3	2G	Cont	No			Yes	R	T	B	No	15.12.1, 15.17
Dimethyl adipate	X	P	2	2G	Open	No			Yes	O	No	A	No	15.19.6, 16.2.9
Dimethylamine solution (45% or less)	Y	S/P	3	2G	Cont	No	T2	IIA	No	R	F-T	ACD	No	15.12, 15.19.6
Dimethylamine solution (greater than 45% but not greater than 55%)	Y	S/P	2	2G	Cont	No			No	C	F-T	ACD	Yes	15.12, 15.17, 15.19
Dimethylamine solution (greater than 55% but not greater than 65%)	Y	S/P	2	2G	Cont	No			No	C	F-T	ACD	Yes	15.12, 15.14, 15.17, 15.19
N,N-Dimethylcyclohexylamine	Y	S/P	2	2G	Cont	No			No	R	F-T	AC	No	15.12, 15.17, 15.19.6
Dimethyl disulphide	Y	S/P	2	2G	Cont	No	T2	IIA	No	R	F-T	B	No	15.12.3, 15.12.4, 15.19.6
N,N-Dimethyldodecylamine	X	S/P	1	2G	Open	No			Yes	O	No	B	No	15.19
Dimethylethanolamine	Y	S/P	3	2G	Cont	No	T3	IIA	No	R	F-T	AD	No	15.19.6

a	c	d	e	f	g	h	i'	i''	i'''	j	k	l	n	o
Dimethylformamide	Y	S/P	3	2G	Cont	No	T2	IIA	No	R	F-T	AD	No	15.19.6
Dimethyl glutarate	Y	P	3	2G	Open	No			Yes	O	No	A	No	15.19.6
Dimethyl hydrogen phosphite	Y	S/P	3	2G	Cont	No			Yes	R	T	AD	No	15.12.1, 15.19.6
Dimethyl octanoic acid	Y	P	2	2G	Open	No			Yes	O	No	A	No	15.19.6, 16.2.6, 16.2.9
Dimethyl phthalate	Y	P	3	2G	Open	No			Yes	O	No	A	No	15.19.6, 16.2.9
Dimethylpolysiloxane	Y	P	3	2G	Open	No			Yes	O	No	AB	No	15.19.6
2,2-Dimethylpropane-1,3-diol (molten or solution)	Z	P	3	2G	Open	No	-	-	Yes	O	No	A	No	16.2.9
Dimethyl succinate	Y	P	3	2G	Open	No			Yes	O	No	A	No	16.2.9
Dinitrotoluene (molten)	X	S/P	2	2G	Cont	No			Yes	C	T	A	No	15.12, 15.17, 15.19, 15.21, 16.2.6, 16.2.9, 16.6.4
Dinonyl phthalate	Y	P	2	2G	Open	No	-	-	Yes	O	No	A	No	15.19.6
Dioctyl phthalate	X	P	2	2G	Open	No			Yes	O	No	AB	No	15.19.6
1,4-Dioxane	Y	S/P	2	2G	Cont	No	T2	IIB	No	C	F-T	A	No	15.12, 15.19, 16.2.9
Dipentene	Y	P	3	2G	Cont	No			No	R	F	A	No	15.19.6
Diphenyl	X	P	2	2G	Open	No			Yes	O	No	B	No	15.19.6, 16.2.6, 16.2.9
Diphenylamine (molten)	Y	P	2	2G	Open	No	-	-	Yes	O	No	BD	No	15.19.6, 16.2.6, 16.2.9
Diphenylamine, reaction product with 2,2,4-Trimethylpentene	Y	S/P	1	2G	Open	No			Yes	O	No	A	No	15.19, 16.2.6
Diphenylamines, alkylated	Y	P	2	2G	Open	No			Yes	O	No	A	No	15.19.6, 16.2.6, 16.2.9
Diphenyl/Diphenyl ether mixtures	X	P	2	2G	Open	No			Yes	O	No	B	No	15.19.6, 16.2.9
Diphenyl ether	X	P	2	2G	Open	No			Yes	O	No	A	No	15.19.6, 16.2.9
Diphenyl ether/Diphenyl phenyl ether mixture	X	P	2	2G	Open	No			Yes	O	No	A	No	15.19.6, 16.2.9
Diphenylmethane diisocyanate	Y	S/P	2	2G	Cont	Dry	-	-	Yes(a)	C	T(a)	ABC(b)D	No	15.12, 15.16.2, 15.17, 15.19.6, 16.2.6, 16.2.9
Diphenylol propane-epichlorohydrin resins	X	P	2	2G	Open	No			Yes	O	No	A	No	15.19.6, 16.2.6, 16.2.9
Di-n-propylamine	Y	S/P	2	2G	Cont	No			No	R	F-T	A	No	15.12.3, 15.19.6
Dipropylene glycol	Z	P	3	2G	Open	No			Yes	O	No	A	No	
Resin oil, distilled	Y	S/P	2	2G	Cont	No	T1	IIA	No	C	F-T	ABC	No	15.12,15.17, 15.19.6
Dithiocarbamate ester (C7-C35)	X	P	2	2G	Open	No			Yes	O	No	AD	No	15.19.6, 16.2.9
Ditridecyl adipate	Y	S/P	2	2G	Open	No	-	-	Yes	O	No	A	No	15.19.6, 16.2.6

a	c	d	e	f	g	h	i'	i''	i'''	j	k	l	n	o
Ditridecyl phthalate	Y	S/P	2	2G	Open	No	-	-	Yes	O	No	A	No	15.19.6
Diundecyl phthalate	Y	P	2	2G	Open	No			Yes	O	No	AB	No	15.19.6, 16.2.6, 16.2.9
Dodecane (all isomers)	Y	P	2	2G	Cont	No			No	R	F	AB	No	15.19.6
tert-Dodecanethiol	X	S/P	1	2G	Cont	No	-	-	Yes	C	T	ABD	Yes	15.12, 15.17, 15.19
Dodecene (all isomers)	X	P	2	2G	Open	No			Yes	O	No	A	No	15.19.6
Dodecyl alcohol	Y	P	2	2G	Open	No			Yes	O	No	A	No	15.19.6, 16.2.9
Dodecylamine/Tetradecylamine mixture	Y	S/P	2	2G	Cont	No			Yes	R	T	AD	No	15.19.6, 16.2.9
Dodecylbenzene	Z	P	3	2G	Open	No			Yes	O	No	AB	No	
Dodecyl diphenyl ether disulphonate solution	X	S/P	2	2G	Open	No			NF	O	No	No	No	15.19.6, 16.2.6
Dodecyl hydroxypropyl sulphide	X	P	2	2G	Open	No			Yes	O	No	A	No	15.19.6
Dodecyl methacrylate	Z	S/P	3	2G	Open	No			Yes	O	No	A	No	15.13
Dodecyl/Octadecyl methacrylate (mixture)	Y	P	2	2G	Open	No	-	-	Yes	O	No	A	No	15.13, 16.6.1, 16.6.2, 15.19.6, 16.2.6
Dodecyl/Pentadecyl methacrylate mixture	Y	S/P	2	2G	Open	No			Yes	O	No	AD	No	15.13, 16.6.1, 16.6.2, 15.19.6
Dodecyl phenol	X	P	2	2G	Open	No			Yes	O	No	A	No	15.19.6, 16.2.6
Dodecyl Xylene	Y	P	2	2G	Open	No			Yes	O	No	AB	No	15.19.6, 16.2.6
Drilling brines (containing zinc salts)	X	P	2	2G	Open	No			Yes	O	No	No	No	15.19.6
Drilling brines, including:calcium bromide solution, calcium chloride solution and sodium chloride solution	Z	P	3	2G	Open	No			Yes	O	No	A	No	
Epichlorohydrin	Y	S/P	2	2G	Cont	No		IIB	No	C	F-T	A	E	15.12, 15.17, 15.19.6
Ethanolamine	Y	S/P	3	2G	Open	No	T2	IIA	Yes	O	F-T	A	No	16.2.9
2-Ethoxyethyl acetate	Y	P	3	2G	Cont	No			No	R	F	A	No	15.19.6
Ethoxylated long chain (C16+) alkyloxyalkylamine	Y	S/P	2	2G	Open	No	-	-	Yes	O	No	AB	No	15.19.6, 16.2.9
Ethyl acetate	Z	P	3	2G	Cont	No			No	R	F	AB	No	
Ethyl acetoacetate	Z	P	3	2G	Open	No			Yes	O	No	A	No	
Ethyl acrylate	Y	S/P	2	2G	Cont	No	T2	IIB	No	R	F-T	A	E	15.13, 15.19.6, 16.6.1, 16.6.2
Ethylamine	Y	S/P	2	1G	Cont	No	T2	IIA	No	C	F-T	CD	Yes	15.12, 15.14, 15.19.6
Ethylamine solutions (72% or less)	Y	S/P	2	2G	Cont	No			No	C	F-T	AC	Yes	15.12, 15.14, 15.17, 15.19
Ethyl amyl ketone	Y	P	3	2G	Cont	No			No	R	F	A	No	15.19.6

a	c	d	e	f	g	h	i'	i''	i'''	j	k	l	n	o
Ethylbenzene	Y	P	2	2G	Cont	No			No	R	F	A	No	15.19.6
Ethyl tert-butyl ether	Y	P	3	2G	Cont	No			No	R	F	A	No	15.19.6
Ethyl butyrate	Y	P	3	2G	Cont	No			No	R	F	A	No	15.19.6
Ethylcyclohexane	Y	P	2	2G	Cont	No			No	R	F	A	No	15.19.6
N-Ethylcyclohexylamine	Y	S/P	2	2G	Cont	No			No	R	F-T	A	No	15.19.6
S-Ethyl dipropylthiocarbamate	Y	P	2	2G	Open	No			Yes	O	No	A	No	16.2.9
Ethylene chlorohydrin	Y	S/P	2	2G	Cont	No	T2	IIA	No	C	F-T	AD	Yes	15.12, 15.17, 15.19
Ethylene cyanohydrin	Y	S/P	3	2G	Open	No		IIB	Yes	O	No	A	No	15.19.6
Ethylenediamine	Y	S/P	2	2G	Cont	No	T2	IIA	No	R	F-T	A	No	15.19.6, 16.2.9
Ethylenediaminetetraacetic acid, tetrasodium salt solution	Y	S/P	3	2G	Open	No	-	-	Yes	O	No	A	No	15.19.6
Ethylene dibromide	Y	S/P	2	2G	Cont	No			NF	C	T	No	Yes	15.12, 15.19.6, 16.2.9
Ethylene dichloride	Y	S/P	2	2G	Cont	No	T2	IIA	No	R	F-T	AB	No	15.19
Ethylene glycol	Y	P	3	2G	Open	No			Yes	O	No	A	No	15.19.6
Ethylene glycol acetate	Y	P	3	2G	Open	No	-	-	Yes	O	No	A	No	15.19.6
Ethylene glycol butyl ether acetate	Y	P	3	2G	Open	No			Yes	O	No	A	No	15.19.6
Ethylene glycol diacetate	Y	P	3	2G	Open	No			Yes	O	No	A	No	15.19.6
Ethylene glycol methyl ether acetate	Y	P	3	2G	Open	No			Yes	O	No	A	No	15.19.6
Ethylene glycol monoalkyl ethers	Y	S/P	3	2G	Cont	No			No	R	F	A	No	15.19.6, 16.2.9
Ethylene glycol phenyl ether	Z	P	3	2G	Open	No	-	-	Yes	O	No	A	No	16.2.9
Ethylene glycol phenyl ether/Diethylene glycol phenyl ether mixture	Z	P	3	2G	Open	No	-	-	Yes	O	No	A	No	16.2.9
Ethylene oxide/Propylene oxide mixture with an ethylene oxide content of not more than 30% by mass	Y	S/P	2	1G	Cont	Inert	T2	IIB	No	C	F-T	AC	No	15.8, 15.12, 15.14, 15.19
Ethylene-Vinyl acetate copolymer (emulsion)	Y	P	3	2G	Open	No	-	-	Yes	O	No	A	No	15.19.6, 16.2.6, 16.2.9
Ethyl-3-ethoxypropionate	Y	P	3	2G	Cont	No			No	R	No	A	No	15.19.6
2-Ethylhexanoic acid	Y	P	3	2G	Open	No			Yes	O	No	AB	No	15.19.6
2-Ethylhexyl acrylate	Y	S/P	3	2G	Open	No	T3	IIB	Yes	O	No	A	No	15.13, 15.19.6, 16.6.1, 16.6.2
2-Ethylhexylamine	Y	S/P	2	2G	Cont	No			No	R	F-T	A	No	15.12, 15.19.6
2-Ethyl-2-(hydroxymethyl) propane-1,3-diol (C8-C10) ester	Y	P	2	2G	Open	No			Yes	O	No	AB	No	15.19.6, 16.2.6, 16.2.9

a	c	d	e	f	g	h	i'	i''	i'''	j	k	l	n	o
Ethylidene norbornene	Y	S/P	2	2G	Cont	No			No	R	F-T	AD	No	15.12.1, 15.19.6
Ethyl methacrylate	Y	S/P	3	2G	Cont	No	T2	IIA	No	R	F-T	AD	No	15.13, 15.19.6, 16.6.1, 16.6.2
N-Ethylmethylallylamine	Y	S/P	2	2G	Cont	No	T2	IIB	No	C	F	AC	Yes	15.12.3, 15.17, 15.19
Ethyl propionate	Y	P	3	2G	Open	No			No	R	F	A	No	15.19.6
2-Ethyl-3-propylacrolein	Y	S/P	3	2G	Cont	No		IIA	No	R	F-T	A	No	15.19.6, 16.2.9
Ethyl toluene	Y	P	2	2G	Cont	No			No	R	F	A	No	15.19.6
Fatty acid (saturated C13+)	Y	P	2	2G	Open	No			Yes	O	No	AB	No	15.19.6, 16.2.9
Fatty acid methyl esters (m)	Y	S/P	2	2G	Cont	No	-	-	Yes	R	T	ABC	No	15.12.3, 15.12.4, 15.19.6, 16.2.6, 16.2.9
Fatty acids, 12+	Y	S/P	2	2G	Cont	No	-	-	Yes	R	T	ABC	No	15.2.3, 15.12.4, 15.19.6, 16.2.6, 16.2.9
Fatty acids, C8-C10	Y	S/P	2	2G	Cont	No	-	-	Yes	R	T	ABC	No	15.12.3, 15.12.4, 15.19, 16.2.6, 16.2.9
Fatty acids, essentially linear (C6-C18) 2-ethylhexyl ester.	Y	P	2	2G	Open	No			Yes	O	No	AB	No	15.19.6
Fatty acids, C16+	Y	P	2	2G	Open	No	-	-	Yes	O	No	ABC	No	15.19.6, 16.2.6
Ferric chloride solutions	Y	S/P	3	2G	Open	No			NF	O	No	No	No	15.11, 15.19.6, 16.2.9
Ferric nitrate/Nitric acid solution	Y	S/P	2	2G	Cont	No			NF	R	T	No	Yes	15.11, 15.19
Fish oil	Y	S/P	2 (k)	2G	Open	No	-	-	Yes	O	No	ABC	No	15.19.6, 16.2.6, 16.2.9
Fluorosilicic acid (20-30%) in water solution	Y	S/P	3	1G	Cont	No	-	-	NF	R	T	No	Yes	15.11, 15.19.6
Formaldehyde solutions (45% or less)	Y	S/P	3	2G	Cont	No	T2	IIB	No	R	F-T	A	Yes	15.19.6, 16.2.9
Formamide	Y	P	3	2G	Open	No			Yes	O	No	A	No	15.19.6, 16.2.9
Formic acid	Y	S/P	3	2G	Cont	No	T1	IIA	No	R	T(g)	A	Yes	15.11.2, 15.11.3, 15.11.4, 15.11.6, 15.11.7, 15.11.8, 15.19.6, 16.2.9
Furfural	Y	S/P	3	2G	Cont	No	T2	IIB	No	R	F-T	A	No	15.19.6
Furfuryl alcohol	Y	P	3	2G	Open	No			Yes	O	No	A	No	15.19.6
Glucitol/glycerol blend propoxylated (containing less than 10% amines)	Z	S/P	3	2G	Cont	No	-	-	Yes	R	T	ABC	No	15.12.3, 15.12.4, 15.19.6
Glutaraldehyde solutions (50% or less)	Y	S/P	3	2G	Open	No			NF	O	No	No	No	15.19.6
Glycerol monooleate	Y	P	2	2G	Open	No	-	-	Yes	O	No	A	No	15.19.6, 16.2.6, 16.2.9
Glycerol propoxylated	Z	S/P	3	2G	Cont	No	-	-	Yes	R	T	ABC	No	15.12.3, 15.12.4, 15.19.6
Glycerol, propoxylated and ethoxylated	Z	P	3	2G	Open	No	-	-	Yes	O	No	ABC	No	
Glycerol/sucrose blend propoxylated and ethoxylated	Z	P	3	2G	Open	No	-	-	Yes	O	No	ABC	No	

a	c	d	e	f	g	h	i'	i''	i'''	j	k	l	n	o
Glyceryl triacetate	Z	P	3	2G	Open	No			Yes	O	No	AB	No	
Glycidyl ester of C10 trialkylacetic acid	Y	P	2	2G	Open	No			Yes	O	No	A	No	15.19.6
Glycine, sodium salt solution	Z	P	3	2G	Open	No			Yes	O	No	A	No	
Glycolic acid solution (70% or less)	Z	S/P	3	2G	Open	No	-	-	NF	O	No	No	No	15.19.6, 16.2.9
Glyoxal solution (40% or less)	Y	P	3	2G	Open	No			Yes	O	No	A	No	15.19.6, 16.2.9
Glyoxylic acid solution (50 % or less)	Y	S/P	3	2G	Open	No	-	-	Yes	O	No	ACD	No	15.11.2, 15.11.3, 15.11.4, 15.11.6, 15.11.7, 15.11.8, 15.19.6, 16.2.9, 16.6.1, 16.6.2, 16.6.3
Glyphosate solution (not containing surfactant)	Y	P	2	2G	Open	No			Yes	O	No	A	No	15.19.6, 16.2.9
Groundnut oil	Y	P	2 (k)	2G	Open	No	-	-	Yes	O	No	ABC	No	15.19.6, 16.2.6, 16.2.9
Heptane (all isomers)	X	P	2	2G	Cont	No			No	R	F	A	No	15.19.6, 16.2.9
n-Heptanoic acid	Z	P	3	2G	Open	No			Yes	O	No	AB	No	
Heptanol (all isomers) (d)	Y	P	3	2G	Cont	No			No	R	F	A	No	15.19.6
Heptene (all isomers)	Y	P	3	2G	Cont	No			No	R	F	A	No	15.19.6
Heptyl acetate	Y	P	2	2G	Open	No			Yes	O	No	A	No	15.19.6
1-Hexadecylnaphthalene / 1,4-bis(hexadecyl)naphthalene mixture	Y	P	2	2G	Open	No			Yes	O	No	AB	No	15.19.6, 16.2.6
Hexamethylenediamine adipate (50% in water)	Z	P	3	2G	Open	No			Yes	O	No	A	No	
Hexamethylenediamine (molten)	Y	S/P	2	2G	Cont	No			Yes	C	T	C	Yes	15.12, 15.17, 15.18, 15.19.6, 16.2.9
Hexamethylenediamine solution	Y	S/P	3	2G	Cont	No			Yes	R	T	A	No	15.19.6
Hexamethylene diisocyanate	Y	S/P	2	1G	Cont	Dry	T1	IIB	Yes	C	T	AC(b) D	Yes	15.12, 15.17, 15.16.2, 15.18, 15.19
Hexamethylene glycol	Z	P	3	2G	Open	No			Yes	O	No	A	No	
Hexamethyleneimine	Y	S/P	2	2G	Cont	No			No	R	F-T	AC	No	15.19.6
Hexane (all isomers)	Y	P	2	2G	Cont	No			No	R	F	A	No	15.19.6
1,6-Hexanediol, distillation overheads	Y	P	3	2G	Open	No	-	-	Yes	O	No	A	No	15.12.3, 15.12.4, 15.19.6, 16.2.9
Hexanoic acid	Y	P	3	2G	Open	No			Yes	O	No	AB	No	15.19.6
Hexanol	Y	P	3	2G	Open	No			Yes	O	No	AB	No	15.19.6
Hexene (all isomers)	Y	P	3	2G	Cont	No			No	R	F	A	No	15.19.6
Hexyl acetate	Y	P	2	2G	Cont	No			No	R	F	A	No	15.19.6
Hydrochloric acid	Z	S/P	3	1G	Cont	No			NF	R	T	No	Yes	15.11

a	c	d	e	f	g	h	i'	i''	i'''	j	k	l	n	o
Hydrogen peroxide solutions (over 60% but not over 70% by mass)	Y	S/P	2	2G	Cont	No			NF	C	No	No	No	15.5.1, 15.19.6
Hydrogen peroxide solutions (over 8% but not over 60% by mass)	Y	S/P	3	2G	Cont	No			NF	C	No	No	No	15.5.2, 15.18, 15.19.6
2-Hydroxyethyl acrylate	Y	S/P	2	2G	Cont	No			Yes	C	T	A	No	15.12, 15.13, 15.19.6, 16.6.1, 16.6.2
N-(Hydroxyethyl)ethylenediaminetriacetic acid, trisodium salt solution	Y	P	3	2G	Open	No			Yes	O	No	A	No	15.19.6
2-Hydroxy-4-(methylthio)butanoic acid	Z	P	3	2G	Open	No			Yes	O	No	A	No	
Illipe oil	Y	P	2 (k)	2G	Open	No	-	-	Yes	O	No	ABC	No	15.19.6, 16.2.6, 16.2.9
Isoamyl alcohol	Z	P	3	2G	Cont	No			No	R	F	AB	No	
Isobutyl alcohol	Z	P	3	2G	Cont	No			No	R	F	AB	No	
Isobutyl formate	Z	P	3	2G	Cont	No			No	R	F	AB	No	
Isobutyl methacrylate	Z	P	3	2G	Cont	No	-	-	No	R	F	A	No	15.12, 15.13, 15.17, 16.6.1, 16.6.2
Isophorone	Y	S/P	3	2G	Cont	No			Yes	R	No	A	No	15.19.6
Isophoronediamine	Y	S/P	3	2G	Cont	No			Yes	R	T	A	No	16.2.9
Isophorone diisocyanate	X	S/P	2	2G	Cont	Dry			Yes	C	T	ABD	No	15.12, 15.16.2, 15.17, 15.19.6
Isoprene	Y	S/P	3	2G	Cont	No	T3	IIB	No	R	F	B	No	15.13, 15.14, 15.19.6, 16.6.1, 16.6.2
Isopropanolamine	Y	S/P	3	2G	Open	No	T2	IIA	Yes	O	F-T	A	No	16.2.9, 15.19.6, 16.2.6
Isopropyl acetate	Z	P	3	2G	Cont	No			No	R	F	AB	No	
Isopropylamine	Y	S/P	2	2G	Cont	No	T2	IIA	No	C	F-T	CD	Yes	15.12, 15.14, 15.19
Isopropylamine (70% or less) solution	Y	S/P	2	2G	Cont	No			No	C	F-T	CD	Yes	15.12, 15.19.6, 16.2.9
Isopropylcyclohexane	Y	P	2	2G	Cont	No			No	R	F	A	No	15.19.6, 16.2.9
Isopropyl ether	Y	S/P	3	2G	Cont	Inert			No	R	F	A	No	15.4.6, 15.13.3, 15.19.6
Lactic acid	Z	P	3	2G	Open	No			Yes	O	No	A	No	
Lactonitrile solution (80% or less)	Y	S/P	2	1G	Cont	No			Yes	C	T	ACD	Yes	15.12, 15,13, 15.17, 15.18, 15.19, 16.6.1, 16.2.2, 16.6.3
Lard	Y	S/P	2 (k)	2G	Open	No	-	-	Yes	O	No	ABC	No	15.19.6, 16.2.6, 16.2.9
Latex, ammonia (1% or less), inhibited	Y	S/P	3	2G	Open	No	-	-	Yes	O	No	A	No	15.19.6, 16.2.6, 16.2.9
Latex: Carboxylated styrene-Butadiene copolymer; Styrene-Butadiene rubber	Z	P	3	2G	Open	No	-	-	Yes	O	No	A	No	16.2.9
Lauric acid	X	P	2	2G	Open	No			Yes	O	No	A	No	15.19.6, 16.2.6, 16.2.9
Ligninsulphonic acid, sodium salt solution	Z	P	3	2G	Open	No	-	-	Yes	O	No	A	No	16.2.9

a	c	d	e	f	g	h	i'	i''	i'''	j	k	l	n	o
Linseed oil	Y	S/P	2 (k)	2G	Open	No	-	-	Yes	O	No	ABC	No	15.19.6, 16.2.6, 16.2.9
Liquid chemical wastes	X	S/P	2	2G	Cont	No			No	C	F-T	A	Yes	15.12, 15.19.6, 20.5.1
Long-chain alkaryl polyether (C11-C20)	Y	P	2	2G	Open	No			Yes	O	No	AB	No	15.19.6, 16.2.6, 16.2.6, 16.2.9
Long-chain alkaryl sulphonic acid (C16-C60)	Y	P	2	2G	Open	No	-	-	Yes	O	No	A	No	15.19.6, 16.2.9
Long-chain alkylphenate/Phenol sulphide mixture	Y	P	2	2G	Open	No	-	-	Yes	O	No	A	No	15.19.6, 16.2.6, 16.2.9
L-Lysine solution (60% or less)	Z	P	3	2G	Open	No			Yes	O	No	A	No	
Magnesium chloride solution	Z	P	3	2G	Open	No			Yes	O	No	A	No	
Magnesium long-chain alkaryl sulphonate (C11-C50)	Y	P	2	2G	Open	No	-	-	Yes	O	No	A	No	15.19.6, 16.2.6, 16.2.9
Magnesium long-chain alkyl salicylate (C11+)	Y	P	2	2G	Open	No			Yes	O	No	AB	No	15.19.6, 16.2.6, 16.2.9
Maleic anhydride	Y	S/P	3	2G	Cont	No			Yes	R	No	AC(f)	No	16.2.9
Mango kernel oil	Y	P	2 (k)	2G	Open	No	-	-	Yes	O	No	ABC	No	15.19.6, 16.2.6, 16.2.9
Mercaptobenzothiazol, sodium salt solution	X	S/P	2	2G	Open	No			NF	O	No	No	No	15.19.6, 16.2.9
Mesityl oxide	Z	S/P	3	2G	Cont	No	T2	IIB	No	R	F-T	A	No	15.19.6
Metam sodium solution	X	S/P	1	2G	Open	No			NF	O	No	No	No	15.19, 16.2.9
Methacryclic acid - alkoxypoly (alkylene oxide) methacrylate copolymer, sodium salt aqueous solution (45% or less)	Z	S/P	3	2G	Open	No	-	-	NF	O	No	AC	No	16.2.9
Methacrylic acid	Y	S/P	3	2G	Cont	No			Yes	R	T	A	No	15.13, 16.6.1, 15.19.6, 16.2.9
Methacrylic resin in ethylene dichloride	Y	S/P	2	2G	Cont	No	T2	IIA	No	R	F-T	AB	No	15.19, 16.2.9
Methacrylonitrile	Y	S/P	2	2G	Cont	No			No	C	F-T	A	Yes	15.12, 15.13, 15.17, 15.19
3-Methoxy-1-butanol	Z	P	3	2G	Cont	No			No	R	F	A	No	
3-Methoxybutyl acetate	Y	P	3	2G	Open	No			Yes	O	No	AB	No	15.19.6
N-(2-Methoxy-1-methyl ethyl)-2-ethyl-6-methyl chloroacetanilide	X	P	1	2G	Open	No			Yes	O	No	A	No	15.19, 16.2.6
Methyl acetate	Z	P	3	2G	Cont	No			No	R	F	A	No	
Methyl acetoacetate	Z	P	3	2G	Open	No			Yes	O	No	A	No	
Methyl acrylate	Y	S/P	2	2G	Cont	No	T1	IIB	No	R	F-T	A	Yes	15.13, 15.19.6, 16.6.1, 16.6.2
Methyl alcohol	Y	P	3	2G	Cont	No			No	R	F	A	No	15.19.6
Methylamine solutions (42% or less)	Y	S/P	2	2G	Cont	No			No	C	F-T	ACD	Yes	15.12, 15.17, 15.19
Methylamyl acetate	Y	P	2	2G	Cont	No			No	R	F	A	No	15.19.6

a	c	d	e	f	g	h	i'	i''	i'''	j	k	l	n	o
Methylamyl alcohol	Z	P	3	2G	Cont	No			No	R	F	A	No	15.19.6
Methyl amyl ketone	Z	P	3	2G	Cont	No			No	R	F	A	No	15.19.6
Methylbutenol	Y	P	3	2G	Cont	No			No	R	F	A	No	15.19.6, 16.2.9
Methyl tert-butyl ether	Z	P	3	2G	Cont	No			No	R	F	AB	No	
Methyl butyl ketone	Y	P	3	2G	Cont	No			No	R	F	AB	No	15.19.6
Methylbutynol	Z	P	3	2G	Cont	No			No	R	F	A	No	
Methyl butyrate	Y	P	3	2G	Cont	No			No	R	F	A	No	15.19.6
Methylcyclohexane	Y	P	2	2G	Cont	No			No	R	F	A	No	15.19.6
Methylcyclopentadiene dimer	Y	P	2	2G	Cont	No			No	R	F	B	No	15.19.6
Methylcyclopentadienyl manganese tricarbonyl	X	S/P	1	1G	Cont	No	-	-	Yes	C	T	ABCD	Yes	15.12, 15.18, 15.19, 16.2.9
Methyl diethanolamine	Y	S/P	3	2G	Open	No			Yes	O	No	A	No	15.19.6, 16.2.6
2-Methyl-6-ethyl aniline	Y	S/P	3	2G	Open	No			Yes	O	No	AD	No	15.19.6
Methyl ethyl ketone	Z	P	3	2G	Cont	No			No	R	F	A	No	
2-Methyl-5-ethyl pyridine	Y	S/P	3	2G	Open	No		IIA	Yes	O	No	AD	No	15.19.6
Methyl formate	Z	S/P	2	2G	Cont	No			No	R	F-T	A	Yes	15.12, 15.14, 15.19
2-Methyl-2-hydroxy-3-butyne	Z	S/P	3	2G	Cont	No		IIA	No	R	F-T	ABD	No	15.19.6, 16.2.9
Methyl isobutyl ketone	Z	P	3	2G	Cont	No			No	R	F	AB	No	
Methyl methacrylate	Y	S/P	2	2G	Cont	No	T2	IIA	No	R	F-T	A	No	15.13, 15.19.6, 16.6.1, 16.6.2
3-Methyl-3-methoxybutanol	Z	P	3	2G	Open	No			Yes	O	No	A	No	
Methyl naphthalene (molten)	X	S/P	2	2G	Cont	No			Yes	R	No	AD	No	15.19.6
2-Methyl-1,3-propanediol	Z	P	3	2G	Open	No	-	-	Yes	O	No	A	No	
2-Methylpyridine	Z	S/P	2	2G	Cont	No			No	C	F	A	No	15.12.3, 15.19.6
3-Methylpyridine	Z	S/P	2	2G	Cont	No			No	C	F	AC	No	15.12.3, 15.19
4-Methylpyridine	Z	S/P	2	2G	Cont	No			No	C	F-T	A	No	15.12.3, 15.19, 16.2.9
N-Methyl-2-pyrrolidone	Y	P	3	2G	Open	No			Yes	O	No	A	No	15.19.6
Methyl salicylate	Y	P	3	2G	Open	No			Yes	O	No	A	No	15.19.6
alpha-Methylstyrene	Y	S/P	2	2G	Cont	No	T1	IIB	No	R	F-T	AD(j)	No	15.13, 15.19.6, 16.6.1, 16.6.2
3-(methylthio)propionaldehyde	Y	S/P	2	2G	Cont	No	T3	IIA	No	C	F-T	BC	Yes	15.12, 15.17, 15.19

a	c	d	e	f	g	h	i'	i''	i'''	j	k	l	n	o
Molybdenum Polysulfide Long Chain Alkyl Dithiocarbamide Complex.	Y	S/P	2	2G	Cont	No	-	-	Yes	C	T	ABC	Yes	15.12, 15.17, 15.19, 16.2.6, 16.2.9
Morpholine	Y	S/P	3	2G	Cont	No	T2	IIA	No	R	F	A	No	15.19.6
Motor fuel anti-knock compounds (containing lead alkyls)	X	S/P	1	1G	Cont	No	T4	IIA	No	C	F-T	AC	Yes	15.6, 15.12, 15.18, 15.19
Myrcene	X	P	2	2G	Cont	No	-	-	No	R	F	A	No	15.19.6, 16.2.9
Naphthalene (molten)	X	S/P	2	2G	Cont	No	T1	IIA	Yes	R	No	AD	No	15.19.6, 16.2.9
Naphthalenesulphonic acid-Formaldehyde copolymer, sodium salt solution	Z	P	3	2G	Open	No	-	-	Yes	O	No	A	No	16.2.9
Neodecanoic acid	Y	P	2	2G	Open	No			Yes	O	No	A	No	15.19.6
Nitrating acid (mixture of sulphuric and nitric acids)	Y	S/P	2	2G	Cont	No			NF	C	T	No	Yes	15.11, 15.16.2, 15.17, 15.19
Nitric acid (70% and over)	Y	S/P	2	2G	Cont	No			NF	C	T	No	Yes	15.11, 15.19
Nitric acid (less than 70%)	Y	S/P	2	2G	Cont	No			NF	R	T	No	Yes	15.11, 15.19
Nitrilotriacetic acid, trisodium salt solution	Y	P	3	2G	Open	No			Yes	O	No	A	No	15.19.6
Nitrobenzene	Y	S/P	2	2G	Cont	No	T1	IIA	Yes	C	T	AD	No	15.12, 15.17, 15.18, 15.19, 16.2.9
Nitroethane	Y	S/P	3	2G	Cont	No		IIB	No	R	F-T	A(f)	No	15.19.6, 16.6.1, 16.6.2, 16.6.4
Nitroethane(80%)/ Nitropropane(20%)	Y	S/P	3	2G	Cont	No		IIB	No	R	F-T	A(f)	No	15.19.6, 16.6.1, 16.6.2, 16.6.3
Nitroethane, 1-Nitropropane (each 15% or more) mixture	Y	S/P	3	2G	Cont	No	-	-	No	R	F	A	No	15.19.6, 16.2.6, 16.6.1, 16.6.2, 16.6.3
o-Nitrophenol (molten)	Y	S/P	2	2G	Cont	No			Yes	C	T	AD	No	15.12, 15.19.6, 16.2.6, 16.2.9
1- or 2-Nitropropane	Y	S/P	3	2G	Cont	No	T2	IIB	No	R	F-T	A	No	15.19.6
Nitropropane (60%)/Nitroethane (40%) mixture	Y	S/P	3	2G	Cont	No			No	R	F-T	A(f)	No	15.19.6
o- or p-Nitrotoluenes	Y	S/P	2	2G	Cont	No		IIB	Yes	C	T	AB	No	15.12, 15.17, 15.19.6
Nonane (all isomers)	X	P	2	2G	Cont	No			No	R	F	BC	No	15.19.6
Nonanoic acid (all isomers)	Y	P	3	2G	Open	No			Yes	O	No	AB	No	15.19.6, 16.2.9
Nonene (all isomers)	Y	P	2	2G	Cont	No			No	R	F	A	No	15.19.6
Nonyl alcohol (all isomers)	Y	P	2	2G	Open	No			Yes	O	No	A	No	15.19.6
Nonyl methacrylate monomer	Y	P	2	2G	Open	No			Yes	O	No	AB	No	15.19.6, 16.2.9
Nonylphenol	X	P	1	2G	Open	No			Yes	O	No	A	No	15.19, 16.2.6, 16.2.9
Nonylphenol poly(4+)ethoxylate	Y	P	2	2G	Open	No	-	-	Yes	O	No	A	No	15.19.6, 16.2.6
Noxious liquid, NF, (1) n.o.s. (trade name ...., contains ....) ST1, Cat. X	X	P	1	2G	Open	No	-	-	Yes	O	No	A	No	15.19, 16.2.6
Noxious liquid, F, (2) n.o.s. (trade name ...., contains ....) ST1, Cat. X	X	P	1	2G	Cont	No	T3	IIA	No	R	F	A	No	15.19, 16.2.6

a	c	d	e	f	g	h	i'	i''	i'''	j	k	l	n	o
Noxious liquid, NF, (3) n.o.s. (trade name ...., contains ....) ST2, Cat. X	X	P	2	2G	Open	No	-		Yes	O	No	A	No	15.19, 16.2.6
Noxious liquid, F, (4) n.o.s. (trade name ...., contains ....) ST2, Cat. X	X	P	2	2G	Cont	No	T3	IIA	No	R	F	A	No	15.19, 16.2.6
Noxious liquid, NF, (5) n.o.s. (trade name ...., contains ....) ST2, Cat. Y	Y	P	2	2G	Open	No	-		Yes	O	No	A	No	15.19, 16.2.6, 16.2.9(l)
Noxious liquid, F, (6) n.o.s. (trade name ...., contains ....) ST2, Cat. Y	Y	P	2	2G	Cont	No	T3	IIA	No	R	F	A	No	15.19, 16.2.6, 16.2.9(l)
Noxious liquid, NF, (7) n.o.s. (trade name ...., contains ....) ST3, Cat. Y	Y	P	3	2G	Open	No	-	-	Yes	O	No	A	No	15.19, 16.2.6, 16.2.9(l)
Noxious liquid, F, (8) n.o.s. (trade name ...., contains ....) ST3, Cat. Y	Y	P	3	2G	Cont	No	T3	IIA	No	R	F	A	No	15.19, 16.2.6, 16.2.9(l)
Noxious liquid, NF, (9) n.o.s. (trade name ...., contains ....) ST3, Cat. Z	Z	P	3	2G	Open	No	-		Yes	O	No	A	No	
Noxious liquid, F, (10) n.o.s. (trade name ...., contains ....) ST3, Cat. Z	Z	P	3	2G	Cont	No	T3	IIA	No	R	F	A	No	
Octane (all isomers)	X	P	2	2G	Cont	No			No	R	F	A	No	15.19.6
Octanoic acid (all isomers)	Y	P	3	2G	Open	No	-	-	Yes	O	No	A	No	15.19.6
Octanol (all isomers)	Y	P	2	2G	Open	No			Yes	O	No	A	No	
Octene (all isomers)	Y	P	2	2G	Cont	No			No	R	F	A	No	15.19.6
n-Octyl acetate	Y	P	3	2G	Open	No			Yes	O	No	A	No	15.19.6, 16.2.9
Octyl aldehydes	Y	P	3	2G	Cont	No	-	-	No	R	F	A	No	15.19.6, 16.2.9
Octyl decyl adipate	Y	P	2	2G	Open	No	-	-	Yes	O	No	A	No	15.19.6, 16.2.9
Olefin-Alkyl ester copolymer (molecular weight 2000+)	Y	P	2	2G	Open	No			Yes	O	No	AB	No	15.19.6, 16.2.6, 16.2.9
Olefin mixtures (C5-C7)	Y	P	3	2G	Cont	No			No	R	F	A	No	15.19.6
Olefin mixtures (C5-C15)	X	P	2	2G	Cont	No			No	R	F	A	No	15.19.6
Olefins (C13+, all isomers)	Y	P	2	2G	Open	No			Yes	O	No	AB	No	15.19.6, 16.2.9
alpha-Olefins (C6-C18) mixtures	X	P	2	2G	Cont	No			No	R	F	A	No	15.19.6, 16.2.9
Oleic acid	Y	P	2	2G	Open	No			Yes	O	No	AB	No	15.19.6, 16.2.9
Oleum	Y	S/P	2	2G	Cont	No			NF	C	T	No	Yes	15.11.2 to 15.11.8, 15.12.1, 15.16.2, 15.17, 15.19, 16.2.6
Oleylamine	X	S/P	2	2G	Cont	No			Yes	R	T	A	No	15.19.6, 16.2.9
Olive oil	Y	S/P	2 (k)	2G	Open	No	-	-	Yes	O	No	ABC	No	15.19.6, 16.2.6, 16.2.9
Oxygenated aliphatic hydrocarbon mixture	Z	S/P	3	2G	Open	No	-	-	Yes	O	No	ABC	No	
Palm acid oil	Y	S/P	2	2G	Open	No	-	-	Yes	O	No	ABC	No	15.19.6, 16.2.6, 16.2.9
Palm fatty acid distillate	Y	S/P	2	2G	Open	No	-	-	Yes	O	No	ABC	No	15.19.6, 16.2.6, 16.2.9

a	c	d	e	f	g	h	i'	i''	i'''	j	k	l	n	o
Palm kernel acid oil	Y	S/P	2	2G	Open	No			Yes	O	No	ABC	No	16.2.9, 15.19.6, 16.2.6
Palm kernel oil	Y	S/P	2 (k)	2G	Open	No	-	-	Yes	O	No	AB	No	15.19.6, 16.2.6, 16.2.9
Palm kernel olein	Y	P	2 (k)	2G	Open	No	-	-	Yes	O	No	ABC	No	15.19.6, 16.2.6, 16.2.9
Palm kernel stearin	Y	P	2 (k)	2G	Open	No	-	-	Yes	O	No	ABC	No	15.19.6, 16.2.6, 16.2.9
Palm mid fraction	Y	P	2(k)	2G	Open	No	-	-	Yes	O	No	ABC	No	15.19.6, 16.2.6, 16.2.9
Palm oil	Y	S/P	2 (k)	2G	Open	No	-	-	Yes	O	No	ABC	No	15.19.6, 16.2.6, 16.2.9
Non-edible industrial grade palm oil	Y	S/P	2	2G	Cont	No	-	-	Yes	R	No	ABC	No	15.12.3, 15.12.4, 15.19.6, 16.2.6, 16.2.9
Palm oil fatty acid methyl ester	Y	P	2	2G	Open	No	-	-	Yes	O	No	A	No	15.19.6, 16.2.9
Palm olein	Y	P	2 (k)	2G	Open	No	-	-	Yes	O	No	ABC	No	15.19.6, 16.2.6, 16.2.9
Palm stearin	Y	P	2 (k)	2G	Open	No	-	-	Yes	O	No	ABC	No	15.19.6, 16.2.6, 16.2.9
Paraffin wax	Y	P	2	2G	Open	No			Yes	O	No	AB	No	15.19.6, 16.2.6, 16.2.9
Paraldehyde	Z	S/P	3	2G	Cont	No	T3	IIB	No	R	F	A	No	15.19.6, 16.2.9
Paraldehyde-ammonia reaction product	Y	S/P	2	2G	Cont	No			No	C	F-T	A	No	15.12.3, 15.19
Pentachloroethane	Y	S/P	2	2G	Cont	No			NF	R	T	No	No	15.12, 15.17, 15.19.6
1,3-Pentadiene	Y	P	3	2G	Cont	No			No	R	F-T	AB	No	15.13, 15.19.6, 16.6.1, 16.6.2, 16.6.3
Pentaethylenehexamine	X	S/P	2	2G	Open	No		Yes	Yes	O	No	B	Yes	15.19
Pentane (all isomers)	Y	P	3	2G	Cont	No			No	R	F	A	No	15.14, 15.19.6
Pentanoic acid	Y	P	3	2G	Open	No			Yes	O	No	AB	No	15.19.6
n-Pentanoic acid (64%)/2-Methyl butyric acid (36%) mixture	Y	S/P	2	2G	Open	No	T2		Yes	C	No	AD	No	15.11.2, 15.11.3, 15.11.4, 15.11.6, 15.11.7, 15.11.8, 15.12.3, 15.19
Pentene (all isomers)	Y	P	3	2G	Cont	No			No	R	F	A	No	15.14, 15.19.6
n-Pentyl propionate	Y	P	3	2G	Cont	No			No	R	F	A	No	15.19.6
Perchloroethylene	Y	S/P	2	2G	Cont	No			NF	R	T	No	No	15.12.1, 15.12.2, 15.19.6
Petrolatum	Y	P	2	2G	Open	No	-	-	Yes	O	No	A	No	15.19.6, 16.2.6, 16.2.9
Phenol	Y	S/P	2	2G	Cont	No	T1	IIA	Yes	C	T	A	No	15.12, 15.19, 16.2.9
1-Phenyl-1-xylyl ethane	Y	P	3	2G	Open	No			Yes	O	No	AB	No	
Phosphate esters, alkyl (C12-C14) amine	Y	P	2	2G	Cont	No	-	-	No	R	F	A	No	15.19.6, 16.2.6, 16.2.9
Phosphoric acid	Z	S/P	3	2G	Open	No			NF	O	No	No	No	15.11.1, 15.11.2, 15.11.3, 15.11.4, 15.11.6, 15.11.7, 15.11.8, 16.2.9

a	c	d	e	f	g	h	i'	i''	i'''	j	k	l	n	o
Phosphorus, yellow or white	X	S/P	1	1G	Cont	Pad+(vent or inert)			No(c)	C	No	C	Yes	15.7, 15.19, 16.2.9
Phthalic anhydride (molten)	Y	S/P	2	2G	Cont	No	T1	IIA	Yes	R	No	AD	No	16.2.9, 15.19.6, 16.2.6
alpha-Pinene	X	P	2	2G	Cont	No			No	R	F	A	No	15.19.6
beta-Pinene	X	P	2	2G	Cont	No			No	R	F	A	No	15.19.6
Pine oil	X	P	2	2G	Open	No			Yes	O	No	A	No	15.19.6, 16.2.6, 16.2.6, 16.2.9
Polyacrylic acid solution (40% or less)	Z	S/P	3	2G	Open	No	-	-	Yes	O	No	AC	No	
Polyalkyl (C18-C22) acrylate in xylene	Y	P	2	2G	Cont	No			No	R	F	AB	No	15.19.6, 16.2.6,16.2.9
Poly(2-8)alkylene glycol monoalkyl(C1-C6) ether	Z	P	3	2G	Open	No	-	-	Yes	O	No	A	No	
Poly(2-8)alkylene glycol monoalkyl (C1-C6) ether acetate	Y	P	2	2G	Open	No	-	-	Yes	O	No	A	No	15.19.6
Polyalkyl (C10-C20) methacrylate	Y	P	2	2G	Open	No			Yes	O	No	AB	No	15.19.6, 16.2.6, 16.2.9
Polyalkyl (C10-C18) methacrylate/ethylene-propylene copolymer mixture	Y	P	2	2G	Open	No			Yes	O	No	AB	No	15.19.6, 16.2.6, 16.2.9
Polybutene	Y	P	2	2G	Open	No	-	-	Yes	O	No	A	No	15.19.6, 16.2.6
Polybutenyl succinimide	Y	P	2	2G	Open	No	-	-	Yes	O	No	A	No	15.19.6, 16.2.6, 16.2.9
Poly(2+)cyclic aromatics	X	P	1	2G	Cont	No			Yes	R	No	AD	No	15.19, 16.2.6, 16.2.9
Polyether (molecular weight 1350+)	Y	P	2	2G	Open	No	-	-	Yes	O	No	A	No	15.19.6, 16.2.6
Polyethylene glycol	Z	P	3	2G	Open	No			Yes	O	No	A	No	
Polyethylene glycol dimethyl ether	Z	P	3	2G	Open	No			Yes	O	No	A	No	
Polyethylene polyamines	Y	S/P	2	2G	Open	No	-	-	Yes	O	No	A	No	15.19.6
Polyethylene polyamines (more than 50% C5 -C20 paraffin oil)	Y	S/P	2	2G	Open	No			Yes	O	No	A	No	16.2.9, 15.19.6
Polyferric sulphate solution	Y	S/P	3	2G	Open	No			NF	O	No	No	No	15.19.6
Poly(iminoethylene)-graft-N-poly(ethyleneoxy) solution (90% or less)	Z	S/P	3	2G	Open	No	-	-	NF	O	No	AC	No	16.2.9
Polyisobutenamine in aliphatic (C10-C14) solvent	Y	P	3	2G	Open	No	T3	IIA	Yes	O	No	A	No	15.19.6
Polyisobutenyl anhydride adduct	Z	P	3	2G	Open	No			Yes	O	No	AB	No	
Poly(4+)isobutylene	Y	P	2	2G	Open	No			Yes	O	No	AB	No	15.19.6, 16.2.9
Polymethylene polyphenyl isocyanate	Y	S/P	2	2G	Cont	Dry			Yes(a)	C	T(a)	A	No	15.12, 15.16.2, 15.19.6, 16.2.9
Polyolefin (molecular weight 300+)	Y	S/P	2	2G	Open	No	-	-	Yes	O	No	A	No	15.19.6, 16.2.6, 16.2.9
Polyolefin amide alkeneamine (C17+)	Y	P	2	2G	Open	No			Yes	O	No	AB	No	15.19.6, 16.2.6

a	c	d	e	f	g	h	i'	i''	i'''	j	k	l	n	o
Polyolefin amide alkeneamine borate (C28-C250)	Y	P	2	2G	Open	No			Yes	O	No	AB	No	15.19.6, 16.2.6, 16.2.9
Polyolefinamine (C28-C250)	Y	P	2	2G	Open	No			Yes	O	No	A	No	15.19.6, 16.2.9
Polyolefinamine in alkyl (C2-C4) benzenes	Y	P	2	2G	Cont	No			No	R	F	A	No	15.19.6, 16.2.6, 16.2.9
Polyolefinamine in aromatic solvent	Y	P	2	2G	Cont	No			No	R	F	A	No	15.19.6, 16.2.6, 16.2.9
Polyolefin aminoester salts (molecular weight 2000+)	Y	P	2	2G	Open	No	-	-	Yes	O	No	A	No	15.19.6, 16.2.6, 16.2.9
Polyolefin anhydride	Y	P	2	2G	Open	No			Yes	O	No	AB	No	15.19.6, 16.2.6, 16.2.9
Polyolefin ester (C28-C250)	Y	P	2	2G	Open	No			Yes	O	No	AB	No	15.19.6, 16.2.6, 16.2.9
Polyolefin phenolic amine (C28-C250)	Y	P	2	2G	Open	No			Yes	O	No	AB	No	15.19.6, 16.2.6, 16.2.9
Polyolefin phosphorosulphide, barium derivative (C28-C250)	Y	P	2	2G	Open	No			Yes	O	No	AB	No	15.19.6, 16.2.6, 16.2.9
Poly(20)oxyethylene sorbitan monooleate	Y	P	2	2G	Open	No			Yes	O	No	A	No	15.19.6, 16.2.6, 16.2.9
Poly(5+)propylene	Y	P	3	2G	Open	No	-	-	Yes	O	No	A	No	15.19.6, 16.2.9
Polypropylene glycol	Z	S/P	3	2G	Cont	No			Yes	O	No	ABC	No	15.19.6
Polysiloxane	Y	P	3	2G	Cont	No			No	R	F	AB	No	15.19.6, 16.2.9
Potassium chloride solution	Z	S/P	3	2G	Open	No	-	-	NF	O	No	A	No	16.2.9
Potassium hydroxide solution	Y	S/P	3	2G	Open	No			NF	O	No	No	No	15.19.6
Potassium oleate	Y	P	2	2G	Open	No			Yes	O	No	A	No	15.19.6, 16.2.6, 16.2.9
Potassium thiosulphate (50% or less)	Y	P	3	2G	Open	No			NF	O	No	No	No	15.19.6, 16.2.9
n-Propanolamine	Y	S/P	3	2G	Open	No			Yes	O	No	AD	No	16.2.9, 15.19.6
beta-Propiolactone	Y	S/P	2	2G	Cont	No		IIA	Yes	R	T	A	No	15.19.6
Propionaldehyde	Y	S/P	3	2G	Cont	No			No	R	F-T	A	Yes	15.17, 15.19.6
Propionic acid	Y	S/P	3	2G	Cont	No	T1	IIA	No	R	F	A	Yes	15.11.2, 15.11.3, 15.11.4, 15.11.6, 15.11.7, 15.11.8, 15.19.6
Propionic anhydride	Y	S/P	3	2G	Cont	No	T2	IIA	Yes	R	T	A	No	15.19.6
Propionitrile	Y	S/P	2	1G	Cont	No	T1	IIB	No	C	F-T	AD	Yes	15.12, 15.17, 15.18, 15.19
n-Propyl acetate	Y	P	3	2G	Cont	No			No	R	F	AB	No	15.19.6
n-Propyl alcohol	Y	P	3	2G	Cont	No			No	R	F	A	No	15.19.6
n-Propylamine	Z	S/P	2	2G	Cont	Inert	T2	IIA	No	C	F-T	AD	Yes	15.12, 15.19
Propylbenzene (all isomers)	Y	P	3	2G	Cont	No			No	R	F	A	No	15.19.6

a	c	d	e	f	g	h	i'	i''	i'''	j	k	l	n	o
Propylene glycol methyl ether acetate	Z	P	3	2G	Cont	No			No	R	F	A	No	
Propylene glycol monoalkyl ether	Z	P	3	2G	Cont	No			No	R	F	AB	No	
Propylene glycol phenyl ether	Z	P	3	2G	Open	No			Yes	O	No	AB	No	
Propylene oxide	Y	S/P	2	2G	Cont	Inert	T2	IIB	No	C	F-T	AC	No	15.8, 15.12.1, 15.14, 15.19
Propylene tetramer	X	P	2	2G	Cont	No			No	R	F	A	No	15.19.6
Propylene trimer	Y	P	2	2G	Cont	No			No	R	F	A	No	15.19.6
Pyridine	Y	S	3	2G	Cont	No	T1	IIA	No	R	F	A	No	15.19.6
Pyrolysis gasoline (containing benzene)	Y	S/P	2	2G	Cont	No	T3	IIA	No	C	F-T	AB	No	15.12, 15.17, 15.19.6
Rapeseed oil	Y	S/P	2 (k)	2G	Open	No	-	-	Yes	O	No	ABC	No	15.19.6, 16.2.6, 16.2.9
Rape seed oil fatty acid methyl esters	Y	P	2	2G	Open	No	-	-	Yes	O	No	A	No	15.19.6
Rice bran oil	Y	S/P	2 (k)	2G	Open	No	-	-	Yes	O	No	ABC	No	15.19.6, 16.2.6, 16.2.9
Rosin	Y	P	2	2G	Open	No			Yes	O	No	A	No	15.19.6, 16.2.6, 16.2.9
Safflower oil	Y	S/P	2 (k)	2G	Open	No	-	-	Yes	O	No	ABC	No	15.19.6, 16.2.6, 16.2.9
Shea butter	Y	S/P	2(k)	2G	Open	No	-	-	Yes	O	No	ABC	No	15.19.6, 16.2.6, 16.2.9
Sodium alkyl (C14-C17) sulphonates (60-65% solution)	Y	P	2	2G	Open	No			NF	O	No	No	No	15.19.6, 16.2.6, 16.2.9
Sodium aluminosilicate slurry	Z	P	3	2G	Open	No			Yes	O	No	AB	No	
Sodium benzoate	Z	P	3	2G	Open	No			Yes	O	No	A	No	
Sodium borohydride (15% or less)/Sodium hydroxide solution	Y	S/P	3	2G	Open	No			NF	O	No	No	No	15.19.6, 16.2.6, 16.2.9
Sodium carbonate solution	Z	P	3	2G	Open	No			Yes	O	No	A	No	
Sodium chlorate solution (50% or less)	Z	S/P	3	2G	Open	No			NF	O	No	No	No	15.9, 16.2.9
Sodium dichromate solution (70% or less)	Y	S/P	2	2G	Open	No			NF	C	No	No	No	15.12.3, 15.19
Sodium hydrogen sulphide (6% or less)/Sodium carbonate (3% or less) solution	Z	P	3	2G	Open	No			NF	O	No	No	No	15.19.6, 16.2.9
Sodium hydrogen sulphite solution (45% or less)	Z	S/P	3	2G	Open	No			NF	O	No	No	No	16.2.9
Sodium hydrosulphide/Ammonium sulphide solution	Y	S/P	2	2G	Cont	No			No	C	F-T	A	Yes	15.12, 15.14, 15.17, 15.19, 16.6.1, 16.6.2, 16.6.3
Sodium hydrosulphide solution (45% or less)	Z	S/P	3	2G	Cont	Vent or pad (gas)			NF	R	T	No	No	15.19.6, 16.2.9
Sodium hydroxide solution	Y	S/P	3	2G	Open	No			NF	O	No	No	No	15.19.6, 16.2.6, 16.2.9
Sodium hypochlorite solution (15% or less)	Y	S/P	2	2G	Cont	No	-	-	NF	R	No	No	No	15.19.6

a	c	d	e	f	g	h	i'	i''	i'''	j	k	l	n	o
Sodium nitrite solution	Y	S/P	2	2G	Open	No			NF	O	No	No	No	15.12.3.1, 15.12.3.2, 15.19, 16.2.9
Sodium petroleum sulphonate	Y	S/P	2	2G	Open	No			Yes	O	No	A	No	15.19.6, 16.2.6
Sodium poly(4+)acrylate solutions	Z	P	3	2G	Open	No	-	-	Yes	O	No	A	No	16.2.9
Sodium silicate solution	Y	P	3	2G	Open	No			NF	O	No	No	No	15.19.6, 16.2.9
Sodium sulphide solution (15% or less)	Y	S/P	3	2G	Cont	No			NF	C	T	No	No	15.19.6, 16.2.9
Sodium sulphite solution (25% or less)	Y	P	3	2G	Open	No			NF	O	No	No	No	15.19.6, 16.2.9
Sodium thiocyanate solution (56% or less)	Y	P	3	2G	Open	No			Yes	O	No	No	No	15.19.6, 16.2.9
Soyabean oil	Y	S/P	2 (k)	2G	Open	No	-	-	Yes	O	No	ABC	No	15.19.6, 16.2.6, 16.2.9
Styrene monomer	Y	S/P	3	2G	Cont	No	T1	IIA	No	R	F	AB	No	15.13, 15.19.6, 16.6.1, 16.6.2
Sulphohydrocarbon (C3-C88)	Y	P	2	2G	Open	No	-	-	Yes	O	No	A	No	15.19.6, 16.2.6, 16.2.9
Sulpholane	Y	P	3	2G	Open	No			Yes	O	No	A	No	15.19.6, 16.2.9
Sulphur (molten)	Z	S	3	1G	Open	Vent or pad (gas)	T3		Yes	O	F-T	No	No	15.10, 16.2.9
Sulphuric acid	Y	S/P	3	2G	Open	No			NF	O	No	No	No	15.11, 15.16.2, 15.19.6
Sulphuric acid, spent	Y	S/P	3	2G	Open	No			NF	O	No	No	No	15.11, 15.16.2, 15.19.6
Sulphurized fat (C14-C20)	Z	P	3	2G	Open	No			Yes	O	No	AB	No	
Sulphurized polyolefinamide alkene (C28-C250) amine	Z	P	3	2G	Open	No	-	-	Yes	O	No	A	No	
Sunflower seed oil	Y	S/P	2 (k)	2G	Open	No	-	-	Yes	O	No	ABC	No	15.19.6, 16.2.6, 16.2.9
Tall oil, crude	Y	S/P	2	2G	Cont	No	-	-	Yes	C	T	ABC	Yes	15.12, 15.17, 15.19, 16.2.6
Tall oil, distilled	Y	P	2	2G	Open	No	-	-	Yes	O	No	ABC	No	15.19.6, 16.2.6
Tall oil fatty acid (resin acids less than 20%)	Y	S/P	2	2G	Open	No	-	-	Yes	O	No	ABC	No	15.19.6
Tall oil pitch	Y	S/P	2	2G	Cont	No	-	-	Yes	C	T	ABC	Yes	15.12, 15.17, 15.19,16.2.6, 16.2.9
Tallow	Y	P	2 (k)	2G	Open	No	-	-	Yes	O	No	ABC	No	15.19.6, 16.2.6, 16.2.9
Tallow fatty acid	Y	P	2	2G	Open	No	-	-	Yes	O	No	A	No	15.19.6, 16.2.6, 16.2.9
Tetrachloroethane	Y	S/P	2	2G	Cont	No			NF	R	T	No	No	15.12, 15.17, 15.19.6
Tetraethylene glycol	Z	P	3	2G	Open	No			Yes	O	No	A	No	
Tetraethylene pentamine	Y	S/P	2	2G	Open	No			Yes	O	No	A	No	15.19.6
Tetrahydrofuran	Z	S	3	2G	Cont	No	T3	IIB	No	R	F-T	A	No	15.19.6

a	c	d	e	f	g	h	i'	i''	i'''	j	k	l	n	o
Tetrahydronaphthalene	Y	P	2	2G	Open	No			Yes	O	No	A	No	15.19.6
Tetramethylbenzene (all isomers)	X	P	2	2G	Open	No			Yes	O	No	A	No	15.19.6, 16.2.9
Titanium dioxide slurry	Z	P	3	2G	Open	No			Yes	O	No	AB	No	
Toluene	Y	P	3	2G	Cont	No			No	R	F	A	No	15.19.6
Toluenediamine	Y	S/P	2	2G	Cont	No			Yes	C	T	AD	Yes	15.12, 15.17, 15.19, 16.2.9, 16.2.6
Toluene diisocyanate	Y	S/P	2	2G	Cont	Dry	T1	IIA	Yes	C	F-T	AC(b) D	Yes	15.12, 15.16.2, 15.17, 15.19, 16.2.9
o-Toluidine	Y	S/P	2	2G	Cont	No			Yes	C	T	A	No	15.12, 15.17, 15.19
Tributyl phosphate	Y	P	3	2G	Open	No			Yes	O	No	A	No	15.19.6
1,2,3-Trichlorobenzene (molten)	X	S/P	1	2G	Cont	No			Yes	C	T	ACD	Yes	15.12.1, 15.17, 15.19, 16.2.9, 16.2.6
1,2,4-Trichlorobenzene	X	S/P	1	2G	Cont	No			Yes	R	T	AB	No	15.19, 16.2.9
1,1,1-Trichloroethane	Y	P	3	2G	Open	No			Yes	O	No	A	No	15.19.6
1,1,2-Trichloroethane	Y	S/P	3	2G	Cont	No			NF	R	T	No	No	15.12.1, 15.19.6
Trichloroethylene	Y	S/P	2	2G	Cont	No	T2	IIA	Yes	R	T	No	No	15.12, 15.17, 15.19.6
1,2,3-Trichloropropane	Y	S/P	2	2G	Cont	No			Yes	C	T	ABD	No	15.12, 15.17, 15.19
1,1,2-Trichloro-1,2,2-Trifluoroethane	Y	P	2	2G	Open	No			NF	O	No	No	No	15.19.6
Tricresyl phosphate (containing 1% or more ortho-isomer)	Y	S/P	1	2G	Cont	No	T2	IIA	Yes	C	No	AB	No	15.12.3, 15.19, 16.2.6
Tricresyl phosphate (containing less than 1% ortho-isomer)	Y	S/P	2	2G	Open	No			Yes	O	No	A	No	15.19.6, 16.2.6
Tridecane	Y	P	2	2G	Open	No			Yes	O	No	AB	No	15.19.6
Tridecanoic acid	Y	P	2	2G	Open	No			Yes	O	No	A	No	15.19.6, 16.2.6, 16.2.9
Tridecyl acetate	Y	P	3	2G	Open	No	-	-	Yes	O	No	A	No	15.19.6
Triethanolamine	Z	S/P	3	2G	Open	No		IIA	Yes	O	No	A	No	16.2.9
Triethylamine	Y	S/P	2	2G	Cont	No	T2	IIA	No	R	F-T	AC	Yes	15.12, 15.19.6
Triethylbenzene	X	P	2	2G	Open	No			Yes	O	No	A	No	15.19.6
Triethylenetetramine	Y	S/P	2	2G	Open	No	T2	IIA	Yes	O	No	A	No	15.19.6
Triethyl phosphate	Z	P	3	2G	Open	No			Yes	O	No	A	No	
Triethyl phosphite	Z	S/P	3	2G	Cont	No			No	R	F-T	AB	No	15.12.1, 15.19.6, 16.2.9
Triisopropanolamine	Z	P	3	2G	Open	No			Yes	O	No	A	No	

a	c	d	e	f	g	h	i'	i''	i'''	j	k	l	n	o
Triisopropylated phenyl phosphates	X	P	2	2G	Open	No			Yes	O	No	A	No	15.19.6, 16.2.6
Trimethylacetic acid	Y	S/P	2	2G	Cont	No			Yes	R	No	A	No	15.11.2, 15.11.3, 15.11.4, 15.11.5, 15.11.6, 15.11.7, 15.11.8, 15.19.6, 16.2.6, 16.2.9
Trimethylamine solution (30% or less)	Z	S/P	2	2G	Cont	No			No	C	F-T	AC	Yes	15.12, 15.14, 15.19, 16.2.9
Trimethylbenzene (all isomers)	X	P	2	2G	Cont	No			No	R	F	A	No	15.19.6
Trimethylol propane propoxylated	Z	S/P	3	2G	Open	No	-	-	Yes	O	No	ABC	No	
2,2,4-Trimethyl-1,3-pentanediol diisobutyrate	Z	P	3	2G	Open	No			Yes	O	No	AB	No	
2,2,4-Trimethyl-1,3-pentanediol-1-isobutyrate	Y	P	2	2G	Open	No			Yes	O	No	A	No	15.19.6
1,3,5-Trioxane	Y	S/P	3	2G	Cont	No			No	R	F	AD	No	15.19.6, 16.2.9
Tripropylene glycol	Z	P	3	2G	Open	No			Yes	O	No	A	No	
Trixylyl phosphate	X	P	2	2G	Open	No			Yes	O	No	A	No	15.19.6, 16.2.6
Tung oil	Y	S/P	2 (k)	2G	Open	No	-	-	Yes	O	No	ABC	No	15.19.6, 16.2.6, 16.2.9
Turpentine	X	P	2	2G	Cont	No			No	R	F	A	No	15.19.6
Undecanoic acid	Y	P	2	2G	Open	No			Yes	O	No	A	No	16.2.6, 16.2.9
1-Undecene	X	P	2	2G	Open	No			Yes	O	No	A	No	15.19.6
Undecyl alcohol	X	P	2	2G	Open	No			Yes	O	No	A	No	15.19.6, 16.2.9
Urea/Ammonium nitrate solution	Z	P	3	2G	Open	No			Yes	O	No	A	No	
Urea/Ammonium nitrate solution (containing less than 1% free ammonia)	Z	S/P	3	2G	Cont	No			NF	R	T	A	No	16.2.9
Urea/Ammonium phosphate solution	Y	P	2	2G	Open	No			Yes	O	No	A	No	15.19.6
Urea solution	Z	P	3	2G	Open	No			Yes	O	No	A	No	
Valeraldehyde (all isomers)	Y	S/P	3	2G	Cont	Inert	T3	IIB	No	R	F-T	A	No	15.4.6, 15.19.6
Vegetable acid oils (m)	Y	S/P	2	2G	Open	No	-	-	Yes	O	No	ABC	No	15.19.6, 16.2.6, 16.2.9
Vegetable fatty acid distillates (m)	Y	S/P	2	2G	Open	No	-	-	Yes	O	No	ABC	No	15.19.6, 16.2.6, 16.2.9
Vinyl acetate	Y	S/P	3	2G	Cont	No	T2	IIA	No	R	F	A	No	15.13, 15.19.6, 16.6.1, 16.6.2
Vinyl ethyl ether	Z	S/P	2	1G	Cont	Inert	T3	IIB	No	C	F-T	A	E	15.4, 15.13, 15.14, 16.6.1, 16.6.2, 15.19.6
Vinylidene chloride	Y	S/P	2	2G	Cont	Inert	T2	IIA	No	R	F-T	B	Yes	15.13, 15.14, 15.19.6, 16.6.1, 16.6.2
Vinyl neodecanoate	Y	S/P	2	2G	Open	No			Yes	O	No	AB	No	15.13, 15.19.6, 16.6.1, 16.6.2
Vinyltoluene	Y	S/P	2	2G	Cont	No		IIA	No	R	F	AB	No	15.13, 15.19.6, 16.6.1, 16.6.2

a	c	d	e	f	g	h	i'	i''	i'''	j	k	l	n	o
Waxes	Y	P	2	2G	Open	No	-	-	Yes	O	No	AB	No	15.19.6, 16.2.6, 16.2.9
White spirit, low (15-20%) aromatic	Y	P	2	2G	Cont	No			No	R	F	A	No	15.19.6, 16.2.9
Xylenes	Y	P	2	2G	Cont	No			No	R	F	A	No	15.19.6, 16.2.9 (h)
Xylenes/ethylbenzene (10% or more) mixture	Y	P	2	2G	Cont	No	-	-	No	R	F	A	No	15.19.6
Xylenol	Y	S/P	2	2G	Open	No		IIA	Yes	O	No	AB	No	15.19.6, 16.2.9
Zinc alkaryl dithiophosphate (C7-C16)	Y	P	2	2G	Open	No			Yes	O	No	AB	No	15.19.6, 16.2.6, 16.2.9
Zinc alkenyl carboxamide	Y	P	2	2G	Open	No			Yes	O	No	AB	No	15.19.6, 16.2.6
Zinc alkyl dithiophosphate (C3-C14)	Y	P	2	2G	Open	No			Yes	O	No	AB	No	15.19.6, 16.2.6

a If the product to be carried contains flammable solvents such that the flashpoint does not exceed 60°C, then special electrical systems and a flammable-vapour detector shall be provided.

b Although water is suitable for extinguishing open-air fires involving chemicals to which this footnote applies, water shall not be allowed to contaminate closed tanks containing these chemicals because of the risk of hazardous gas generation.

c Phosphorus, yellow or white is carried above its autoignition temperature and therefore flashpoint is not appropriate. Electrical equipment requirements may be similar to those for substances with a flashpoint above 60°C.

d Requirements are based on those isomers having a flashpoint of 60°C, or less; some isomers have a flashpoint greater than 60°C, and therefore the requirements based on flammability would not apply to such isomers.

e Applies to n-decyl alcohol only.

f Dry chemical shall not be used as fire extinguishing media.

g Confined spaces shall be tested for both formic acid vapours and carbon monoxide gas, a decomposition product.

h Applies to p-xylene only.

i For mixtures containing no other components with safety hazards and where the pollution category is Y or less.

j Only certain alcohol-resistant foams are effective.

k Requirements for Ship Type identified in *column e* might be subject to regulation 4.1.3 of Annex II of MARPOL 73/78.

l Applicable when the melting point is equal to or greater than 0°C.

m From vegetable oils specified in the IBC Code.

CHAPTER 18

LIST OF PRODUCTS TO WHICH THE CODE DOES NOT APPLY

18.1 The following are products, which have been reviewed for their safety and pollution hazards and determined not to present hazards to such an extent as to warrant application of the Code.

18.2 Although the products listed in this chapter fall outside the scope of the Code, the attention of Administrations is drawn to the fact that some safety precautions may be needed for their safe transportation. Accordingly, Administrations shall prescribe appropriate safety requirements.

18.3 Some liquid substances are identified as falling into Pollution Category Z and, therefore, subject to certain requirements of Annex II of MARPOL 73/78.

18.4 Liquid mixtures which are assessed or provisionally assessed under regulation 6.3 of MARPOL Annex II as falling into Pollution Category Z or OS, and which do not present safety hazards, may be carried under the appropriate entry in this chapter for "Noxious or Non-Noxious Liquid Substances, not otherwise specified (n.o.s.)".

EXPLANATORY NOTES

Product name	The product name shall be used in the shipping document for any cargo offered for bulk shipments. Any additional name may be included in brackets after the product name. In some cases, the product names are not identical with the names given in previous issues of the Code.
Pollution Category	The letter Z means the Pollution Category assigned to each product under Annex II of MARPOL 73/78. OS means the product was evaluated and found to fall outside Categories X, Y, or Z.

Product name	Pollution Category
Acetone	Z
Alcoholic beverages, n.o.s.	Z
Apple juice	OS
n-Butyl alcohol	Z
sec-Butyl alcohol	Z
Calcium nitrate solutions (50% or less)	Z
Clay slurry	OS
Coal slurry	OS
Diethylene glycol	Z
Ethyl alcohol	Z
Ethylene carbonate	Z
Glucose solution	OS
Glycerine	Z
Hexamethylenetetramine solutions	Z
Hexylene glycol	Z
Hydrogenated starch hydrolysate	OS
Isopropyl alcohol	Z
Kaolin slurry	OS
Lecithin	OS
Magnesium hydroxide slurry	Z
Maltitol solution	OS
N-Methylglucamine solution (70% or less)	Z
Methyl propyl ketone	Z
Molasses	OS
Noxious liquid, (11) n.o.s. (trade name ...., contains ....) Cat. Z	Z
Non noxious liquid, (12) n.o.s. (trade name ...., contains ....) Cat. OS	OS
Polyaluminium chloride solution	Z
Polyglycerin, sodium salt solution (containing less than 3% sodium hydroxide)	Z
Potassium formate solutions	Z
Propylene carbonate	Z
Propylene glycol	Z
Sodium acetate solutions	Z
Sodium sulphate solutions	Z

Product name	Pollution Category
Sorbitol solution	OS
Sulphonated polyacrylate solution	Z
Tetraethyl silicate monomer/oligomer (20% in ethanol)	Z
Triethylene glycol	Z
Vegetable protein solution (hydrolysed)	OS
Water	OS

CHAPTER 19

INDEX OF PRODUCTS CARRIED IN BULK

19.1 The first column of the Index of Products Carried in Bulk (hereafter referred to as "the Index") provides the so called Index Name. Where the Index Name is in capital and in bold, the Index Name is identical to the Product Name in either chapter 17 or chapter 18. The second column listing the relevant Product Name is therefore empty. Where the Index Name is in non-bold lower case it reflects a synonym for which the Product Name in either chapter 17 or chapter 18 is given in the second column. The relevant chapter of the IBC Code is reflected in the third column. The fourth column gives the UN Numbers of products, which were available up to February 2001.*

19.2 The Index has been developed for information purposes only. None of the Index Names indicated in non-bold lower case in the first column shall be used as Product Name on the shipping document.

19.3 Prefixes forming an integral part of the name are shown in ordinary (roman) type and are taken into account in determining the alphabetical order of entries. These include such prefixes as:

Mono Di Tri Tetra Penta Iso Bis Neo Ortho Cyclo

19.4 Prefixes that are disregarded for purposes of alphabetical order are in italics and include the following:

n-	(normal-)
sec-	(secondary-)
tert-	(tertiary-)
o-	(ortho-)
m-	(meta-)
p-	(para-)
N-	
O-	
sym-	(symmetrical)
uns-	(unsymmetrical)
dl-	
cis-	
trans-	
(E)-	
(Z)-	
alpha-	(α-)
beta-	(β-)
gamma-	(γ-)
epsilon-	(ε-)

Index Name	Product Name	Chapter	UN No.
Abietic anhydride	**ROSIN**	17	
acedimethylamide	**N,N-DIMETHYLACETAMIDE**	17	
Acetaldehyde cyanohydrin	**LACTONITRILE SOLUTION (80% OR LESS)**	17	
Acetaldehyde trimer	**PARALDEHYDE**	17	
ACETIC ACID		17	
Acetic acid anhydride	**ACETIC ANHYDRIDE**	17	
Acetic acid, ethenyl ester	**VINYL ACETATE**	17	
Acetic acid, methyl ester	**METHYL ACETATE**	17	
Acetic acid, vinyl ester	**VINYL ACETATE**	17	
ACETIC ANHYDRIDE		17	1715
Acetic ester	**ETHYL ACETATE**	17	
Acetic ether	**ETHYL ACETATE**	17	
Acetic oxide	**ACETIC ANHYDRIDE**	17	
Acetoacetic acid, methyl ester	**METHYL ACETOACETATE**	17	
Acetoacetic ester	**ETHYL ACETOACETATE**	17	
ACETOCHLOR		17	
ACETONE		18	
ACETONE CYANOHYDRIN		17	1541
ACETONITRILE		17	1648
ACETONITRILE (LOW PURITY GRADE)		17	
Acetyl anhydride	**ACETIC ANHYDRIDE**	17	
Acetylene tetrachloride	**TETRACHLOROETHANE**	17	
Acetyl ether	**ACETIC ANHYDRIDE**	17	
Acetyl oxide	**ACETIC ANHYDRIDE**	17	
ACID OIL MIXTURE FROM SOYABEAN, CORN (MAIZE) AND SUNFLOWER OIL REFINING		17	
Acintene	**BETA-PINENE**	17	
Acroleic acid	**ACRYLIC ACID**	17	
ACRYLAMIDE SOLUTION (50% OR LESS)		17	2074
ACRYLIC ACID		17	2218
Acrylic acid, 2-hydroxyethyl ester	**2-HYDROXYETHYL ACRYLATE**	17	
Acrylic amide solution, 50% or less	**ACRYLAMIDE SOLUTION (50% OR LESS)**	17	
Acrylic resin monomer	**METHYL METHACRYLATE**	17	
ACRYLONITRILE		17	1093
ACRYLONITRILE-STYRENE COPOLYMER DISPERSION IN POLYETHER POLYOL		17	
Adipic acid, bis(2-ethylhexyl) ester	**DI-(2-ETHYLHEXYL) ADIPATE**	17	
ADIPONITRILE		17	2205
ALACHLOR TECHNICAL (90% OR MORE)		17	
Alcohol	**ETHYL ALCOHOL**	18	
Alcohol, C10	**DECYL ALCOHOL (ALL ISOMERS)**	17	
Alcohol, C11	**UNDECYL ALCOHOL**	17	
Alcohol, C12	**DODECYL ALCOHOL**	17	
Alcohol, C7	**HEPTANOL (ALL ISOMERS) (D)**	17	
Alcohol, C8	**OCTANOL (ALL ISOMERS)**	17	
Alcohol, C9	**NONYL ALCOHOL (ALL ISOMERS)**	17	
ALCOHOLIC BEVERAGES, N.O.S.		18	
ALCOHOL (C9-C11) POLY (2.5-9) ETHOXYLATE		17	
ALCOHOL (C6-C17) (SECONDARY) POLY(3-6)ETHOXYLATES		17	
ALCOHOL (C6-C17) (SECONDARY) POLY(7-12)ETHOXYLATES		17	

Index Name	Product Name	Chapter	UN No.
ALCOHOL (C12-C16) POLY(1-6)ETHOXYLATES		17	
ALCOHOL (C12-C16) POLY(20+)ETHOXYLATES		17	
ALCOHOL (C12-C16) POLY(7-19)ETHOXYLATES		17	
ALCOHOLS (C13+)		17	
Alcohols, C13 - C15	**ALCOHOLS (C13+)**	17	
ALCOHOLS (C8-C11), PRIMARY, LINEAR AND ESSENTIALLY LINEAR		17	
ALCOHOLS (C12-C13), PRIMARY, LINEAR AND ESSENTIALLY LINEAR		17	
ALCOHOLS (C14-C18), PRIMARY, LINEAR AND ESSENTIALLY LINEAR		17	
Aldehyde collidine	**2-METHYL-5-ETHYL PYRIDINE**	17	
Aldehydine	**2-METHYL-5-ETHYL PYRIDINE**	17	
ALKANES (C6-C9)		17	
ISO- AND CYCLO-ALKANES (C10-C11)		17	
ISO- AND CYCLO-ALKANES (C12+)		17	
N-ALKANES (C10+)		17	
Alkane(C10-C18)sulfonic acid, phenyl ester	**ALKYL SULPHONIC ACID ESTER OF PHENOL**	17	
ALKARYL POLYETHERS (C9-C20)		17	
ALKENYL (C11+) AMIDE		17	
ALKENYL (C16-C20) SUCCINIC ANHYDRIDE		17	
ALKYL ACRYLATE-VINYLPYRIDINE COPOLYMER IN TOLUENE		17	
ALKYLARYL PHOSPHATE MIXTURES (MORE THAN 40% DIPHENYL TOLYL PHOSPHATE, LESS THAN 0.02% ORTHO-ISOMERS)		17	
ALKYLATED (C4-C9) HINDERED PHENOLS		17	
ALKYLBENZENE, ALKYLINDANE, ALKYLINDENE MIXTURE (EACH C12-C17)		17	
ALKYL BENZENE DISTILLATION BOTTOMS		17	
ALKYLBENZENE MIXTURES (CONTAINING AT LEAST 50% OF TOLUENE)		17	
ALKYL (C3-C4) BENZENES		17	
ALKYL (C5-C8) BENZENES		17	
ALKYL(C9+)BENZENES		17	
ALKYL (C11-C17) BENZENE SULPHONIC ACID		17	2584, 258
ALKYLBENZENE SULPHONIC ACID, SODIUM SALT SOLUTION		17	
ALKYL (C12+) DIMETHYLAMINE		17	2735
ALKYL DITHIOCARBAMATE (C19-C35)		17	
ALKYLDITHIOTHIADIAZOLE (C6-C24)		17	
ALKYL ESTER COPOLYMER (C4-C20)		17	
ALKYL (C8-C10)/(C12-C14):(40% OR LESS/60% OR MORE) POLYGLUCOSIDE SOLUTION (55% OR LESS)		17	
ALKYL (C8-C10)/(C12-C14):(60% OR MORE/40% OR LESS) POLYGLUCOSIDE SOLUTION(55% OR LESS)		17	
ALKYL (C7-C9) NITRATES		17	
2,2'- [3-(Alkyl(C16-C18)oxy)propylimino]diethanol	**ETHOXYLATED LONG CHAIN (C16+)**	17	

Index Name	Product Name	Chapter	UN No.
ALKYL(C7-C11)PHENOL POLY(4-12) ETHOXYLATE		17	
ALKYL (C8-C40) PHENOL SULPHIDE		17	
ALKYL (C8-C9) PHENYLAMINE IN AROMATIC SOLVENTS		17	1993
ALKYL (C9-C15) PHENYL PROPOXYLATE		17	
ALKYL (C8-C10)/(C12-C14):(50%/50%) POLYGLUCOSIDE SOLUTION (55% OR LESS)		17	
ALKYL (C12-C14) POLYGLUCOSIDE SOLUTION (55% OR LESS)		17	
ALKYL (C8-C10) POLYGLUCOSIDE SOLUTION (65% OR LESS).		17	
ALKYL(C10-C20, SATURATED AND UNSATURATED) PHOSPHITE		17	
ALKYL SULPHONIC ACID ESTER OF PHENOL		17	
3-Alky(C16-C18)oxy-N,N'-bis(2-hydroxyethyl)propan-1-amine	**ETHOXYLATED LONG CHAIN (C16+)**	17	
ALLYL ALCOHOL		17	1098
ALLYL CHLORIDE		17	1100
Aluminium silicate hydroxide	**KAOLIN SLURRY**	18	
ALUMINIUM SULPHATE SOLUTION		17	
Aminoacetic acid, sodium salt solution	**GLYCINE, SODIUM SALT SOLUTION**	17	
1-Amino-3-aminomethyl-3,5,5-trimethylcyclohexane	**ISOPHORONEDIAMINE**	17	
Aminobenzene	**ANILINE**	17	
1-Aminobutane	**BUTYLAMINE (ALL ISOMERS)**	17	
2-Aminobutane	**BUTYLAMINE (ALL ISOMERS)**	17	
Aminocyclohexane	**CYCLOHEXYLAMINE**	17	
Aminoethane	**ETHYLAMINE**	17	
Aminoethane solutions, 72% or less	**ETHYLAMINE SOLUTIONS (72% OR LESS)**	17	
2-Aminoethanol	**ETHANOLAMINE**	17	
2-(2-AMINOETHOXY) ETHANOL		17	3055
2-(2-Aminoethylamino)ethanol	**AMINOETHYL ETHANOLAMINE**	17	
AMINOETHYLDIETHANOLAMINE/AMINO ETHYLETHANOLAMINE SOLUTION		17	
AMINOETHYL ETHANOLAMINE		17	
N-(2-aminoethyl)ethylenediamine	**DIETHYLENETRIAMINE**	17	
1-(2-Aminoethyl)piperazine	**N-AMINOETHYLPIPERAZINE**	17	
N-AMINOETHYLPIPERAZINE		17	2815
2-Aminoisobutane	**BUTYLAMINE (ALL ISOMERS)**	17	
Aminomethane	**METHYLAMINE SOLUTIONS (42% OR LESS)**	17	
Aminomethane solutions, 42% or less	**METHYLAMINE SOLUTIONS (42% OR LESS)**	17	
1-Amino-2-methylbenzene	**O-TOLUIDINE**	17	
2-Amino-1-methylbenzene	**O-TOLUIDINE**	17	
2-AMINO-2-METHYL-1-PROPANOL		17	
3-Aminomethyl-3,5,5-trimethylcyclohexylamine	**ISOPHORONEDIAMINE**	17	
Aminophen	**ANILINE**	17	
1-Aminopropane	**N-PROPYLAMINE**	17	
2-Aminopropane	**ISOPROPYLAMINE**	17	
2-Aminopropane (70% or less) solution	**ISOPROPYLAMINE (70% OR LESS) SOLUTION**	17	
1-Amino-2-propanol	**ISOPROPANOLAMINE**	17	
1-Aminopropan-2-ol	**ISOPROPANOLAMINE**	17	
3-Aminopropan-1-ol	**N-PROPANOLAMINE**	17	
2-Aminotoluene	**O-TOLUIDINE**	17	

Index Name	Product Name	Chapter	UN No.
o-Aminotoluene	**O-TOLUIDINE**	17	
5-Amino-1,3,3-trimethylcyclohexylmethylamine	**ISOPHORONEDIAMINE**	17	
AMMONIA AQUEOUS (28% OR LESS)		17	2672
Ammonia water, 28% or less	**AMMONIA AQUEOUS (28% OR LESS)**	17	
AMMONIUM HYDROGEN PHOSPHATE SOLUTION		17	
Ammonium hydroxide, 28% or less	**AMMONIA AQUEOUS (28% OR LESS)**	17	
AMMONIUM LIGNOSULPHONATE SOLUTIONS		17	
AMMONIUM NITRATE SOLUTION (93% OR LESS)		17	
AMMONIUM POLYPHOSPHATE SOLUTION		17	
AMMONIUM SULPHATE SOLUTION		17	
AMMONIUM SULPHIDE SOLUTION (45% OR LESS)		17	2683
AMMONIUM THIOSULPHATE SOLUTION (60% OR LESS)		17	
AMYL ACETATE (ALL ISOMERS)		17	1104
Amyl acetate, commercial	**AMYL ACETATE (ALL ISOMERS)**	17	
n-Amyl acetate	**AMYL ACETATE (ALL ISOMERS)**	17	
sec-Amyl acetate	**AMYL ACETATE (ALL ISOMERS)**	17	
Amylacetic ester	**AMYL ACETATE (ALL ISOMERS)**	17	
Amyl alcohol	**N-AMYL ALCOHOL**	17	
N-AMYL ALCOHOL		17	
AMYL ALCOHOL, PRIMARY		17	
SEC-AMYL ALCOHOL		17	
TERT-AMYL ALCOHOL		17	
Amyl aldehyde	**VALERALDEHYDE (ALL ISOMERS)**	17	
Amyl carbinol	**HEXANOL**	17	
alpha-n-Amylene	**PENTENE (ALL ISOMERS)**	17	
Amylene hydrate	**TERT-AMYL ALCOHOL**	17	
tert-Amylenes	**PENTENE (ALL ISOMERS)**	17	
Amyl ethyl ketone	**ETHYL AMYL KETONE**	17	
Amyl hydrate	**N-AMYL ALCOHOL**	17	
Amyl hydride	**PENTANE (ALL ISOMERS)**	17	
TERT-AMYL METHYL ETHER		17	1993
n-Amyl methyl ketone	**METHYL AMYL KETONE**	17	
n-Amyl propionate	**N-PENTYL PROPIONATE**	17	
Anaesthetic ether	**DIETHYL ETHER**	17	
ANILINE		17	1547
Aniline oil	**ANILINE**	17	
Anilinobenzene	**DIPHENYLAMINE (MOLTEN)**	17	
Anthracene oil (coal tar fraction)	**COAL TAR**	17	
Ant oil, artificial	**FURFURAL**	17	
APPLE JUICE		18	
Aqua fortis	**NITRIC ACID (70% AND OVER)**	17	
Argilla	**KAOLIN SLURRY**	18	
ARYL POLYOLEFINS (C11-C50)		17	
AVIATION ALKYLATES (C8 PARAFFINS AND ISO-PARAFFINS BPT 95 - 120°C)		17	
Azacycloheptane	**HEXAMETHYLENEIMINE**	17	
3-Azapentane-1,5-diamine	**DIETHYLENETRIAMINE**	17	
Azepane	**HEXAMETHYLENEIMINE**	17	
Azotic acid	**NITRIC ACID (70% AND OVER)**	17	

Index Name	Product Name	Chapter	UN No.
Banana oil	**AMYL ACETATE (ALL ISOMERS)**	17	
BARIUM LONG CHAIN (C11-C50) ALKARYL SULPHONATE		17	2810
Basic calcium alkyl saliciylate in approximately 30% mineral oil	**CALCIUM LONG-CHAIN ALKYL SALICYLATE (C13+)**	17	
Battery acid	**SULPHURIC ACID**	17	
Behenyl alcohol	**ALCOHOLS (C13+)**	17	
Benzenamine	**2-METHYL-5-ETHYL PYRIDINE**	17	
1,2-Benzenedicarboxylic acid, diethyl ester	**DIETHYL PHTHALATE**	17	
1,2-Benzenedicarboxylic acid, diundecyl ester	**DIUNDECYL PHTHALATE**	17	
BENZENE AND MIXTURES HAVING 10% BENZENE OR MORE (I)		17	1114
BENZENE SULPHONYL CHLORIDE		17	2225
BENZENETRICARBOXYLIC ACID, TRIOCTYL ESTER		17	
Benzenol	**PHENOL**	17	
Benzol	**BENZENE AND MIXTURES HAVING 10% BENZENE OR MORE**	17	
Benzole	**BENZENE AND MIXTURES HAVING 10% BENZENE OR MORE**	17	
Benzophenol	**PHENOL**	17	
Benzothiazole-2-thiol(, sodium salt)	**MERCAPTOBENZOTHIAZOL, SODIUM SALT SOLUTION**	17	
2-Benzothiazolethiol(, sodium salt)	**MERCAPTOBENZOTHIAZOL, SODIUM SALT SOLUTION**	17	
(2-Benzothiazolylthio) sodium solution	**MERCAPTOBENZOTHIAZOL, SODIUM SALT SOLUTION**	17	
BENZYL ACETATE		17	
BENZYL ALCOHOL		17	
Benzyl butyl phthalate	**BUTYL BENZYL PHTHALATE**	17	
BENZYL CHLORIDE		17	1738
Betaprone	**BETA-PROPIOLACTONE**	17	
Betula oil	**METHYL SALICYLATE**	17	
Biformyl	**GLYOXAL SOLUTION (40% OR LESS)**	17	
Bihexyl	**DODECANE (ALL ISOMERS)**	17	
Biphenyl	**DIPHENYL**	17	
Bis(methylcyclopentadiene)	**METHYLCYCLOPENTADIENE DIMER**	17	
2,5-Bis(alkyl(C7+)thio)-1,3,4-thiadiazole	**ALKYLDITHIOTHIADIAZOLE (C6-C24)**	17	
Bis(2-aminoethyl)amine	**DIETHYLENETRIAMINE**	17	
N,N'-Bis(2-aminoethyl)ethane-1,2-diamine	**TRIETHYLENETETRAMINE**	17	
N,N'-Bis(2-aminoethyl)ethylenediamine	**TRIETHYLENETETRAMINE**	17	
N,N-Bis(2-(bis(carboxymethyl)amino)ethyl)glycine, pentasodium salt	**DIETHYLENETRIAMINEPENTAACETIC ACID, PENTASODIUM**	17	
Bis(2-butoxyethyl) ether	**DIETHYLENE GLYCOL DIBUTYL ETHER**	17	
N,N- Bis(carboxymethyl)glycine trisodium salt	**NITRILOTRIACETIC ACID, TRISODIUM SALT SOLUTION**	17	
Bis(chloroethyl) ether	**DICHLOROETHYL ETHER**	17	
Bis(2-chloroethyl) ether	**DICHLOROETHYL ETHER**	17	
Bis (2-chloroisopropyl) ether	**2,2'-DICHLOROISOPROPYL ETHER**	17	
Bis(2-chloro-1-methylethyl) ether	**2,2'-DICHLOROISOPROPYL ETHER**	17	
1,1-Bis[4-(2,3-epoxypropoxy)phenyl]ethane	**DIGLYCIDYL ETHER OF BISPHENOL A**	17	
Bis[2-(2,3-epoxypropoxy)phenyl]methane	**DIGLYCIDYL ETHER OF BISPHENOL F**	17	
Bis(2-ethoxyethyl) ether	**DIETHYLENE GLYCOL DIETHYL ETHER**	17	
Bis(2-ethylhexyl) adipate	**DI-(2-ETHYLHEXYL) ADIPATE**	17	
Bis(2-ethylhexyl) hydrogen phosphate	**DI-(2-ETHYLHEXYL) PHOSPHORIC ACID**	17	
Bis(2-ethylhexyl) phthalate	**DIOCTYL PHTHALATE**	17	
Bis(2-hydroxyethyl)amine	**DIETHANOLAMINE**	17	
Bis(2-hydroxyethyl)ammonium 2,4-dichlorophenoxyacetate	**2,4-DICHLOROPHENOXYACETIC ACID, DIETHANOLAMINE**	17	
Bis(2-hydroxyethyl) ether	**DIETHYLENE GLYCOL**	18	

Index Name	Product Name	Chapter	UN No.
Bis(2-hydroxypropyl)amine	**DIISOPROPANOLAMINE**	17	
Bis(6-methylheptyl) phthalate	**DIOCTYL PHTHALATE**	17	
Blackstrap molasses	**MOLASSES**	18	
Bolus alba	**KAOLIN SLURRY**	18	
BRAKE FLUID BASE MIX: POLY(2-8)ALKYLENE (C2-C3) GLYCOLS/POLYALKYLENE (C2-C10) GLYCOLS MONOALKYL (C1-C4) ETHERS AND THEIR BORATE ESTERS		17	
Bran oil	**FURFURAL**	17	
Brimstone	**SULPHUR (MOLTEN)**	17	
BROMOCHLOROMETHANE		17	
Butaldehyde	**BUTYRALDEHYDE (ALL ISOMERS)**	17	
Butanal	**BUTYRALDEHYDE (ALL ISOMERS)**	17	
n-Butanal	**BUTYRALDEHYDE (ALL ISOMERS)**	17	
Butane-1,3-diol	**BUTYLENE GLYCOL**	17	
1,3-Butanediol	**BUTYLENE GLYCOL**	17	
Butane -1,4-diol	**BUTYLENE GLYCOL**	17	
1,4-Butanediol	**BUTYLENE GLYCOL**	17	
Butane-2,3-diol	**BUTYLENE GLYCOL**	17	
2,3-Butanediol	**BUTYLENE GLYCOL**	17	
Butanoic acid	**BUTYRIC ACID**	17	
Butanol	**N-BUTYL ALCOHOL**	18	
Butanol-1	**N-BUTYL ALCOHOL**	18	
Butan-1-ol	**N-BUTYL ALCOHOL**	18	
1-Butanol	**N-BUTYL ALCOHOL**	18	
Butan-2-ol	**SEC-BUTYL ALCOHOL**	18	
2-Butanol	**SEC-BUTYL ALCOHOL**	18	
Butanol acetate	**BUTYL ACETATE (ALL ISOMERS)**	17	
2-Butanol acetate	**BUTYL ACETATE (ALL ISOMERS)**	17	
1,4-Butanolide	**GAMMA-BUTYROLACTONE**	17	
Butan-4-olide	**GAMMA-BUTYROLACTONE**	17	
n-Butanol	**N-BUTYL ALCOHOL**	18	
sec-Butanol	**SEC-BUTYL ALCOHOL**	18	
tert-Butanol	**TERT-BUTYL ALCOHOL**	17	
Butan-2-one	**METHYL ETHYL KETONE**	17	
2-Butanone	**METHYL ETHYL KETONE**	17	
2-Butenal	**CROTONALDEHYDE**	17	
Butene dimer	**OCTENE (ALL ISOMERS)**	17	
BUTENE OLIGOMER		17	
1-Butoxybutane	**N-BUTYL ETHER**	17	
2-Butoxyethanol	**ETHYLENE GLYCOL MONOALKYL ETHERS**	17	
2-tert-butoxyethanol	**ETHYLENE GLYCOL MONOALKYL ETHERS**	17	
2-(2-Butoxyethoxy)ethanol	**POLY(2-8)ALKYLENE GLYCOL MONOALKYL(C1-C6) ETHER**	17	
2-(2-Butoxyethoxy)ethyl acetate	**POLY(2-8)ALKYLENE GLYCOL MONOALKYL (C1-C6) ETHER**	17	
2-Butoxyethyl acetate	**ETHYLENE GLYCOL BUTYL ETHER ACETATE**	17	
1-Butoxypropan-2-ol	**PROPYLENE GLYCOL MONOALKYL ETHER**	17	
Butyl acetate	**BUTYL ACETATE (ALL ISOMERS)**	17	
BUTYL ACETATE (ALL ISOMERS)		17	1123
n-Butyl acetate	**BUTYL ACETATE (ALL ISOMERS)**	17	
sec-Butyl acetate	**BUTYL ACETATE (ALL ISOMERS)**	17	
tert-Butyl acetate	**BUTYL ACETATE (ALL ISOMERS)**	17	
BUTYL ACRYLATE (ALL ISOMERS)		17	2348
n-Butyl acrylate	**BUTYL ACRYLATE (ALL ISOMERS)**	17	

Index Name	Product Name	Chapter	UN No.
Butyl alcohol	**N-BUTYL ALCOHOL**	18	
N-BUTYL ALCOHOL		18	
SEC-BUTYL ALCOHOL		18	
TERT-BUTYL ALCOHOL		17	
n-Butyl aldehyde	**BUTYRALDEHYDE (ALL ISOMERS)**	17	
BUTYLAMINE (ALL ISOMERS)		17	1125, 121
n-Butylamine	**BUTYLAMINE (ALL ISOMERS)**	17	
sec-Butylamine	**BUTYLAMINE (ALL ISOMERS)**	17	
tert-Butylamine	**BUTYLAMINE (ALL ISOMERS)**	17	
BUTYLBENZENE (ALL ISOMERS)		17	2709
tert-Butylbenzene	**BUTYLBENZENE (ALL ISOMERS)**	17	
BUTYL BENZYL PHTHALATE		17	
Butyl butanoate	**BUTYL BUTYRATE (ALL ISOMERS)**	17	
BUTYL BUTYRATE (ALL ISOMERS)		17	
n-Butyl butyrate	**BUTYL BUTYRATE (ALL ISOMERS)**	17	
n-Butylcarbinol	**N-AMYL ALCOHOL**	17	
Butyl carbitol	**POLY(2-8)ALKYLENE GLYCOL MONOALKYL(C1-C6) ETHER**	17	
Butyl carbitol acetate	**POLY(2-8)ALKYLENE GLYCOL MONOALKYL (C1-C6) ETHER**	17	
Butyl cellosolve	**ETHYLENE GLYCOL MONOALKYL ETHERS**	17	
Butyl cellosolve acetate	**ETHYLENE GLYCOL BUTYL ETHER ACETATE**	17	
BUTYL/DECYL/CETYL/EICOSYL METHACRYLATE MIXTURE		17	
Butyl/decyl/hexadecyl/icosyl methacrylate mixture	**BUTYL/DECYL/CETYL/EICOSYL METHACRYLATE MIXTURE**	17	
Butyl diglycol acetate	**POLY(2-8)ALKYLENE GLYCOL MONOALKYL (C1-C6) ETHER**	17	
BUTYLENE GLYCOL		17	
alpha-Butylene glycol	**BUTYLENE GLYCOL**	17	
beta-Butylene glycol	**BUTYLENE GLYCOL**	17	
Butylene glycol momomethyl ether	**3-METHOXY-1-BUTANOL**	17	
Butylene glycol monomethyl ether acetate	**3-METHOXYBUTYL ACETATE**	17	
Butylene oxide	**TETRAHYDROFURAN**	17	
1,2-BUTYLENE OXIDE		17	3022
Butyl ester	**BUTYL ACETATE (ALL ISOMERS)**	17	
Butyl ethanoate	**BUTYL ACETATE (ALL ISOMERS)**	17	
Butyl ether	**N-BUTYL ETHER**	17	
N-BUTYL ETHER		17	1149
Butylethylacetic acid	**OCTANOIC ACID (ALL ISOMERS)**	17	
Butylethylene	**HEXENE (ALL ISOMERS)**	17	
tert-Butyl ethyl ether	**ETHYL TERT-BUTYL ETHER**	17	
Butylic ether	**BUTYL ACETATE (ALL ISOMERS)**	17	
iso-Butyl ketone	**DIISOBUTYL KETONE**	17	
BUTYL METHACRYLATE		17	
tert-Butyl methyl ether	**METHYL TERT-BUTYL ETHER**	17	
Butyl methyl ketone	**METHYL BUTYL KETONE**	17	
Butyl phthalate	**DIBUTYL PHTHALATE**	17	
N-BUTYL PROPIONATE		17	1914
BUTYRALDEHYDE (ALL ISOMERS)		17	1129
n-Butyraldehyde	**BUTYRALDEHYDE (ALL ISOMERS)**	17	
BUTYRIC ACID		17	2820
n-Butyric acid	**BUTYRIC ACID**	17	
Butyric alcohol	**N-BUTYL ALCOHOL**	18	
Butyric aldehyde	**BUTYRALDEHYDE (ALL ISOMERS)**	17	
GAMMA-BUTYROLACTONE		17	
Cajeputene	**DIPENTENE**	17	

Index Name	Product Name	Chapter	UN No.
Calcium alkyl(longchain) salicylate (overbased) in mineral oil (LOA)	**CALCIUM LONG-CHAIN ALKYL SALICYLATE (C13+)**	17	
Calcium alkyl salicylate	**CALCIUM LONG-CHAIN ALKYL SALICYLATE (C13+)**	17	
Calcium bis(O-alkylsalicylate)	**CALCIUM LONG-CHAIN ALKYL SALICYLATE (C13+)**	17	
Calcium bromide / zinc bromide solution	**DRILLING BRINES (CONTAINING ZINC SALTS)**	17	
CALCIUM CARBONATE SLURRY		17	
CALCIUM HYDROXIDE SLURRY		17	
CALCIUM HYPOCHLORITE SOLUTION (15% OR LESS)		17	
CALCIUM HYPOCHLORITE SOLUTION (MORE THAN 15%)		17	
CALCIUM LIGNOSULPHONATE SOLUTIONS		17	
CALCIUM LONG-CHAIN ALKARYL SULPHONATE (C11-C50)		17	
CALCIUM LONG-CHAIN ALKYL(C5-C10) PHENATE		17	
CALCIUM LONG-CHAIN ALKYL(C11-C40) PHENATE		17	
CALCIUM LONG-CHAIN ALKYL PHENATE SULPHIDE (C8-C40)		17	
CALCIUM LONG-CHAIN ALKYL SALICYLATE (C13+)		17	
CALCIUM NITRATE/MAGNESIUM NITRATE/POTASSIUM CHLORIDE SOLUTION		17	
CALCIUM NITRATE SOLUTIONS (50% OR LESS)		18	1454
Cane molasses	**MOLASSES**	18	
Capric acid	**DECANOIC ACID**	17	
Caproic acid	**HEXANOIC ACID**	17	
alpha-Caproic acid	**OCTANOIC ACID (ALL ISOMERS)**	17	
Caprolactam	**EPSILON-CAPROLACTAM (MOLTEN OR AQUEOUS**	17	
EPSILON-CAPROLACTAM (MOLTEN OR AQUEOUS SOLUTIONS)		17	
Caproyl alcohol	**HEXANOL**	17	
Capryl alcohol	**OCTANOL (ALL ISOMERS)**	17	
Caprylic acid	**OCTANOIC ACID (ALL ISOMERS)**	17	
Caprylyl acetate	**N-OCTYL ACETATE**	17	
Carbamide	**UREA SOLUTION**	17	
Carbinol	**METHYL ALCOHOL**	17	
Carbitol acetate	**POLY(2-8)ALKYLENE GLYCOL MONOALKYL (C1-C6) ETHER**	17	
Carbitol solvent	**POLY(2-8)ALKYLENE GLYCOL MONOALKYL(C1-C6) ETHER**	17	
Carbolic acid	**PHENOL**	17	
CARBOLIC OIL		17	
Carbon bisulphide	**CARBON DISULPHIDE**	17	
CARBON DISULPHIDE		17	1131
CARBON TETRACHLORIDE		17	1846
Carbonyldiamide	**UREA SOLUTION**	17	
Carbonyldiamine	**UREA SOLUTION**	17	
1,3-Carbonyl dioxypropane	**PROPYLENE CARBONATE**	18	
Carboxyethyliminobis(ethylenenitrilo)tetraacetic acid, pentasodium salt	**DIETHYLENETRIAMINEPENTAACETIC ACID, PENTASODIUM**	17	
CASHEW NUT SHELL OIL (UNTREATED)		17	
CASTOR OIL		17	
Caustic potash solution	**POTASSIUM HYDROXIDE SOLUTION**	17	
Caustic soda	**SODIUM HYDROXIDE SOLUTION**	17	

Index Name	Product Name	Chapter	UN No.
Caustic soda solution	**SODIUM HYDROXIDE SOLUTION**	17	
Cellosolve acetate	**2-ETHOXYETHYL ACETATE**	17	
Cellosolve solvent	**ETHYLENE GLYCOL MONOALKYL ETHERS**	17	
CETYL/EICOSYL METHACRYLATE MIXTURE		17	
Cetyl / stearyl alcohol	**ALCOHOLS (C13+)**	17	
China clay	**KAOLIN SLURRY**	18	
CHLORINATED PARAFFINS (C10-C13)		17	
CHLORINATED PARAFFINS (C14-C17) (WITH 50% CHLORINE OR MORE, AND LESS THAN 1% C13 OR SHORTER CHAINS)		17	
CHLOROACETIC ACID (80% OR LESS)		17	1750
alpha-Chloroallyl chloride	**1,3-DICHLOROPROPENE**	17	
Chloroallylene	**ALLYL CHLORIDE**	17	
CHLOROBENZENE		17	1134
Chlorobenzol	**CHLOROBENZENE**	17	
Chlorobromomethane	**BROMOCHLOROMETHANE**	17	
1-Chloro-2-(beta-chloroethoxy)ethane	**DICHLOROETHYL ETHER**	17	
1-Chloro-2,3-epoxypropane	**EPICHLOROHYDRIN**	17	
Chloroethanol-2	**ETHYLENE CHLOROHYDRIN**	17	
2-Chloroethanol	**ETHYLENE CHLOROHYDRIN**	17	
2-Chloro-N-ethoxymethyl-6'-ethylacet-o-toluidide	**ACETOCHLOR**	17	
2-Chloro-N-(ethoxymethyl)-N-(2-ethyl-6-methylphenyl)acetamide	**ACETOCHLOR**	17	
2-Chloroethyl alcohol	**ETHYLENE CHLOROHYDRIN**	17	
beta-Chloroethyl alcohol	**ETHYLENE CHLOROHYDRIN**	17	
Chloroethyl ether	**DICHLOROETHYL ETHER**	17	
2-Chloro-6'-ethyl-N-(2-methoxy-1-methylethyl)acet-o-toluidide	**N-(2-METHOXY-1-METHYL ETHYL)-2-ETHYL-6-METHYL**	17	
2-Chloro-N-(2-ethyl-6-methylphenyl)-N-(2-methoxy-1-methylethyl)acetamide	**N-(2-METHOXY-1-METHYL ETHYL)-2-ETHYL-6-METHYL**	17	
CHLOROFORM		17	1888
CHLOROHYDRINS (CRUDE)		17	
m-Chloromethylbenzene	**M-CHLOROTOLUENE**	17	
o-Chloromethylbenzene	**O-CHLOROTOLUENE**	17	
p-Chloromethylbenzene	**P-CHLOROTOLUENE**	17	
Chloromethylethylene oxide	**EPICHLOROHYDRIN**	17	
(2-Chloro-l-methylethyl) ether	**2,2'-DICHLOROISOPROPYL ETHER**	17	
2-Chloro-1-methylethyl ether	**2,2'-DICHLOROISOPROPYL ETHER**	17	
Chloromethyloxirane	**EPICHLOROHYDRIN**	17	
4-CHLORO-2-METHYLPHENOXYACETIC ACID, DIMETHYLAMINE SALT SOLUTION		17	
1-Chloro-2-nitrobenzene	**O-CHLORONITROBENZENE**	17	
O-CHLORONITROBENZENE		17	1578
1-(4-CHLOROPHENYL)-4,4- DIMETHYL-PENTAN-3-ONE		17	
2- or 3- Chloropropanoic acid	**2- OR 3-CHLOROPROPIONIC ACID**	17	
3-Chloropropene	**ALLYL CHLORIDE**	17	
2- OR 3-CHLOROPROPIONIC ACID		17	2511
alpha- or beta- Chloropropionic acid	**2- OR 3-CHLOROPROPIONIC ACID**	17	
3-Chloropropylene	**ALLYL CHLORIDE**	17	
alpha-Chloropropylene	**ALLYL CHLORIDE**	17	
Chloropropylene oxide	**EPICHLOROHYDRIN**	17	
CHLOROSULPHONIC ACID		17	1754
Chlorosulphuric acid	**CHLOROSULPHONIC ACID**	17	

Index Name	Product Name	Chapter	UN No.
3-Chlorotoluene	**M-CHLOROTOLUENE**	17	
4-Chlorotoluene	**P-CHLOROTOLUENE**	17	
alpha-Chlorotoluene	**BENZYL CHLORIDE**	17	
M-CHLOROTOLUENE		17	2238
O-CHLOROTOLUENE		17	2238
P-CHLOROTOLUENE		17	2238
CHLOROTOLUENES (MIXED ISOMERS)		17	2238
CHOLINE CHLORIDE SOLUTIONS		17	
Cinene	**DIPENTENE**	17	
Cinnamene	**STYRENE MONOMER**	17	
Cinnamol	**STYRENE MONOMER**	17	
cis-Butenedioic anhydride	**MALEIC ANHYDRIDE**	17	
cis-9-Octadecenoic acid	**OLEIC ACID**	17	
cis-1,3-Pentadiene	**1,3-PENTADIENE**	17	
cis-trans-1,3-Pentadiene	**1,3-PENTADIENE**	17	
CITRIC ACID (70% OR LESS)		17	
CLAY SLURRY		18	
Cleaning solvents	**WHITE SPIRIT, LOW (15-20%) AROMATIC**	17	
COAL SLURRY		18	
COAL TAR		17	
Coal tar distillate	**COAL TAR NAPHTHA SOLVENT**	17	
COAL TAR NAPHTHA SOLVENT		17	
COAL TAR PITCH (MOLTEN)		17	
COCOA BUTTER		17	
COCONUT OIL		17	
COCONUT OIL FATTY ACID		17	
COCONUT OIL FATTY ACID METHYL ESTER		17	
Colamine	**ETHANOLAMINE**	17	
Cologne spirits	**ETHYL ALCOHOL**	18	
Colonial spirit	**METHYL ALCOHOL**	17	
Colophony	**ROSIN**	17	
Columbian spirit	**METHYL ALCOHOL**	17	
Columbian spirits	**METHYL ALCOHOL**	17	
COPPER SALT OF LONG CHAIN (C17+) ALKANOIC ACID		17	
CORN OIL		17	
COTTON SEED OIL		17	
Creosote salts	**NAPHTHALENE (MOLTEN)**	17	
CRESOLS (ALL ISOMERS)		17	2076
CRESYLIC ACID, DEPHENOLIZED		17	
Cresylic acids	**CRESOLS (ALL ISOMERS)**	17	
CRESYLIC ACID, SODIUM SALT SOLUTION		17	
Cresylols	**CRESOLS (ALL ISOMERS)**	17	
CROTONALDEHYDE		17	1143
Crotonic aldehyde	**CROTONALDEHYDE**	17	
Cumene	**PROPYLBENZENE (ALL ISOMERS)**	17	
Cumol	**PROPYLBENZENE (ALL ISOMERS)**	17	
Cyanoethylene	**ACRYLONITRILE**	17	
2-Cyano-2-propanol	**ACETONE CYANOHYDRIN**	17	
2-Cyanopropan-2-ol	**ACETONE CYANOHYDRIN**	17	
2-cyanopropene-1	**METHACRYLONITRILE**	17	
Cyclic propylene carbonate	**PROPYLENE CARBONATE**	18	

Index Name	Product Name	Chapter	UN No.
1,5,9-CYCLODODECATRIENE		17	
CYCLOHEPTANE		17	2241
Cyclohexamethylenimine	**HEXAMETHYLENEIMINE**	17	
CYCLOHEXANE		17	1145
CYCLOHEXANOL		17	
CYCLOHEXANONE		17	1915
CYCLOHEXANONE, CYCLOHEXANOL MIXTURE		17	
Cyclohexatriene	**BENZENE AND MIXTURES HAVING 10% BENZENE OR MORE**	17	
CYCLOHEXYL ACETATE		17	2243
CYCLOHEXYLAMINE		17	2357
Cyclohexyldimethylamine	**N,N-DIMETHYLCYCLOHEXYLAMINE**	17	
Cyclohexyl(ethyl)amine	**N-ETHYLCYCLOHEXYLAMINE**	17	
Cyclohexyl ketone	**CYCLOHEXANONE**	17	
Cyclohexylmethane	**METHYLCYCLOHEXANE**	17	
1,3-CYCLOPENTADIENE DIMER (MOLTEN)		17	
CYCLOPENTANE		17	1146
CYCLOPENTENE		17	2246
Cyclotetramethylene oxide	**TETRAHYDROFURAN**	17	
P-CYMENE		17	2046
Cymol	**P-CYMENE**	17	
Dalapon (ISO)	**2,2-DICHLOROPROPIONIC ACID**	17	
Deanol	**DIMETHYLETHANOLAMINE**	17	
DECAHYDRONAPHTHALENE		17	
DECANOIC ACID		17	
Decan-l-ol	**DECYL ALCOHOL (ALL ISOMERS)**	17	
n-Decanol	**DECYL ALCOHOL (ALL ISOMERS)**	17	
Decatoic acid	**DECANOIC ACID**	17	
DECENE		17	
Decoic acid	**DECANOIC ACID**	17	
DECYL ACRYLATE		17	
Decyl alcohol	**DECYL ALCOHOL (ALL ISOMERS)**	17	
DECYL ALCOHOL (ALL ISOMERS)		17	
Decylbenzene	**ALKYL(C9+)BENZENES**	17	
Decylic acid	**DECANOIC ACID**	17	
Decyl octyl adipate	**OCTYL DECYL ADIPATE**	17	
DECYLOXYTETRAHYDROTHIOPHENE DIOXIDE		17	
1-Deoxy-1-methylamino-D-glucitol	**N-METHYLGLUCAMINE SOLUTION (70% OR LESS)**	18	
Detergent alkylate	**ALKYL(C9+)BENZENES**	17	
Diacetic ester	**ETHYL ACETOACETATE**	17	
Diacetone	**DIACETONE ALCOHOL**	17	
DIACETONE ALCOHOL		17	
Di[alkyl/alkenyl(C10-C20)] hydrogen phosphite	**ALKYL(C10-C20, SATURATED AND UNSATURATED)**	17	
DIALKYL (C8-C9) DIPHENYLAMINES		17	
DIALKYL (C7-C13) PHTHALATES		17	
1,2-Diaminoethane	**ETHYLENEDIAMINE**	17	
1,6-Diaminohexane	**HEXAMETHYLENEDIAMINE (MOLTEN)**	17	
1,6-Diaminohexane solutions	**HEXAMETHYLENEDIAMINE SOLUTION**	17	
2,6-Diaminohexanioc acid	**L-LYSINE SOLUTION (60% OR LESS)**	17	
Diaminotoluene	**TOLUENEDIAMINE**	17	
2,4-Diaminotoluene	**TOLUENEDIAMINE**	17	
2,6-Diaminotoluene	**TOLUENEDIAMINE**	17	

Index Name	Product Name	Chapter	UN No.
4,6-Diamino-3,5,5-trimethylcyclohex-2-enone	**ISOPHORONEDIAMINE**	17	
3,6-Diazaoctane-1,8-diamine	**TRIETHYLENETETRAMINE**	17	
1,2-Dibromoethane	**ETHYLENE DIBROMIDE**	17	
DIBROMOMETHANE		17	
DIBUTYLAMINE		17	
Dibutylbenzene-1,2-dicarboxylate	**DIBUTYL PHTHALATE**	17	
Dibutyl carbinol	**NONYL ALCOHOL (ALL ISOMERS)**	17	
Dibutylcarbitol	**DIETHYLENE GLYCOL DIBUTYL ETHER**	17	
Dibutyl ether	**N-BUTYL ETHER**	17	
n-Dibutyl ether	**N-BUTYL ETHER**	17	
2,2'-Dibutylethyl ether	**DIETHYLENE GLYCOL DIBUTYL ETHER**	17	
Dibutyl hydrogen phosphite	**DIBUTYL HYDROGEN PHOSPHONATE**	17	
DIBUTYL HYDROGEN PHOSPHONATE		17	
2,6-DI-TERT-BUTYLPHENOL		17	
Dibutyl phosphonate	**DIBUTYL HYDROGEN PHOSPHONATE**	17	
DIBUTYL PHTHALATE		17	
Dibutyl ortho-phthalate	**DIBUTYL PHTHALATE**	17	
DICHLOROBENZENE (ALL ISOMERS)		17	
1,2-Dichlorobenzene	**DICHLOROBENZENE (ALL ISOMERS)**	17	
m-Dichlorobenzene	**DICHLOROBENZENE (ALL ISOMERS)**	17	
o-Dichlorobenzene	**DICHLOROBENZENE (ALL ISOMERS)**	17	
3,4-DICHLORO-1-BUTENE		17	
3,4-Dichlorobut-1-ene	**3,4-DICHLORO-1-BUTENE**	17	
2,2'-Dichlorodiethyl ether	**DICHLOROETHYL ETHER**	17	
Dichlorodiisopropyl ether	**2,2'-DICHLOROISOPROPYL ETHER**	17	
1,1-DICHLOROETHANE		17	2362
1,2-Dichloroethane	**ETHYLENE DICHLORIDE**	17	
1,1-Dichloroethene	**VINYLIDENE CHLORIDE**	17	
Dichloroether	**DICHLOROETHYL ETHER**	17	
1,1-Dichloroethylene	**VINYLIDENE CHLORIDE**	17	
DICHLOROETHYL ETHER		17	1916
2,2'-Dichloroethyl ether	**DICHLOROETHYL ETHER**	17	
Dichloroethyl oxide	**DICHLOROETHYL ETHER**	17	
1,6-DICHLOROHEXANE		17	
2,2'-DICHLOROISOPROPYL ETHER		17	2490
DICHLOROMETHANE		17	1593
2,4-DICHLOROPHENOL		17	2021
2,4-DICHLOROPHENOXYACETIC ACID, DIETHANOLAMINE SALT SOLUTION		17	
2,4-DICHLOROPHENOXYACETIC ACID, DIMETHYLAMINE SALT SOLUTION (70% OR LESS)		17	
2,4-DICHLOROPHENOXYACETIC ACID, TRIISOPROPANOLAMINE SALT SOLUTION		17	
1,1-DICHLOROPROPANE		17	
1,2-DICHLOROPROPANE		17	1279
Dichloropropane / dichloropropene mixtures	**DICHLOROPROPENE/DICHLOROPROPANE MIXTURES**	17	
2,2-Dichloropropanoic acid	**2,2-DICHLOROPROPIONIC ACID**	17	
1,3-DICHLOROPROPENE		17	2047
DICHLOROPROPENE/DICHLOROPROPANE MIXTURES		17	
2,2-DICHLOROPROPIONIC ACID		17	
Dichloropropylene	**1,3-DICHLOROPROPENE**	17	

Index Name	Product Name	Chapter	UN No.
1,4-Dicyanobutane	**ADIPONITRILE**	17	
Dicyclopentadiene	**1,3-CYCLOPENTADIENE DIMER (MOLTEN)**	17	
Didecyl phthalate	**DIALKYL (C7-C13) PHTHALATES**	17	
Didodecyl phthalate	**DIALKYL (C7-C13) PHTHALATES**	17	
DIETHANOLAMINE		17	
DIETHYLAMINE		17	1154
DIETHYLAMINOETHANOL		17	2686
2-Diethylaminoethanol	**DIETHYLAMINOETHANOL**	17	
2,6-DIETHYLANILINE		17	
DIETHYLBENZENE		17	2049
Diethylcarbitol	**DIETHYLENE GLYCOL DIETHYL ETHER**	17	
Diethyl 'carbitol'	**DIETHYLENE GLYCOL DIETHYL ETHER**	17	
1,4-Diethylene dioxide	**1,4-DIOXANE**	17	
Diethylene ether	**1,4-DIOXANE**	17	
DIETHYLENE GLYCOL		18	
Diethylene glycol butyl ether	**POLY(2-8)ALKYLENE GLYCOL MONOALKYL(C1-C6) ETHER**	17	
Diethylene glycol butyl ether acetate	**POLY(2-8)ALKYLENE GLYCOL MONOALKYL (C1-C6) ETHER**	17	
DIETHYLENE GLYCOL DIBUTYL ETHER		17	
DIETHYLENE GLYCOL DIETHYL ETHER		17	
Diethylene glycol ethyl ether	**POLY(2-8)ALKYLENE GLYCOL MONOALKYL(C1-C6) ETHER**	17	
Diethylene glycol ethyl ether acetate	**POLY(2-8)ALKYLENE GLYCOL MONOALKYL (C1-C6) ETHER**	17	
Diethylene glycol methyl ether	**POLY(2-8)ALKYLENE GLYCOL MONOALKYL(C1-C6) ETHER**	17	
Diethylene glycol methyl ether acetate	**POLY(2-8)ALKYLENE GLYCOL MONOALKYL (C1-C6) ETHER**	17	
Diethylene glycol monobutyl ether	**POLY(2-8)ALKYLENE GLYCOL MONOALKYL(C1-C6) ETHER**	17	
Diethylene glycol monobutyl ether acetate	**POLY(2-8)ALKYLENE GLYCOL MONOALKYL (C1-C6) ETHER**	17	
Diethylene glycol monoethyl ether	**POLY(2-8)ALKYLENE GLYCOL MONOALKYL(C1-C6) ETHER**	17	
Diethylene glycol monoethyl ether acetate	**POLY(2-8)ALKYLENE GLYCOL MONOALKYL (C1-C6) ETHER**	17	
Diethylene glycol monomethyl ether	**POLY(2-8)ALKYLENE GLYCOL MONOALKYL(C1-C6) ETHER**	17	
Diethylene glycol monomethyl ether acetate	**POLY(2-8)ALKYLENE GLYCOL MONOALKYL (C1-C6) ETHER**	17	
DIETHYLENE GLYCOL PHTHALATE		17	
Diethylene oxide	**1,4-DIOXANE**	17	
DIETHYLENETRIAMINE		17	2079
DIETHYLENETRIAMINEPENTAACETIC ACID, PENTASODIUM SALT SOLUTION		17	
N,N-Diethylethanamine	**TRIETHYLAMINE**	17	
Diethylethanolamine	**DIETHYLAMINOETHANOL**	17	
N,N-Diethylethanolamine	**DIETHYLAMINOETHANOL**	17	
DIETHYL ETHER		17	1155
N,N-Diethylethylamine	**TRIETHYLAMINE**	17	
DI-(2-ETHYLHEXYL) ADIPATE		17	
DI-(2-ETHYLHEXYL) PHOSPHORIC ACID		17	1902
Diethyl oxide	**DIETHYL ETHER**	17	
DIETHYL PHTHALATE		17	
DIETHYL SULPHATE		17	1594
Diformyl	**GLYOXAL SOLUTION (40% OR LESS)**	17	
DIGLYCIDYL ETHER OF BISPHENOL A		17	
DIGLYCIDYL ETHER OF BISPHENOL F		17	
Diglycol	**DIETHYLENE GLYCOL**	18	
Diglycolamine	**2-(2-AMINOETHOXY) ETHANOL**	17	
Diglycol phthalate	**DIETHYLENE GLYCOL PHTHALATE**	17	
DIHEPTYL PHTHALATE		17	
Dihexyl	**DODECANE (ALL ISOMERS)**	17	
DI-N-HEXYL ADIPATE		17	

Index Name	Product Name	Chapter	UN No.
DIHEXYL PHTHALATE		17	
1,3-Dihydroisobenzofuran-1,3-dione	**PHTHALIC ANHYDRIDE (MOLTEN)**	17	
2,3-Dihydroxybutane	**BUTYLENE GLYCOL**	17	
2,2'-Dihydroxydiethylamine	**DIETHANOLAMINE**	17	
Di-(2-hydroxyethyl)amine	**DIETHANOLAMINE**	17	
Dihydroxyethyl ether	**DIETHYLENE GLYCOL**	18	
Dihydroxyhexane	**HEXAMETHYLENE GLYCOL**	17	
1,2-Dihydroxypropane	**PROPYLENE GLYCOL**	18	
Diisobutene	**DIISOBUTYLENE**	17	
DIISOBUTYLAMINE		17	2361
Diisobutylcarbinol	**NONYL ALCOHOL (ALL ISOMERS)**	17	
DIISOBUTYLENE		17	2050
alpha-Diisobutylene	**DIISOBUTYLENE**	17	
beta-Diisobutylene	**DIISOBUTYLENE**	17	
DIISOBUTYL KETONE		17	
DIISOBUTYL PHTHALATE		17	
2,4-diisocyanato-1-methylbenzene	**TOLUENE DIISOCYANATE**	17	
2,4-Diisocyanatotoluene	**TOLUENE DIISOCYANATE**	17	
Diisodecyl phthalate	**DIALKYL (C7-C13) PHTHALATES**	17	
DIISONONYL ADIPATE		17	
Diisononyl phthalate	**DIALKYL (C7-C13) PHTHALATES**	17	
DIISOOCTYL PHTHALATE		17	
DIISOPROPANOLAMINE		17	
Diisopropylacetone	**DIISOBUTYL KETONE**	17	
DIISOPROPYLAMINE		17	1158
DIISOPROPYLBENZENE (ALL ISOMERS)		17	
Diisopropyl ether	**ISOPROPYL ETHER**	17	
DIISOPROPYLNAPHTHALENE		17	3082
Diisopropyl oxide	**ISOPROPYL ETHER**	17	
N,N-DIMETHYLACETAMIDE		17	
N,N-DIMETHYLACETAMIDE SOLUTION (40% OR LESS)		17	
Dimethylacetylene carbinol	**2-METHYL-2-HYDROXY-3-BUTYNE**	17	
DIMETHYL ADIPATE		17	
DIMETHYLAMINE SOLUTION (45% OR LESS)		17	1160
DIMETHYLAMINE SOLUTION (GREATER THAN 45% BUT NOT GREATER THAN 55%)		17	1160
DIMETHYLAMINE SOLUTION (GREATER THAN 55% BUT NOT GREATER THAN 65%)		17	1160
Dimethylaminoethanol	**DIMETHYLETHANOLAMINE**	17	
2-Dimethylaminoethanol	**DIMETHYLETHANOLAMINE**	17	
Dimethylbenzenes	**XYLENES**	17	
1,3-Dimethylbutanol	**METHYLAMYL ALCOHOL**	17	
1,3-Dimethylbutan-1-ol	**METHYLAMYL ALCOHOL**	17	
1,3-Dimethylbutyl acetate	**METHYLAMYL ACETATE**	17	
Dimethylcarbinol	**ISOPROPYL ALCOHOL**	18	
N,N-DIMETHYLCYCLOHEXYLAMINE		17	2264
DIMETHYL DISULPHIDE		17	2381
N,N-Dimethyldodecanamine	**ALKYL (C12+) DIMETHYLAMINE**	17	
N,N-Dimethyldodecan-1-amine	**N,N-DIMETHYLDODECYLAMINE**	17	
N,N-DIMETHYLDODECYLAMINE		17	

Index Name	Product Name	Chapter	UN No.
1,1-Dimethylethanol	**TERT-BUTYL ALCOHOL**	17	
DIMETHYLETHANOLAMINE		17	2051
1,1-Dimethylethyl alcohol	**TERT-BUTYL ALCOHOL**	17	
Dimethyl ethyl carbinol	**TERT-AMYL ALCOHOL**	17	
1,1-dimethylethyl methyl ether	**METHYL TERT-BUTYL ETHER**	17	
Dimethyl formaldehyde	**ACETONE**	18	
DIMETHYLFORMAMIDE		17	2265
DIMETHYL GLUTARATE		17	
2,6-Dimethyl-4-heptanone	**DIISOBUTYL KETONE**	17	
2,6-Dimethylheptan-4-one	**DIISOBUTYL KETONE**	17	
N,N-Dimethylhexanamine	**ALKYL (C12+) DIMETHYLAMINE**	17	
DIMETHYL HYDROGEN PHOSPHITE		17	
Dimethylhydroxybenzenes	**XYLENOL**	17	
1,1'-Dimethyl-2,2'-iminodiethanol	**DIISOPROPANOLAMINE**	17	
Dimethyl ketal	**ACETONE**	18	
Dimethyl ketone	**ACETONE**	18	
Dimethyllaurylamine	**N,N-DIMETHYLDODECYLAMINE**	17	
N,N-Dimethylmethanamine	**TRIMETHYLAMINE SOLUTION (30% OR LESS)**	17	
N,N-Dimethylmethylamine	**TRIMETHYLAMINE SOLUTION (30% OR LESS)**	17	
6,6-Dimethyl-2-methylenebicyclo[3.1.1]heptane	**BETA-PINENE**	17	
DIMETHYL OCTANOIC ACID		17	
2,2-Dimethyloctanoic acid	**NEODECANOIC ACID**	17	
2,3-Dimethylphenol	**XYLENOL**	17	
2,4-Dimethylphenol	**XYLENOL**	17	
2,5-Dimethylphenol	**XYLENOL**	17	
2,6-Dimethylphenol	**XYLENOL**	17	
3,4-Dimethylphenol	**XYLENOL**	17	
3,5-Dimethylphenol	**XYLENOL**	17	
Dimethylphenols	**XYLENOL**	17	
Dimethylphenyl phosphate (3:1)	**TRIXYLYL PHOSPHATE**	17	
DIMETHYL PHTHALATE		17	
DIMETHYLPOLYSILOXANE		17	
2,2-Dimethylpropane	**PENTANE (ALL ISOMERS)**	17	
2,2-DIMETHYLPROPANE-1,3-DIOL (MOLTEN OR SOLUTION)		17	
2,2-Dimethylpropanoic acid	**TRIMETHYLACETIC ACID**	17	
1,1-Dimethylpropargyl alcohol	**2-METHYL-2-HYDROXY-3-BUTYNE**	17	
2,2-Dimethylpropionic acid	**TRIMETHYLACETIC ACID**	17	
1,1-Dimethylpropynol	**2-METHYL-2-HYDROXY-3-BUTYNE**	17	
DIMETHYL SUCCINATE		17	
N,N-Dimethyltetradecanamine	**ALKYL (C12+) DIMETHYLAMINE**	17	
Dimethyltetradecylamine	**ALKYL (C12+) DIMETHYLAMINE**	17	
dimethyl-p-tolyloxy}poly[oxy-p-phenyleneisopropylidene-p-phenylenoxy(2-hydroxytrimethylene)]	**DIGLYCIDYL ETHER OF BISPHENOL A**	17	
3,9-Dimethyltricyclo[5.2.1.0;2,6]deca-3,8-diene	**METHYLCYCLOPENTADIENE DIMER**	17	
Dimethyltrimethylene glycol	**2,2-DIMETHYLPROPANE-1,3-DIOL (MOLTEN OR SOLUTION)**	17	
Dimetylacetamide acetate	**N,N-DIMETHYLACETAMIDE**	17	
DINITROTOLUENE (MOLTEN)		17	1600
Dinonyl phthalate	**DIALKYL (C7-C13) PHTHALATES**	17	
DINONYL PHTHALATE		17	
3,6-Dioaxaoctane-1,8-diol	**TRIETHYLENE GLYCOL**	18	
Dioctyl adipate	**DI-(2-ETHYLHEXYL) ADIPATE**	17	
Dioctyl hydrogen phosphate	**DI-(2-ETHYLHEXYL) PHOSPHORIC ACID**	17	

Index Name	Product Name	Chapter	UN No.
Dioctyl phosphoric acid	**DI-(2-ETHYLHEXYL) PHOSPHORIC ACID**	17	
DIOCTYL PHTHALATE		17	
2,4-D-diolamine	**2,4-DICHLOROPHENOXYACETIC ACID, DIETHANOLAMINE**	17	
1,4-Dioxan	**1,4-DIOXANE**	17	
1,4-DIOXANE		17	1165
Dioxolanone	**PROPYLENE CARBONATE**	18	
1,3-Dioxolan-2-one	**ETHYLENE CARBONATE**	18	
Dioxolone-2	**ETHYLENE CARBONATE**	18	
1,1-Dioxothiolan	**SULPHOLANE**	17	
Dioxyethylene ether	**1,4-DIOXANE**	17	
DIPENTENE		17	2052
DIPHENYL		17	
DIPHENYLAMINE (MOLTEN)		17	
DIPHENYLAMINE, REACTION PRODUCT WITH 2,2,4-TRIMETHYLPENTENE		17	
DIPHENYLAMINES, ALKYLATED		17	
DIPHENYL/DIPHENYL ETHER MIXTURES		17	
Diphenyl/diphenyl oxide mixtures	**DIPHENYL/DIPHENYL ETHER MIXTURES**	17	
Diphenyl dodecyl ether disulphonate solution	**DODECYL DIPHENYL ETHER DISULPHONATE SOLUTION**	17	
Diphenyl dodecyl oxide disulphonate solution	**DODECYL DIPHENYL ETHER DISULPHONATE SOLUTION**	17	
DIPHENYL ETHER		17	
DIPHENYL ETHER/DIPHENYL PHENYL ETHER MIXTURE		17	
DIPHENYLMETHANE DIISOCYANATE		17	2489
DIPHENYLOL PROPANE-EPICHLOROHYDRIN RESINS		17	
Diphenyl oxide	**DIPHENYL ETHER**	17	
Diphenyl oxide / diphenyl phenyl ether mixture	**DIPHENYL ETHER/DIPHENYL PHENYL ETHER MIXTURE**	17	
Dipropylamine	**DI-N-PROPYLAMINE**	17	
DI-N-PROPYLAMINE		17	2383
n-Dipropylamine	**DI-N-PROPYLAMINE**	17	
DIPROPYLENE GLYCOL		17	
Dipropylene glycol methyl ether	**POLY(2-8)ALKYLENE GLYCOL MONOALKYL(C1-C6) ETHER**	17	
Dipropylene glycol monomethyl ether	**POLY(2-8)ALKYLENE GLYCOL MONOALKYL(C1-C6) ETHER**	17	
Disodium carbonate	**SODIUM CARBONATE SOLUTION**	17	
Distillates (Petroleum), Steam Cracked, C8 - C12 Fraction	**RESIN OIL, DISTILLED**	17	
RESIN OIL, DISTILLED		17	
DITHIOCARBAMATE ESTER (C7-C35)		17	
DITRIDECYL ADIPATE		17	
Ditridecyl adipate	**DITRIDECYL ADIPATE**	17	
DITRIDECYL PHTHALATE		17	
DIUNDECYL PHTHALATE		17	
dl-Lactic acid	**LACTIC ACID**	17	
dl-p-Mentha-1,8-diene	**DIPENTENE**	17	
Docosan-1-ol	**ALCOHOLS (C13+)**	17	
1-Docosanol	**ALCOHOLS (C13+)**	17	
DODECANE (ALL ISOMERS)		17	
TERT-DODECANETHIOL		17	
Dodecanoic acid	**LAURIC ACID**	17	
Dodecan-1-ol	**DODECYL ALCOHOL**	17	
1-Dodecanol	**DODECYL ALCOHOL**	17	
n-Dodecanol	**DODECYL ALCOHOL**	17	
DODECENE (ALL ISOMERS)		17	

Index Name	Product Name	Chapter	UN No.
Dodecyl, Tetradecyl, hexadecyl-dimethylamine mixture	**ALKYL (C12+) DIMETHYLAMINE**	17	
DODECYL ALCOHOL		17	
n-Dodecyl alcohol	**DODECYL ALCOHOL**	17	
DODECYLAMINE/TETRADECYLAMINE MIXTURE		17	
DODECYLBENZENE		17	
Dodecylbenzenesulphonic acid (contains 1.5% sulphuric acid)	**ALKYL (C11-C17) BENZENE SULPHONIC ACID**	17	
Dodecyldimethylamine	**ALKYL (C12+) DIMETHYLAMINE**	17	
DODECYL DIPHENYL ETHER DISULPHONATE SOLUTION		17	
Dodecyl diphenyl oxide disulphonate solution	**DODECYL DIPHENYL ETHER DISULPHONATE SOLUTION**	17	
Dodecylene	**DODECENE (ALL ISOMERS)**	17	
DODECYL HYDROXYPROPYL SULPHIDE		17	
Dodecylic acid	**LAURIC ACID**	17	
tert-Dodecyl mercaptan	**TERT-DODECANETHIOL**	17	
DODECYL METHACRYLATE		17	
Dodecyl-2-methyl-2-propenoate	**DODECYL METHACRYLATE**	17	
Dodecyl-2-methylprop-2-enoate	**DODECYL METHACRYLATE**	17	
DODECYL/OCTADECYL METHACRYLATE (MIXTURE)		17	
DODECYL/PENTADECYL METHACRYLATE MIXTURE		17	
DODECYL PHENOL		17	
2-Dodecylthio-1-methylethanol	**DODECYL HYDROXYPROPYL SULPHIDE**	17	
1-Dodecylthiopropan-2-ol	**DODECYL HYDROXYPROPYL SULPHIDE**	17	
DODECYL XYLENE		17	
Drilling brine: potassium chloride solution	**POTASSIUM CHLORIDE SOLUTION**	17	
DRILLING BRINES (CONTAINING ZINC SALTS)		17	
DRILLING BRINES, INCLUDING:CALCIUM BROMIDE SOLUTION, CALCIUM CHLORIDE SOLUTION AND SODIUM CHLORIDE SOLUTION		17	
Dutch liquid	**ETHYLENE DICHLORIDE**	17	
Dutch oil	**ETHYLENE DICHLORIDE**	17	
(E)-But-2-enal	**CROTONALDEHYDE**	17	
Enanthic acid	**N-HEPTANOIC ACID**	17	
Enanthyl alcohol	**HEPTANOL (ALL ISOMERS) (D)**	17	
Enanthylic acid	**N-HEPTANOIC ACID**	17	
Engravers' acid	**NITRIC ACID (70% AND OVER)**	17	
E-1,3-Pentadiene	**1,3-PENTADIENE**	17	
EPICHLOROHYDRIN		17	2023
1,2-Epoxybutane	**1,2-BUTYLENE OXIDE**	17	
1,4-epoxybutane	**TETRAHYDROFURAN**	17	
1,2-Epoxypropane	**PROPYLENE OXIDE**	17	
2,3-Epoxy propyl ester of mixed trialkyl acetic acids	**GLYCIDYL ESTER OF C10 TRIALKYLACETIC ACID**	17	
2,3-Epoxypropyl neodecanoate	**GLYCIDYL ESTER OF C10 TRIALKYLACETIC ACID**	17	
alpha-2,3-epoxypropyl-omega-{alpha-[4-(2,3-epoxypropoxy)phenyl]-p-tolyloxy}=	**DIGLYCIDYL ETHER OF BISPHENOL F**	17	
alpha-2,3-epoxypropyl-omega-{alpha-[4-(2,3-epoxypropyl)phenyl]-alpha,alpha-	**DIGLYCIDYL ETHER OF BISPHENOL A**	17	
EPTC	**S-ETHYL DIPROPYLTHIOCARBAMATE**	17	
Essence of Mirbane	**NITROBENZENE**	17	

Index Name	Product Name	Chapter	UN No.
Essence of Myrbane	**NITROBENZENE**	17	
Ethanamine solutions, 72% or less	**ETHYLAMINE SOLUTIONS (72% OR LESS)**	17	
Ethanecarbonitrile	**PROPIONITRILE**	17	
Ethanedial	**GLYOXAL SOLUTION (40% OR LESS)**	17	
1,2-Ethanediol	**ETHYLENE GLYCOL**	17	
Ethanoic acid	**ACETIC ACID**	17	
Ethanoic anhydride	**ACETIC ANHYDRIDE**	17	
Ethanol	**ETHYL ALCOHOL**	18	
ETHANOLAMINE		17	2491
ethenyl acetate	**VINYL ACETATE**	17	
ethenyl ethanoate	**VINYL ACETATE**	17	
Ether	**DIETHYL ETHER**	17	
Ethinyl trichloride	**TRICHLOROETHYLENE**	17	
2-Ethoxyethanol	**ETHYLENE GLYCOL MONOALKYL ETHERS**	17	
2-(2-Ethoxyethoxy)ethanol	**POLY(2-8)ALKYLENE GLYCOL MONOALKYL(C1-C6) ETHER**	17	
2-(2-Ethoxyethoxy)ethyl acetate	**POLY(2-8)ALKYLENE GLYCOL MONOALKYL (C1-C6) ETHER**	17	
2-ETHOXYETHYL ACETATE		17	1172
ETHOXYLATED LONG CHAIN (C16+) ALKYLOXYALKYLAMINE		17	
2-Ethoxy-2-methylpropane	**ETHYL TERT-BUTYL ETHER**	17	
1-Ethoxypropan-2-ol	**PROPYLENE GLYCOL MONOALKYL ETHER**	17	
ETHYL ACETATE		17	
ETHYL ACETOACETATE		17	
Ethyl acetone	**METHYL PROPYL KETONE**	18	
ETHYL ACRYLATE		17	1917
ETHYL ALCOHOL		18	
ETHYLAMINE		17	1036
ETHYLAMINE SOLUTIONS (72% OR LESS)		17	2270
Ethylaminocyclohexane	**N-ETHYLCYCLOHEXYLAMINE**	17	
ETHYL AMYL KETONE		17	2271
ETHYLBENZENE		17	1175
Ethyl benzol	**ETHYLBENZENE**	17	
Ethyl butanoate	**ETHYL BUTYRATE**	17	
ETHYL TERT-BUTYL ETHER		17	1993
ETHYL BUTYRATE		17	1180
2-Ethylcaproic acid	**2-ETHYLHEXANOIC ACID**	17	
Ethyl carbinol	**N-PROPYL ALCOHOL**	17	
Ethyl cyanide	**PROPIONITRILE**	17	
ETHYLCYCLOHEXANE		17	
Ethyl(cyclohexyl)amine	**N-ETHYLCYCLOHEXYLAMINE**	17	
N-ETHYLCYCLOHEXYLAMINE		17	
Ethyldimethylmethane	**PENTANE (ALL ISOMERS)**	17	
S-Ethyl dipropylcarbamothioate	**S-ETHYL DIPROPYLTHIOCARBAMATE**	17	
S-Ethyl dipropyldithiocarbamate	**S-ETHYL DIPROPYLTHIOCARBAMATE**	17	
S-ETHYL DIPROPYLTHIOCARBAMATE		17	
Ethylene alcohol	**ETHYLENE GLYCOL**	17	
Ethylene bisiminodiacetic acid tetrasodium salt solution	**ETHYLENEDIAMINETETRAACETIC ACID, TETRASODIUM**	17	
Ethylene bromide	**ETHYLENE DIBROMIDE**	17	
ETHYLENE CARBONATE		18	
Ethylenecarboxylic acid	**ACRYLIC ACID**	17	
Ethylene chloride	**ETHYLENE DICHLORIDE**	17	
ETHYLENE CHLOROHYDRIN		17	1135

Index Name	Product Name	Chapter	UN No.
ETHYLENE CYANOHYDRIN		17	
Ethylene diacetate	**ETHYLENE GLYCOL DIACETATE**	17	
ETHYLENEDIAMINE		17	1604
ETHYLENEDIAMINETETRAACETIC ACID, TETRASODIUM SALT SOLUTION		17	
ETHYLENE DIBROMIDE		17	1605
ETHYLENE DICHLORIDE		17	1184
2,2'-Ethylenedi-iminodi(ethylamine)	**TRIETHYLENETETRAMINE**	17	
Ethylenedinitrilotetraacetic acid tetrasodium salt solution	**ETHYLENEDIAMINETETRAACETIC ACID, TETRASODIUM**	17	
2,2'-Ethylenedioxydiethanol	**TRIETHYLENE GLYCOL**	18	
ETHYLENE GLYCOL		17	
ETHYLENE GLYCOL ACETATE		17	
Ethylene glycol acrylate	**2-HYDROXYETHYL ACRYLATE**	17	
Ethylene glycol butyl ether	**ETHYLENE GLYCOL MONOALKYL ETHERS**	17	
ETHYLENE GLYCOL BUTYL ETHER ACETATE		17	
Ethylene glycol tert-butyl ether	**ETHYLENE GLYCOL MONOALKYL ETHERS**	17	
ETHYLENE GLYCOL DIACETATE		17	
Ethylene glycol ethyl ether	**ETHYLENE GLYCOL MONOALKYL ETHERS**	17	
Ethylene glycol ethyl ether acetate	**2-ETHOXYETHYL ACETATE**	17	
Ethylene glycol isopropyl ether	**ETHYLENE GLYCOL MONOALKYL ETHERS**	17	
Ethylene glycol methyl ether	**ETHYLENE GLYCOL MONOALKYL ETHERS**	17	
ETHYLENE GLYCOL METHYL ETHER ACETATE		17	
ETHYLENE GLYCOL MONOALKYL ETHERS		17	
Ethylene glycol monobutyl ether	**ETHYLENE GLYCOL MONOALKYL ETHERS**	17	
Ethylene glycol mono tert-butyl ether	**ETHYLENE GLYCOL MONOALKYL ETHERS**	17	
Ethylene glycol monoethyl ether	**ETHYLENE GLYCOL MONOALKYL ETHERS**	17	
Ethylene glycol monoethyl ether acetate	**2-ETHOXYETHYL ACETATE**	17	
Ethylene glycol monomethyl ether	**ETHYLENE GLYCOL MONOALKYL ETHERS**	17	
Ethylene glycol monomethyl ether acetate	**ETHYLENE GLYCOL METHYL ETHER ACETATE**	17	
Ethylene glycol monophenyl ether	**ETHYLENE GLYCOL PHENYL ETHER**	17	
ETHYLENE GLYCOL PHENYL ETHER		17	
ETHYLENE GLYCOL PHENYL ETHER/DIETHYLENE GLYCOL PHENYL ETHER MIXTURE		17	
ETHYLENE OXIDE/PROPYLENE OXIDE MIXTURE WITH AN ETHYLENE OXIDE CONTENT OF NOT MORE THAN 30% BY MASS		17	2983
Ethylene tetrachloride	**PERCHLOROETHYLENE**	17	
Ethylene trichloride	**1,1,1-TRICHLOROETHANE**	17	
Ethylene trichloride	**TRICHLOROETHYLENE**	17	
ETHYLENE-VINYL ACETATE COPOLYMER (EMULSION)		17	
Ethyl ethanoate	**ETHYL ACETATE**	17	
Ethyl ether	**DIETHYL ETHER**	17	
ETHYL-3-ETHOXYPROPIONATE		17	
Ethyl fluid	**MOTOR FUEL ANTI-KNOCK COMPOUNDS (CONTAINING**	17	
Ethylformic acid	**PROPIONIC ACID**	17	
Ethyl glycol	**ETHYLENE GLYCOL MONOALKYL ETHERS**	17	
2-Ethylhexaldehyde	**OCTYL ALDEHYDES**	17	
2-Ethylhexanal	**OCTYL ALDEHYDES**	17	
2-ETHYLHEXANOIC ACID		17	

Index Name	Product Name	Chapter	UN No.
2-Ethylhexanol	**OCTANOL (ALL ISOMERS)**	17	
2-Ethylhexenal	**2-ETHYL-3-PROPYLACROLEIN**	17	
2-Ethylhex-2-enal	**2-ETHYL-3-PROPYLACROLEIN**	17	
2-Ethylhexoic acid	**OCTANOIC ACID (ALL ISOMERS)**	17	
2-ETHYLHEXYL ACRYLATE		17	
2-Ethylhexyl alcohol	**OCTANOL (ALL ISOMERS)**	17	
2-ETHYLHEXYLAMINE		17	2276
2-ETHYL-2-(HYDROXYMETHYL) PROPANE-1,3-DIOL (C8-C10) ESTER		17	
Ethylic acid	**ACETIC ACID**	17	
5-Ethylidenebicyclo(2,2,1)hept-2-ene	**ETHYLIDENE NORBORNENE**	17	
Ethylidene chloride	**1,1-DICHLOROETHANE**	17	
Ethylidene dichloride	**1,1-DICHLOROETHANE**	17	
ETHYLIDENE NORBORNENE		17	
ETHYL METHACRYLATE		17	2277
N-ETHYLMETHYLALLYLAMINE		17	
N-Ethyl-2-methylallylamine	**N-ETHYLMETHYLALLYLAMINE**	17	
2-Ethyl-6-methylaniline	**2-METHYL-5-ETHYL PYRIDINE**	17	
2-Ethyl-6-methylbenzenamine	**2-METHYL-6-ETHYL ANILINE**	17	
Ethyl methyl ketone	**METHYL ETHYL KETONE**	17	
5-Ethyl-2-methylpyridine	**2-METHYL-5-ETHYL PYRIDINE**	17	
Ethyl oxide	**DIETHYL ETHER**	17	
Ethyl phosphate	**TRIETHYL PHOSPHATE**	17	
Ethyl phthalate	**DIETHYL PHTHALATE**	17	
5-Ethyl-2-picoline	**2-METHYL-5-ETHYL PYRIDINE**	17	
3-Ethylpropan-1-ol	**PROPYLENE GLYCOL MONOALKYL ETHER**	17	
Ethyl propenoate	**ETHYL ACRYLATE**	17	
ETHYL PROPIONATE		17	
2-ETHYL-3-PROPYLACROLEIN		17	
Ethyl sulphate	**DIETHYL SULPHATE**	17	
ETHYL TOLUENE		17	
5-Ethyl-o-toluidine	**2-METHYL-5-ETHYL PYRIDINE**	17	
6-Ethyl-2-toluidine	**2-METHYL-6-ETHYL ANILINE**	17	
6-Ethyl-o-toluidine	**2-METHYL-6-ETHYL ANILINE**	17	
Ethyl vinyl ether	**VINYL ETHYL ETHER**	17	
Ethynyldimethylcarbinol	**2-METHYL-2-HYDROXY-3-BUTYNE**	17	
FATTY ACID (SATURATED C13+)		17	
FATTY ACID METHYL ESTERS (M)		17	
FATTY ACIDS, 12+		17	
FATTY ACIDS, C8-C10		17	
FATTY ACIDS, ESSENTIALLY LINEAR (C6-C18) 2-ETHYLHEXYL ESTER.		17	
FATTY ACIDS, C16+		17	
Feeding corn molasses	**MOLASSES**	18	
Fermentation alcohol	**ETHYL ALCOHOL**	18	
FERRIC CHLORIDE SOLUTIONS		17	2582
FERRIC NITRATE/NITRIC ACID SOLUTION		17	
FISH OIL		17	
FLUOROSILICIC ACID (20-30%) IN WATER SOLUTION		17	1778
FORMALDEHYDE SOLUTIONS (45% OR LESS)		17	1198, 220
Formaldehyde trimer	**1,3,5-TRIOXANE**	17	

Index Name	Product Name	Chapter	UN No.
Formalin	**FORMALDEHYDE SOLUTIONS (45% OR LESS)**	17	
FORMAMIDE		17	
Formdimethylamide	**DIMETHYLFORMAMIDE**	17	
FORMIC ACID		17	1779
Formic aldehyde	**FORMALDEHYDE SOLUTIONS (45% OR LESS)**	17	
Formylformic acid	**GLYOXYLIC ACID SOLUTION (50 % OR LESS)**	17	
Fural	**FURFURAL**	17	
2-Furaldehyde	**FURFURAL**	17	
Furan-2,5-dione	**MALEIC ANHYDRIDE**	17	
2,5-Furandione	**MALEIC ANHYDRIDE**	17	
FURFURAL		17	1199
2-Furfuraldehyde	**FURFURAL**	17	
FURFURYL ALCOHOL		17	2874
Furylcarbinol	**FURFURYL ALCOHOL**	17	
Fused poly(2+)cyclic aromatic hydrocarbons.	**POLY(2+)CYCLIC AROMATICS**	17	
Gaultheria oil	**METHYL SALICYLATE**	17	
Glacial acetic acid	**ACETIC ACID**	17	
D-Glucitol	**SORBITOL SOLUTION**	18	
GLUCITOL/GLYCEROL BLEND PROPOXYLATED (CONTAINING LESS THAN 10% AMINES)		17	
Glucitol solution	**SORBITOL SOLUTION**	18	
D-Glucopyranoside C8-C14 alkyl	**ALKYL (C8-C10)/(C12-C14):(40% OR LESS/60% OR MORE)**	17	
D-Glucopyranoside C8-C14 alkyl	**ALKYL (C8-C10)/(C12-C14):(60% OR MORE/40% OR LESS)**	17	
GLUCOSE SOLUTION		18	
GLUTARALDEHYDE SOLUTIONS (50% OR LESS)		17	
Glycerin	**GLYCERINE**	18	
GLYCERINE		18	
Glycerin triacetate	**GLYCERYL TRIACETATE**	17	
Glyceritol	**GLYCERINE**	18	
Glycerol	**GLYCERINE**	18	
GLYCEROL MONOOLEATE		17	
Glycerol oleate	**GLYCEROL MONOOLEATE**	17	
Glycerol 1-oleate	**GLYCEROL MONOOLEATE**	17	
GLYCEROL PROPOXYLATED		17	
GLYCEROL, PROPOXYLATED AND ETHOXYLATED		17	
GLYCEROL/SUCROSE BLEND PROPOXYLATED AND ETHOXYLATED		17	
Glycerol triacetate	**GLYCERYL TRIACETATE**	17	
GLYCERYL TRIACETATE		17	
GLYCIDYL ESTER OF C10 TRIALKYLACETIC ACID		17	
Glycidyl neodecanoate	**GLYCIDYL ESTER OF C10 TRIALKYLACETIC ACID**	17	
Glycine soda solution	**GLYCINE, SODIUM SALT SOLUTION**	17	
GLYCINE, SODIUM SALT SOLUTION		17	
Glycol	**ETHYLENE GLYCOL**	17	
Glycol carbonate	**ETHYLENE CARBONATE**	18	
Glycol chlorohydrin	**ETHYLENE CHLOROHYDRIN**	17	
Glycol dichloride	**ETHYLENE DICHLORIDE**	17	
GLYCOLIC ACID SOLUTION (70% OR LESS)		17	3265
Glycol monobutyl ether	**ETHYLENE GLYCOL MONOALKYL ETHERS**	17	
Glycols, polyethylene mono(p-nonylphenyl) ether	**ALKARYL POLYETHERS (C9-C20)**	17	

Index Name	Product Name	Chapter	UN No.
Glycyl alcohol	**GLYCERINE**	18	
Glyoxaldehyde	**GLYOXAL SOLUTION (40% OR LESS)**	17	
Glyoxalic acid	**GLYOXYLIC ACID SOLUTION (50 % OR LESS)**	17	
GLYOXAL SOLUTION (40% OR LESS)		17	
GLYOXYLIC ACID SOLUTION (50 % OR LESS)		17	1760
Glyphosate	**GLYPHOSATE SOLUTION (NOT CONTAINING SURFACTANT)**	17	
Glyphosate-mono(isopropylammonium)	**GLYPHOSATE SOLUTION (NOT CONTAINING SURFACTANT)**	17	
GLYPHOSATE SOLUTION (NOT CONTAINING SURFACTANT)		17	
Grain alcohol	**ETHYL ALCOHOL**	18	
GROUNDNUT OIL		17	
Hemimellitine	**TRIMETHYLBENZENE (ALL ISOMERS)**	17	
Hendecanoic acid	**UNDECANOIC ACID**	17	
1-Hendecanol	**UNDECYL ALCOHOL**	17	
Heptamethylene	**CYCLOHEPTANE**	17	
HEPTANE (ALL ISOMERS)		17	1206
1-Heptanecarboxylic acid	**OCTANOIC ACID (ALL ISOMERS)**	17	
3-Heptanecarboxylic acid	**OCTANOIC ACID (ALL ISOMERS)**	17	
Heptanoic acid	**N-HEPTANOIC ACID**	17	
N-HEPTANOIC ACID		17	
HEPTANOL (ALL ISOMERS) (D)		17	
Heptan-2-one	**METHYL AMYL KETONE**	17	
2-Heptanone	**METHYL AMYL KETONE**	17	
Heptan-2-one	**METHYL AMYL KETONE**	17	
HEPTENE (ALL ISOMERS)		17	
Heptoic acid	**N-HEPTANOIC ACID**	17	
HEPTYL ACETATE		17	
Heptyl alcohol, all isomers	**HEPTANOL (ALL ISOMERS) (D)**	17	
Heptylcarbinol	**OCTANOL (ALL ISOMERS)**	17	
Heptylene, mixed isomers	**HEPTENE (ALL ISOMERS)**	17	
Heptylic acid	**N-HEPTANOIC ACID**	17	
n-Heptylic acid	**N-HEPTANOIC ACID**	17	
1-Hexadecene	**OLEFINS (C13+, ALL ISOMERS)**	17	
Hexadecyl, octadecyl and icosadecyl methacrylates, mixtures	**CETYL/EICOSYL METHACRYLATE MIXTURE**	17	
Hexadecyl and icosyl methacrylate mixture	**CETYL/EICOSYL METHACRYLATE MIXTURE**	17	
1-HEXADECYLNAPHTHALENE / 1,4-BIS(HEXADECYL)NAPHTHALENE MIXTURE		17	
Hexadecylnaphthalene/dihexadecylnaphthalene mixture	**1-HEXADECYLNAPHTHALENE / 1,4-**	17	
Hexadecyl / octadecyl alcohol	**ALCOHOLS (C13+)**	17	
Hexadecyl, octadecyl and icosyl methacrylates, mixtures	**CETYL/EICOSYL METHACRYLATE MIXTURE**	17	
Hexaethylene glycol	**POLYETHYLENE GLYCOL**	17	
Hexahydroaniline	**CYCLOHEXYLAMINE**	17	
Hexahydrobenzene	**CYCLOHEXANE**	17	
Hexahydro-1H-azepine	**HEXAMETHYLENEIMINE**	17	
Hexahydro-l-H-azepine	**HEXAMETHYLENEIMINE**	17	
Hexahydrophenol	**CYCLOHEXANOL**	17	
Hexahydrotoluene	**METHYLCYCLOHEXANE**	17	
Hexamethylene	**CYCLOHEXANE**	17	
HEXAMETHYLENEDIAMINE ADIPATE (50% IN WATER)		17	

Index Name	Product Name	Chapter	UN No.
HEXAMETHYLENEDIAMINE (MOLTEN)		17	
HEXAMETHYLENEDIAMINE SOLUTION		17	1783
1,6-Hexamethylenediamine solution	**HEXAMETHYLENEDIAMINE SOLUTION**	17	
Hexamethylenediammonium adipate solution (50% solution)	**HEXAMETHYLENEDIAMINE ADIPATE (50% IN WATER)**	17	
HEXAMETHYLENE DIISOCYANATE		17	2281
Hexamethylene-1,6-diisocyanate	**HEXAMETHYLENE DIISOCYANATE**	17	
HEXAMETHYLENE GLYCOL		17	
HEXAMETHYLENEIMINE		17	2493
HEXAMETHYLENETETRAMINE SOLUTIONS		18	
Hexamine	**HEXAMETHYLENETETRAMINE SOLUTIONS**	18	
Hexanaphthene	**CYCLOHEXANE**	17	
1,6-Hexandiamine hexanedioate (1:1)	**HEXAMETHYLENEDIAMINE ADIPATE (50% IN WATER)**	17	
HEXANE (ALL ISOMERS)		17	1208
1,6-Hexanediamine	**HEXAMETHYLENEDIAMINE (MOLTEN)**	17	
Hexane-1,6-diamine solutions	**HEXAMETHYLENEDIAMINE SOLUTION**	17	
1,6-Hexanediamine solutions	**HEXAMETHYLENEDIAMINE SOLUTION**	17	
Hexanedioic acid, bis(2-ethylhexyl) ester	**DI-(2-ETHYLHEXYL) ADIPATE**	17	
Hexane-1,6-diol	**HEXAMETHYLENE GLYCOL**	17	
1,6-Hexanediol	**HEXAMETHYLENE GLYCOL**	17	
1,6-HEXANEDIOL, DISTILLATION OVERHEADS		17	1987
n-Hexane	**HEXANE (ALL ISOMERS)**	17	
HEXANOIC ACID		17	
HEXANOL		17	2282
Hexan-1-ol	**HEXANOL**	17	
Hexan-6-olide	**EPSILON-CAPROLACTAM (MOLTEN OR AQUEOUS**	17	
Hexan-2-one	**METHYL BUTYL KETONE**	17	
2-Hexanone	**METHYL BUTYL KETONE**	17	
HEXENE (ALL ISOMERS)		17	2370
Hexene-1	**HEXENE (ALL ISOMERS)**	17	
Hex-1-ene	**HEXENE (ALL ISOMERS)**	17	
2-Hexene	**HEXENE (ALL ISOMERS)**	17	
Hexone	**METHYL ISOBUTYL KETONE**	17	
HEXYL ACETATE		17	1233
sec-Hexyl acetate	**METHYLAMYL ACETATE**	17	
Hexyl alcohol	**HEXANOL**	17	
Hexyldimethylamine	**ALKYL (C12+) DIMETHYLAMINE**	17	
Hexylene	**HEXENE (ALL ISOMERS)**	17	
HEXYLENE GLYCOL		18	
Hexyl ethanoate	**HEXYL ACETATE**	17	
Homopiperidine	**HEXAMETHYLENEIMINE**	17	
2H-Tetrahydro-1,4-oxazine	**MORPHOLINE**	17	
HYDROCHLORIC ACID		17	1789
Hydrofuran	**TETRAHYDROFURAN**	17	
Hydrogenated glucose syrup	**MALTITOL SOLUTION**	18	
Hydrogenated maltose syrup	**MALTITOL SOLUTION**	18	
Hydrogenated oligosaccharide	**HYDROGENATED STARCH HYDROLYSATE**	18	
HYDROGENATED STARCH HYDROLYSATE		18	
Hydrogencarboxylic acid	**FORMIC ACID**	17	
Hydrogen chloride, aqueous	**HYDROCHLORIC ACID**	17	

Index Name	Product Name	Chapter	UN No.
HYDROGEN PEROXIDE SOLUTIONS (OVER 60% BUT NOT OVER 70% BY MASS)		17	2015
HYDROGEN PEROXIDE SOLUTIONS (OVER 8% BUT NOT OVER 60% BY MASS)		17	2014, 298
Hydrogen sulphate	**SULPHURIC ACID**	17	
alpha-Hydro-omega-hydroxypoly[oxy(methyl-1,2-ethanediyl)]	**POLYPROPYLENE GLYCOL**	17	
Hydroxyacetic acid	**GLYCOLIC ACID SOLUTION (70% OR LESS)**	17	
Hydroxybenzene	**PHENOL**	17	
4-Hydroxybutanoic acid lactone	**GAMMA-BUTYROLACTONE**	17	
4-Hydroxybutyric acid lactone	**GAMMA-BUTYROLACTONE**	17	
gamma-Hydroxybutyric acid lactone	**GAMMA-BUTYROLACTONE**	17	
Hydroxydimethylbenzenes	**XYLENOL**	17	
Hydroxyethanoic acid	**GLYCOLIC ACID SOLUTION (70% OR LESS)**	17	
2-Hydroxyethyl acetate	**ETHYLENE GLYCOL ACETATE**	17	
2-HYDROXYETHYL ACRYLATE		17	
beta-Hydroxyethyl acrylate	**2-HYDROXYETHYL ACRYLATE**	17	
2-Hydroxyethylamine	**ETHANOLAMINE**	17	
N-beta-Hydroxyethylethylenediamine	**AMINOETHYL ETHANOLAMINE**	17	
N-(HYDROXYETHYL)ETHYLENEDIAMINETRIACETIC ACID, TRISODIUM SALT SOLUTION		17	
beta-Hydroxyethyl phenyl ether	**ETHYLENE GLYCOL PHENYL ETHER**	17	
2-Hydroxyethyl propenoate	**2-HYDROXYETHYL ACRYLATE**	17	
2-Hydroxyethyl 2-propenoate	**2-HYDROXYETHYL ACRYLATE**	17	
alpha-Hydroxyisobutyronitrile	**ACETONE CYANOHYDRIN**	17	
4-Hydroxy-2-keto-4-methylpentane	**DIACETONE ALCOHOL**	17	
4-Hydroxy-4-methylpentanone-2	**DIACETONE ALCOHOL**	17	
4-Hydroxy-4-methylpentan-2-one	**DIACETONE ALCOHOL**	17	
2-(Hydroxymethyl)propane	**ISOBUTYL ALCOHOL**	17	
2-Hydroxy-2-methylpropiononitrile	**ACETONE CYANOHYDRIN**	17	
2-HYDROXY-4-(METHYLTHIO)BUTANOIC ACID		17	
2-Hydroxy-4-methylthiobutyric acid	**2-HYDROXY-4-(METHYLTHIO)BUTANOIC ACID**	17	
2-Hydroxynitrobenzene (molten)	**O-NITROPHENOL (MOLTEN)**	17	
1-Hydroxy-2-phenoxyethane	**ETHYLENE GLYCOL PHENYL ETHER**	17	
2-Hydroxypropanoic acid	**LACTIC ACID**	17	
2-Hydroxypropionic acid	**LACTIC ACID**	17	
alpha-Hydroxypropionic acid	**LACTIC ACID**	17	
3-Hydroxypropionic acid, lactone.	**BETA-PROPIOLACTONE**	17	
2-Hydroxypropionitrile	**LACTONITRILE SOLUTION (80% OR LESS)**	17	
alpha-Hydroxypropionitrile	**LACTONITRILE SOLUTION (80% OR LESS)**	17	
beta-Hydroxypropionitrile	**ETHYLENE CYANOHYDRIN**	17	
2-Hydroxypropiononitrile	**LACTONITRILE SOLUTION (80% OR LESS)**	17	
3-Hydroxypropiononitrile	**ETHYLENE CYANOHYDRIN**	17	
2-[2-(2-hydroxypropoxy)propoxy]propan-1-ol	**TRIPROPYLENE GLYCOL**	17	
2-Hydroxypropylamine	**ISOPROPANOLAMINE**	17	
3-Hydroxypropylamine	**N-PROPANOLAMINE**	17	
alpha-Hydroxytoluene	**BENZYL ALCOHOL**	17	
3-Hydroxy-2,2,4-trimethylpentylisobutyrate	**2,2,4-TRIMETHYL-1,3-PENTANEDIOL-1-ISOBUTYRATE**	17	
ILLIPE OIL		17	
2,2'-[Iminobis(ethyleneimino)]diethylamine	**TETRAETHYLENE PENTAMINE**	17	
2,2'-Iminodi(ethylamine)	**DIETHYLENETRIAMINE**	17	
2,2'-Iminodiethanol	**DIETHANOLAMINE**	17	

Index Name	Product Name	Chapter	UN No.
1,1'-Iminodipropan-2-ol	**DIISOPROPANOLAMINE**	17	
Iron (III) chloride solutions	**FERRIC CHLORIDE SOLUTIONS**	17	
Iron (III) nitrate / nitric acid solution	**FERRIC NITRATE/NITRIC ACID SOLUTION**	17	
Isoacetophenone	**ISOPHORONE**	17	
Isoamyl acetate	**AMYL ACETATE (ALL ISOMERS)**	17	
ISOAMYL ALCOHOL		17	
Isobutaldehyde	**BUTYRALDEHYDE (ALL ISOMERS)**	17	
Isobutanal	**BUTYRALDEHYDE (ALL ISOMERS)**	17	
Isobutanol	**ISOBUTYL ALCOHOL**	17	
Isobutanolamine	**2-AMINO-2-METHYL-1-PROPANOL**	17	
Isobutyl acetate	**BUTYL ACETATE (ALL ISOMERS)**	17	
Isobutyl acrylate	**BUTYL ACRYLATE (ALL ISOMERS)**	17	
ISOBUTYL ALCOHOL		17	1212
Isobutyl aldehyde	**BUTYRALDEHYDE (ALL ISOMERS)**	17	
Isobutylamine	**BUTYLAMINE (ALL ISOMERS)**	17	
Isobutylcarbinol	**ISOAMYL ALCOHOL**	17	
ISOBUTYL FORMATE		17	2393
Isobutyl ketone	**DIISOBUTYL KETONE**	17	
ISOBUTYL METHACRYLATE		17	
Isobutylmethylcarbinol	**METHYLAMYL ALCOHOL**	17	
Isobutyl methyl ketone	**METHYL ISOBUTYL KETONE**	17	
Isobutylmethylmethanol	**METHYLAMYL ALCOHOL**	17	
Isobutyraldehyde	**BUTYRALDEHYDE (ALL ISOMERS)**	17	
Isobutyric aldehyde	**BUTYRALDEHYDE (ALL ISOMERS)**	17	
alpha-isocyanatobenzyl-omega-isocyanatophenyl= (continued)	**POLYMETHYLENE POLYPHENYL ISOCYANATE**	17	
1-Isocyanato-3-isocyanatomethyl-trimethylcyclohexane	**ISOPHORONE DIISOCYANATE**	17	
3-Isocyanatomethyl-3,5,5-trimethylcyclohexyl isocyanate	**ISOPHORONE DIISOCYANATE**	17	
Isodecanol	**DECYL ALCOHOL (ALL ISOMERS)**	17	
Isodecyl alcohol	**DECYL ALCOHOL (ALL ISOMERS)**	17	
Isododecane	**DODECANE (ALL ISOMERS)**	17	
Isodurene	**TETRAMETHYLBENZENE (ALL ISOMERS)**	17	
Isononanoic acid	**NONANOIC ACID (ALL ISOMERS)**	17	
Isononanol	**NONYL ALCOHOL (ALL ISOMERS)**	17	
Isooctane	**OCTANE (ALL ISOMERS)**	17	
Isooctanol	**OCTANOL (ALL ISOMERS)**	17	
Isopentane	**PENTANE (ALL ISOMERS)**	17	
Isopentanol	**AMYL ALCOHOL, PRIMARY**	17	
Isopentanol	**ISOAMYL ALCOHOL**	17	
Isopentene	**PENTENE (ALL ISOMERS)**	17	
Isopentyl acetate	**AMYL ACETATE (ALL ISOMERS)**	17	
Isopentyl alcohol	**ISOAMYL ALCOHOL**	17	
ISOPHORONE		17	
ISOPHORONEDIAMINE		17	2289
ISOPHORONE DIISOCYANATE		17	2290
ISOPRENE		17	1218
Isopropanol	**ISOPROPYL ALCOHOL**	18	
ISOPROPANOLAMINE		17	
Isopropenylbenzene	**ALPHA-METHYLSTYRENE**	17	
2-Isopropoxyethanol	**ETHYLENE GLYCOL MONOALKYL ETHERS**	17	
2-Isopropoxypropane	**ISOPROPYL ETHER**	17	
ISOPROPYL ACETATE		17	1220

Index Name	Product Name	Chapter	UN No.
Isopropylacetone	**METHYL ISOBUTYL KETONE**	17	
ISOPROPYL ALCOHOL		18	
ISOPROPYLAMINE		17	1221
ISOPROPYLAMINE (70% OR LESS) SOLUTION		17	
Isopropylammonium N-(phosphonomethyl)glycine	**GLYPHOSATE SOLUTION (NOT CONTAINING SURFACTANT)**	17	
Isopropyl carbinol	**ISOBUTYL ALCOHOL**	17	
Isopropylcarbinol	**ISOBUTYL ALCOHOL**	17	
ISOPROPYLCYCLOHEXANE		17	
1-Isopropyl-3,3-dimethyltrimethylene diisocyanate	**2,2,4-TRIMETHYL-1,3-PENTANEDIOL DIISOBUTYRATE**	17	
ISOPROPYL ETHER		17	1159
Isopropylideneacetone	**MESITYL OXIDE**	17	
Isopropyl oxide	**ISOPROPYL ETHER**	17	
Isopropyltoluene	**P-CYMENE**	17	
4-Isopropyltoluene	**P-CYMENE**	17	
4-Isopropyltoluol	**P-CYMENE**	17	
Isovaleral	**VALERALDEHYDE (ALL ISOMERS)**	17	
Isovaleraldehyde	**VALERALDEHYDE (ALL ISOMERS)**	17	
Isovaleraldehyde	**VALERALDEHYDE (ALL ISOMERS)**	17	
Isovaleric aldehyde	**VALERALDEHYDE (ALL ISOMERS)**	17	
Isovalerone	**DIISOBUTYL KETONE**	17	
Kaolin clay slurry	**KAOLIN SLURRY**	18	
Kaolinite slurry	**KAOLIN SLURRY**	18	
KAOLIN SLURRY		18	
Ketohexamethylene	**CYCLOHEXANONE**	17	
Ketone propane	**ACETONE**	18	
Ketopropane	**ACETONE**	18	
LACTIC ACID		17	
LACTONITRILE SOLUTION (80% OR LESS)		17	
LARD		17	
LATEX, AMMONIA (1% OR LESS), INHIBITED		17	
LATEX: CARBOXYLATED STYRENE-BUTADIENE COPOLYMER; STYRENE-BUTADIENE RUBBER		17	
LAURIC ACID		17	
Lauryl alcohol	**DODECYL ALCOHOL**	17	
Lauryl mercaptan	**TERT-DODECANETHIOL**	17	
Lauryl methacrylate	**DODECYL METHACRYLATE**	17	
Lead alkyls, n.o.s.	**MOTOR FUEL ANTI-KNOCK COMPOUNDS (CONTAINING**	17	
Lead tetraethyl	**MOTOR FUEL ANTI-KNOCK COMPOUNDS (CONTAINING**	17	
Lead tetramethyl	**MOTOR FUEL ANTI-KNOCK COMPOUNDS (CONTAINING**	17	
LECITHIN		18	
LIGNINSULPHONIC ACID, SODIUM SALT SOLUTION		17	3806
Limonene	**DIPENTENE**	17	
Linear alkylbenzene (LAB) bottoms	**ALKYL BENZENE DISTILLATION BOTTOMS**	17	
LINSEED OIL		17	
LIQUID CHEMICAL WASTES		17	
LONG-CHAIN ALKARYL POLYETHER (C11-C20)		17	
LONG-CHAIN ALKARYL SULPHONIC ACID (C16-C60)		17	
LONG-CHAIN ALKYLPHENATE/PHENOL SULPHIDE MIXTURE		17	

Index Name	Product Name	Chapter	UN No.
Lye	**SODIUM HYDROXIDE SOLUTION**	17	
Lye, potash	**POTASSIUM HYDROXIDE SOLUTION**	17	
Lye, soda	**SODIUM HYDROXIDE SOLUTION**	17	
Lye solution	**SODIUM HYDROXIDE SOLUTION**	17	
L-LYSINE SOLUTION (60% OR LESS)		17	
Magnesia hydrate	**MAGNESIUM HYDROXIDE SLURRY**	18	
MAGNESIUM CHLORIDE SOLUTION		17	
MAGNESIUM HYDROXIDE SLURRY		18	
MAGNESIUM LONG-CHAIN ALKARYL SULPHONATE (C11-C50)		17	
MAGNESIUM LONG-CHAIN ALKYL SALICYLATE (C11+)		17	
MALEIC ANHYDRIDE		17	2215
Maltitol	**MALTITOL SOLUTION**	18	
MALTITOL SOLUTION		18	
Maltitol syrup	**MALTITOL SOLUTION**	18	
MANGO KERNEL OIL		17	
Meglumine	**N-METHYLGLUCAMINE SOLUTION (70% OR LESS)**	18	
MERCAPTOBENZOTHIAZOL, SODIUM SALT SOLUTION		17	
Mesitylene	**TRIMETHYLBENZENE (ALL ISOMERS)**	17	
MESITYL OXIDE		17	1229
Metaformaldehyde	**1,3,5-TRIOXANE**	17	
Metam-sodium	**METAM SODIUM SOLUTION**	17	
METAM SODIUM SOLUTION		17	
METHACRYCLIC ACID - ALKOXYPOLY (ALKYLENE OXIDE) METHACRYLATE COPOLYMER, SODIUM SALT AQUEOUS SOLUTION (45% OR LESS)		17	
METHACRYLIC ACID		17	2531
alpha-Methacrylic acid	**METHACRYLIC ACID**	17	
Methacrylic acid, dodecyl ester	**DODECYL METHACRYLATE**	17	
Methacrylic acid, lauryl ester	**DODECYL METHACRYLATE**	17	
METHACRYLIC RESIN IN ETHYLENE DICHLORIDE		17	
METHACRYLONITRILE		17	3079
Methanal	**FORMALDEHYDE SOLUTIONS (45% OR LESS)**	17	
Methanamide	**FORMAMIDE**	17	
Methanamine	**METHYLAMINE SOLUTIONS (42% OR LESS)**	17	
Methane carboxylic acid	**ACETIC ACID**	17	
Methanecarboxylic acid	**ACETIC ACID**	17	
Methanoic acid	**FORMIC ACID**	17	
Methanol	**METHYL ALCOHOL**	17	
Methenamine	**HEXAMETHYLENETETRAMINE SOLUTIONS**	18	
3-METHOXY-1-BUTANOL		17	
3-Methoxybutan-1-ol	**3-METHOXY-1-BUTANOL**	17	
3-METHOXYBUTYL ACETATE		17	
2-Methoxyethanol	**ETHYLENE GLYCOL MONOALKYL ETHERS**	17	
2-(2-Methoxyethoxy)ethanol	**POLY(2-8)ALKYLENE GLYCOL MONOALKYL(C1-C6) ETHER**	17	
2-[2-(2-Methoxyethoxy)ethoxy]ethanol	**POLY(2-8)ALKYLENE GLYCOL MONOALKYL(C1-C6) ETHER**	17	
2-(2-Methoxyethoxy)ethyl acetate	**POLY(2-8)ALKYLENE GLYCOL MONOALKYL (C1-C6) ETHER**	17	
2-Methoxyethyl acetate	**ETHYLENE GLYCOL METHYL ETHER ACETATE**	17	
2-Methoxy-2-methyl butane	**TERT-AMYL METHYL ETHER**	17	
3-Methoxy-3-methylbutan-1-ol	**3-METHYL-3-METHOXYBUTANOL**	17	
3-Methoxy-3-methylbutyl alcohol	**3-METHYL-3-METHOXYBUTANOL**	17	

Index Name	Product Name	Chapter	UN No.
2-Methoxy-1-methylethyl acetate	**PROPYLENE GLYCOL METHYL ETHER ACETATE**	17	
N-(2-METHOXY-1-METHYL ETHYL)-2-ETHYL-6-METHYL CHLOROACETANILIDE		17	
2-methoxy-2-methylpropane	**METHYL TERT-BUTYL ETHER**	17	
1-Methoxypropan-2-ol	**PROPYLENE GLYCOL MONOALKYL ETHER**	17	
1-Methoxy-2-propanol acetate	**PROPYLENE GLYCOL METHYL ETHER ACETATE**	17	
1-(2-Methoxypropoxy)propan-2-ol	**POLY(2-8)ALKYLENE GLYCOL MONOALKYL(C1-C6) ETHER**	17	
3-[3-(3-Methoxypropoxy)propoxy]propan-1-ol	**POLY(2-8)ALKYLENE GLYCOL MONOALKYL(C1-C6) ETHER**	17	
Methoxytriglycol	**POLY(2-8)ALKYLENE GLYCOL MONOALKYL(C1-C6) ETHER**	17	
Methylacetaldehyde	**PROPIONALDEHYDE**	17	
METHYL ACETATE		17	
Methylacetic acid	**PROPIONIC ACID**	17	
METHYL ACETOACETATE		17	
Methyl acetylacetate	**METHYL ACETOACETATE**	17	
beta-Methylacrolein	**CROTONALDEHYDE**	17	
METHYL ACRYLATE		17	1919
2-Methylacrylic acid	**METHACRYLIC ACID**	17	
2-Methylacrylic acid, dodecyl ester	**DODECYL METHACRYLATE**	17	
2-Methylacrylic acid, lauryl ester	**DODECYL METHACRYLATE**	17	
METHYL ALCOHOL		17	
METHYLAMINE SOLUTIONS (42% OR LESS)		17	1235
1-Methyl-2-aminobenzene	**O-TOLUIDINE**	17	
2-Methyl-1-aminobenzene	**O-TOLUIDINE**	17	
METHYLAMYL ACETATE		17	1233
METHYLAMYL ALCOHOL		17	2053
METHYL AMYL KETONE		17	1110
Methyl n-amyl ketone	**METHYL AMYL KETONE**	17	
2-Methylaniline	**O-TOLUIDINE**	17	
3-Methylaniline	**O-TOLUIDINE**	17	
o-Methylaniline	**O-TOLUIDINE**	17	
2-Methylbenzenamine	**O-TOLUIDINE**	17	
3-Methylbenzenamine	**O-TOLUIDINE**	17	
o-Methylbenzenamine	**O-TOLUIDINE**	17	
Methylbenzene	**TOLUENE**	17	
Methylbenzenediamine	**TOLUENEDIAMINE**	17	
Methylbenzol	**TOLUENE**	17	
2-Methyl-1,3-butadiene	**ISOPRENE**	17	
3-Methyl-1,3-butadiene	**ISOPRENE**	17	
2-Methylbutanal	**VALERALDEHYDE (ALL ISOMERS)**	17	
3-Methylbutanal	**VALERALDEHYDE (ALL ISOMERS)**	17	
1-Methylbutane	**PENTANE (ALL ISOMERS)**	17	
2-Methylbutane	**PENTANE (ALL ISOMERS)**	17	
Methyl butanoate	**METHYL BUTYRATE**	17	
2-Methyl-2-butanol	**TERT-AMYL ALCOHOL**	17	
2-Methylbutan-2-ol	**TERT-AMYL ALCOHOL**	17	
2-Methyl-4-butanol	**ISOAMYL ALCOHOL**	17	
3-Methyl-1-butanol	**AMYL ALCOHOL, PRIMARY**	17	
3-Methyl-1-butanol	**ISOAMYL ALCOHOL**	17	
3-Methylbutan-1-ol	**AMYL ALCOHOL, PRIMARY**	17	
3-Methylbutan-1-ol	**ISOAMYL ALCOHOL**	17	
3-Methylbutan-3-ol	**TERT-AMYL ALCOHOL**	17	
3-Methylbut-1-ene	**PENTENE (ALL ISOMERS)**	17	

Index Name	Product Name	Chapter	UN No.
Methylbutenes	**PENTENE (ALL ISOMERS)**	17	
METHYLBUTENOL		17	
1-Methylbutyl acetate	**AMYL ACETATE (ALL ISOMERS)**	17	
2-Methyl-2-butyl alcohol	**TERT-AMYL ALCOHOL**	17	
2-Methyl-4-butyl alcohol	**ISOAMYL ALCOHOL**	17	
3-Methyl-1-butyl alcohol	**ISOAMYL ALCOHOL**	17	
3-Methyl-3-butyl alcohol	**TERT-AMYL ALCOHOL**	17	
METHYL TERT-BUTYL ETHER		17	
METHYL BUTYL KETONE		17	1224
METHYLBUTYNOL		17	
2-Methyl-3-butyn-2-ol	**2-METHYL-2-HYDROXY-3-BUTYNE**	17	
2-Methyl-3-butyn-2-ol	**METHYLBUTYNOL**	17	
2-Methylbut-3-yn-2-ol	**2-METHYL-2-HYDROXY-3-BUTYNE**	17	
2-Methylbut-3-yn-2-ol	**METHYLBUTYNOL**	17	
2-Methylbutyraldehyde	**VALERALDEHYDE (ALL ISOMERS)**	17	
3-Methylbutyraldehyde	**VALERALDEHYDE (ALL ISOMERS)**	17	
METHYL BUTYRATE		17	1237
2-beta-Methyl 'carbitol'	**POLY(2-8)ALKYLENE GLYCOL MONOALKYL(C1-C6) ETHER**	17	
Methyl 'carbitol' acetate	**POLY(2-8)ALKYLENE GLYCOL MONOALKYL (C1-C6) ETHER**	17	
Methyl 'cellosolve'	**ETHYLENE GLYCOL MONOALKYL ETHERS**	17	
Methyl 'cellosolve' acetate	**ETHYLENE GLYCOL METHYL ETHER ACETATE**	17	
Methylchloroform	**1,1,1-TRICHLOROETHANE**	17	
Methyl cyanide	**ACETONITRILE**	17	
METHYLCYCLOHEXANE		17	2296
METHYLCYCLOPENTADIENE DIMER		17	
Methyl-1,3-cyclopentadiene dimer	**METHYLCYCLOPENTADIENE DIMER**	17	
METHYLCYCLOPENTADIENYL MANGANESE TRICARBONYL		17	3281
METHYL DIETHANOLAMINE		17	
4-Methyl-1,3-dioxolan-2-one	**PROPYLENE CARBONATE**	18	
Methyl disulphide	**DIMETHYL DISULPHIDE**	17	
Methylenebis(4-cyanatobenzene)	**DIPHENYLMETHANE DIISOCYANATE**	17	
Methylenebis(phenyl isocyanate)	**DIPHENYLMETHANE DIISOCYANATE**	17	
Methylenebis(phenylene isocyanate)	**DIPHENYLMETHANE DIISOCYANATE**	17	
Methylenebis(p-phenylene isocyanate)	**DIPHENYLMETHANE DIISOCYANATE**	17	
4,4'-Methylenebis(phenyl isocyanate)	**DIPHENYLMETHANE DIISOCYANATE**	17	
S.S'-Methylenebis[N-dialkyl(C4-C8)dithiocarbamate]	**ALKYL DITHIOCARBAMATE (C19-C35)**	17	
Methylene bromide	**DIBROMOMETHANE**	17	
Methylene chloride	**DICHLOROMETHANE**	17	
Methylene dichloride	**DICHLOROMETHANE**	17	
4,4'-Methylenediphenyl diisocyanate	**DIPHENYLMETHANE DIISOCYANATE**	17	
Methylenedi-p-phenylene diisocyanate	**DIPHENYLMETHANE DIISOCYANATE**	17	
4,4'-Methylenediphenyl isocyanate	**DIPHENYLMETHANE DIISOCYANATE**	17	
2-Methylenepropionic acid	**METHACRYLIC ACID**	17	
Methyl ethanoate	**METHYL ACETATE**	17	
1-Methylethyl acetate	**ISOPROPYL ACETATE**	17	
1-Methylethylamine	**ISOPROPYLAMINE**	17	
2-METHYL-6-ETHYL ANILINE		17	
1,4-methyl ethyl benzene	**ETHYL TOLUENE**	17	
Methylethylcarbinol	**SEC-BUTYL ALCOHOL**	18	
Methyl ethylene glycol	**PROPYLENE GLYCOL**	18	
Methylethylene glycol	**PROPYLENE GLYCOL**	18	

Index Name	Product Name	Chapter	UN No.
Methylethylene oxide	**PROPYLENE OXIDE**	17	
METHYL ETHYL KETONE		17	
N-(1-Methylethyl)propan-2-amine	**DIISOPROPYLAMINE**	17	
2-METHYL-5-ETHYL PYRIDINE		17	2300
METHYL FORMATE		17	1243
N-methyl-D-glucamine	**N-METHYLGLUCAMINE SOLUTION (70% OR LESS)**	18	
N-METHYLGLUCAMINE SOLUTION (70% OR LESS)		18	
Methyl glycol	**PROPYLENE GLYCOL**	18	
5-Methyl-3-heptanone	**ETHYL AMYL KETONE**	17	
5-Methylheptan-3-one	**ETHYL AMYL KETONE**	17	
5-Methylhexan-2-one	**METHYL AMYL KETONE**	17	
Methylhexylcarbinol	**OCTANOL (ALL ISOMERS)**	17	
Methyl 2-hydroxybenzoate	**METHYL SALICYLATE**	17	
Methyl o-hydroxybenzoate	**METHYL SALICYLATE**	17	
2-METHYL-2-HYDROXY-3-BUTYNE		17	
2-Methyl-2-hydroxy-3-butyne	**METHYLBUTYNOL**	17	
2,2'-(Methylimino)diethanol	**METHYL DIETHANOLAMINE**	17	
N-Methyl-2,2'-iminodiethanol	**METHYL DIETHANOLAMINE**	17	
Methyl isoamyl ketone	**METHYL AMYL KETONE**	17	
Methyl isobutenyl ketone	**MESITYL OXIDE**	17	
Methylisobutylcarbinol	**METHYLAMYL ALCOHOL**	17	
Methylisobutylcarbinol acetate	**METHYLAMYL ACETATE**	17	
METHYL ISOBUTYL KETONE		17	
2-Methyllactonitrile	**ACETONE CYANOHYDRIN**	17	
methyl mercaptopropionaldehyde	**3-(METHYLTHIO)PROPIONALDEHYDE**	17	
METHYL METHACRYLATE		17	1247
Methyl methanoate	**METHYL FORMATE**	17	
3-METHYL-3-METHOXYBUTANOL		17	
Methyl alpha-methylacrylate	**METHYL METHACRYLATE**	17	
7-Methyl-3-methylene-1,6-octadiene	**MYRCENE**	17	
Methyl 2-methylprop-2-enoate	**METHYL METHACRYLATE**	17	
METHYL NAPHTHALENE (MOLTEN)		17	
alpha-Methylnaphthalene	**METHYL NAPHTHALENE (MOLTEN)**	17	
beta-Methylnaphthalene	**METHYL NAPHTHALENE (MOLTEN)**	17	
(o- and p-) Methylnitrobenzene	**O- OR P-NITROTOLUENES**	17	
8-Methylnonan-1-ol	**DECYL ALCOHOL (ALL ISOMERS)**	17	
Methylolpropane	**N-BUTYL ALCOHOL**	18	
alpha-Methyl-omega-methoxypoly(ethylene oxide)	**POLYETHYLENE GLYCOL DIMETHYL ETHER**	17	
alpha-Methyl-omega-methoxypoly(oxy-1,2-ethanediyl)	**POLYETHYLENE GLYCOL DIMETHYL ETHER**	17	
alpha-Methyl-omega-methoxypoly(oxyethylene)	**POLYETHYLENE GLYCOL DIMETHYL ETHER**	17	
Methyloxirane	**PROPYLENE OXIDE**	17	
2-Methyl-2,4-pentanediol	**HEXYLENE GLYCOL**	18	
2-Methylpentane-2,4-diol	**HEXYLENE GLYCOL**	18	
Methylpentan-2-ol	**METHYLAMYL ALCOHOL**	17	
4-Methylpentanol-2	**METHYLAMYL ALCOHOL**	17	
4-Methylpentan-2-ol	**METHYLAMYL ALCOHOL**	17	
4-Methyl-2-pentanol acetate	**METHYLAMYL ACETATE**	17	
4-Methyl-2-pentanone	**METHYL ISOBUTYL KETONE**	17	
4-Methylpentan-2-one	**METHYL ISOBUTYL KETONE**	17	
2-Methylpentene	**HEXENE (ALL ISOMERS)**	17	
2-Methyl-1-pentene	**HEXENE (ALL ISOMERS)**	17	

Index Name	Product Name	Chapter	UN No.
2-Methylpent-1-ene	**HEXENE (ALL ISOMERS)**	17	
4-Methyl-1-pentene	**HEXENE (ALL ISOMERS)**	17	
4-Methyl-3-penten-2-one	**MESITYL OXIDE**	17	
4-Methylpent-3-en-2-one	**MESITYL OXIDE**	17	
4-Methyl-2-pentyl acetate	**METHYLAMYL ACETATE**	17	
Methylpentyl acetates	**METHYLAMYL ACETATE**	17	
Methyl tert-pentyl ether	**TERT-AMYL METHYL ETHER**	17	
Methyl pentyl ketone	**METHYL AMYL KETONE**	17	
Methylphenylenediamine	**TOLUENEDIAMINE**	17	
2-Methyl-m-phenylenediamine	**TOLUENEDIAMINE**	17	
4-Methyl-m-phenylenediamine	**TOLUENEDIAMINE**	17	
Methylphenylene diisocyanate	**TOLUENE DIISOCYANATE**	17	
4-methyl-1,3-phenylene diisocyanate	**TOLUENE DIISOCYANATE**	17	
4-Methyl-m-phenylene diisocyanate	**TOLUENE DIISOCYANATE**	17	
2-Methyl-2-phenylpropane	**BUTYLBENZENE (ALL ISOMERS)**	17	
2-Methylpropanal	**BUTYRALDEHYDE (ALL ISOMERS)**	17	
2-METHYL-1,3-PROPANEDIOL		17	
2-Methyl-1-propanol	**ISOBUTYL ALCOHOL**	17	
2-Methylpropan-1-ol	**ISOBUTYL ALCOHOL**	17	
2-Methyl-2-propanol	**TERT-BUTYL ALCOHOL**	17	
2-Methylpropan-2-ol	**TERT-BUTYL ALCOHOL**	17	
2-Methylprop-2-enenitrile	**METHACRYLONITRILE**	17	
2-Methylpropenoic acid	**METHACRYLIC ACID**	17	
alpha-Methylpropenoic acid	**METHACRYLIC ACID**	17	
2-Methylprop-1-enyl methyl ketone	**MESITYL OXIDE**	17	
2-Methylpropyl acrylate	**BUTYL ACRYLATE (ALL ISOMERS)**	17	
2-Methyl-1-propyl alcohol	**ISOBUTYL ALCOHOL**	17	
2-Methyl-2-propyl alcohol	**TERT-BUTYL ALCOHOL**	17	
Methylpropylbenzene	**P-CYMENE**	17	
Methylpropylcarbinol	**SEC-AMYL ALCOHOL**	17	
1-Methyl-1-propylethylene	**HEXENE (ALL ISOMERS)**	17	
2-Methylpropyl formate	**ISOBUTYL FORMATE**	17	
METHYL PROPYL KETONE		18	1249
2-METHYLPYRIDINE		17	2313
3-METHYLPYRIDINE		17	2313
4-METHYLPYRIDINE		17	2313
alpha-Methylpyridine	**2-METHYLPYRIDINE**	17	
1-Methyl-2-pyrrolidinone	**N-METHYL-2-PYRROLIDONE**	17	
1-Methylpyrrolidin-2-one	**N-METHYL-2-PYRROLIDONE**	17	
N-Methylpyrrolidinone	**N-METHYL-2-PYRROLIDONE**	17	
1-Methyl-2-pyrrolidone	**N-METHYL-2-PYRROLIDONE**	17	
N-METHYL-2-PYRROLIDONE		17	
METHYL SALICYLATE		17	
Methylstyrene	**VINYLTOLUENE**	17	
ALPHA-METHYLSTYRENE		17	2303
3-(METHYLTHIO)PROPIONALDEHYDE		17	
2-Methyltrimethylene glycol	**2-METHYL-1,3-PROPANEDIOL**	17	
Metolachlor	**N-(2-METHOXY-1-METHYL ETHYL)-2-ETHYL-6-METHYL**	17	
Middle oil	**CARBOLIC OIL**	17	
Milk acid	**LACTIC ACID**	17	
Milk of magnesia	**MAGNESIUM HYDROXIDE SLURRY**	18	
Mineral jelly	**PETROLATUM**	17	
Mineral wax	**PETROLATUM**	17	

Index Name	Product Name	Chapter	UN No.
Mixed aliphatic oxygenated hydrocarbons, primary aliphatic alcohols and aliphatic ethers: mol wt: >200	**OXYGENATED ALIPHATIC HYDROCARBON MIXTURE**	17	
MOLASSES		18	
Molybdenum Polysulfide Long Chain Alkyl Dithiocarbamide Complex.	**MOLYBDENUM POLYSULFIDE LONG CHAIN ALKYL**	17	
MOLYBDENUM POLYSULFIDE LONG CHAIN ALKYL DITHIOCARBAMIDE COMPLEX.		17	
Monochlorobenzene	**CHLOROBENZENE**	17	
Monochlorobenzol	**CHLOROBENZENE**	17	
Monoethanolamine	**ETHANOLAMINE**	17	
Monoethylamine	**ETHYLAMINE**	17	
Monoethylamine solutions, 72% or less	**ETHYLAMINE SOLUTIONS (72% OR LESS)**	17	
Monoisopropanolamine	**ISOPROPANOLAMINE**	17	
Monoisopropylamine	**ISOPROPYLAMINE**	17	
Monomethylamine	**METHYLAMINE SOLUTIONS (42% OR LESS)**	17	
Monomethylamine solutions, 42% or less	**METHYLAMINE SOLUTIONS (42% OR LESS)**	17	
Monopropylamine	**N-PROPYLAMINE**	17	
Monopropylene glycol	**PROPYLENE GLYCOL**	18	
MORPHOLINE		17	2054
MOTOR FUEL ANTI-KNOCK COMPOUNDS (CONTAINING LEAD ALKYLS)		17	1649
Muriatic acid	**HYDROCHLORIC ACID**	17	
MYRCENE		17	
Naphtha (petroleum), Light Steam-cracked Aromatics	**ALKYLBENZENE MIXTURES (CONTAINING AT LEAST 50%**	17	
Naphtha, coal tar	**COAL TAR NAPHTHA SOLVENT**	17	
NAPHTHALENE (MOLTEN)		17	2304
NAPHTHALENESULPHONIC ACID-FORMALDEHYDE COPOLYMER, SODIUM SALT SOLUTION		17	
Naphtha safety solvent	**WHITE SPIRIT, LOW (15-20%) AROMATIC**	17	
NEODECANOIC ACID		17	
Neodecanoic acid, 2,3-epoxypropyl ester	**GLYCIDYL ESTER OF C10 TRIALKYLACETIC ACID**	17	
Neodecanoic acid, glycidyl ester	**GLYCIDYL ESTER OF C10 TRIALKYLACETIC ACID**	17	
Neodecanoic acid vinyl ester	**VINYL NEODECANOATE**	17	
Neopentane	**PENTANE (ALL ISOMERS)**	17	
Neopentanoic acid	**TRIMETHYLACETIC ACID**	17	
Neopentylene glycol	**2,2-DIMETHYLPROPANE-1,3-DIOL (MOLTEN OR SOLUTION)**	17	
NITRATING ACID (MIXTURE OF SULPHURIC AND NITRIC ACIDS)		17	1796
NITRIC ACID (70% AND OVER)		17	2031, 203
NITRIC ACID (LESS THAN 70%)		17	2031
Nitric acid, fuming	**NITRIC ACID (70% AND OVER)**	17	
Nitric acid, red fuming	**NITRIC ACID (70% AND OVER)**	17	
NITRILOTRIACETIC ACID, TRISODIUM SALT SOLUTION		17	
2,2',2"-Nitrilotriethanol	**TRIETHANOLAMINE**	17	
Nitrilo-2,2',2"-triethanol	**TRIETHANOLAMINE**	17	
2,2',2"-Nitrilotriethanol	**TRIETHANOLAMINE**	17	
1,1',1"-Nitrilotripropan-2-ol	**TRIISOPROPANOLAMINE**	17	
1,1',1"-Nitrilotri-2-propanol	**TRIISOPROPANOLAMINE**	17	
1,1',1"-Nitrilotripropan-2-ol	**TRIISOPROPANOLAMINE**	17	
NITROBENZENE		17	1662
Nitrobenzol	**NITROBENZENE**	17	

Index Name	Product Name	Chapter	UN No.
o-Nitrochlorobenzene	**O-CHLORONITROBENZENE**	17	
NITROETHANE		17	2842
NITROETHANE(80%)/ NITROPROPANE(20%)		17	
NITROETHANE, 1-NITROPROPANE (EACH 15% OR MORE) MIXTURE		17	
ortho-Nitrophenol	**O-NITROPHENOL (MOLTEN)**	17	
2-Nitrophenol	**O-NITROPHENOL (MOLTEN)**	17	
2-Nitrophenol (molten)	**O-NITROPHENOL (MOLTEN)**	17	
o-Nitrophenol	**O-NITROPHENOL (MOLTEN)**	17	
O-NITROPHENOL (MOLTEN)		17	1663
1- OR 2-NITROPROPANE		17	2608
NITROPROPANE (60%)/NITROETHANE (40%) MIXTURE		17	
2-Nitrotoluene	**O- OR P-NITROTOLUENES**	17	
4-Nitrotoluene	**O- OR P-NITROTOLUENES**	17	
o-Nitrotoluene	**O- OR P-NITROTOLUENES**	17	
p-Nitrotoluene	**O- OR P-NITROTOLUENES**	17	
O- OR P-NITROTOLUENES		17	1664
NONANE (ALL ISOMERS)		17	1920
1-Nonanecarboxylic acid	**DECANOIC ACID**	17	
n-Nonane	**NONANE (ALL ISOMERS)**	17	
NONANOIC ACID (ALL ISOMERS)		17	
Nonanols	**NONYL ALCOHOL (ALL ISOMERS)**	17	
NONENE (ALL ISOMERS)		17	
NONYL ALCOHOL (ALL ISOMERS)		17	
Nonylcarbinol	**DECYL ALCOHOL (ALL ISOMERS)**	17	
Nonylene	**NONENE (ALL ISOMERS)**	17	
Nonyl hydride	**NONANE (ALL ISOMERS)**	17	
NONYL METHACRYLATE MONOMER		17	
NONYLPHENOL		17	
NONYLPHENOL POLY(4+)ETHOXYLATE		17	
alpha-4-Nonylphenyl-omega-hydroxypoly(oxyethylene)	**ALKARYL POLYETHERS (C9-C20)**	17	
Nopinen	**BETA-PINENE**	17	
Nopinene	**BETA-PINENE**	17	
NOXIOUS LIQUID, NF, (1) N.O.S. (TRADE NAME ...., CONTAINS ....) ST1, CAT. X		17	
NOXIOUS LIQUID, F, (2) N.O.S. (TRADE NAME ...., CONTAINS ....) ST1, CAT. X		17	
NOXIOUS LIQUID, NF, (3) N.O.S. (TRADE NAME ...., CONTAINS ....) ST2, CAT. X		17	
NOXIOUS LIQUID, F, (4) N.O.S. (TRADE NAME ...., CONTAINS ....) ST2, CAT. X		17	
NOXIOUS LIQUID, NF, (5) N.O.S. (TRADE NAME ...., CONTAINS ....) ST2, CAT. Y		17	
NOXIOUS LIQUID, F, (6) N.O.S. (TRADE NAME ...., CONTAINS ....) ST2, CAT. Y		17	
NOXIOUS LIQUID, NF, (7) N.O.S. (TRADE NAME ...., CONTAINS ....) ST3, CAT. Y		17	
NOXIOUS LIQUID, F, (8) N.O.S. (TRADE NAME ...., CONTAINS ....) ST3, CAT. Y		17	
NOXIOUS LIQUID, NF, (9) N.O.S. (TRADE NAME ...., CONTAINS ....) ST3, CAT. Z		17	
NOXIOUS LIQUID, F, (10) N.O.S. (TRADE NAME ...., CONTAINS ....) ST3, CAT. Z		17	

Index Name	Product Name	Chapter	UN No.
NOXIOUS LIQUID, (11) N.O.S. (TRADE NAME ...., CONTAINS ....) CAT. Z		18	
NON NOXIOUS LIQUID, (12) N.O.S. (TRADE NAME ...., CONTAINS ....) CAT. OS		18	
Octadecan-1-ol	**ALCOHOLS (C13+)**	17	
1-Octadecanol	**ALCOHOLS (C13+)**	17	
Octanal	**OCTYL ALDEHYDES**	17	
OCTANE (ALL ISOMERS)		17	1262
OCTANOIC ACID (ALL ISOMERS)		17	
OCTANOL (ALL ISOMERS)		17	
Octan-1-ol	**OCTANOL (ALL ISOMERS)**	17	
OCTENE (ALL ISOMERS)		17	
Octic acid	**OCTANOIC ACID (ALL ISOMERS)**	17	
Octoic acid	**OCTANOIC ACID (ALL ISOMERS)**	17	
Octyl acetate	**N-OCTYL ACETATE**	17	
N-OCTYL ACETATE		17	
Octyl acrylate	**2-ETHYLHEXYL ACRYLATE**	17	
Octyl adipate	**DI-(2-ETHYLHEXYL) ADIPATE**	17	
Octyl alcohol	**OCTANOL (ALL ISOMERS)**	17	
OCTYL ALDEHYDES		17	1191
Octylcarbinol	**NONYL ALCOHOL (ALL ISOMERS)**	17	
OCTYL DECYL ADIPATE		17	
Octyl decyl phthalate	**DIALKYL (C7-C13) PHTHALATES**	17	
Octylic acid	**OCTANOIC ACID (ALL ISOMERS)**	17	
Octyl nitrate	**ALKYL (C7-C9) NITRATES**	17	
Octyl nitrates (all isomers)	**ALKYL (C7-C9) NITRATES**	17	
Octyl phthalate	**DIALKYL (C7-C13) PHTHALATES**	17	
Oenanthic acid	**N-HEPTANOIC ACID**	17	
Oenanthylic acid	**N-HEPTANOIC ACID**	17	
Oil of Mirbane	**NITROBENZENE**	17	
Oil of Myrbane	**NITROBENZENE**	17	
Oil of turpentine	**TURPENTINE**	17	
Oil of vitriol	**OLEUM**	17	
Oil of vitriol	**SULPHURIC ACID**	17	
Oil of wintergreen	**METHYL SALICYLATE**	17	
Oleamine	**OLEYLAMINE**	17	
OLEFIN-ALKYL ESTER COPOLYMER (MOLECULAR WEIGHT 2000+)		17	
OLEFIN MIXTURES (C5-C7)		17	
OLEFIN MIXTURES (C5-C15)		17	
OLEFINS (C13+, ALL ISOMERS)		17	
ALPHA-OLEFINS (C6-C18) MIXTURES		17	
OLEIC ACID		17	
OLEUM		17	1831
OLEYLAMINE		17	
OLIVE OIL		17	
Orthophosphoric acid	**PHOSPHORIC ACID**	17	
Oxal	**GLYOXAL SOLUTION (40% OR LESS)**	17	
Oxaldehyde	**GLYOXAL SOLUTION (40% OR LESS)**	17	
3-Oxapentane-1,5-diol	**DIETHYLENE GLYCOL**	18	
1,4-Oxazinane	**MORPHOLINE**	17	
2-Oxetanone	**BETA-PROPIOLACTONE**	17	
Oxoacetic acid	**GLYOXYLIC ACID SOLUTION (50 % OR LESS)**	17	
Oxoethanoic acid	**GLYOXYLIC ACID SOLUTION (50 % OR LESS)**	17	

Index Name	Product Name	Chapter	UN No.
2,2'-Oxybis(1-chloropropane)	**2,2'-DICHLOROISOPROPYL ETHER**	17	
2,2'-Oxybis(ethyleneoxy)diethanol	**TETRAETHYLENE GLYCOL**	17	
2,2'-Oxybispropane	**ISOPROPYL ETHER**	17	
2,2'-Oxydiethanol	**DIETHYLENE GLYCOL**	18	
1,1'-Oxydipropan-2-ol	**DIPROPYLENE GLYCOL**	17	
Oxyethanoic acid	**GLYCOLIC ACID SOLUTION (70% OR LESS)**	17	
OXYGENATED ALIPHATIC HYDROCARBON MIXTURE		17	1993
Oxymethylene	**FORMALDEHYDE SOLUTIONS (45% OR LESS)**	17	
PALM ACID OIL		17	
PALM FATTY ACID DISTILLATE		17	
PALM KERNEL ACID OIL		17	
PALM KERNEL OIL		17	
PALM KERNEL OLEIN		17	
PALM KERNEL STEARIN		17	
PALM MID FRACTION		17	
PALM OIL		17	
NON-EDIBLE INDUSTRIAL GRADE PALM OIL		17	
PALM OIL FATTY ACID METHYL ESTER		17	
PALM OLEIN		17	
PALM STEARIN		17	
Paraffin	**PARAFFIN WAX**	17	
Paraffin jelly	**PETROLATUM**	17	
Paraffin scale	**PARAFFIN WAX**	17	
n-Paraffins (C10-C20)	**N-ALKANES (C10+)**	17	
PARAFFIN WAX		17	
PARALDEHYDE		17	1264
PARALDEHYDE-AMMONIA REACTION PRODUCT		17	2920
Pear oil	**AMYL ACETATE (ALL ISOMERS)**	17	
Pelargonic acid	**NONANOIC ACID (ALL ISOMERS)**	17	
Pelargonic alcohol	**NONYL ALCOHOL (ALL ISOMERS)**	17	
PENTACHLOROETHANE		17	1669
Pentadecanol	**ALCOHOLS (C13+)**	17	
Pentadec-1-ene	**OLEFINS (C13+, ALL ISOMERS)**	17	
1-Pentadecene	**OLEFINS (C13+, ALL ISOMERS)**	17	
Penta-1,3-diene	**1,3-PENTADIENE**	17	
1,3-PENTADIENE		17	
Pentaethylene glycol	**POLYETHYLENE GLYCOL**	17	
PENTAETHYLENEHEXAMINE		17	
Pentalin	**PENTACHLOROETHANE**	17	
Pentamethylene	**CYCLOPENTANE**	17	
2,2,4,6,6-Pentamethyl-4-heptanethiol	**TERT-DODECANETHIOL**	17	
Pentanal	**VALERALDEHYDE (ALL ISOMERS)**	17	
Pentane	**PENTANE (ALL ISOMERS)**	17	
PENTANE (ALL ISOMERS)		17	1265
Pentanedial solutions, 50% or less	**GLUTARALDEHYDE SOLUTIONS (50% OR LESS)**	17	
n-Pentane	**PENTANE (ALL ISOMERS)**	17	
PENTANOIC ACID		17	
N-PENTANOIC ACID (64%)/2-METHYL BUTYRIC ACID (36%) MIXTURE		17	
tert-Pentanoic acid	**TRIMETHYLACETIC ACID**	17	
Pentan-1-ol	**N-AMYL ALCOHOL**	17	

Index Name	Product Name	Chapter	UN No.
1-Pentanol	**N-AMYL ALCOHOL**	17	
Pentan-2-ol	**SEC-AMYL ALCOHOL**	17	
2-Pentanol	**SEC-AMYL ALCOHOL**	17	
Pentan-3-ol	**SEC-AMYL ALCOHOL**	17	
3-Pentanol	**SEC-AMYL ALCOHOL**	17	
1-Pentanol acetate	**AMYL ACETATE (ALL ISOMERS)**	17	
n-Pentanol	**N-AMYL ALCOHOL**	17	
sec-Pentanol	**SEC-AMYL ALCOHOL**	17	
tert-Pentanol	**TERT-AMYL ALCOHOL**	17	
Pentan-2-one	**METHYL PROPYL KETONE**	18	
2-Pentanone	**METHYL PROPYL KETONE**	18	
Pentasodium diethylenetriaminepentaacetate	**DIETHYLENETRIAMINEPENTAACETIC ACID, PENTASODIUM**	17	
PENTENE (ALL ISOMERS)		17	
Pent-1-ene	**PENTENE (ALL ISOMERS)**	17	
n-Pentene	**PENTENE (ALL ISOMERS)**	17	
Pentenes	**PENTENE (ALL ISOMERS)**	17	
Pentyl acetate	**AMYL ACETATE (ALL ISOMERS)**	17	
sec-Pentyl acetate	**AMYL ACETATE (ALL ISOMERS)**	17	
Pentyl alcohol	**N-AMYL ALCOHOL**	17	
sec-Pentyl alcohol	**SEC-AMYL ALCOHOL**	17	
tert-Pentyl alcohol	**TERT-AMYL ALCOHOL**	17	
Pentyl propanoate	**N-PENTYL PROPIONATE**	17	
N-PENTYL PROPIONATE		17	1993
PERCHLOROETHYLENE		17	1897
Perchloromethane	**CARBON TETRACHLORIDE**	17	
Perhydroazepine	**HEXAMETHYLENEIMINE**	17	
PETROLATUM		17	
Petroleum jelly	**PETROLATUM**	17	
Phene	**BENZENE AND MIXTURES HAVING 10% BENZENE OR MORE**	17	
Phenic acid	**PHENOL**	17	
PHENOL		17	2312
2-Phenoxyethanol	**ETHYLENE GLYCOL PHENYL ETHER**	17	
Phenyl alkane(C10-C21)sulphonate	**ALKYL SULPHONIC ACID ESTER OF PHENOL**	17	
Phenylamine	**ANILINE**	17	
N-Phenyl aniline	**DIPHENYLAMINE (MOLTEN)**	17	
N-Phenylbenzenamine	**DIPHENYLAMINE (MOLTEN)**	17	
1-Phenylbutane	**BUTYLBENZENE (ALL ISOMERS)**	17	
2-Phenylbutane	**BUTYLBENZENE (ALL ISOMERS)**	17	
Phenyl carbinol	**BENZYL ALCOHOL**	17	
Phenyl 'cellosolve'	**ETHYLENE GLYCOL PHENYL ETHER**	17	
Phenyl chloride	**CHLOROBENZENE**	17	
1-Phenyldecane	**ALKYL(C9+)BENZENES**	17	
1-Phenyldodecane	**ALKYL(C9+)BENZENES**	17	
Phenylethane	**ETHYLBENZENE**	17	
Phenyl ether	**DIPHENYL ETHER**	17	
Phenylethylene	**STYRENE MONOMER**	17	
1-Phenylethylxylene	**1-PHENYL-1-XYLYL ETHANE**	17	
Phenyl hydride	**BENZENE AND MIXTURES HAVING 10% BENZENE OR MORE**	17	
Phenyl hydroxide	**PHENOL**	17	
Phenylic acid	**PHENOL**	17	
Phenylmethane	**TOLUENE**	17	
Phenylmethanol	**BENZYL ALCOHOL**	17	
Phenylmethyl acetate	**BENZYL ACETATE**	17	

Index Name	Product Name	Chapter	UN No.
1-Phenylpropane	**PROPYLBENZENE (ALL ISOMERS)**	17	
2-Phenylpropane	**PROPYLBENZENE (ALL ISOMERS)**	17	
2-Phenylpropene	**ALPHA-METHYLSTYRENE**	17	
1-Phenyltetradecane	**ALKYL(C9+)BENZENES**	17	
1-Phenyltridecane	**ALKYL(C9+)BENZENES**	17	
1-Phenylundecane	**ALKYL(C9+)BENZENES**	17	
Phenylxylylethane	**1-PHENYL-1-XYLYL ETHANE**	17	
1-PHENYL-1-XYLYL ETHANE		17	
1-Phenyl-1-(2,5-xylyl)ethane	**1-PHENYL-1-XYLYL ETHANE**	17	
1-Phenyl-1-(3,4-xylyl)ethane	**1-PHENYL-1-XYLYL ETHANE**	17	
PHOSPHATE ESTERS, ALKYL (C12-C14) AMINE		17	2053
L-alpha-Phosphatidyl choline	**LECITHIN**	18	
N-(phosphonomethyl)glycine	**GLYPHOSATE SOLUTION (NOT CONTAINING SURFACTANT)**	17	
PHOSPHORIC ACID		17	1805
PHOSPHORUS, YELLOW OR WHITE		17	1381, 244
Phthalandione	**PHTHALIC ANHYDRIDE (MOLTEN)**	17	
Phthalic acid anhydride	**PHTHALIC ANHYDRIDE (MOLTEN)**	17	
Phthalic acid, diundecyl ester	**DIUNDECYL PHTHALATE**	17	
PHTHALIC ANHYDRIDE (MOLTEN)		17	2214
2-Picoline	**2-METHYLPYRIDINE**	17	
3-Picoline	**3-METHYLPYRIDINE**	17	
4-Picoline	**4-METHYLPYRIDINE**	17	
alpha-Picoline	**2-METHYLPYRIDINE**	17	
beta-Picoline	**3-METHYLPYRIDINE**	17	
gamma-Picoline	**4-METHYLPYRIDINE**	17	
Pimelic ketone	**CYCLOHEXANONE**	17	
2-Pinene	**ALPHA-PINENE**	17	
2(10)-Pinene	**BETA-PINENE**	17	
ALPHA-PINENE		17	2368
BETA-PINENE		17	2368
PINE OIL		17	1272
2-Piperazin-1-ylethylamine	**N-AMINOETHYLPIPERAZINE**	17	
Piperylene	**1,3-PENTADIENE**	17	
Pivalic acid	**TRIMETHYLACETIC ACID**	17	
Poly(oxyethyleneoxyethyleneoxyphthaloyl)	**DIETHYLENE GLYCOL PHTHALATE**	17	
Poly(propylene oxide)	**POLYPROPYLENE GLYCOL**	17	
Poly(sodium carboxylatoethylene)	**SODIUM POLY(4+)ACRYLATE SOLUTIONS**	17	
POLYACRYLIC ACID SOLUTION (40% OR LESS)		17	
POLYALKYL (C18-C22) ACRYLATE IN XYLENE		17	
POLY(2-8)ALKYLENE GLYCOL MONOALKYL(C1-C6) ETHER		17	
POLY(2-8)ALKYLENE GLYCOL MONOALKYL (C1-C6) ETHER ACETATE		17	
Poly (2-8) alkylene (C2-C3) glycols / Polyalkylene (C2-C10) glycol monoalkyl (C1-C4) ethers and their borate esters	**BRAKE FLUID BASE MIX: POLY(2-8)ALKYLENE (C2-C3)**	17	
POLYALKYL (C10-C20) METHACRYLATE		17	
POLYALKYL (C10-C18) METHACRYLATE/ETHYLENE-PROPYLENE COPOLYMER MIXTURE		17	3257
POLYALUMINIUM CHLORIDE SOLUTION		18	
POLYBUTENE		17	

Index Name	Product Name	Chapter	UN No.
POLYBUTENYL SUCCINIMIDE		17	
POLY(2+)CYCLIC AROMATICS		17	
POLYETHER (MOLECULAR WEIGHT 1350+)		17	
POLYETHYLENE GLYCOL		17	
Poly(4-12)ethylene glycol alkyl(C7-C11)phenyl ether	**NONYLPHENOL POLY(4+)ETHOXYLATE**	17	
POLYETHYLENE GLYCOL DIMETHYL ETHER		17	
Polyethylene glycols, mono(p-nonylphenyl) ether	**ALKARYL POLYETHERS (C9-C20)**	17	
Polyethylene polyamines (in C5 - C20 paraffin oil).	**POLYETHYLENE POLYAMINES (MORE THAN 50% C5 -C20**	17	
Poly[ethylene oxide]	**POLYETHER (MOLECULAR WEIGHT 1350+)**	17	
POLYETHYLENE POLYAMINES		17	
POLYETHYLENE POLYAMINES (MORE THAN 50% C5 -C20 PARAFFIN OIL)		17	2734(i) 2
POLYFERRIC SULPHATE SOLUTION		17	
Polyglucitol	**HYDROGENATED STARCH HYDROLYSATE**	18	
POLYGLYCERIN, SODIUM SALT SOLUTION (CONTAINING LESS THAN 3% SODIUM HYDROXIDE)		18	
Polyglycitol syrup	**HYDROGENATED STARCH HYDROLYSATE**	18	
POLY(IMINOETHYLENE)-GRAFT-N-POLY(ETHYLENEOXY) SOLUTION (90% OR LESS)		17	
	POLYETHYLENE POLYAMINES (MORE THAN 50% C5 -C20	17	
POLYISOBUTENAMINE IN ALIPHATIC (C10-C14) SOLVENT		17	
POLYISOBUTENYL ANHYDRIDE ADDUCT		17	
Polyisobutylene	**POLY(4+)ISOBUTYLENE**	17	
POLY(4+)ISOBUTYLENE		17	
POLYMETHYLENE POLYPHENYL ISOCYANATE		17	2206(i) 2
POLYOLEFIN (MOLECULAR WEIGHT 300+)		17	
POLYOLEFIN AMIDE ALKENEAMINE (C17+)		17	
POLYOLEFIN AMIDE ALKENEAMINE BORATE (C28-C250)		17	
POLYOLEFINAMINE (C28-C250)		17	
POLYOLEFINAMINE IN ALKYL (C2-C4) BENZENES		17	
POLYOLEFINAMINE IN AROMATIC SOLVENT		17	
POLYOLEFIN AMINOESTER SALTS (MOLECULAR WEIGHT 2000+)		17	
POLYOLEFIN ANHYDRIDE		17	
POLYOLEFIN ESTER (C28-C250)		17	
POLYOLEFIN PHENOLIC AMINE (C28-C250)		17	
POLYOLEFIN PHOSPHOROSULPHIDE, BARIUM DERIVATIVE (C28-C250)		17	
Poly[oxyethylene]	**POLYETHER (MOLECULAR WEIGHT 1350+)**	17	
POLY(20)OXYETHYLENE SORBITAN MONOOLEATE		17	
poly[oxy-p-phenylenemethylene-p-phenyleneoxy(2-hydroxytrimethylene)]	**DIGLYCIDYL ETHER OF BISPHENOL F**	17	
Poly[oxypropylene]	**POLYETHER (MOLECULAR WEIGHT 1350+)**	17	
poly[(phenyl isocyanate)-alt-formaldehyde]	**POLYMETHYLENE POLYPHENYL ISOCYANATE**	17	

Index Name	Product Name	Chapter	UN No.
Poly[(phenyl isocyanate)-co-formaldehyde]	**POLYMETHYLENE POLYPHENYL ISOCYANATE**	17	
Polyphenyl-polymethylene isocyanate	**POLYMETHYLENE POLYPHENYL ISOCYANATE**	17	
Poly[propene oxide]	**POLYETHER (MOLECULAR WEIGHT 1350+)**	17	
Polypropylene	**POLY(5+)PROPYLENE**	17	
POLY(5+)PROPYLENE		17	
POLYPROPYLENE GLYCOL		17	
POLYSILOXANE		17	
Potassium chloride drilling brine	**POTASSIUM CHLORIDE SOLUTION**	17	
POTASSIUM CHLORIDE SOLUTION		17	
POTASSIUM FORMATE SOLUTIONS		18	
POTASSIUM HYDROXIDE SOLUTION		17	1814
POTASSIUM OLEATE		17	
POTASSIUM THIOSULPHATE (50% OR LESS)		17	
Propanal	**PROPIONALDEHYDE**	17	
Propan-1-amine	**N-PROPYLAMINE**	17	
2-Propanamine	**ISOPROPYLAMINE**	17	
Propane-1,2-diol	**PROPYLENE GLYCOL**	18	
1,2-Propanediol	**PROPYLENE GLYCOL**	18	
1,2-Propanediol cyclic carbonate	**PROPYLENE CARBONATE**	18	
Propanenitrile	**PROPIONITRILE**	17	
Propane-1,2,3-triol	**GLYCERINE**	18	
1,2,3-Propanetriol	**GLYCERINE**	18	
1,2,3-Propane triol triacetate	**GLYCERYL TRIACETATE**	17	
Propanoic acid	**PROPIONIC ACID**	17	
Propanoic anhydride	**PROPIONIC ANHYDRIDE**	17	
Propanol	**N-PROPYL ALCOHOL**	17	
Propan-1-ol	**N-PROPYL ALCOHOL**	17	
1-Propanol	**N-PROPYL ALCOHOL**	17	
Propan-2-ol	**ISOPROPYL ALCOHOL**	18	
2-Propanol	**ISOPROPYL ALCOHOL**	18	
N-PROPANOLAMINE		17	
3-Propanolide	**BETA-PROPIOLACTONE**	17	
n-Propanol	**N-PROPYL ALCOHOL**	17	
Propanone	**ACETONE**	18	
Propan-2-one	**ACETONE**	18	
2-Propanone	**ACETONE**	18	
Propenamide solution, 50% or less	**ACRYLAMIDE SOLUTION (50% OR LESS)**	17	
Propenenitrile	**ACRYLONITRILE**	17	
Propene oxide	**PROPYLENE OXIDE**	17	
2-Propenoic acid, homopolymer solution (40% or less)	**POLYACRYLIC ACID SOLUTION (40% OR LESS)**	17	
Propenoic acid	**ACRYLIC ACID**	17	
1-Propenol-3	**ALLYL ALCOHOL**	17	
Prop-2-en-1-ol	**ALLYL ALCOHOL**	17	
2-Propen-1-ol	**ALLYL ALCOHOL**	17	
Propenyl alcohol	**ALLYL ALCOHOL**	17	
Propiolactone	**BETA-PROPIOLACTONE**	17	
BETA-PROPIOLACTONE		17	
PROPIONALDEHYDE		17	1275
PROPIONIC ACID		17	1848
Propionic aldehyde	**PROPIONALDEHYDE**	17	
PROPIONIC ANHYDRIDE		17	2496

Index Name	Product Name	Chapter	UN No.
PROPIONITRILE		17	2404
beta-Propionolactone	**BETA-PROPIOLACTONE**	17	
Propiononitrile	**PROPIONITRILE**	17	
Propionyl oxide	**PROPIONIC ANHYDRIDE**	17	
1-Propoxypropan-2-ol	**PROPYLENE GLYCOL MONOALKYL ETHER**	17	
Propyl acetate	**N-PROPYL ACETATE**	17	
N-PROPYL ACETATE		17	
Propyl acetone	**METHYL BUTYL KETONE**	17	
Propyl alcohol	**N-PROPYL ALCOHOL**	17	
2-Propyl alcohol	**ISOPROPYL ALCOHOL**	18	
N-PROPYL ALCOHOL		17	1274
sec-Propyl alcohol	**ISOPROPYL ALCOHOL**	18	
Propyl aldehyde	**PROPIONALDEHYDE**	17	
Propylamine	**N-PROPYLAMINE**	17	
N-PROPYLAMINE		17	1277
PROPYLBENZENE (ALL ISOMERS)		17	
n-Propylbenzene	**PROPYLBENZENE (ALL ISOMERS)**	17	
Propylcarbinol	**N-BUTYL ALCOHOL**	18	
Propylene aldehyde	**CROTONALDEHYDE**	17	
2,2'-[Propylenebis(nitrilomethylene)]diphenol	**ALKYL (C8-C9) PHENYLAMINE IN AROMATIC SOLVENTS**	17	
PROPYLENE CARBONATE		18	
Propylene chloride	**1,2-DICHLOROPROPANE**	17	
Propylene dichloride	**1,2-DICHLOROPROPANE**	17	
alpha,alpha'- (Propylenedinitrilo)di-o-cresol	**ALKYL (C8-C9) PHENYLAMINE IN AROMATIC SOLVENTS**	17	
Propylene epoxide	**PROPYLENE OXIDE**	17	
PROPYLENE GLYCOL		18	
1,2-Propylene glycol	**PROPYLENE GLYCOL**	18	
Propylene glycol n-butyl ether	**PROPYLENE GLYCOL MONOALKYL ETHER**	17	
Propylene glycol ethyl ether	**PROPYLENE GLYCOL MONOALKYL ETHER**	17	
Propylene glycol methyl ether	**PROPYLENE GLYCOL MONOALKYL ETHER**	17	
PROPYLENE GLYCOL METHYL ETHER ACETATE		17	
PROPYLENE GLYCOL MONOALKYL ETHER		17	
Propylene glycol monobutyl ether	**PROPYLENE GLYCOL MONOALKYL ETHER**	17	
Propylene glycol monomethyl ether	**PROPYLENE GLYCOL MONOALKYL ETHER**	17	
PROPYLENE GLYCOL PHENYL ETHER		17	
Propylene glycol propyl ether	**PROPYLENE GLYCOL MONOALKYL ETHER**	17	
Propylene glycol trimer	**TRIPROPYLENE GLYCOL**	17	
1,2-Propylene glycol trimer	**TRIPROPYLENE GLYCOL**	17	
Propylene glyco beta-monoethyl ether	**PROPYLENE GLYCOL MONOALKYL ETHER**	17	
PROPYLENE OXIDE		17	1280
PROPYLENE TETRAMER		17	2850
PROPYLENE TRIMER		17	2057
Propylethylene	**PENTENE (ALL ISOMERS)**	17	
Propyl methyl ketone	**METHYL PROPYL KETONE**	18	
N-Propyl-1-propanamine	**DI-N-PROPYLAMINE**	17	
Pseudobutylene glycol	**BUTYLENE GLYCOL**	17	
Pseudocumene	**TRIMETHYLBENZENE (ALL ISOMERS)**	17	
Pseudopinen	**BETA-PINENE**	17	
Psuedopinene	**BETA-PINENE**	17	
Pygas	**PYROLYSIS GASOLINE (CONTAINING BENZENE)**	17	
PYRIDINE		17	1282

Index Name	Product Name	Chapter	UN No.
Pyroacetic acid	**ACETONE**	18	
Pyroacetic ether	**ACETONE**	18	
PYROLYSIS GASOLINE (CONTAINING BENZENE)		17	
Pyrolysis gasoline (steam-cracked naphtha)	**BENZENE AND MIXTURES HAVING 10% BENZENE OR MORE**	17	
Pyrolysis gasoline, containing 10% or more benzene	**BENZENE AND MIXTURES HAVING 10% BENZENE OR MORE**	17	
Pyromucic aldehyde	**FURFURAL**	17	
RAPESEED OIL		17	
RAPE SEED OIL FATTY ACID METHYL ESTERS		17	
RICE BRAN OIL		17	
ROSIN		17	
Rubbing alcohol	**ISOPROPYL ALCOHOL**	18	
Safety solvent	**WHITE SPIRIT, LOW (15-20%) AROMATIC**	17	
SAFFLOWER OIL		17	
Saturated fatty acid (C13 and above)	**FATTY ACID (SATURATED C13+)**	17	
SHEA BUTTER		17	
Silvite	**POTASSIUM CHLORIDE SOLUTION**	17	
Sludge acid	**SULPHURIC ACID, SPENT**	17	
Soda ash	**SODIUM CARBONATE SOLUTION**	17	
Soda lye	**SODIUM HYDROXIDE SOLUTION**	17	
SODIUM ACETATE SOLUTIONS		18	
Sodium acid sulphite	**SODIUM HYDROGEN SULPHITE SOLUTION (45% OR LESS)**	17	
Sodium alkylbenzene sulphonate	**ALKYLBENZENE SULPHONIC ACID, SODIUM SALT SOLUTION**	17	
SODIUM ALKYL (C14-C17) SULPHONATES (60-65% SOLUTION)		17	
SODIUM ALUMINOSILICATE SLURRY		17	
Sodium aminoacetate solution	**GLYCINE, SODIUM SALT SOLUTION**	17	
SODIUM BENZOATE		17	
Sodium 1,3-benzothiazole-2-thiolate solution	**MERCAPTOBENZOTHIAZOL, SODIUM SALT SOLUTION**	17	
Sodium 1,3-benzothiazol-2-yl sulphide solution	**MERCAPTOBENZOTHIAZOL, SODIUM SALT SOLUTION**	17	
Sodium bichromate	**SODIUM DICHROMATE SOLUTION (70% OR LESS)**	17	
Sodium bisulphide	**SODIUM HYDROSULPHIDE SOLUTION (45% OR LESS)**	17	
SODIUM BOROHYDRIDE (15% OR LESS)/SODIUM HYDROXIDE SOLUTION		17	
SODIUM CARBONATE SOLUTION		17	
SODIUM CHLORATE SOLUTION (50% OR LESS)		17	2428
Sodium cresylate	**CRESYLIC ACID, SODIUM SALT SOLUTION**	17	
SODIUM DICHROMATE SOLUTION (70% OR LESS)		17	
Sodium glycinate solution	**GLYCINE, SODIUM SALT SOLUTION**	17	
Sodium hydrate	**SODIUM HYDROXIDE SOLUTION**	17	
Sodium hydrogensulphide	**SODIUM HYDROSULPHIDE SOLUTION (45% OR LESS)**	17	
SODIUM HYDROGEN SULPHIDE (6% OR LESS)/SODIUM CARBONATE (3% OR LESS) SOLUTION		17	
SODIUM HYDROGEN SULPHITE SOLUTION (45% OR LESS)		17	2693
SODIUM HYDROSULPHIDE/AMMONIUM SULPHIDE SOLUTION		17	
SODIUM HYDROSULPHIDE SOLUTION (45% OR LESS)		17	2949
SODIUM HYDROXIDE SOLUTION		17	1824

Index Name	Product Name	Chapter	UN No.
SODIUM HYPOCHLORITE SOLUTION (15% OR LESS)		17	1791
Sodium lignosulphonate	**LIGNINSULPHONIC ACID, SODIUM SALT SOLUTION**	17	
Sodium mercaptan	**SODIUM HYDROSULPHIDE SOLUTION (45% OR LESS)**	17	
Sodium mercaptide	**SODIUM HYDROSULPHIDE SOLUTION (45% OR LESS)**	17	
Sodium methylcarbamodithioate	**METAM SODIUM SOLUTION**	17	
Sodium N-methyldithiocarbamate	**METAM SODIUM SOLUTION**	17	
Sodium methyldithiocarbamate solution	**METAM SODIUM SOLUTION**	17	
SODIUM NITRITE SOLUTION		17	1500
SODIUM PETROLEUM SULPHONATE		17	
SODIUM POLY(4+)ACRYLATE SOLUTIONS		17	
Sodium rhodanate	**SODIUM THIOCYANATE SOLUTION (56% OR LESS)**	17	
Sodium rhodanide	**SODIUM THIOCYANATE SOLUTION (56% OR LESS)**	17	
Sodium salt of sulphonated naphthaleneformaldehyde condensate	**NAPHTHALENESULPHONIC ACID-FORMALDEHYDE**	17	
SODIUM SILICATE SOLUTION		17	
SODIUM SULPHATE SOLUTIONS		18	
SODIUM SULPHIDE SOLUTION (15% OR LESS)		17	1385
SODIUM SULPHITE SOLUTION (25% OR LESS)		17	
Sodium sulphocyanate	**SODIUM THIOCYANATE SOLUTION (56% OR LESS)**	17	
Sodium sulphocyanide	**SODIUM THIOCYANATE SOLUTION (56% OR LESS)**	17	
Sodium sulphydrate	**SODIUM HYDROSULPHIDE SOLUTION (45% OR LESS)**	17	
Sodium tetrahydroborate (15% or less) / sodium hydroxide solution	**SODIUM BOROHYDRIDE (15% OR LESS)/SODIUM**	17	
SODIUM THIOCYANATE SOLUTION (56% OR LESS)		17	
Sodium tolyl oxides	**CRESYLIC ACID, SODIUM SALT SOLUTION**	17	
'D-D Soil fumigant'	**DICHLOROPROPENE/DICHLOROPROPANE MIXTURES**	17	
d-Sorbite	**SORBITOL SOLUTION**	18	
d-Sorbitol	**SORBITOL SOLUTION**	18	
SORBITOL SOLUTION		18	
SOYABEAN OIL		17	
Spirit of turpentine	**TURPENTINE**	17	
Spirits of wine	**ETHYL ALCOHOL**	18	
Stoddard solvent	**WHITE SPIRIT, LOW (15-20%) AROMATIC**	17	
STYRENE MONOMER		17	2055
Styrol	**STYRENE MONOMER**	17	
Suberane	**CYCLOHEPTANE**	17	
Sulfonic acid, alkane(C10-C21) phenyl ester	**ALKYL SULPHONIC ACID ESTER OF PHENOL**	17	
SULPHOHYDROCARBON (C3-C88)		17	
SULPHOLANE		17	
SULPHONATED POLYACRYLATE SOLUTION		18	
SULPHUR (MOLTEN)		17	2448
SULPHURIC ACID		17	1830
Sulphuric acid, fuming	**OLEUM**	17	
SULPHURIC ACID, SPENT		17	1832
Sulphuric chlorohydrin	**CHLOROSULPHONIC ACID**	17	
Sulphuric ether	**DIETHYL ETHER**	17	
SULPHURIZED FAT (C14-C20)		17	
SULPHURIZED POLYOLEFINAMIDE ALKENE (C28-C250) AMINE		17	
SUNFLOWER SEED OIL		17	

Index Name	Product Name	Chapter	UN No.
Sweet-birch oil	**METHYL SALICYLATE**	17	
sym-Dichloroethane	**ETHYLENE DICHLORIDE**	17	
sym-Dichloroethyl ether	**DICHLOROETHYL ETHER**	17	
sym-Dimethylethylene glycol	**BUTYLENE GLYCOL**	17	
sym-Tetrachloroethane	**TETRACHLOROETHANE**	17	
sym-Trichlorobenzene	**1,2,4-TRICHLOROBENZENE**	17	
sym-Trioxane	**1,3,5-TRIOXANE**	17	
TALL OIL, CRUDE		17	
TALL OIL, DISTILLED		17	
TALL OIL FATTY ACID (RESIN ACIDS LESS THAN 20%)		17	
TALL OIL PITCH		17	
TALLOW		17	
TALLOW FATTY ACID		17	
Tar acids	**CRESOLS (ALL ISOMERS)**	17	
Tar camphor	**NAPHTHALENE (MOLTEN)**	17	
Terebenthene	**BETA-PINENE**	17	
3,6,9,12-Tetraazatetradecamethylenediamine	**PENTAETHYLENEHEXAMINE**	17	
3,6,9,12-Tetraazatetradecane-1,14-diamine	**PENTAETHYLENEHEXAMINE**	17	
1,3,5,7-Tetraazatricyclo[3.3.1.13,7]-decane	**HEXAMETHYLENETETRAMINE SOLUTIONS**	18	
TETRACHLOROETHANE		17	1702
1,1,2,2-Tetrachloroethane	**TETRACHLOROETHANE**	17	
Tetrachloroethylene	**PERCHLOROETHYLENE**	17	
1,1,2,2-tetrachloroethylene	**PERCHLOROETHYLENE**	17	
Tetrachloromethane	**CARBON TETRACHLORIDE**	17	
Tetradecan-1-ol	**ALCOHOLS (C13+)**	17	
1-Tetradecanol	**ALCOHOLS (C13+)**	17	
Tetradecene	**OLEFINS (C13+, ALL ISOMERS)**	17	
Tetradecylbenzene	**ALKYL(C9+)BENZENES**	17	
TETRAETHYLENE GLYCOL		17	
TETRAETHYLENE PENTAMINE		17	2320
Tetraethyllead	**MOTOR FUEL ANTI-KNOCK COMPOUNDS (CONTAINING**	17	
Tetraethylplumbane	**MOTOR FUEL ANTI-KNOCK COMPOUNDS (CONTAINING**	17	
TETRAETHYL SILICATE MONOMER/OLIGOMER (20% IN ETHANOL)		18	
3a,4,7,7a-Tetrahydro-3,5-dimethyl-4,7-methano-1H-indene	**METHYLCYCLOPENTADIENE DIMER**	17	
TETRAHYDROFURAN		17	2056
Tetrahydro-2H-1,4-oxazine	**MORPHOLINE**	17	
TETRAHYDRONAPHTHALENE		17	
1,2,3,4-Tetrahydronapthalene	**TETRAHYDRONAPHTHALENE**	17	
Tetrahydro-1,4-oxazine	**MORPHOLINE**	17	
Tetrahydrothiophene-1-dioxide	**SULPHOLANE**	17	
Tetrahydrothiophene 1,1-dioxide	**SULPHOLANE**	17	
Tetralin	**TETRAHYDRONAPHTHALENE**	17	
TETRAMETHYLBENZENE (ALL ISOMERS)		17	
1,2,3,4-Tetramethylbenzene	**TETRAMETHYLBENZENE (ALL ISOMERS)**	17	
1,2,3,5-Tetramethylbenzene	**TETRAMETHYLBENZENE (ALL ISOMERS)**	17	
1,2,4,5-Tetramethylbenzene	**TETRAMETHYLBENZENE (ALL ISOMERS)**	17	
Tetramethylene cyanide	**ADIPONITRILE**	17	
Tetramethylene dicyanide	**ADIPONITRILE**	17	
Tetramethylene glycol	**BUTYLENE GLYCOL**	17	
Tetramethylene oxide	**TETRAHYDROFURAN**	17	

Index Name	Product Name	Chapter	UN No.
Tetramethylenesulphone	**SULPHOLANE**	17	
Tetramethyllead	**MOTOR FUEL ANTI-KNOCK COMPOUNDS (CONTAINING**	17	
Tetrapropylbenzene	**ALKYL(C9+)BENZENES**	17	
Tetrapropylenebenzene	**DODECYLBENZENE**	17	
Tetryl formate	**ISOBUTYL FORMATE**	17	
Thiacyclopentan-1,1-dioxide	**SULPHOLANE**	17	
4-thiapentanal	**3-(METHYLTHIO)PROPIONALDEHYDE**	17	
Thiocyclopentan-1,1-dioxide	**SULPHOLANE**	17	
Thiophan sulphone	**SULPHOLANE**	17	
Thiosulphuric acid, dipotassium salt	**POTASSIUM THIOSULPHATE (50% OR LESS)**	17	
Titaniuim(IV) oxide	**TITANIUM DIOXIDE SLURRY**	17	
TITANIUM DIOXIDE SLURRY		17	
TOLUENE		17	1294
TOLUENEDIAMINE		17	1709
2,4-Toluenediamine	**TOLUENEDIAMINE**	17	
2,6-Toluenediamine	**TOLUENEDIAMINE**	17	
TOLUENE DIISOCYANATE		17	2078
2-Toluidine	**O-TOLUIDINE**	17	
O-TOLUIDINE		17	1708
Toluol	**TOLUENE**	17	
o-Tolylamine	**O-TOLUIDINE**	17	
2,4-Tolylenediamine	**TOLUENEDIAMINE**	17	
2,6-Tolylenediamine	**TOLUENEDIAMINE**	17	
Tolylenediisocyanate	**TOLUENE DIISOCYANATE**	17	
2,4-Tolylene diisocyanate	**TOLUENE DIISOCYANATE**	17	
m-Tolylene diisocyanate	**TOLUENE DIISOCYANATE**	17	
Toxilic anhydride	**MALEIC ANHYDRIDE**	17	
Toxilic anhydride	**MALEIC ANHYDRIDE**	17	
trans-1,3-Pentadiene	**1,3-PENTADIENE**	17	
Treacle	**MOLASSES**	18	
Triacetin	**GLYOXAL SOLUTION (40% OR LESS)**	17	
3,6,9-Triazaundecamethylenediamine	**TETRAETHYLENE PENTAMINE**	17	
3,6,9-Triazaundecane-1,11-diamine	**TETRAETHYLENE PENTAMINE**	17	
TRIBUTYL PHOSPHATE		17	
1,2,3-TRICHLOROBENZENE (MOLTEN)		17	
1,2,4-TRICHLOROBENZENE		17	2321
1,2,3-Trichlorobenzol	**1,2,3-TRICHLOROBENZENE (MOLTEN)**	17	
1,1,1-TRICHLOROETHANE		17	2831
1,1,2-TRICHLOROETHANE		17	
beta-Trichloroethane	**1,1,2-TRICHLOROETHANE**	17	
Trichloroethene	**TRICHLOROETHYLENE**	17	
TRICHLOROETHYLENE		17	1710
Trichloromethane	**CHLOROFORM**	17	
1,2,3-TRICHLOROPROPANE		17	
1,1,2-TRICHLORO-1,2,2-TRIFLUOROETHANE		17	
TRICRESYL PHOSPHATE (CONTAINING 1% OR MORE ORTHO-ISOMER)		17	2574
TRICRESYL PHOSPHATE (CONTAINING LESS THAN 1% ORTHO-ISOMER)		17	
TRIDECANE		17	
TRIDECANOIC ACID		17	
Tridecanol	**ALCOHOLS (C13+)**	17	
Tridecene	**OLEFINS (C13+, ALL ISOMERS)**	17	

Index Name	Product Name	Chapter	UN No.
Tridecoic acid	**TRIDECANOIC ACID**	17	
TRIDECYL ACETATE		17	
Tridecyl alcohol	**ALCOHOLS (C13+)**	17	
Tridecylbenzene	**ALKYL(C9+)BENZENES**	17	
Tridecylic acid	**FATTY ACID (SATURATED C13+)**	17	
Tridecylic acid	**TRIDECANOIC ACID**	17	
Tri(dimethylphenyl) phosphate	**TRIXYLYL PHOSPHATE**	17	
TRIETHANOLAMINE		17	
TRIETHYLAMINE		17	1296
TRIETHYLBENZENE		17	
TRIETHYLENE GLYCOL		18	
Triethylene glycol butyl ether	**POLY(2-8)ALKYLENE GLYCOL MONOALKYL(C1-C6) ETHER**	17	
Triethylene glycol ethyl ether	**POLY(2-8)ALKYLENE GLYCOL MONOALKYL(C1-C6) ETHER**	17	
Triethylene glycol methyl ether	**POLY(2-8)ALKYLENE GLYCOL MONOALKYL(C1-C6) ETHER**	17	
Triethylene glycol monobutyl ether	**POLY(2-8)ALKYLENE GLYCOL MONOALKYL(C1-C6) ETHER**	17	
TRIETHYLENETETRAMINE		17	2259
TRIETHYL PHOSPHATE		17	
TRIETHYL PHOSPHITE		17	2323
Triformol	**1,3,5-TRIOXANE**	17	
Triglycol	**TRIETHYLENE GLYCOL**	18	
Tri(2-hydroxyethyl)amine	**TRIETHANOLAMINE**	17	
Tri[2-hydroxyethyl]amine	**TRIETHANOLAMINE**	17	
Trihydroxypropane	**GLYCERINE**	18	
Trihydroxytriethylamine	**TRIETHANOLAMINE**	17	
TRIISOPROPANOLAMINE		17	
TRIISOPROPYLATED PHENYL PHOSPHATES		17	
TRIMETHYLACETIC ACID		17	
TRIMETHYLAMINE SOLUTION (30% OR LESS)		17	1297
Trimethylaminomethane	**BUTYLAMINE (ALL ISOMERS)**	17	
TRIMETHYLBENZENE (ALL ISOMERS)		17	
1,2,3-Trimethylbenzene	**TRIMETHYLBENZENE (ALL ISOMERS)**	17	
1,2,4-Trimethylbenzene	**TRIMETHYLBENZENE (ALL ISOMERS)**	17	
1,3,5-Trimethylbenzene	**TRIMETHYLBENZENE (ALL ISOMERS)**	17	
2,6,6-Trimethylbicyclo[3.1.1]hept-2-ene	**ALPHA-PINENE**	17	
Trimethylcarbinol	**TERT-BUTYL ALCOHOL**	17	
1,1,3-Trimethyl-3-cyclohexene-5-one	**ISOPHORONE**	17	
3,3,5-Trimethylcyclohex-2-enone	**ISOPHORONE**	17	
3,5,5-Trimethylcyclohex-2-en-1-one	**ISOPHORONE**	17	
3,3'-Trimethylenedioxydipropan-1-ol	**TRIPROPYLENE GLYCOL**	17	
TRIMETHYLOL PROPANE PROPOXYLATED		17	
2,2,4-Trimethylpentane	**OCTANE (ALL ISOMERS)**	17	
2,2,4-TRIMETHYL-1,3-PENTANEDIOL DIISOBUTYRATE		17	
2,2,4-Trimethylpentane-1,3-diol diisobutyrate	**2,2,4-TRIMETHYL-1,3-PENTANEDIOL DIISOBUTYRATE**	17	
2,2,4-TRIMETHYL-1,3-PENTANEDIOL-1-ISOBUTYRATE		17	
2,4,4-Trimethylpentene-1	**DIISOBUTYLENE**	17	
2,4,4-Trimethylpent-1-ene	**DIISOBUTYLENE**	17	
2,4,4-Trimethylpentene-2	**DIISOBUTYLENE**	17	
2,4,4-Trimethylpent-2-ene	**DIISOBUTYLENE**	17	
2,4,6-Trimethyl-1,3,5-trioxane	**PARALDEHYDE**	17	

Index Name	Product Name	Chapter	UN No.
2,4,6-Trimethyl-s-trioxane	**PARALDEHYDE**	17	
Trioxan	**1,3,5-TRIOXANE**	17	
1,3,5-TRIOXANE		17	
5,8,11-Trioxapentadecane	**DIETHYLENE GLYCOL DIBUTYL ETHER**	17	
3,6,9-Trioxaundecane	**DIETHYLENE GLYCOL DIETHYL ETHER**	17	
Trioxin	**1,3,5-TRIOXANE**	17	
Trioxymethylene	**1,3,5-TRIOXANE**	17	
Tripropylene	**PROPYLENE TRIMER**	17	
TRIPROPYLENE GLYCOL		17	
Tripropylene glycol methyl ether	**POLY(2-8)ALKYLENE GLYCOL MONOALKYL(C1-C6) ETHER**	17	
Tris(dimethylphenyl) phosphate	**TRIXYLYL PHOSPHATE**	17	
N,N,N-Tris(2-hydroxyethyl)amine	**TRIETHANOLAMINE**	17	
2,4-D-tris(2-hydroxy-2-methylethyl)ammonium	**2,4-DICHLOROPHENOXYACETIC ACID,**	17	
Tris(2-hydroxy-2-methylethyl)ammonium 2,4-dichlorophenoxyacetate	**2,4-DICHLOROPHENOXYACETIC ACID,**	17	
Tris(2-hydroxypropyl)amine	**TRIISOPROPANOLAMINE**	17	
Tris(2-hydroxy-1-propyl)amine	**TRIISOPROPANOLAMINE**	17	
Trisodium 2-[carboxylatomethyl(2-hydroxyethyl)amino]ethyliminodi(acetate)	**N-(HYDROXYETHYL)ETHYLENEDIAMINETRIACETIC ACID,**	17	
Trisodium N-(carboxymethyl)-N'-(2-hydroxyethyl)-N,N'-ethylenediglycine	**N-(HYDROXYETHYL)ETHYLENEDIAMINETRIACETIC ACID,**	17	
Trisodium N-(2-hydroxyethyl)ethylenediamine-N,N',N'-triacetate	**N-(HYDROXYETHYL)ETHYLENEDIAMINETRIACETIC ACID,**	17	
Trisodium nitrilotriacetate solution	**NITRILOTRIACETIC ACID, TRISODIUM SALT SOLUTION**	17	
Tritolyl phosphate, containing less than 1% ortho-isomer	**TRICRESYL PHOSPHATE (CONTAINING LESS THAN 1%**	17	
Tritolyl phosphate, containing 1% or more ortho-isomer	**TRICRESYL PHOSPHATE (CONTAINING 1% OR MORE**	17	
Trixylenyl phosphate	**TRIXYLYL PHOSPHATE**	17	
TRIXYLYL PHOSPHATE		17	
TUNG OIL		17	
TURPENTINE		17	1299
Turpentine oil	**TURPENTINE**	17	
Turps	**TURPENTINE**	17	
Type A Zeolite	**SODIUM ALUMINOSILICATE SLURRY**	17	
Undecane	**N-ALKANES (C10+)**	17	
1-Undecanecarboxylic acid	**LAURIC ACID**	17	
UNDECANOIC ACID		17	
Undecan-1-ol	**UNDECYL ALCOHOL**	17	
Undec-1-ene	**1-UNDECENE**	17	
1-UNDECENE		17	
UNDECYL ALCOHOL		17	
Undecylbenzene	**ALKYL(C9+)BENZENES**	17	
Undecylic acid	**UNDECANOIC ACID**	17	
n-Undecylic acid	**UNDECANOIC ACID**	17	
uns-Trimethylbenzene	**TRIMETHYLBENZENE (ALL ISOMERS)**	17	
Urea, ammonia liquor	**UREA/AMMONIUM NITRATE SOLUTION (CONTAINING LESS**	17	
Urea, ammonium carbamate solutions	**UREA/AMMONIUM NITRATE SOLUTION (CONTAINING LESS**	17	
UREA/AMMONIUM NITRATE SOLUTION		17	
UREA/AMMONIUM NITRATE SOLUTION (CONTAINING LESS THAN 1% FREE AMMONIA)		17	
UREA/AMMONIUM PHOSPHATE SOLUTION		17	
UREA SOLUTION		17	

Index Name	Product Name	Chapter	UN No.
Valeral	**VALERALDEHYDE (ALL ISOMERS)**	17	
VALERALDEHYDE (ALL ISOMERS)		17	2058
n-Valeraldehyde	**VALERALDEHYDE (ALL ISOMERS)**	17	
Valerianic acid	**PENTANOIC ACID**	17	
Valeric acid	**PENTANOIC ACID**	17	
n-Valeric acid	**PENTANOIC ACID**	17	
Valeric aldehyde	**VALERALDEHYDE (ALL ISOMERS)**	17	
Valerone	**DIISOBUTYL KETONE**	17	
Varnoline	**WHITE SPIRIT, LOW (15-20%) AROMATIC**	17	
VEGETABLE ACID OILS (M)		17	
VEGETABLE FATTY ACID DISTILLATES (M)		17	
VEGETABLE PROTEIN SOLUTION (HYDROLYSED)		18	
Vinegar acid	**ACETIC ACID**	17	
Vinegar naphtha	**ETHYL ACETATE**	17	
VINYL ACETATE		17	1301
Vinylbenzene	**STYRENE MONOMER**	17	
Vinylcarbinol	**ALLYL ALCOHOL**	17	
Vinyl cyanide	**ACRYLONITRILE**	17	
vinyl ethanoate	**VINYL ACETATE**	17	
VINYL ETHYL ETHER		17	1302
Vinylformic acid	**ACRYLIC ACID**	17	
VINYLIDENE CHLORIDE		17	1303
VINYL NEODECANOATE		17	
VINYLTOLUENE		17	2618
Vinyl trichloride	**1,1,2-TRICHLOROETHANE**	17	
Vinyltrichloride	**1,1,2-TRICHLOROETHANE**	17	
Vitriol brown oil	**OLEUM**	17	
WATER		18	
Water glass	**SODIUM SILICATE SOLUTION**	17	
WAXES		17	
White bole	**KAOLIN SLURRY**	18	
White caustic	**SODIUM HYDROXIDE SOLUTION**	17	
WHITE SPIRIT, LOW (15-20%) AROMATIC		17	1300
White tar	**NAPHTHALENE (MOLTEN)**	17	
Wine	**ALCOHOLIC BEVERAGES, N.O.S.**	18	
Wintergreen oil	**METHYL SALICYLATE**	17	
Wood alcohol	**METHYL ALCOHOL**	17	
Wood naphtha	**METHYL ALCOHOL**	17	
Wood spirit	**METHYL ALCOHOL**	17	
XYLENES		17	1307
XYLENES/ETHYLBENZENE (10% OR MORE) MIXTURE		17	
XYLENOL		17	2261
2,3-Xylenol	**XYLENOL**	17	
2,4-Xylenol	**XYLENOL**	17	
2,5-Xylenol	**XYLENOL**	17	
2,6-Xylenol	**XYLENOL**	17	
3,4-Xylenol	**XYLENOL**	17	
3,5-Xylenol	**XYLENOL**	17	
Xylols	**XYLENES**	17	
ZINC ALKARYL DITHIOPHOSPHATE (C7-C16)		17	

Index Name	Product Name	Chapter	UN No.
ZINC ALKENYL CARBOXAMIDE		17	
ZINC ALKYL DITHIOPHOSPHATE (C3-C14)		17	
Zinc bromide drilling brine	**DRILLING BRINES (CONTAINING ZINC SALTS)**	17	
z-Octadec-9-enamine	**OLEYLAMINE**	17	
(Z)-Octadec-9-enoic acid	**OLEIC ACID**	17	
Z-Octadec-9-enoic acid	**OLEIC ACID**	17	
z-Octadec-9-enylamine	**OLEYLAMINE**	17	
z-1,3-Pentadiene	**1,3-PENTADIENE**	17	

***

ANNEX 6

RESOLUTION MSC.220(82)

(adopted on 8 December 2006)

ADOPTION OF AMENDMENTS TO THE INTERNATIONAL CODE FOR THE CONSTRUCTION AND EQUIPMENT OF SHIPS CARRYING LIQUEFIED GASES IN BULK

THE MARITIME SAFETY COMMITTEE,

RECALLING Article 28(b) of the Convention on the International Maritime Organization concerning the functions of the Committee,

NOTING resolution MSC.5(48), by which it adopted the International Code for the Construction and Equipment of Ships Carrying Liquefied Gases in Bulk (hereinafter referred to as "the IGC Code"), which has become mandatory under chapter VII of the International Convention for the Safety of Life at Sea (SOLAS), 1974 (hereinafter referred to as "the Convention"),

NOTING ALSO article VIII(b) and regulation VII/11.1 of the Convention concerning the procedure for amending the IGC Code,

HAVING CONSIDERED, at its eighty-second session, amendments to the IGC Code proposed and circulated in accordance with article VIII(b)(i) of the Convention,

1. ADOPTS, in accordance with article VIII(b)(iv) of the Convention, amendments to the International Code for the Construction and Equipment of Ships Carrying Liquefied Gases in Bulk, the text of which is set out in the Annex to the present resolution;

2. DETERMINES, in accordance with article VIII(b)(vi)(2)(bb) of the Convention, that the amendments shall be deemed to have been accepted on 1 January 2008 unless, prior to that date, more than one third of the Contracting Governments to the Convention or Contracting Governments the combined merchant fleets of which constitute not less than 50% of the gross tonnage of the world's merchant fleet, have notified their objections to the amendments;

3. INVITES Contracting Governments to note that, in accordance with article VIII(b)(vii)(2) of the Convention, the amendments shall enter into force on 1 July 2008 upon their acceptance in accordance with paragraph 2 above;

4. REQUESTS the Secretary-General, in conformity with article VIII(b)(v) of the Convention, to transmit certified copies of the present resolution and the text of the amendments contained in the Annex to all Contracting Governments to the Convention;

5. FURTHER REQUESTS the Secretary-General to transmit copies of this resolution and its Annex to Members of the Organization, which are not Contracting Governments to the Convention.

ANNEX

AMENDMENTS TO THE INTERNATONAL CODE FOR THE CONSTRUCTION AND EQUIPMENT OF SHIPS CARRYING LIQUEFIED GASES IN BULK

CHAPTER 1
GENERAL

1.3 Definitions

1 In paragraph 1.3.2, the words "regulation II-2/3.3 of the 1983 SOLAS amendments" are replaced by "SOLAS regulation II-2/3.2".

2 Paragraph 1.3.34 is replaced by the following new paragraph 1.3.34:

"1.3.34 "SOLAS" means the International Convention for the Safety of Life at Sea, 1974, as amended."

CHAPTER 3
SHIP ARRANGEMENTS

3.3 Cargo pump-rooms and cargo compressor rooms

3 In paragraph 3.3.1.1, the words "regulation II-2/58 of the 1983 SOLAS amendments" are replaced by "SOLAS regulation II-2/9.2.4".

CHAPTER 11
FIRE PROTECTION AND FIRE EXTINCTION

11.1 Fire safety requirements

4 In paragraph 11.1.1, the words "chapter II-2 of the 1983 SOLAS amendments" are replaced by "SOLAS chapter II-2", and subparagraphs .1 to .3 are replaced by the following new subparagraphs:

".1 regulations 4.5.1.6 and 4.5.10 do not apply;

.2 regulation 10.2 as applicable to cargo ships and regulations 10.4 and 10.5 should apply as they would apply to tankers of 2,000 gross tonnage and over;

.3 regulation 10.5.6 should apply to ships of 2,000 gross tonnage and over;

.4 the following regulations of SOLAS chapter II-2 related to tankers do not apply and are replaced by chapters and sections of the Code as detailed below:

Regulation	Replaced by
10.10	11.6
4.5.1.1 and 4.5.1.2	chapter 3
4.5.5 and 10.8	11.3 and 11.4
10.9	11.5

.5 regulations 13.3.4 and 13.4.3 should apply to ships of 500 gross tonnage and over."

11.2 Fire water main equipment

5 In paragraph 11.2.1, the words "regulations II-2/4 and II-2/7 of the 1983 SOLAS amendments" are replaced by "SOLAS regulations II-2/10.2, 10.4 and 10.5", the words "regulations 4.2.1 and 4.4.1" are replaced by "regulations II-2/10.2.2.4.1 and II-2/10.2.1.3" and "regulation 4.4.2" is replaced by "regulation II-2/10.2.1.6".

6 In paragraph 11.2.2, the words "regulations II-2/4.5.1 and II-2/4.8 of the 1983 SOLAS amendments, with hose lengths not exceeding 33 m" are replaced by "SOLAS regulations II-2/10.2.1.5.1 and II-2/10.2.3.3, with hose lengths as specified in regulation II-2/10.2.3.1.1".

11.5 Cargo compressor and pump-rooms

7 In paragraph 11.5.1, the words "regulation II-2/5.1 and .2 of the 1974 SOLAS Convention, as amended" are replaced by "SOLAS regulation II-2/10.9.1.1", the words "regulation II-2/5.1.6 of the 1983 SOLAS amendments" are replaced by "SOLAS regulation II-2/10.9.1.1.1".

8 In paragraph 11.6, in the heading, the word "Firemen's" is replaced by the word "Fire-fighter's".

9 In paragraph 11.6.1, the word "firemen's" is replaced by the word "fire-fighter's" and the words "regulation II-2/17 of the 1983 SOLAS amendments" are replaced by "SOLAS regulation II-2/10.10".

CHAPTER 12
MECHANICAL VENTILATION IN THE CARGO AREA

10 The words after the heading "The requirements of this chapter should be substituted for regulation II-2/59.3 of the 1983 SOLAS amendments" are replaced by the words "The requirements of this chapter should be substituted for SOLAS regulations II-2/4.5.2.6 and II-2/4.5.4".

CHAPTER 19
SUMMARY OF MINIMUM REQUIREMENTS

11 The following products are added to the table in chapter 19:

a	b	c	d	e	f	g	h	i
Product name	UN number	Ship type	Independent tank type C required	Control of vapour space within cargo tanks	Vapour detection	Gauging	MFAG table No.	Special requirements
Dimethyl ether	-	2G/2PG	-	-	F+T	C	-	
Carbon dioxide	-	3G	Yes	-	-	C	-	

***

ANNEX 7

RESOLUTION MSC.221(82)

(adopted on 8 December 2006)

ADOPTION OF AMENDMENTS TO THE INTERNATIONAL CODE OF SAFETY FOR HIGH-SPEED CRAFT (1994 HSC CODE)

THE MARITIME SAFETY COMMITTEE,

RECALLING Article 28(b) of the Convention on the International Maritime Organization concerning the functions of the Committee,

NOTING resolution MSC.36(63), by which it adopted the International Code of Safety for High-Speed Craft (hereinafter referred to as "the 1994 HSC Code"), which has become mandatory under chapter X of the International Convention for the Safety of Life at Sea (SOLAS), 1974 (hereinafter referred to as "the Convention"),

NOTING ALSO article VIII(b) and regulation X/1.1 of the Convention concerning the procedure for amending the 1994 HSC Code,

HAVING CONSIDERED, at its eighty-second session, amendments to the 1994 HSC Code proposed and circulated in accordance with article VIII(b)(i) of the Convention,

1. ADOPTS, in accordance with article VIII(b)(iv) of the Convention, amendments to the International Code of Safety for High-Speed Craft (1994 HSC Code), the text of which is set out in the Annex to the present resolution;

2. DETERMINES, in accordance with article VIII(b)(vi)(2)(bb) of the Convention, that the amendments shall be deemed to have been accepted on 1 January 2008 unless, prior to that date, more than one third of the Contracting Governments to the Convention or Contracting Governments the combined merchant fleets of which constitute not less than 50% of the gross tonnage of the world's merchant fleet, have notified their objections to the amendments;

3. INVITES Contracting Governments to note that, in accordance with article VIII(b)(vii)(2) of the Convention, the amendments shall enter into force on 1 July 2008 upon their acceptance in accordance with paragraph 2 above;

4. REQUESTS the Secretary-General, in conformity with article VIII(b)(v) of the Convention, to transmit certified copies of the present resolution and the text of the amendments contained in the Annex to all Contracting Governments to the Convention;

5. FURTHER REQUESTS the Secretary-General to transmit copies of this resolution and its Annex to Members of the Organization, which are not Contracting Governments to the Convention.

ANNEX

AMENDMENTS TO THE INTERNATIONAL CODE OF SAFETY FOR HIGH-SPEED CRAFT (1994 HSC CODE)

CHAPTER 1
GENERAL COMMENTS AND REQUIREMENTS

1 The existing paragraph 1.2 is renumbered as paragraph 1.2.1 and the following new paragraph 1.2.2 is added:

"1.2.2 New installation of materials containing asbestos used for the structure, machinery, electrical installations and equipment of a craft to which this Code applies should be prohibited except for:

.1 vanes used in rotary vane compressors and rotary vane vacuum pumps;

.2 watertight joints and linings used for the circulation of fluids when, at high temperature (in excess of 350°C) or pressure (in excess of 7×10^6 Pa), there is a risk of fire, corrosion or toxicity; and

.3 supple and flexible thermal insulation assemblies used for temperatures above 1000°C."

CHAPTER 8
LIFE-SAVING APPLIANCES AND ARRANGEMENTS

2 The following new paragraph 8.9.7.2 is inserted after the existing paragraph 8.9.7.1.2:

"8.9.7.2 In addition to, or in conjunction with, the servicing intervals of marine evacuation systems (MES) required above, each marine evacuation system should be deployed from the craft on a rotational basis at intervals to be agreed by the Administration provided that each system is to be deployed at least once every six years."

3 The heading "Operational readiness" in paragraph 8.9.1 is deleted and replaced by the word "General". The existing paragraph 8.9.1 is renumbered as paragraph 8.9.1.1 and the following paragraphs 8.9.1.2 and 8.9.1.3 with associated footnote are inserted:

"8.9.1.2 Before giving approval to novel life-saving appliances or arrangements, the Administration should ensure that such appliances or arrangements:

.1 provide safety standards at least equivalent to the requirements of this chapter and have been evaluated and tested in accordance with the recommendations of the Organization;* or

.2 have successfully undergone, to the satisfaction of the Administration, evaluation and tests which are substantially equivalent to those recommendations.

8.9.1.3 An Administration which permits extension of liferaft service intervals in accordance with 8.9.1.2 should notify the Organization in accordance with regulation I/5(b) of the Convention.

---

* Refer to the Code of Practice for the Evaluation, Testing and Acceptance of Prototype Novel Life-Saving Appliances and Arrangements, adopted by the Organization by resolution A.520(13)."

4 The following new paragraph 8.9.10 with heading "Periodic servicing of launching appliances" is inserted after the existing paragraph 8.9.9:

"8.9.10 *Periodic servicing of launching appliances*

Launching appliances:

.1 should be serviced at recommended intervals in accordance with instructions for on-board maintenance as required by regulation III/36 of the Convention;

.2 should be subjected to a thorough examination at the annual surveys required by paragraph 1.5.1.3; and

.3 should, upon completion of the examination in .2 above, be subjected to a dynamic test of the winch brake at maximum lowering speed. The load to be applied should be the mass of the survival craft or rescue boat without persons on board, except that, at intervals not exceeding 5 years, the test should be carried out with a proof load equal to 1.1 times the weight of the survival craft or rescue boat and its full complement of persons and equipment."

5 The following new paragraph 8.9.11 with heading "Novel life-saving appliances or arrangements" is inserted after the existing paragraph 8.9.10:

"8.9.11 *Novel life-saving appliances or arrangements*

An Administration which approves new and novel inflatable liferaft arrangements pursuant to 8.9.1.2 may allow for extended servicing intervals under the following conditions:

.1 the new and novel liferaft arrangement should maintain the same standard, as required by testing procedures, throughout the extended servicing intervals;

.2 the liferaft system should be checked on board by certified personnel according to 8.7; and

.3 service at intervals not exceeding five years should be carried out in accordance with the recommendations of the Organization."

6 The following new paragraph 8.9.12 with associated footnote is inserted after the existing paragraph 8.9.11:

"8.9.12 An Administration which permits extension of liferaft service intervals in accordance with 8.9.11 should notify the Organization in accordance with regulation I/5(b) of the Convention.*

* Refer to the Code of Practice for the Evaluation, Testing and Acceptance of Prototype Novel Life-Saving Appliances and Arrangements, adopted by the Organization by resolution A.520(13)."

CHAPTER 13
NAVIGATIONAL EQUIPMENT

7 Existing paragraph 13.14.2 is renumbered as paragraph 13.14.3 and the following new paragraph 13.14.2 is inserted:

"13.14.2 All craft, including existing craft, should be fitted with an ECDIS not later than 1 July 2010."

CHAPTER 14
RADIOCOMMUNICATIONS

8 The existing text of paragraph 14.1 is replaced by the following:

"14.1 Craft should be provided with radiocommunications facilities as specified in chapter 14 of the 2000 HSC Code (resolution MSC.97(73)), as amended up to and including resolution MSC.222(82), that are fitted and operated in accordance with the provisions of that chapter."

ANNEX 1
FORM OF HIGH–SPEED CRAFT SAFETY CERTIFICATE

9 In the Record of Equipment for High-Speed Craft Safety Certificate, in section 5, the following new item 14 is inserted after the existing item 13 and the existing item 14 is renumbered as item 15.

"14 Long-range identification and tracking system"

ANNEX 7
STABILITY OF MULTIHULL CRAFT

10 The references to "2.9" in paragraph 1.4.1 and to "2.4" in paragraph 2.5 are replaced by the references to "2.10" and "2.6" respectively.

***

ANNEX 8

RESOLUTION MSC.222(82)

(adopted on 8 December 2006)

ADOPTION OF AMENDMENTS TO THE INTERNATIONAL CODE OF SAFETY FOR HIGH-SPEED CRAFT, 2000

THE MARITIME SAFETY COMMITTEE,

RECALLING Article 28(b) of the Convention on the International Maritime Organization concerning the functions of the Committee,

NOTING resolution MSC.97(73), by which it adopted the International Code of Safety for High-Speed Craft, 2000 (hereinafter referred to as "the 2000 HSC Code"), which has become mandatory under chapter X of the International Convention for the Safety of Life at Sea (SOLAS), 1974, (hereinafter referred to as "the Convention"),

NOTING ALSO article VIII(b) and regulation X/1.2 of the Convention concerning the procedure for amending the 2000 HSC Code,

HAVING CONSIDERED, at its eighty-second session, amendments to the 2000 HSC Code proposed and circulated in accordance with article VIII(b)(i) of the Convention,

1. ADOPTS, in accordance with article VIII(b)(iv) of the Convention, amendments to the International Code of Safety for High-Speed Craft, 2000, the text of which is set out in the Annex to the present resolution;

2. DETERMINES, in accordance with article VIII(b)(vi)(2)(bb) of the Convention, that the amendments shall be deemed to have been accepted on 1 January 2008 unless, prior to that date, more than one third of the Contracting Governments to the Convention or Contracting Governments the combined merchant fleets of which constitute not less than 50% of the gross tonnage of the world's merchant fleet, have notified their objections to the amendments;

3. INVITES Contracting Governments to note that, in accordance with article VIII(b)(vii)(2) of the Convention, the amendments shall enter into force on 1 July 2008 upon their acceptance in accordance with paragraph 2 above;

4. REQUESTS the Secretary-General, in conformity with article VIII(b)(v) of the Convention, to transmit certified copies of the present resolution and the text of the amendments contained in the Annex to all Contracting Governments to the Convention;

5. FURTHER REQUESTS the Secretary-General to transmit copies of this resolution and its Annex to Members of the Organization, which are not Contracting Governments to the Convention.

ANNEX*

AMENDMENTS TO THE INTERNATIONAL CODE OF SAFETY FOR HIGH-SPEED CRAFT, 2000

CHAPTER 1
GENERAL COMMENT AND REQUIREMENTS

1 The existing text of section 1.2 is renumbered as paragraph 1.2.1 and the following paragraph 1.2.2 is added:

"1.2.2 On all craft, new installation of materials containing asbestos used for the structure, machinery, electrical installations and equipment of a craft to which this Code applies shall be prohibited except for:

.1 vanes used in rotary vane compressors and rotary vane vacuum pumps;

.2 watertight joints and linings used for the circulation of fluids when, at high temperature (in excess of 350°C) or pressure (in excess of 7 x 10^6 Pa), there is a risk of fire, corrosion or toxicity; and

.3 supple and flexible thermal insulation assemblies used for temperatures above 1000°C."

2 In paragraph 1.3.4.1, the words "operational speed" are replaced by the words "90% of maximum speed".

3 In paragraph 1.3.4.2, the words "operational speed" are replaced by the words "90% of maximum speed".

4 In paragraph 1.4.16, the words "(main displays and controls for equipment specified in 13.2 to 13.7)" are inserted after the words "navigating equipment".

5 In paragraph 1.4.29, the word "food" is inserted between the words "cooking or" and "heating".

6 The existing paragraph 1.4.35 is replaced by the following:

"1.4.35 *Machinery spaces* are spaces containing internal combustion engines either used for main propulsion or having an aggregate total power output of more than 110 kW, generators, oil fuel units, major electrical machinery and similar spaces and trunks to such spaces."

7 The existing paragraph 1.4.44 is deleted and the existing paragraphs 1.4.32 to 1.4.43 are renumbered as paragraphs 1.4.33 to 1.4.44, with a new paragraph 1.4.32 being inserted as follows:

* The annex also contains at the end a list of footnotes to be added or to be amended in the 2000 HSC Code.

"1.4.32 *IMDG Code* means the International Maritime Dangerous Goods (IMDG) Code as defined in chapter VII of the Convention."

8 At end of paragraph 1.4.53, the following new sentence is inserted:

"Such spaces containing no cooking appliances may contain:

.1 coffee automats, toasters, dish washers, microwave ovens, water boilers and similar appliances, each of them with a maximum power of 5 kW; and

.2 electrically heated cooking plates and hot plates for keeping food warm, each of them with a maximum power of 2 kW and a surface temperature not above 150°C."

9 In paragraph 1.4.54, the text after "the average" is replaced by the following:

"crest-to-trough height of the highest one third of the zero-upcrossing waves in a specified period."

10 At end of paragraph 1.8.1, the following text is inserted:

"On all craft, all certificates issued under this chapter, or certified copies thereof, shall be carried on the craft. Except where the flag State is a Party to the 1988 SOLAS Protocol, a copy of each of these certificates shall be posted up in a prominent and accessible place in the craft."

11 In paragraph 1.9.1, the second sentence is deleted and the following new paragraph 1.9.1.1 is inserted:

"1.9.1.1 On all craft, transit voyages may be undertaken without a valid Permit to Operate High-Speed Craft provided the craft is not operating commercially with passengers or cargo onboard. For the purpose of this provision, these transit voyages include delivery voyages, i.e., builder's port to base port, and voyages for repositioning purposes, i.e., change of base port and/or route. Such transit voyages in excess of the limits set out in this Code may be undertaken provided that:

.1 the craft has a valid High-Speed Craft Safety Certificate or similar before the start of such a voyage;

.2 the operator has developed a safety plan for the voyage including any temporary accommodation and all relevant matters listed in 18.1.3 to ensure that the craft is capable of safely completing the transit voyage;

.3 the master of the craft is provided with the materials and information necessary to operate the craft safely during the transit voyage; and

.4 the Administration is satisfied that arrangements have been made for the safe conduct of the voyage."

12 The following new paragraph 1.9.7 is added after the existing paragraph 1.9.6:

"1.9.7 In determining the worst intended conditions and the operational limitations on all craft for insertion in the Permit to Operate, the Administration shall give consideration to all the parameters listed in annex 12. The limitations assigned shall be those that enable compliance with all of these factors."

13 In paragraph 1.15.1, the words "four years" are replaced by the words "six years".

CHAPTER 2
BUOYANCY, STABILITY AND SUBDIVISION

14 The existing text of subparagraph .1 of paragraph 2.1.3 is replaced by the following:

".1 *Downflooding point* means any opening, irrespective of size, that would permit passage of water through a water/weathertight structure (e.g., opening windows), but excludes any opening kept closed to an appropriate standard of water/weathertightness at all times other than when required for access or for operation of portable submersible bilge pumps in an emergency (e.g., non-opening windows of similar strength and weathertight integrity to the structure in which they are installed)."

15 In paragraph 2.1.3, subparagraphs .2 to .6 are renumbered as subparagraphs .3 to .7 and the following new subparagraph .2 is inserted after the existing subparagraph .1:

".2 *Elsewhere* when applied to sill and coaming heights in 2.2.7 and 2.2.8 is taken as applying to all weathertight and watertight closures located on or below the datum."

16 The following new paragraph 2.1.5 is inserted and the existing paragraphs 2.1.5 and 2.1.6 are renumbered as paragraphs 2.1.6 and 2.1.7:

"2.1.5 The adequacy of mathematical simulations must first be demonstrated by correlation with full-scale or model tests for the appropriate type of craft. It may be appropriate to use mathematical simulations to help to identify the more critical scenarios for subsequent physical testing.* "

* Some mathematical simulation methods are not well suited to accurate modelling of extreme events. For safety level 3 or 4, it may be appropriate to use model testing as a precursor to, or instead of, full-scale testing.

17 The following text is inserted at the end of paragraph 2.1.7:

"Where calculations are employed, it shall first be shown that they correctly represent dynamic behaviour within the operational limitations of the craft."

18 The third and subsequent sentences of paragraph 2.2.9.3 are replaced by the following:

"In unmanned machinery spaces, main and auxiliary sea inlet and discharge controls in connection with the operation of machinery shall either:

.1 be located at least 50% of the significant wave height corresponding to the worst intended conditions above the deepest flooded waterline following damage specified in 2.6.6 to 2.6.10; or

.2 be operable from the operating compartment."

19 In paragraph 2.3.4, the content of table 2.3.4 is replaced by the following:

"Table 2.3.4 – Application of annexes 7 and 8 to monohull and multihull craft

GM_T	Angle of maximum GZ	
	≤ 25º	> 25º
≤ 3 m	annex 7 or annex 8	annex 8
> 3 m	annex 7	annex 7 or annex 8

"

20 In paragraph 2.3.4, the definitions of B_{WL}, A_{WP} *and* ∇ which appear after "where:" are deleted and the definition "GZ = righting lever" is inserted to replace them.

21 In paragraph 2.4.2, the words "chapter 18" are replaced by the words "chapters 17 and 18".

22 In paragraph 2.6.5, the following new subparagraph .5 is inserted after the existing subparagraph .4:

".5 void spaces filled with foam or modular buoyancy elements or any space without a venting system are considered to be void spaces for the purposes of this paragraph, provided such foam or elements fully comply with 2.6.4."

23 In paragraph 2.6.6, the final sentence is deleted.

24 The following new section of text is added in continuation of paragraph 2.6.7 after subparagraph 2.6.7.3:

"The damages described in this paragraph shall be assumed to have the shape of a parallelepiped.* Applying this to figure 2.6.7 a, the inboard face at its mid-length shall be tangential to, or otherwise touching in a least 2 places, the surface corresponding to the specified transverse extent of penetration, as illustrated in figure 2.6.7 a.

Side damage shall not transversely penetrate a greater distance than the extent of $0.2\nabla^{1/3}$ at the design waterline, except where a lesser extent is provided for in 2.6.7.2. Refer to figures 2.6.7b and c.

* A parallelepiped is defined as "a solid contained by parallelograms" and a parallelogram is defined as "a four-sided rectilinear figure whose opposite sides are parallel".

If considering a multihull, the periphery of the craft is considered to only be the surface of the shell encompassed by the outboard surface of the outermost hull at any given section.

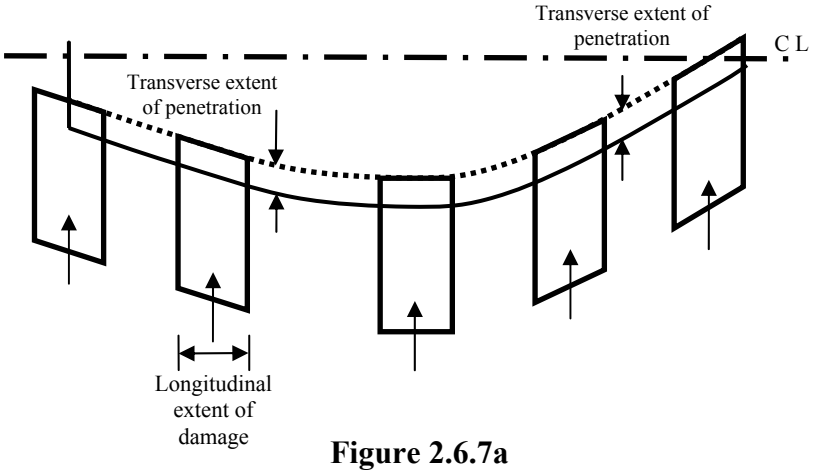

Figure 2.6.7a

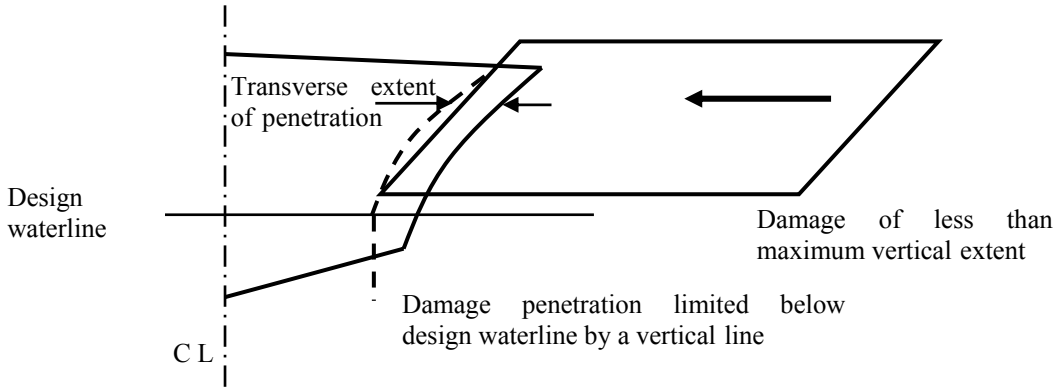

Figure 2.6.7 b

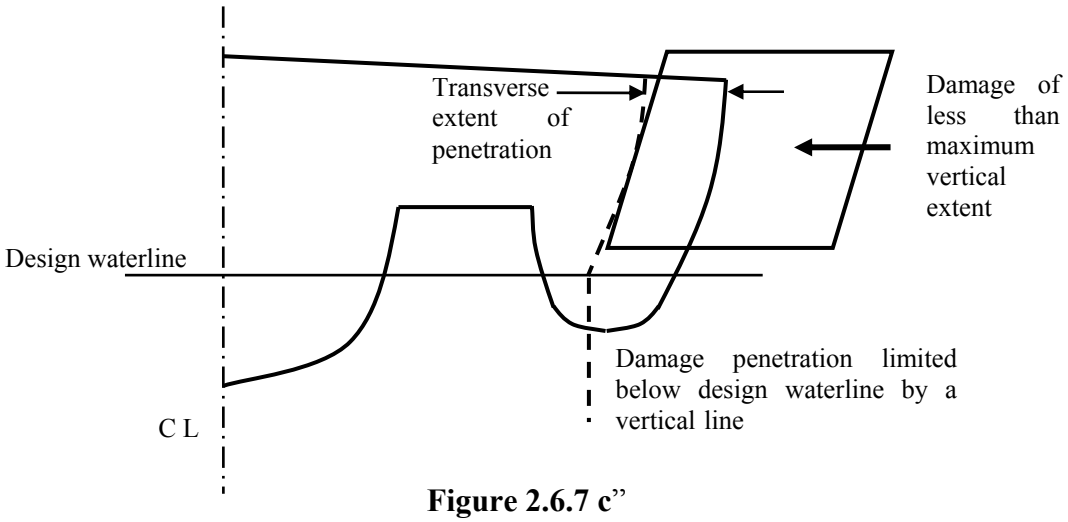

Figure 2.6.7 c”

25 In paragraph 2.6.7, the word "damages" is replaced by the word "damage".

26 Existing paragraphs 2.6.8 to 2.6.12 are renumbered as paragraphs 2.6.9 to 2.6.13 and the following new paragraph 2.6.8 is inserted after the existing paragraph 2.6.7:

"2.6.8 *Extent of bow and stern damage*

2.6.8.1 The following extents of damage are to be applied to bow and stern, as illustrated in figure 2.6.8:

.1 at the fore end, damage to the area defined as A_{bow} in 4.4.1, the aft limit of which being a transverse vertical plane, provided that this area need not extend further aft from the forward extremity of the craft's watertight envelope than the distance defined in 2.6.7.1; and

.2 at the aft end, damage to the area aft of a transverse vertical plane at a distance $0.2\nabla^{1/3}$ forward of the aft extremity of the watertight envelope of the hull.

2.6.8.2 The provisions of 2.6.6 in relation to damage of lesser extent remain applicable to such damage.

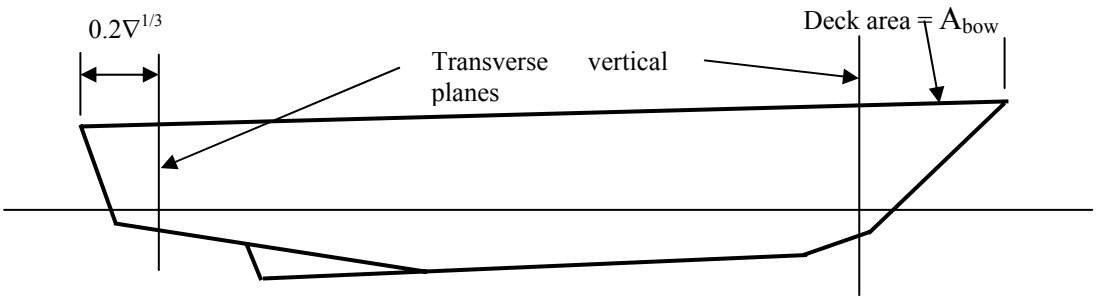

Figure 2.6.8"

27 In paragraph 2.6.9.1.1.1, the words "operational speed" are replaced by the words "90% of maximum speed".

28 In paragraph 2.6.9.1.2, the following text is inserted at the end of the definition of "T":

", provided that structures such as single plate skegs or solid metal appendages shall be considered to be non-buoyant and thus excluded."

29 The following new paragraph 2.6.9.2.3 is inserted after the existing paragraph 2.6.9.2.2:

"2.6.9.2.3 The shape of damage shall be assumed to be rectangular in the transverse plane as illustrated in figure 2.6.9.2 below. Damage is to be assumed at a series of sections within the defined longitudinal extent in accordance with figure 2.6.9.2, the mid-point of the damaged girth being maintained at a constant distance from the centreline throughout that longitudinal extent.

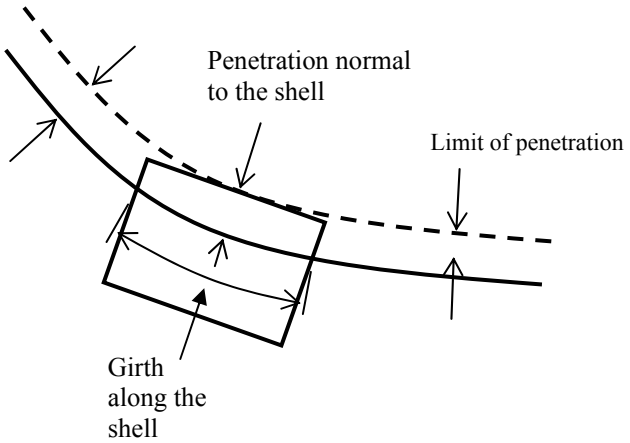

Figure 2.6.9.2"

30 In paragraph 2.6.10.1, the words "below the design waterline" are inserted between the words "hull(s)" and "which".

31 In paragraph 2.6.10.2, the following new subparagraph .4 is inserted after the existing subparagraph .3:

".4 the shape of damage shall be assumed to be rectangular in the plane of the shell of the craft, and rectangular in the transverse plane as illustrated in figure 2.6.9.2."

32 The existing paragraphs 2.7.2 to 2.7.8 are renumbered as paragraphs 2.7.3 to 2.7.9 and the following new paragraph 2.7.2 is inserted after the existing paragraph 2.7.1:

"2.7.2 On all craft, where an accurate inclining experiment is impractical owing to the height of the centre of gravity (VCG or KG) being less than one third of the transverse metacentric height (GM_T), the Administration may accept estimation of KG by detailed calculation in place of an inclining experiment. In such cases, a displacement check shall be undertaken to confirm the calculated lightship characteristics, including LCG, which may be accepted if the measured lightship displacement and LCG are respectively within 2% and 1% L relative to the estimate."

33 In paragraph 2.7.7, the following new sentence is inserted at the end of the paragraph:

"For amphibious air-cushion vehicles this may be achieved by the use of draught gauges in conjunction with deck datum plates."

34 In paragraph 2.10, the following new subparagraphs .7 to .10 are inserted after the existing subparagraph .6:

".7 Passengers assumed to be occupying seats shall be taken as having a vertical centre of gravity corresponding to being seated, with all others standing.

.8 On the decks where assembly stations are located, the number of passengers on each deck shall be that which generates the maximum heeling moment. Any remaining passengers shall be assumed to occupy decks adjacent to those on which the assembly stations are located, and positioned such that the combination

of number on each deck and total heeling moment generate the maximum static heel angle.

.9 Passengers shall not be assumed to gain access to the weather deck nor be assumed to crowd abnormally towards either end of the craft unless this is a necessary part of the planned evacuation procedure.

.10 Where there are seats in areas occupied by passengers, one passenger per seat shall be assumed, passengers being assigned to the remaining free areas of the deck (including stairways, if appropriate) at the rate of four per square metre."

35 The following new paragraph 2.12.3 is inserted after the existing paragraph 2.12.2:

"2.12.3 Demonstrating the effect of the passenger heeling moment calculated as given by 2.10 above, or a defined beam wind pressure when at speed, shall be established by conducting a trial or model test with an equivalent heeling moment applied by test weights. Passenger movement may only be neglected on craft where the safety announcement (refer to 8.4.1 and 18.7) expressly requires passengers to remain seated throughout the voyage."

CHAPTER 4
ACCOMMODATION AND ESCAPE MEASURES

36 In paragraph 4.3.4, the words "two thirds of operational speed" are replaced by the words "60% of maximum speed".

37 In paragraph 4.3.7, the words "operational speed" are replaced by the words "90% of maximum speed".

38 In paragraph 4.4.1, the words "operational speed" are replaced by the words "90% of maximum speed".

39 In table 4.4.2, under Design Level 2:

.1 the existing text of paragraph 1.1 is replaced by the following:

"1.1 Seatbacks with protective deformation and padding."; and

.2 the text "unless satisfactorily tested without belts in that orientation and arrangement" is inserted at the end of paragraph 1.4.

40 The following new sentence is inserted at the end of paragraph 4.4.5:

"The armrests and backrests of seats in public spaces may serve as handholds."

41 In paragraph 4.6.1, the reference to "3g" is replaced by the reference to "3".

42 In paragraph 4.7.10, the second sentence is replaced by the following:

"Clear markings, including the location of the fire control plan, shall be provided for the guidance of rescue personnel outside the craft."

43 In paragraph 4.7.12, the following text is added at the end of the paragraph:

"Doors providing escape from a space shall, where possible, be situated at opposite ends of the space. Where the doors providing escape from a space are situated in the same end of the space, the distance between those doors shall be greater than the maximum length of the space."

44 In paragraph 4.7.13, the following text is added at the end of the paragraph:

"Requirements of this paragraph do not apply to aisles (fore-aft passageways separating seating areas) or to spaces between adjacent rows of seats. However, the width of aisles and the seat pitch shall be such as to allow the craft to comply with the provisions of 4.8."

45 The existing paragraphs 4.7.14 to 4.7.16 are renumbered as paragraphs 4.7.15 to 4.7.17 respectively, and the following new paragraph 4.7.14 is inserted:

"4.7.14 Special category spaces used for stowage of motor vehicles shall be provided with walkways having a width of at least 600 mm leading to a safe means of escape."

46 In paragraph 4.7.17, the following new sentence is added at the end of the paragraph:

"At least one means of escape from a machinery space shall consist of either a ladder leading to a door or hatch (not being a horizontal flush-hatch) or a door located in the lower part of that space and giving access to an adjacent compartment from which a safe means of escape is provided."

47 The following new paragraph 4.7.18 is inserted after the existing paragraph 4.7.17:

"4.7.18 Spaces that are only entered occasionally by crew members may have only one means of escape provided that it is independent of watertight doors."

48 In paragraph 4.8.1, the following new sentence is added at the end of the paragraph:

"In determining the evacuation time, all means of escape are to be considered serviceable and they need not be dimensioned to take into account any additional number of persons that might be diverted from other means of escape if one or more of those other means of escape are lost or rendered unserviceable."

49 The existing paragraphs 4.8.10 and 4.8.11 are renumbered as paragraphs 4.8.11 and 4.8.12 and the following new paragraph 4.8.10 inserted:

"4.8.10 Where the Administration is satisfied that the evacuation time determined in accordance with 4.8.1 to 4.8.9 can thereby be accurately estimated, the Administration may accept an evacuation demonstration in which persons are not required to descend through MES or equivalent means of evacuation, provided the time required to embark into the survival craft can be determined using:

.1 data obtained from the type-approval tests of the equipment, increased by a factor based on the guidelines developed by the Organization; or

.2 time extrapolated from trials using a limited number of participants."

---

* Refer to the Guidelines for a simplified evacuation analysis of high-speed passenger craft (MSC/Circ.1166), in particular paragraph 3.5.1 thereof.

CHAPTER 6
ANCHORING, TOWING AND BERTHING

50 The following new paragraph 6.1.4 is inserted after the existing paragraph 6.1.3:

"6.1.4 Under any operating load up to the breaking strength of the anchor cable or mooring lines, the loads on the bitts, bollards, etc., shall not result in damage to the hull structure that will impair its watertight integrity. A strength margin of at least 20% above the resultant load based on the minimum specified breaking strength of the relevant cable or warp shall be required."

CHAPTER 7
FIRE SAFETY

51 In paragraph 7.3.1.2, in the first bullet point, the reference to "1.4.4" is replaced by the reference to "1.4.5".

52 In paragraph 7.3.1.3, in the first bullet point, the reference to "1.4.5" is replaced by the reference to "1.4.6".

53 In paragraph 7.3.1.4, the words "as defined in 1.4.15" are replaced by the words "as defined in 1.4.16".

54 The existing paragraph 7.3.2 is renumbered as paragraph 7.3.3 and the following new paragraph 7.3.2 is inserted:

"7.3.2 In relation to the classification of spaces in 7.3.1, the following additional criteria shall be applied:

.1 If a space is divided by partial bulkheads into two (or more) smaller areas such that they form enclosed spaces, then the enclosed spaces shall be surrounded by bulkheads and decks in accordance with tables 7.4-1 and 7.4-2, as applicable. However, if the separating bulkheads of such spaces are at least 30% open, then the spaces may be considered as the same space.

.2 Cabinets having a deck area of less than 2 m^2 may be accepted as part of the space they serve, provided they have open ventilation to the space and do not contain any material or equipment that could be a fire risk.

.3 Where a space has the special characteristics of two or more space groupings, the structural fire protection time of the divisions shall be the highest for the space groupings concerned. For example, the structural fire protection time of the divisions of emergency generator rooms shall be of the highest value for the space when the space is considered as being a control station (D) and a machinery space (A).”

55 The following new paragraphs 7.3.4 to 7.3.6 and associated figures 7.3.4a, 7.3.4b and 7.3.6 are inserted after the existing paragraph 7.3.3:

“7.3.4 To prevent heat transmission at intersections and terminal points, the insulation of the deck or bulkhead shall be carried past the intersection or terminal point for a distance of at least 450 mm in the case of steel or aluminium structures (refer to figures 7.3.4a and 7.3.4b).

7.3.5 If a space is divided by a deck or bulkhead and the fire insulation required for each space is different, the insulation with the higher structural fire protection time shall continue on the deck or bulkhead with the insulation of the lesser structural fire protection time for a distance of at least 450 mm beyond the boundary between the spaces.

7.3.6 Where the lower part of the fire insulation has to be cut for drainage, the construction shall be in accordance with the structural details shown in figure 7.3.6.”

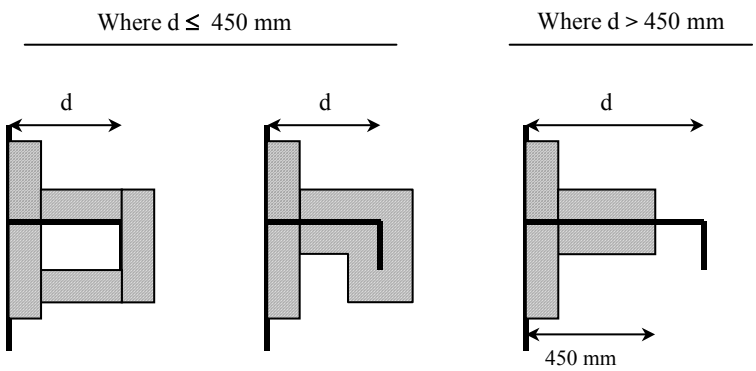

d = depth of stiffener on girder

Figure 7.3.4a

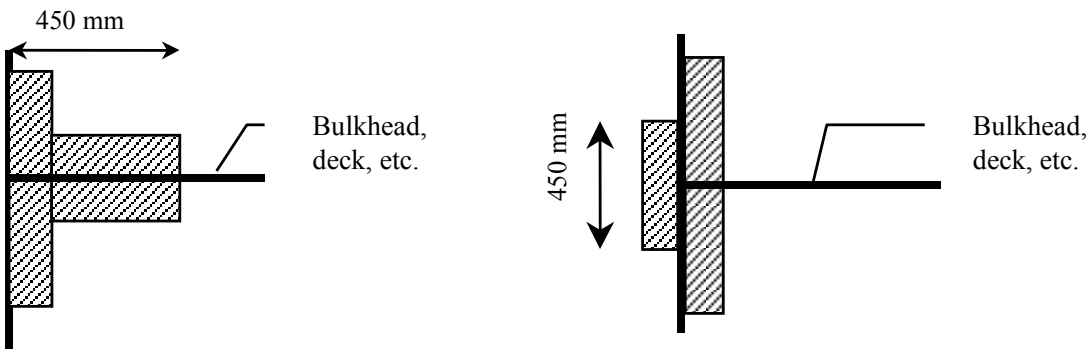

Figure 7.3.4b

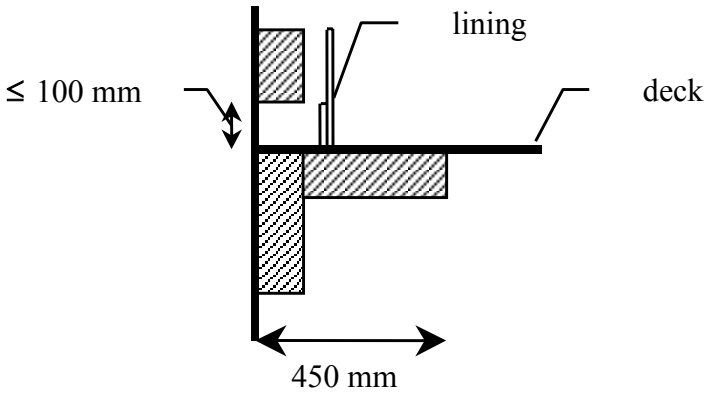

Figure 7.3.6

56 The following new paragraph 7.4.1.4 is inserted after the existing paragraph 7.4.1.3:

"7.4.1.4 Paragraph 7.4.1.3 does not apply to appendages such as air propellers, air ducts to propellers, transmission shafts, rudders and other control surfaces, struts, spars, flexible skirts, etc., which do not comprise part of the main structure of the craft."

57 In tables 7.4-1 and 7.4-2, note 1 is replaced by the following:

"1 The upper side of decks within spaces protected by fixed fire-extinguishing systems need not be insulated."

58 In paragraph 7.4.2.1, in the second sentence, the words "at the lightweight condition" are replaced by the words "at least 300 mm below the craft's waterline in the lightweight condition in displacement mode".

59 At the end of paragraph 7.4.2.6, the following new sentence is added:

"Where machinery shafts penetrate fire-resisting watertight divisions, arrangements shall be made to ensure that the required watertight and fire-resisting integrity of the division is not impaired."

60 The following new paragraph 7.4.2.7 is inserted after the existing paragraph 7.4.2.6:

"7.4.2.7 Ventilation openings may be accepted in entrance doors to public toilets, provided they are positioned in the lower portion of the door and fitted with closable grilles made of non-combustible or fire-restricting material and operable from outside the space."

61 At the end of paragraph 7.4.3.2, the following sentence is added:

"The fire insulation in such spaces may be covered by metal sheets (not perforated) or by vapour proof glass cloth sealed at joints."

62 In paragraph 7.4.3.3.1, the words "e.g., desks, wardrobes, dressing tables, bureaux and dressers" are inserted after the words "case furniture".

63 In paragraph 7.4.3.4, the words "Subject to 7.4.3.5" are inserted at the beginning of the paragraph.

64 The following new paragraph 7.4.3.5 is inserted after the existing paragraph 7.4.3.4 and the existing paragraphs 7.4.3.5 to 7.4.3.10 are renumbered as paragraphs 7.4.3.6 to 7.4.3.11:

> "7.4.3.5 Paragraph 7.4.3.4 does not apply to partitions, windows and sidescuttles made of glass which are deemed to be non-combustible and to comply with the requirements for low-flame spread surfaces or to items and materials referred to in 7.4.3.3*."

* Refer to paragraph 7.9.3.4 and the FTP Code, annex 2, paragraphs 1 and 5.1.

65 The last sentence of paragraph 7.4.4.1 is deleted.

66 The following new paragraph 7.4.4.2 is added after the existing paragraph 7.4.4.1 and the existing paragraphs 7.4.4.2 and 7.4.4.3 are renumbered as paragraphs 7.4.4.3 and 7.4.4.4:

> "7.4.4.2 Open stairways may be fitted in public spaces consisting of only two decks, provided the stairways lie wholly within such public spaces and the following conditions are met:
>
> .1 all levels are used for the same purpose;
>
> .2 the area of the opening between the lower and upper parts of the space is at least 10% of the deck area between the upper and lower parts of the space;
>
> .3 the design is such that persons within the space should be generally aware, or could easily be made aware of, a developing fire or other hazardous situation located within that space;
>
> .4 sufficient means of escape are provided from both levels of the space directly leading to an adjacent safe area or compartment; and
>
> .5 the whole space is served by one section of the sprinkler system."

67 The second sentence of paragraph 7.4.4.4 is replaced by the following:

> "Draught stops are not required in public spaces of category A craft having only one public space and on other craft in spaces with open ceilings (perforated ceilings) where the opening is 40% or more and the ceiling is arranged in such a way that a fire behind the ceiling can be easily seen and extinguished."

68 The following sentence is added at the end of paragraph 7.5.2:

> "The use of aluminium in lubricating oil sump tanks for engines, or in lubricating oil filter housings fitted integral with the engines, is accepted."

69 In paragraph 7.6.1, the following sentence is inserted between the two existing sentences:

"The controls shall be easily accessible as well as prominently and permanently marked and shall indicate whether the shut-off is open or closed."

70 In paragraph 7.6.3.2, the words "(the junction between the duct and the galley range hood)" are inserted after the words "lower end of the duct".

71 In paragraph 7.6.3.4, the word "means" is replaced by the words "a remote means located with the above controls".

72 The following sentence is added at the end of the existing paragraph 7.6.3.5:

"At minimum, one hatch shall be provided close to the exhaust fan and others located in areas of high grease accumulation such as the lower end of the duct as referred to in 7.6.3.2."

73 The following text is added at the end of the existing paragraph 7.6.4:

"Fire and smoke dampers shall be arranged so as to be readily accessible. Where placed behind ceilings or linings, they shall be provided with an inspection door marked to identify the damper. Such identification shall also be placed on any required remote controls."

74 In paragraph 7.6.6, the following sentence is inserted before the last sentence:

"Manual closing may be achieved by mechanical means of release or by remote operation of the fire or smoke damper by means of a fail-safe electrical switch or pneumatic release (i.e. spring-loaded, etc.)."

75 In paragraph 7.7.1, the following sentence is inserted after the first sentence:

"Control stations not normally occupied (e.g., emergency generator rooms) need not be provided with manually operated call points."

76 In paragraph 7.7.1.1.4, the words ", each of which shall comprise a group of fire detectors and manually operated call points as displayed at the indicating unit(s) required by this paragraph" are added at the end of the first sentence.

77 In paragraph 7.7.1.1.9, in the first sentence, the text after "7.11.1" is deleted and a new sentence is added at the end of the paragraph as follows:

"Notwithstanding the preceding requirements of this paragraph, the Administration may accept that the same section of detectors can serve spaces on more than one deck if such spaces are located in the fore or aft end of the craft or they are so arranged that they constitute common spaces on different decks (e.g., fan rooms, galleys, public spaces, etc.)."

78 The following sentence is added at the end of paragraph 7.7.1.1.10:

"In the case of a fire detection system with remotely and individually identifiable fire detectors, this requirement is met if no machinery spaces of a major fire hazard are included in a loop (electrical circuit linking detectors of various sections in a sequence

and connected (input and output) to the indicating unit(s)) covering accommodation spaces, service spaces and control stations."

79 In paragraph 7.7.1.1.14, the text following the words "except that" is replaced by the following:

"the control panel may be used to activate one or more of the following:

.1 paging system;

.2 fan stops;

.3 closure of fire doors;

.4 closure of fire and smoke dampers; and

.5 sprinkler system."

80 In paragraph 7.7.1.1.15, the text of the chapeau is replaced by the following:

"Fire detection systems in which all fire detectors are individually identifiable (i.e. having zone address identification capability) shall be so arranged that:"

81 In paragraph 7.7.1.1.15.1, the following words are added at the end of the paragraph:

"and no loop shall pass through a space twice. When this is not practical (e.g., for large public spaces), the part of the loop which by necessity passes through the space for a second time shall be installed at the maximum possible distance from the other parts of the loop."

82 In paragraph 7.7.1.1.15.2, the word "not" is inserted between the words "shall" and "render".

83 The following new paragraph 7.7.1.1.16 is inserted after the existing paragraph 7.7.1.1.15:

"The fire detection system in vehicle deck spaces, excluding manual call points, may be switched off with a timer during loading/unloading of vehicles."

84 The last sentence of paragraph 7.7.1.2.3 is replaced by the following:

"Detectors which are located in the overhead shall be a minimum distance of 0.5 m away from bulkheads, except in corridors, lockers and stairways."

85 In the first sentence of paragraph 7.7.3.1, the words "operating compartment and, where provided, from a" are inserted between the words "the" and "control".

86 The following new paragraph 7.7.3.2 is inserted after the existing paragraph 7.7.3.1 and the existing paragraphs 7.7.3.2 and 7.7.3.3 are renumbered as paragraphs 7.7.3.3 and 7.7.3.4:

"Additional fixed fire-extinguishing systems not required by the Code, but fitted to the craft are to meet the design requirements of this Code, except for the second discharge required for fixed gas fire-extinguishing systems."

87 In paragraph 7.7.3.3.3, the following text is added after the first sentence:

"Pipelines may pass through accommodation spaces, provided they are of substantial thickness and their tightness is verified with a pressure test, after their installation, at a pressure head not less than 5 N/mm^2. In addition, pipelines passing through accommodation areas shall only be joined by welding and shall not be fitted with drains or other openings within such spaces. Pipelines shall not pass through refrigerated spaces."

88 The following sentence is added at the end of paragraph 7.7.3.3.5:

"Openings that may admit air to, or allow gas to escape from, a protected space shall be capable of being closed from outside the protected space."

89 The following text is added at the end of paragraph 7.7.3.3.6:

"corresponding to the gross volume of the machinery space being increased by the volume of air receivers converted to free air volume. Alternatively, a discharge pipe connected to a safety valve may be fitted to each air receiver, provided it leads directly to the open air."

90 In paragraph 7.7.3.3.7, the words "which personnel can be expected to enter (e.g., ro-ro spaces) and where their access is facilitated by doors or hatches or" are inserted after the words "work or" in the first sentence; and in the second sentence, the word "operate" is replaced by the words "automatically operate (e.g., by opening of the release cabinet door)".

91 The following text is added at the end of paragraph 7.7.3.3.10:

"Spaces are considered as separated where divisions comply with tables 7.4-1 and 7.4-2, as appropriate, or the divisions are gastight and of steel or equivalent materials."

92 The following text is added at the end of paragraph 7.7.3.3.12:

"without moving the containers completely from their fixing position."

93 The existing paragraph 7.7.3.3.14 is replaced by the following:

"7.7.3.3.14 When the fire-extinguishing medium is stored outside a protected space, it shall be stored in a room which shall be situated in a safe and readily accessible location. For the purpose of the application of tables 7.4-1 and 7.4-2, such storage rooms shall be treated as control stations. For the storage rooms for fire-extinguishing media of fixed gas fire-extinguishing systems, the following apply:

.1 the storage room shall not be used for any other purposes;

.2 if the storage space is located below deck, it shall be located no more than one deck below the open deck and shall be directly accessible by a stairway or ladder from the open deck;

.3 spaces shall be effectively ventilated. Spaces which are located below deck or spaces where access from the open deck is not provided, shall be fitted with a mechanical ventilation system designed to take exhaust air from the bottom of the space and shall be sized to provide at least 6 air changes per hour; and

.4 access doors shall open outwards, and bulkheads and decks including doors and other means of closing any opening therein, which form the boundaries between such rooms and adjacent enclosed spaces shall be gastight."

94 The following text is added at the end of paragraph 7.7.4:

"Each portable fire extinguisher shall:

.1 not exceed 23 kg in total mass;

.2 have a capacity of at least 5 kg if of powder or carbon dioxide type;

.3 have a capacity of at least 9 *l* if of foam type;

.4 be examined annually;

.5 be provided with a sign indicating the date when was last examined;

.6 be hydraulic-pressure tested (cylinders and propellant bottles) every 10 years;

.7 not be placed in accommodation spaces if of carbon dioxide type;

.8 if located in control stations and other spaces containing electrical or electronic equipment or appliances necessary for the safety of the craft, be provided with extinguishing media which are neither electrically conductive nor harmful to the equipment and appliances;

.9 be ready for use and located in easily visible places such that it can be reached quickly and easily at any time in the event of a fire;

.10 be located such that its serviceability is not impaired by the weather, vibration or other external factors; and

.11 be provided with a device to identify whether it has been used."

95 In paragraph 7.7.5.1, the words "independently driven pumps" are replaced by the words "pumps powered by independent sources of power".

96 The following sentence is inserted before the last sentence of paragraph 7.7.5.3:

"The fire main shall be capable of being drained and shall be fitted with valves arranged so that fire main branches can be isolated when the main is used for purposes other than fire-fighting."

97 The following text is added at the end of paragraph 7.7.5.4:

"One hydrant shall be located in the vicinity of and outside each entrance to a machinery space."

98 In paragraph 7.7.5.5, the text after the words "non-perishable material" is replaced by the following:

"Fire hoses shall have a length of:

.1 at least 10 m;

.2 not more than 15 m in machinery spaces; and

.3 not more than 20 m for other spaces and open decks."

99 In paragraph 7.8.1.1, the words "Subject to 7.8.1.2" are inserted at the beginning and the second sentence is deleted.

100 The following new paragraph 7.8.1.2 is added after the existing paragraph 7.8.1.1 and the existing paragraphs 7.8.1.2 and 7.8.1.3 are renumbered as paragraphs 7.8.1.3 and 7.8.1.4:

"7.8.1.2 The vehicle deck of a special category space or a ro-ro space, including an open ro-ro space, need only be insulated on the underside if required. Vehicle decks located totally within ro-ro spaces may be accepted without structural fire protection, provided these decks are not part of, or do not provide support to, the craft's main load-carrying structure and provided satisfactory measures are taken to ensure that the safety of the craft, including fire-fighting abilities, integrity of fire resisting divisions and means of evacuation, is not affected by a partial or total collapse of these internal decks."

101 The first paragraph of 7.8.2 is renumbered 7.8.2.1 and the following text is inserted after paragraph 7.8.1:

"7.8.2.2 The pumps of the system shall be capable of maintaining:

.1 half the total required application rate with any one pump unit out of function, for category A craft; and

.2 the total required application rate with any one pump unit out of function, for category B craft.

7.8.2.3 Fixed fire-extinguishing systems shall fulfil the following requirements:

.1 the valve manifold shall be provided with a pressure gauge, and each of the valves shall be marked to identify the protected areas;

.2 instructions for maintenance and operation of the installation shall be set up in the room where the valves are located; and

.3 the piping system shall be provided with a sufficient number of drainage valves."

102 The following text is added at the end of paragraph 7.8.4.1:

", which shall consist of a metal L-shaped pipe, the long limb being approximately 2 m in length and capable of being fitted to a fire hose, and the short limb being approximately 250 mm in length and fitted with a fixed water fog nozzle or capable of being fitted with a water spray nozzle;"

103 The following text is added at the end of paragraph 7.8.4.3:

"In addition to complying with 7.7.4, fire extinguishers shall be suitable for A and B class* fires and have a capacity of 12 kg dry powder or equivalent."

104 Paragraph 7.8.6 is renumbered as paragraph 7.8.6.1 and the words "scuppers shall be fitted so" in the first sentence are replaced by the words "pumping and drainage arrangements shall be such as to prevent such accumulation. Scuppers fitted for this purpose shall be so arranged".

105 The following new paragraph 7.8.6.2 is inserted after the existing paragraph 7.8.6.1:

"7.8.6.2 In respect of scuppers and drainage pumps fitted in accordance with 7.8.6.1:

.1 the amount of water for which drainage is provided shall take into account the capacity of both the water spraying system pumps and required number of fire hose nozzles;

.2 the drainage system shall have a capacity of not less than 125% of the capacity specified in .1 above; and

.3 bilge wells shall be of sufficient holding capacity and shall be arranged at the side shell of the ship at a distance from each other of not more than 40 m in each watertight compartment."

106 In paragraph 7.8.7.1, the text after the first sentence is replaced by the following:

"Electrical equipment installed more than 450 mm above the deck or platform shall be of a type enclosed and protected by an enclosure having an ingress protection based on an international standard acceptable to the Organization*. However, if the installation

* Refer to publication IEC 60529 – Degrees of protection provided by enclosures (IP Code), in particular, refer to the standards for an ingress protection of at least IP 55 or refer to the publication IEC 60079 series – Electrical apparatus for explosive gas atmospheres, in particular, refer to the standards for protection by an apparatus for use in zone 2 areas.

electrical equipment and wiring less than 450 mm above the deck or platform is necessary for the safe operation of the craft, such electrical equipment and wiring may be installed provided that the equipment is certified "safe type" based on an international standard acceptable to the Organization.* "

* Refer to the publication IEC 60079 series – Electrical apparatus for explosive gas atmospheres, in particular, refer to the standards for equipment and wiring to be suitable for use in zone 1 areas.

107 The existing text of paragraph 7.8.7.2 is replaced by the following:

"7.8.7.2 If installed in an exhaust ventilation duct, electrical equipment shall be certified "safe type".[1] The equipment and wiring, if fitted, shall be suitable for use based on standards acceptable to the Organization* and the outlet from any exhaust duct shall be sited in a safe position, having regard to other possible sources of ignition."

108 In paragraph 7.10.1.2, the words "complying with the requirements of 7.8.4.1" are inserted after the words "water fog applicator".

109 In paragraph 7.10.2, the words "or sets of personal equipment shall be so stored as" are replaced by the words "and sets of personal equipment shall be stored in permanently and clearly marked locations arranged so as".

110 In paragraph 7.10.3.1.2, the words "and gloves" are deleted.

111 In paragraph 7.10.3.1.4, the word "type" is replaced by the words "explosion-proof type certified to a standard acceptable to the Organization**".

112 The words "having handle provided with high-voltage insulation" are added at the end of paragraph 7.10.3.1.5.

113 Paragraphs 7.10.3.2 and 7.10.3.2.1 are deleted, the remaining paragraph 7.10.3.2.2 is renumbered as 7.10.3.2 and the words "of an approved type" are inserted after the words "breathing apparatus".

114 The second sentence of the renumbered paragraph 7.10.3.2 is replaced by the following:

"Two spare charges suitable for use with the apparatus shall be provided for each required apparatus."

115 In paragraph 7.10.3.3, the words "sufficient length" are replaced by the words "approximately 30 m in length" and the following new sentence is added at the end:

"The lifeline shall be subjected to a test by static load of 3.5 kN for 5 min."

116 In paragraph 7.11.1.3, the words "within the structural fire protection time for areas of major fire hazard." are added at the end.

[1] Refer to publication IEC 60092.
* Refer to zone 1 areas as defined in the publication IEC 60079 series.
** Refer to gas group II A and temperature class T 3 of the publication IEC 60079 series.

117 In paragraph 7.13.1, the following sentence is inserted after the first sentence:

"A stairway open at one deck shall be considered part of the space to which it is open and consequently shall be protected by any sprinkler system provided for that space."

118 In paragraph 7.13.3, the words "operational speed" are replaced by the words "90% of maximum speed".

119 The existing text of subparagraph .2 of paragraph 7.17.2.2 is replaced by the following:

".2 purpose-built container craft and cargo spaces intended for the carriage of dangerous goods in freight containers and portable tanks. In this regard, a purpose-built container space is a cargo space fitted with cell guides for stowage and securing containers;"

120 In paragraph 7.17.2.3, the words ", including special category spaces," are inserted after the words "ro-ro spaces".

121 The following text is added at the end of paragraph 7.17.3:

"For the purpose of this section, "on deck" shall be taken to mean spaces on the weather deck."

122 In paragraph 7.17.3.1.2, the word "supplying" is replaced by the words "simultaneously supplying the arrangements required by 7.17.3.1.3 for the largest designated cargo space and the" and the following sentence is inserted after the first sentence:

"This requirement shall be met by the total capacity of the main fire pump(s) not including the capacity of the emergency fire pump, if fitted."

123 In the existing paragraph 7.17.3.1.3:

.1 the words "shall be provided" are deleted from the end of the first sentence and are re-inserted after the first word "Means";

.2 the words "copious quantities of water" are replaced by the words "with water at not less than 5 *l*/min/m^2 of the horizontal area of cargo spaces"; and

.3 the words "meet the requirements of 7.8.6 and" are inserted after the words "drainage and pumping arrangements shall".

124 The following sentence is added at the end of paragraph 7.17.3.1.4:

"Substitution by a high expansion foam system complying with regulation II-2/10.4.1.1.2 of the Convention is also acceptable."

125 The following new paragraphs 7.17.3.1.5 and 7.17.3.1.6 are added after existing paragraph 7.17.3.1.4:

"7.17.3.1.5 The requirements of 7.17.3.1.1 to 7.17.3.1.4 may be fulfilled by a water spray system approved by the Administration based on the standards developed by the Organization*, provided that the amount of water required for fire-fighting purposes in the largest cargo space allows simultaneous use of the water spray system plus four jets of water from hose nozzles in accordance with 7.17.3.1.2.

7.17.3.1.6 Craft carrying dangerous goods shall be provided with three fire hoses and nozzles complying with 7.7.5.6 in addition to those required by 7.7.5.5."

* Refer to paragraphs 9.2, 9.3 and 9.4 of the Interim guidelines for open-top containerships (MSC/Circ.608/Rev.1).

126 In the first sentence of paragraph 7.17.3.2, the words "or vehicle decks" are added after the words "enclosed cargo spaces".

127 In paragraph 7.17.3.4.2, the sentence "Exhaust fans shall be of non-sparking type." is inserted after the first sentence and the text of the last sentence is replaced by the following:

"Suitable wire mesh guards having a mesh size not exceeding 13 mm x 13 mm shall be fitted over inlet and outlet ventilation openings to prevent foreign objects from entering into the casing."

128 Existing paragraph 7.17.3.4.3 is renumbered as paragraph 7.17.3.4.4; the relevant reference in table 7.17-2 is amended; and the following new paragraph 7.17.3.4.3 is inserted:

"7.17.3.4.3 If adjacent spaces are not separated from cargo spaces by gastight bulkheads or decks, ventilation requirements shall apply to the adjacent spaces as for the cargo space itself."

129 The following new paragraph 7.17.3.4.5 is added after the existing paragraph 7.17.3.4.4:

"7.17.3.4.5 For open-top container craft, power ventilation is required only for the lower part of the cargo hold for which purpose-built ducting is required. The ventilation rate shall be at least two air changes per hour based on the empty hold volume below the weather deck."

130 In table 7.17-1, the words "(includes cargoes of group B of the Code of Safe Practice for Solid Bulk Cargoes, 2004, except for cargoes denoted Materials Hazardous in Bulk)" are added to the words "Solid dangerous goods in bulk" at the head of the right-hand column.

131 In table 7.17-1, the words "per hour" are added at the end of the second sentence of note 1.

132 In table 7.17-2, note 4, the words "residues of" are added after the word "containing".

133 In table 7.17-2, the following note 7 is inserted with references from row 7.17.3.4.2, columns 4.2 and 4.3, and the existing notes 7 to 11 to table 7.17-3 together with their references in that table are renumbered as notes 8 to 12:

"7 For seedcake containing residues of solvent extraction and cargoes of BC Code Class 4.3, two separate fans shall be permanently fitted unless portable type fans have been adapted for being securely fitted (e.g., fixed) prior to loading and during the voyage. The ventilation system shall comply with the provisions of 7.17.3.4.1 and 7.17.3.4.2. Ventilation shall be such that any escaping gases cannot reach public spaces or crew accommodation on or under deck."

134 In table 7.17-3, in the seventh and eighth columns, the references to "3.1 3.2" and "3.3" are replaced by the reference to "3" and the following new note 13 is added to "x" in column "5.2", last and penultimate lines:

"Under the provisions of the IMDG Code, stowage of class 5.2 dangerous goods under deck or in enclosed ro-ro spaces is prohibited."

135 At the end of the existing paragraph 7.17.3.5, the following new text is added:

"as follows:

.1 if the bilge drainage system for cargo spaces is additional to the system served by pumps in the machinery space, the capacity of the system shall be not less than than 10 m^3/h per cargo space served. If the additional system is a common system, the capacity need not exceed 25 m^3/h. The additional bilge system need not be arranged with redundancy. Whenever flammable or toxic liquids are carried, the bilge line into the machinery space shall be isolated either by fitting a blank flange or by a closed lockable valve;

.2 if bilge drainage of cargo spaces is arranged by gravity drainage, the drainage shall be either lead directly overboard or to a closed drain tank located outside the machinery spaces. The tank shall be provided with vent pipe to a safe location on the open deck;

.3 enclosed spaces outside machinery spaces containing bilge pumps serving cargo spaces intended for carriage of flammable or toxic liquids shall be fitted with separate mechanical ventilation giving at least six air changes per hour. Electrical equipment in the space shall be of certified safe type.* If the space has access from another enclosed space, the door shall be self-closing; and

.4 drainage from a cargo space into bilge wells in a lower space is only permitted if that space satisfies the same requirements as the cargo space above."

* Refer to publication IEC 60092-506: Special features – Ships carrying dangerous goods and materials hazardous only in bulk.

136 The following text is added at the end of the first sentence of paragraph 7.17.3.6.1:

"and shall be selected taking into account the hazards associated with the chemicals being transported and the standards developed by the Organization according to the class and physical state."

137 The following new sentence is added at the end of paragraph 7.17.3.6.2:

"In addition to the requirements of 7.10.3.2.2, two spare charges suitable for use with the breathing apparatus shall be provided for each required apparatus."

138 In paragraph 7.17.3.8.2, the words "meet the requirements of 7.8.6, have valves operable from outside the space at a position in the vicinity of the extinguishing system controls and" are inserted after the words "drainage and pumping arrangements shall".

CHAPTER 8
LIFE-SAVING APPLIANCES AND ARRANGEMENTS

139 Existing paragraphs 8.7.6 to 8.7.10 are renumbered as paragraphs 8.7.7 to 8.7.11 and the following new paragraph 8.7.6 is inserted:

"8.7.6 Where an MES is provided for embarkation into survival craft on a category B craft, an alternative means of evacuating passengers and crew into survival craft on the same side of the craft in conditions up to and including the worst intended conditions is to be provided for use if the MES is lost or rendered unserviceable in the event of damage of longitudinal extent specified in 2.6.7.1."

140 In paragraph 8.9.14.2, after the word "shall", the words "be subject to a thorough examination at the annual surveys required by paragraph 1.5.1.3" are added and the remainder of the sentence is deleted.

141 In paragraph 8.9.14.3, after word "brake", the words "at maximum lowering speed. The load to be applied shall be the mass of the survival craft or rescue boat without persons on board, except that, at intervals not exceeding five years, the test shall be carried out with a proof load equal to 1.1 times the weight of the survival craft or rescue boat and its full complement of persons and equipment." are added and the remainder of the sentence is deleted.

CHAPTER 10
AUXILIARY SYSTEMS

142 In paragraph 10.2.4.8, the words "the filling pipes" at the end of the first sentence are replaced by the words "bunkering pipes and any filling pipes served by on-board pumps"; and the words "and, for fuel of flashpoint less than 43°C," are replaced by the words "where there is no risk of fire or explosion from the emergence of oils and vapour, shall not lead into crew spaces, passenger spaces, special category spaces, ro-ro spaces (other than open ro-ro spaces), machinery spaces or similar spaces. For fuel of flashpoint less than 43°C such valves and pipes".

CHAPTER 11
REMOTE CONTROL, ALARM AND SAFETY SYSTEMS

143 In paragraph 11.3.3, in the first sentence, the words "in a station" are replaced by the words "at one or more stations".

144 In paragraph 11.4.1.2, subparagraphs .4 to .11 are renumbered as subparagraphs .5 to .12 and the following new subparagraph .4 is inserted after the existing subparagraph .3:

".4 detection of bilge water in each watertight compartment below the design waterline;"

CHAPTER 13
SHIPBORNE NAVIGATIONAL SYSTEMS AND EQUIPMENT AND VOYAGE DATA RECORDERS

145 The existing paragraph 13.8.2 is renumbered as paragraph 13.8.3 and the following new paragraph 13.8.2 is inserted:

"13.8.2 High-speed craft shall be fitted with an ECDIS as follows:

.1 craft constructed on or after 1 July 2008;

.2 craft constructed before 1 July 2008, not later than 1 July 2010."

CHAPTER 14
RADIOCOMMUNICATIONS

146 The existing text of paragraph 14.15.10 is replaced by the following:

"14.15.10 Satellite EPIRBs on all craft shall be:

.1 annually tested for all aspects of operational efficiency, with special emphasis on checking the emission on operational frequencies, coding and registration, at intervals as specified below:

.1 on passenger craft, within 3 months before the expiry date of the High-Speed Craft Safety Certificate; and

.2 on cargo craft, within 3 months before the expiry date, or 3 months before or after the anniversary date, of the High-Speed Craft Safety Certificate;

The test may be conducted on board the craft or at an approved testing station; and

.2 subject to maintenance at intervals not exceeding five years, to be performed at an approved shore-based maintenance facility."

CHAPTER 18
OPERATIONAL REQUIREMENTS

147 The existing text of subparagraph .4 of paragraph 18.1.3.4 is replaced by the following:

".4 provision in the area of operation of a base port having functions and facilities in accordance with the requirements of this Code;"

ANNEX 1
FORM OF HIGH–SPEED CRAFT SAFETY CERTIFICATE AND RECORD OF EQUIPMENT

148 In the Record of Equipment for High-Speed Craft Safety Certificate, in section 3, the following new item 16 is inserted after the existing item 15 and the existing item 16 is renumbered as 17.

"16 Long-range identification and tracking system"

149 In the Record of Equipment for High-Speed Craft Safety Certificate, section 4, the words "Two-way on-scene radiocommunications 121.5 MHz & 123.1 MHz" are inserted as item 7.

ANNEX 6
STABILITY OF HYDROFOIL CRAFT

150 In the chapeau paragraph, the following new paragraphs are inserted after the existing introductory paragraph and prior to paragraph 1:

"As required by 2.3.1, the stability of hydrofoil craft shall be assessed under all permitted conditions of loading.

The term "hull-borne mode" has the same meaning as "displacement mode" defined in 1.4.22 of the Code.

The term "foil-borne mode" has the same meaning as "non-displacement mode" defined in 1.4.38 of the Code."

ANNEX 7
STABILITY OF MULTIHULL CRAFT

151 At the end of paragraph 1.4.2, the following sentence is added:

"Alternatively, another method of assessment may be employed, as provided for in 2.1.4 of this Code."

152 At the end of paragraph 1.5, the following sentence is added:

"The determination of θ_r using model test or other data shall be made using the method for determining θ_Z in 1.1.5.3 of annex 6."

153 At the end of paragraph 2.3, the words ", as determined in 1.5 of this annex" are added.

ANNEX 8
STABILITY OF MONOHULL CRAFT

154 The existing text of paragraph 1.1 is replaced by the following:

"1.1 The weather criterion contained in paragraph 3.2 of the Intact Stability Code* shall apply. In applying the weather criterion, the value of wind pressure *P* (N/m2) shall be taken as:

$$500\{V_w/26\}^2$$

where V_w = wind speed (m/s) corresponding to the worst intended conditions.

The angle of heel due to wind, in applying paragraph 3.2.2.1.2 of the Intact Stability Code, shall not exceed 16° or 80% of the angle of deck-edge immersion (whichever is less). Where the angle of heel due to wind exceeds 10°, efficient non-slip deck surfaces and suitable holding points shall be provided, in accordance with paragraph 2.13.1.1 of this Code. In applying the weather criterion, account shall also be taken of the roll damping characteristics of individual craft in assessing the assumed roll angle θ_1, which may alternatively be derived from model or full scale tests using the method for determining θ_z in 1.1.5.3 of annex 6. Hulls with features which greatly increase damping, such as immersed sidehulls, substantial arrays of foils, or flexible skirts or seals, are likely to experience significantly smaller magnitudes of roll angle. For such craft, therefore, the roll angle shall be derived from model or full scale tests or, in the absence of such data, shall be taken as 15°."

---

* Refer to the Code on Intact Stability for All Types of Ships Covered by IMO Instruments, adopted by the Organization by resolution A.749(18), as amended by resolution MSC.75(69).

155 The following new sentence is added at the end of paragraph 2.1.1:

"The range shall be taken as the difference between the equilibrium heel angle and the heel angle at which the residual righting lever subsequently becomes negative or the angle at which progressive flooding occurs, whichever is less."

ANNEX 9
DEFINITIONS, REQUIREMENTS AND COMPLIANCE CRITERIA RELATED TO OPERATIONAL AND SAFETY PERFORMANCE

156 In the second sentence of the first paragraph, the word "prototype" is replaced by the word "first".

157 In paragraphs 2.1.1, 2.1.2, 2.1.3 and 3.3.1, the words "maximum operational speed" are replaced by the words "90% of maximum speed".

158 In paragraph 3.2, the sentence "The worst intended conditions shall not exceed 150% of the more severe of the two measured sea conditions" is inserted as the penultimate sentence.

ANNEX 10
CRITERIA FOR TESTING AND EVALUATION OF SEATS

159 In the title, the words "REVENUE AND CREW" are deleted.

160 In paragraph 3.4, the words "same strength and stiffness" are replaced by the words "equivalent strength and stiffness".

161 In paragraph 3.6, after the words "and measurement," the words "if possible" are deleted.

162 In paragraph 3.9, the following subparagraphs .3.3 to .3.5 are inserted after the existing subparagraph .3.2 and the existing subparagraph .3.3 is renumbered as subparagraph.3.6:

".3.3 neck flexion does not exceed 88 Nm;

.3.4 neck extension does not exceed 48 Nm;

.3.5 in lieu of the requirements of subparagraphs .3.3 and .3.4 above, a seatback or headrest of at least 850 mm above the seat cushion is acceptable; and".

163 The following new annex 12 is added after the existing annex 11:

"**ANNEX 12**

FACTORS TO BE CONSIDERED IN DETERMINING CRAFT OPERATING LIMITATIONS*

1 Purpose and scope

The purpose of this annex is to identify the parameters to which consideration should be given when determining the worst intended conditions (defined in 1.4.61) and other operational limitations (defined in 1.4.41) for insertion into the Permit to Operate, in order to facilitate consistent application of the Code.

2 Factors to be considered

As a minimum, the following factors shall be considered:

.1 The maximum distance from refuge implied by 1.3.4.

.2 The availability of rescue resources to comply with 1.4.12.1 (category A craft only).

.3 Minimum air temperature (susceptibility to icing), visibility and depth of water for safe operation as addressed by 1.4.61.

.4 The significant wave height and maximum mean wind speed used when applying the requirements for stability and buoyancy in chapter 2 and associated annexes.

.5 The safe seakeeping limitations (especially significant wave height) considering the known stability hazards listed in 2.1.5, the operating conditions on the intended route (see 18.1.3.2) and the motions experienced during operation defined in 3.3 of annex 9.

* Refer to the guidelines to be developed by the Organization.

.6 The structural safety of the craft in critical design conditions according to chapter 3.

.7 The safe deployment and operation of evacuation systems and survival craft as required by 8.6.5.

.8 The safe handling limitations determined in accordance with the sea trials required by chapter 17 and annexes 3 and 9, identifying any limitations on weight and centre-of-gravity position according to 17.3, and the effects of failures and malfunctions according to 17.4."

***

ANNEX 9

RESOLUTION MSC.223(82)

(adopted on 8 December 2006)

ADOPTION OF AMENDMENTS TO THE PROTOCOL OF 1988 RELATING TO THE INTERNATIONAL CONVENTION ON LOAD LINES, 1966, AS AMENDED

THE MARITIME SAFETY COMMITTEE,

RECALLING Article 28(b) of the Convention on the International Maritime Organization concerning the functions of the Committee,

RECALLING FURTHER article VI of the Protocol of 1988 relating to the International Convention on Load Lines, 1966 (hereinafter referred to as the "1988 Load Lines Protocol") concerning amendment procedures,

HAVING CONSIDERED, at its eighty-second session, amendments to the 1988 Load Lines Protocol proposed and circulated in accordance with paragraph 2(a) of article VI thereof,

1. ADOPTS, in accordance with paragraph 2(d) of article VI of the 1988 Load Lines Protocol, amendments to the 1988 Load Lines Protocol, the text of which is set out in the Annex to the present resolution;

2. DETERMINES, in accordance with paragraph 2(f)(ii)(bb) of article VI of the 1988 Load Lines Protocol, that the said amendments shall be deemed to have been accepted on 1 January 2008, unless, prior to that date, more than one third of the Parties to the 1988 Load Lines Protocol or Parties the combined merchant fleets of which constitute not less than 50% of the gross tonnage of the world's merchant fleet, have notified their objections to the amendments;

3. INVITES the Parties concerned to note that, in accordance with paragraph 2(g)(ii) of article VI of the 1988 Load Lines Protocol, the amendments shall enter into force on 1 July 2008 upon their acceptance in accordance with paragraph 2 above;

4. REQUESTS the Secretary-General, in conformity with paragraph 2(e) of article VI of the 1988 Load Lines Protocol, to transmit certified copies of the present resolution and the text of the amendments contained in the Annex to all Parties to the 1988 Load Lines Protocol;

5. FURTHER REQUESTS the Secretary-General to transmit copies of this resolution and its Annex to Members of the Organization, which are not Parties to the 1988 Load Lines Protocol.

ANNEX

AMENDMENTS TO THE PROTOCOL OF 1988 RELATING TO THE INTERNATIONAL CONVENTION ON LOAD LINES, 1966, AS AMENDED

ANNEX B
ANNEXES TO THE CONVENTION AS MODIFIED BY THE PROTOCOL OF 1988 RELATING THERETO

ANNEX I
REGULATIONS FOR DETERMINING LOAD LINES

CHAPTER II
CONDITIONS OF ASSIGNMENT OF FREEBOARD

Regulation 22 – Scuppers, inlets and discharges

1 In paragraph (4) of the regulation, the reference to "(2)" is replaced by reference to "(1)".

CHAPTER III
FREEBOARDS

Regulation 39 – Minimum bow height and reserve buoyancy

2 In paragraph (1) of the regulation, the words "d_l is the draught at 85% of the depth D, in metres;" are replaced by the words "d_l is the draught at 85% of the least moulded depth, in metres;".

***

ANNEX 10

RESOLUTION MSC.224(82)

(adopted on 8 December 2006)

ADOPTION OF AMENDMENTS TO THE CODE OF SAFETY FOR DYNAMICALLY SUPPORTED CRAFT, AS AMENDED

THE MARITIME SAFETY COMMITTEE,

RECALLING Article 28(b) of the Convention on the International Maritime Organization concerning the functions of the Committee,

RECALLING ALSO resolution A.373(X) by which the Assembly, at its tenth session, adopted the Code of Safety for Dynamically Supported Craft,

NOTING that the Assembly, when adopting resolution A.373(X), authorized the Committee to amend the Code as may be necessary,

HAVING CONSIDERED, at its eighty-second session, amendments to the Code of Safety for Dynamically Supported Craft, prepared by the Sub-Committees on Ship Design and Equipment and on Safety of Navigation,

1. ADOPTS amendments to the Code of Safety for Dynamically Supported Craft, as amended, the text of which is set out in the Annex to the present resolution;

2. DETERMINES that the above-said amendments should become effective on 1 July 2008.

ANNEX

AMENDMENTS TO THE CODE OF SAFETY FOR DYNAMICALLY SUPPORTED CRAFT, AS AMENDED

CHAPTER 1
GENERAL

1 The following new paragraph 1.1.5 is added after existing paragraph 1.1.4:

"1.1.5 New installation of materials containing asbestos used for the structure, machinery, electrical installations and equipment of a craft to which this Code applies should be prohibited except for:

.1 vanes used in rotary vane compressors and rotary vane vacuum pumps;

.2 watertight joints and linings used for the circulation of fluids when, at high temperature (in excess of 350°C) or pressure (in excess of 7 x 10^6 Pa), there is a risk of fire, corrosion or toxicity; and

.3 supple and flexible thermal insulation assemblies used for temperatures above 1000°C."

CHAPTER 8
LIFE-SAVING APPLIANCES

2 The following new paragraph 8.2.9 is inserted after the existing paragraph 8.2.8:

"8.2.9 Periodic servicing of launching appliances

Launching appliances:

.1 should be serviced at recommended intervals in accordance with instructions for on-board maintenance as required by regulation III/36 of the Convention;

.2 should be subjected to a thorough examination at the annual surveys required by paragraph 1.5.1(b); and

.3 should, upon completion of the examination in .2, be subjected to a dynamic test of the winch brake at maximum lowering speed. The load to be applied should be the mass of the survival craft or rescue boat without persons on board, except that at intervals not exceeding five years, the test should be carried out with a proof load equal to 1.1 times the weight of the survival craft or rescue boat and its full complement of persons and equipment."

3 The following new sections 8.7, 8.8 and 8.9 are inserted after existing section 8.6:

"**8.7 Servicing of inflatable liferafts, inflatable lifejackets, marine evacuation systems and inflatable rescue boats**

Every inflatable liferaft, inflatable lifejacket and MES should be serviced:

.1 at intervals not exceeding 12 months, provided where in any case this is not practicable, the Administration may extend this period by one month;

.2 at an approved service station which is competent to service them, maintains proper servicing facilities and uses only properly trained personnel.*

8.8 Rotational deployment of marine evacuation systems

In addition to, or in conjunction with, the servicing intervals of marine evacuation systems required above, each marine evacuation system should be deployed from the craft on a rotational basis at intervals to be agreed by the Administration, provided that each system is to be deployed at least once every six years.

8.9 Novel life-saving appliances or arrangements

8.9.1 Before giving approval to novel life-saving appliances or arrangements, the Administration should ensure that such appliances or arrangements:

.1 provide safety standards at least equivalent to the requirements of this chapter and have been evaluated and tested in accordance with the recommendations of the Organization;** or

.2 have successfully undergone, to the satisfaction of the Administration, evaluation and tests which are substantially equivalent to those recommendations.

8.9.2 An Administration which approves new and novel inflatable liferaft arrangements pursuant to 8.9.1 may allow for extended servicing intervals under the following conditions:

.1 The new and novel liferaft arrangement should maintain the same standard, as required by testing procedures, throughout the extended servicing intervals.

.2 The liferaft system should be checked on board by certified personnel according to 8.7.

.3 Service at intervals not exceeding five years should be carried out in accordance with the recommendations of the Organization.

---

* Refer to the Recommendations on conditions for the approval of servicing stations for inflatable liferafts, adopted by the Organization by resolution A.761(18) as amended by resolution MSC.55(66).

** Refer to the Code of Practice for the Evaluation, Testing and Acceptance of Prototype Novel Life-Saving Appliances and Arrangements, adopted by the Organization by resolution A.520(13).

8.9.3 An Administration which permits extension of liferaft service intervals in accordance with 8.9.2 should notify the Organization in accordance with regulation I/5(b) of the Convention."

CHAPTER 13
RADIOCOMMUNICATION AND NAVIGATIONAL EQUIPMENT

4 In paragraph 13.1, the words "as amended (up to and including resolutions MSC.69(69), MSC.123(75) and MSC.152(78))" are inserted at the end.

5 The text of existing paragraph 13.2 under the heading "Navigation – General" is renumbered as 13.2.1 and the following new paragraph 13.2.2 is inserted:

"13.2.2 The navigation equipment and its installation should be to the satisfaction of the Administration. The Administration should determine to what extent the navigational equipment provisions of this chapter do not apply to craft below 150 gross tonnage."

6 The following new paragraphs 13.10, 13.11 and 13.12 are inserted after existing paragraph 13.9:

"**13.10 Automatic identification system**

13.10.1 Craft should be provided with an automatic identification system (AIS) as follows:

.1 in the case of passenger craft, no later than 1 July 2008;

.2 in the case of cargo craft of 3,000 gross tonnage and upwards, no later than 1 July 2008; and

.3 in the case of cargo craft of less than 3,000 gross tonnage, no later than 1 July 2008.

13.10.2 AIS should:

.1 provide automatically to appropriately equipped shore stations, other craft and aircraft information, including the craft's identity, type, position, course, speed, navigational status and other safety-related information;

.2 receive automatically such information from similarly fitted craft;

.3 monitor and track craft; and

.4 exchange data with shore-based facilities.

13.10.3 The requirements of 13.10.2 should not be applied to cases where international agreements, rules or standards provide for the protection of navigational information.

13.10.4 AIS should be operated taking into account the guidelines adopted by the Organization.*

13.11 Voyage data recorders (VDR)**

13.11.1 To assist in casualty investigations, all passenger craft, including existing passenger craft, should be fitted with a voyage data recorder (VDR).

13.11.2 The Administration may exempt passenger craft, other than ro-ro passenger craft, from being fitted with a VDR where it can be demonstrated that interfacing a VDR with the existing equipment on the craft is unreasonable and impracticable.

13.11.3 The voyage data recorder system, including all sensors, should be subjected to an annual performance test. The test should be conducted by an approved testing or servicing facility to verify the accuracy, duration and recoverability of the recorded data. In addition, tests and inspections should be conducted to determine the serviceability of all protective enclosures and devices fitted to aid location. A copy of the certificate of compliance issued by the testing facility, stating the date of compliance and the applicable performance standards, should be retained on board the craft.

13.12 Nautical charts and publications

13.12.1 All craft, including existing craft, should be provided with nautical charts and nautical publications to plan and display the craft's route for the intended voyage and to plot and monitor positions throughout the voyage. An electronic chart display and information system (ECDIS) may be accepted as meeting the chart carriage requirements of this paragraph.

13.12.2 All craft, including existing craft, should be fitted with an ECDIS not later than 1 July 2010.

13.12.3 Back-up arrangements should be provided to meet the functional requirements of 13.12.1, if this function is partly or fully fulfilled by electronic means.*** "

---

* Refer to Guidelines for the onboard operational use of shipborne automatic identification systems (AIS), adopted by the Organization by resolution A.917(22).

** Refer to Recommendation and Performance Standards for voyage data recorders (VDR's), adopted by the Organization by resolution A.861(20).

*** An appropriate portfolio of paper nautical charts may be used as a backup arrangement for ECDIS. Other backup arrangements for ECDIS are acceptable (see appendix 6 to resolution A.817(19), as amended).

***

ANNEX 11

RESOLUTION MSC.225(82)

(adopted on 8 December 2006)

ADOPTION OF AMENDMENTS TO THE CODE FOR THE CONSTRUCTION AND EQUIPMENT OF SHIPS CARRYING LIQUEFIED GASES IN BULK, AS AMENDED

THE MARITIME SAFETY COMMITTEE,

RECALLING Article 28(b) of the Convention on the International Maritime Organization concerning the functions of the Committee,

RECALLING ALSO resolution A.328(IX), by which the Assembly, at its ninth session, adopted the Code for the Construction and Equipment of Ships Carrying Liquefied Gases in Bulk (Gas Carrier Code) and authorized the Committee to amend the Code as may be necessary,

NOTING resolution MSC.220(82), by which it adopted pertinent amendments to the International Code for the Construction and Equipment of Ships Carrying Liquefied Gases in Bulk (IGC Code),

RECOGNIZING the need for the amendments to the Gas Carrier Code to become effective on the date, on which the corresponding amendments to the IGC Code enter into force,

HAVING CONSIDERED, at its eighty-second session, amendments to the Gas Carrier Code prepared by the Sub-Committee on Bulk Liquids and Gases, at its ninth session,

1. ADOPTS amendments to the Code for the Construction and Equipment of Ships Carrying Liquefied Gases in Bulk, as amended, the text of which is set out in the Annex to the present resolution;

2. DETERMINES that the above-said amendments should become effective on 1 July 2008.

ANNEX

AMENDMENTS TO THE CODE FOR THE CONSTRUCTION AND EQUIPMENT OF SHIPS CARRYING LIQUEFIED GASES IN BULK, AS AMENDED

CHAPTER XI
FIRE PROTECTION AND FIRE EXTINGUISHING

11.1 Fire safety requirements

1 In section 11.1, the following new paragraph 11.1.5 is added:

"11.1.5 The following requirements in SOLAS chapter II-2, as adopted by MSC.99(73), should apply:

(a) regulations 13.3.4.2 to 13.3.4.5 and 13.4.3 to ships of 500 gross tonnage and over;

(b) regulations in Part E, except regulations 16.3.2.2 and 16.3.2.3; and

(c) regulations 10.4.13 and 10.6.4 for new installations.

CHAPTER XIX
SUMMARY OF MINIMUM REQUIREMENTS

2 The following new products are added to the table:

a	b	c	d	e	f	g	h
Product name	UN number	Ship type	Independent tank type C required	Control of vapour space within cargo tanks	Vapour detection	Gauging	Special requirements
Dimethyl ether	-	IIG / IIPG	-	-	I+T	C	
Carbon dioxide	-	IIIG	Yes	-	-	C	

***

ANNEX 12

RESOLUTION MSC.226(82)

(adopted on 8 December 2006)

ADOPTION OF AMENDMENTS TO THE REVISED RECOMMENDATION ON TESTING OF LIFE-SAVING APPLIANCES, AS AMENDED

THE MARITIME SAFETY COMMITTEE,

RECALLING Article 28(b) of the Convention on the International Maritime Organization concerning the functions of the Committee,

RECALLING ALSO resolution A.689(17) on Testing of life-saving appliances, by which the Assembly, at its seventeenth session, adopted the Recommendation on testing of life-saving appliances,

RECALLING FURTHER that the Assembly, when adopting resolution A.689(17), authorized the Committee to keep the Recommendation on testing of life-saving appliances under review and to adopt, when appropriate, amendments thereto,

NOTING resolution MSC.81(70), by which, at its seventieth session, it adopted the Revised recommendation on testing of life-saving appliances, recognizing the need to introduce more precise provisions for the testing of life-saving appliances based on the requirements of the International Life-Saving Appliances (LSA) Code,

BEING DESIROUS to appropriately address inconsistencies which have been identified between the LSA Code and the Revised recommendation on testing of life-saving appliances,

HAVING CONSIDERED, at its eighty-second session, amendments to the Revised recommendation on testing of life-saving appliances, prepared by the Sub-Committee on Fire Protection, at its fiftieth session,

1. ADOPTS amendments to the Revised recommendation on testing of life-saving appliances, as amended, the text of which is set out in the Annex to the present resolution;

2. RECOMMENDS Governments to apply the annexed amendments when testing life-saving appliances;

3. DETERMINES that the above-said amendments should become effective on 1 July 2008.

ANNEX

AMENDMENTS TO THE REVISED RECOMMENDATION ON TESTING OF LIFE-SAVING APPLIANCES, AS AMENDED

INTRODUCTION

1 In the paragraph, change the year "1999" by "2010".

PART 1
PROTOTYPE TESTS FOR LIFE-SAVING APPLIANCES

1 LIFEBUOYS

2 Paragraph 1.3 is replaced by the following:

"**1.3 Drop test**

Each lifebuoy should be suspended from its upper edge via a release device so that the lower edge of the lifebuoy is at the height at which it is intended to be stowed on ships in their lightest seagoing condition, or 30 m, whichever is the greater, and dropped into the water without suffering damage. In addition, one lifebuoy should be suspended from its upper edge via a release device so that the lower edge of the lifebuoy is at a height of 2 m, and dropped three times onto a concrete floor, without suffering damage."

2 LIFEJACKETS

3 The following words are added at the end of paragraph 2.10.1.1:

"Each lifejacket should then be subjected to the tests in paragraphs 2.2, 2.3 and 2.5. A lifejacket that has been inflated automatically with one compartment uninflated should be subjected to the test in paragraph 2.2 and the test repeated until each compartment has been tested in the uninflated condition. For the fire test in paragraph 2.3, one lifejacket should be inflated and one uninflated."

4 In paragraph 2.10.4.6.2, the term "1°" is replaced by the term "5°".

5 In paragraph 2.10.4.7.2, the word "sprays" is replaced by the words "spray nozzles" and the words "a pressure of 0.3 kPa – 0.4 kPa," are deleted.

3 IMMERSION SUITS, ANTI-EXPOSURE SUITS AND THERMAL PROTECTIVE AIDS

6 In paragraph 3.1.3, in the second sentence, the words "inflate any orally inflated chambers if fitted, and don" are inserted between the words "clothing," and "and a lifejacket"; and the word "and" before the words "a lifejacket" is deleted.

7 In paragraph 3.1.4, in the first sentence, the words "a reasonable time" are replaced by "5 min".

8 In paragraph 3.1.7, the following new sentence is inserted between the existing first and second sentences:

"For a buoyant insulated immersion suit worn without a lifejacket, an auxiliary means of buoyancy such as an orally inflated bladder behind the wearer's head may be used to obtain this freeboard, provided that the freeboard obtained without the auxiliary means of buoyancy is at least 50 mm."

9 In paragraph 3.3.2, the word "conductivity" is replaced by the word "conductance"; and the term "0.25 W/(m K)" is replaced by the term "7,800 W/(m^2 K)".

4 PYROTECHNICS – ROCKET PARACHUTE FLARES, HAND FLARES AND BUOYANT SMOKE SIGNALS

10 In paragraphs 4.2.2 and 4.2.3, the words "at that temperature" are replaced by the words "immediately upon removal from the cold chamber" and "immediately upon removal from the hot chamber" respectively.

11 Paragraph 4.6.2 is replaced by the following:

"4.6.2 Laboratory testing of the flare material should establish that it will burn uniformly with an average luminous intensity of not less than 30,000 cd and that the colour of the flame is a vivid red with CIE co-ordinates x = 0.61 to 0.69 and y = 0.3 to 0.39, or computed from these co-ordinates: a wavelength of 608 $\pm$ 11 nm."

12 Paragraph 4.7.2 is replaced by the following:

"4.7.2 Laboratory testing of the flare material should establish that it will burn with an average luminous intensity of at least 15,000 cd and that the colour of the flame is vivid red with CIE co-ordinates x = 0.61 to 0.69 and y = 0.3 to 0.39, or computed from these co-ordinates: a wavelength of 608 $\pm$ 11 nm."

13 Paragraph 4.8.3 is replaced by the following and the existing footnote is deleted:

"4.8.3 The smoke density and colour of the smoke signal should be determined by laboratory testing conducted at a water temperature of +20°C to +25°C as follows:

.1 The smoke should be blown through an apparatus consisting of a 190 mm diameter duct with a fan capable of producing an entrance air flow of 18.4 m^3/min. By means of a light source with at least 10 cd on one side of the tunnel and a photoelectric cell on the other side the density of the passing smoke should be recorded. If the photocell picks up the total emitted light from the light source, then the smoke density is zero percent which means that no smoke is passing through the tunnel. The smoke density is then considered to be 100% when the photocell is not able to pick up any light of the light source through the passing smoke in the tunnel. From the amount of light which the photocell is able to pick up the smoke density should be calculated. Before each measurement, the light intensity of the 100% value should be checked. Each measurement should be recorded.

.2 The colour of the orange smoke should be evaluated by means of visual comparison, in daylight, to a colour comparison chart containing the range of acceptable orange colours. The colour comparison chart should have a gloss or matte finish, and consist of a series of at least five orange colour chips, covering the range from reddish orange (Munsell notation 8.75 YR 6/14) to yellowish orange (Munsell notation 5 YR MAX) in gradual steps of hue, chroma, and lightness. The colour chips should be secured adjacent to one another, in order of progression from reddish orange to yellowish orange, and extend on at least one side to the edge of the chart. Each colour chip should be at least 50 mm x 100 mm in size.

Note: A typical acceptable progression would be 8.75 YR 6/14; 10 R 6/14; 1.25 YR 6/14; 3.75 YR MAX; 5 YR MAX.

Note: ASTM D1535-97 specifies a method to convert between Munsell notation and CIE co-ordinates."

5 LIFERAFTS – RIGID AND INFLATABLE

14 In paragraph 5.12, the third sentence is replaced by the following:

"The accumulation of water inside the liferaft should not exceed 4 *l*."

15 Paragraph 5.17.8 is replaced by the following:

"5.17.8 The measurement of pressure drop due to leakage can be started when it has been assumed that compartment material has completed stretching due to the inflation pressure and achieved equilibrium."

16 In paragraph 5.17.13.2.2.10.1, the words "100 g weight should not be lifted" are replaced by the words "fabric should exhibit no blocking".

17 In paragraph 5.17.13.2.2.10.2, the words "the temperature of test should be 70°± 2°C and" are deleted.

6 LIFEBOATS

18 In paragraph 6.4.3, the words "remainder of the" are inserted between the words "The" and "weights" in the second sentence; and the following new sentence is inserted between the existing first and second sentences:

"Included in this loading should be a weight of 100 kg loaded in one of each type of seat installed in the lifeboat."

19 Paragraph 6.8.2 is replaced by the following:

"6.8.2 Weights representing persons who would be in the water when the lifeboat is flooded (water level more than 500 mm above the seat pan) may be omitted. Weights representing persons who would not be in the water when the lifeboat is flooded (water level less than 500 mm above seat pan) should be placed in the normal seating positions

of such persons with their centre of gravity approximately 300 mm above the seat pan. Weights representing persons who would be partly submerged in the water when the lifeboat is flooded (water level between 0 and 500 mm above the seat pan) should additionally have an approximate density of 1 kg/dm³ (for example water ballast containers) to represent a volume similar to a human body."

20 Subparagraph .1 of paragraph 6.9.4 is replaced by the following:

".1 a force equal to 25% of the safe working load of the hook should be applied to the hook in the lengthwise direction of the boat at an angle of 45° to the vertical. This test should be conducted in the aftward as well as the forward direction;"

21 Subparagraph .3 of paragraph 6.9.4 is replaced by the following:

".3 a force equal to the safe working load of the hook should be applied to the hook in a direction half-way between the positions of tests 1 and 2 (i.e. 45° to the longitudinal axis of the boat in plan view) at an angle of 33° to the vertical. This test should be conducted in four positions.

There should be no damage to the hook as a result of this test, and in the case of a waterborne test, there should be no damage to the lifeboat or its equipment."

22 Paragraph 6.10.1 is replaced by the following:

"6.10.1 The lifeboat should be loaded with weights equal to the mass of its equipment and the number of persons for which the lifeboat is to be approved. The engine should be started and the lifeboat manoeuvred for a period of at least 4 h to demonstrate satisfactory operation. The lifeboat should be run at a speed of not less than 6 knots for a period which is sufficient to ascertain the fuel consumption and to establish that the fuel tank has the required capacity. The maximum towing force of the lifeboat should be determined. This information should be used to determine the largest fully loaded liferaft the lifeboat can tow at 2 knots. The fitting designated for towing other craft should be secured to a stationary object by a tow rope. The engine should be operated ahead at full speed for a period of at least 2 min, and the towing force measured and recorded. There should be no damage to the towing fitting or its supporting structure. The maximum towing force of the lifeboat should be recorded on the type approval certificate."

23 Paragraph 6.15 is replaced by the following:

"**6.15 Air supply test for lifeboats with a self-contained air support system**

All entrances and openings of the lifeboat should be closed, and the air supply to the inside of the lifeboat turned on to the design air pressure. The engine should then be run at revolutions necessary to achieve full speed with the fully loaded boat including all persons and with the sprinkler system in use for a period of 5 min, stopped for 30 s, then restarted for a total running time of 10 min. During this time the atmospheric pressure within the enclosure should be continuously monitored to ascertain that a small positive air pressure is maintained within the lifeboat and to confirm that noxious gases cannot enter. The internal air pressure should never fall below the outside atmospheric pressure, nor should it exceed outside atmospheric pressure by more than 20 hPa during the test. It

should be ascertained, by starting the engine with air supply turned off, that when the air supply is depleted, automatic means are activated to prevent a dangerous underpressure of more than 20 hPa being developed within the lifeboat."

7 RESCUE BOATS AND FAST RESCUE BOATS

24 Paragraph 7.1.2 is replaced by the following:

"7.1.2 The maximum towing force of the rescue boat should be determined. This information should be used to determine the largest fully loaded liferaft the rescue boat can tow at two knots. The fitting designated for towing other craft should be secured to a stationary object by a tow rope. The engine should be operated ahead at full speed for a period of at least 2 min, and the towing force measured and recorded. There should be no damage to the towing fitting or its supporting structure. The maximum towing force of the rescue boat should be recorded on the type approval certificate."

25 In paragraph 7.1.3, in the second sentence, the words "on a stretcher of similar dimensions to those shown in figure 4" are inserted between the words "lie down" and "and the others" and the following figure is inserted after the paragraph:

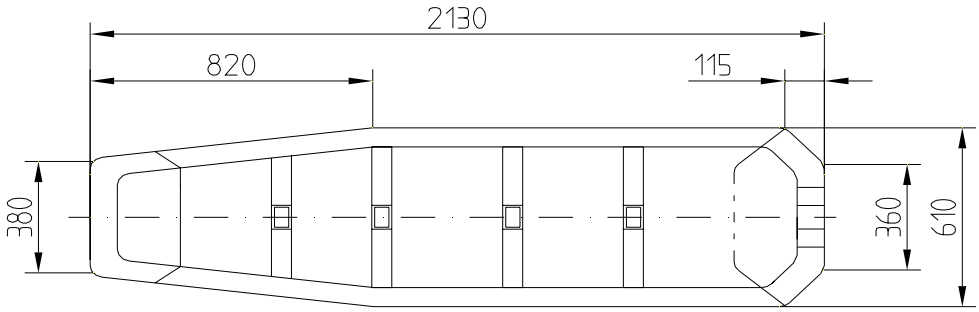

Figure 4 – *Stretcher dimensions (mm)*

26 In paragraph 7.1.7, the word "rigid" in the first sentence is deleted and the following text is added at the end of the paragraph:

"In the case of fast rescue boats which are not self-righting, the engine should be running in neutral position and, after stopping automatically or by the helmsman's emergency release switch when inverted, it should be easily restarted and run for 30 min after the rescue boat has returned to the upright position. For rescue boats with inboard engines, the test without engine and fuel is not applicable."

27 In the chapeau of paragraph 7.2.14, the words "to the satisfaction of the Administration" are replaced by the following:

"and comply with the requirements of an international standard acceptable to the Organization*:"

---

* Refer to the recommendations of the International Organization for Standardization, in particular publication ISO 15372 *Ships and marine technology – Inflatable rescue boats – Coated fabrics for inflatable chambers*.

28 The following text is added at the end of paragraph 7.4.1:

"In the case of open fast rescue boats, the self-righting test should only be done in the light condition, and 6.14.1.1, 6.14.3, 6.14.4, and 6.14.5 are not applicable. With regard to 6.14.2, a boat fitted with a helmsman's emergency release switch should be considered to be arranged to stop automatically when inverted."

29 The following new paragraph 7.7.11 is added after existing paragraph 7.7.10:

"*Engine inversion test (for engines destined for fast rescue boats only)*

7.7.11 The engine and its fuel tank should be mounted on a frame that is arranged to rotate about an axis equivalent to the longitudinal axis of the boat at the height of the boat transom. The propeller should be in a water basin to the height of the cavitation plate. The engine should then be subjected to the test procedure specified in paragraphs 6.14.7.1 through 6.14.7.13, and then dismantled for examination. With regard to 6.14.7.9, the engine should be stopped automatically or by the helmsman's emergency release switch when inverted. During these tests, the engine should not overheat or fail to operate or leak more than 250 ml of oil during any one inversion. When examined after being dismantled the engine, should show no evidence of overheating or excessive wear."

8 LAUNCHING AND EMBARKATION APPLIANCES

30 In paragraph 8.1.1, the following new sentence is inserted between the existing fifth and sixth sentences:

"The launching ramp and its connection to the release mechanism should be subjected to a static proof load of 2.2 times the maximum working load."

10 POSITION-INDICATING LIGHTS FOR LIFE-SAVING APPLIANCES

31 In the first sentence of paragraph 10.1.2, the word "sea-activated" is replaced by the words "seawater cell".

32 In the first sentence of paragraph 10.1.3, the word "dry-activated" is replaced by the words "dry cell" and the last sentence is replaced by the following:

"The interior lights should provide an arithmetic mean luminous intensity of not less than 0.5 cd when measured over the entire upper hemisphere to permit reading of survival instructions and equipment instructions for a period of not less than 12 h."

33 Paragraph 10.3.3 is replaced by the following:

"10.3.3 One light attached to a lifejacket should be subjected to a drop test from 4.5 m as prescribed in 2.8.8. The light should not suffer damage, should not be dislodged from the lifejacket and should be switched on and seen to be illuminated and conspicuous whilst the test subject is still in the water."

34 In paragraph 10.4.7, the words "IEC 945: 3rd edition (Nov.1996)" are replaced by the words "IEC 60945:2002" in the two places they appear.

11 HYDROSTATIC RELEASE UNITS

35 The following new subparagraph .6 is added after paragraph 11.2.5:

".6 *Solar radiation test*
One unit should be subjected to a solar radiation test to paragraph 8.10 of IEC 60945:2002.

Note: The solar radiation test may be waived where the manufacturer is able to produce evidence that the materials employed will satisfy the test, i.e., UV stabilized."

PART 2
PRODUCTION AND INSTALLATION TESTS

5 SURVIVAL CRAFT

36 The following new paragraph 5.3.4 is added after existing paragraph 5.3.3:

"5.3.4 The connection of each release gear which is fixed to the boat should be subjected to a load equal to the weight of the boat with its full complement of persons and equipment (or two times the weight of the boat in the case of single fall systems). There should be no damage to the release gear or its connection to the boat."

6 LAUNCHING AND STOWAGE ARRANGEMENTS

37 In paragraph 6.1.1, the following new sentence is inserted between the existing first and second sentences:

"For a free-fall lifeboat launching appliance, each launching ramp and its connection to the release mechanism should be tested with a static load of 2.2 times the working load."

38 The heading "Installation tests" is inserted after paragraph 6.1.1.

39 The last sentence of paragraph 6.1.3 is replaced by the following:

"A person should then board the survival craft or rescue boat and perform a test of the launching operation from within the boat."

APPENDIX 1
ADULT REFERENCE TEST DEVICE (RTD) DESIGN AND CONSTRUCTION

40 In paragraph 2.1.3, the figure “155.6” is replaced by the figure “149”.

41 In the appendix of Appendix 1, in the second row of table 1, the figures “103.5”, “46.5” and “150” are replaced by the figures “103”, “46” and “149” respectively.

42 In the appendix of Appendix 1, in the second row of table 2, the figures “17.75”, “51.75” and “18.5” are replaced by the figures “17.5”, “51.5” and “18” respectively, in all places they appear.

***

ANNEX 13

RESOLUTION MSC.227(82)

(adopted on 8 December 2006)

ADOPTION OF AMENDMENTS TO THE PROTOCOL OF 1988 RELATING TO THE INTERNATIONAL CONVENTION FOR THE SAFETY OF LIFE AT SEA, 1974

THE MARITIME SAFETY COMMITTEE,

RECALLING Article 28(b) of the Convention on the International Maritime Organization concerning the functions of the Committee,

RECALLING FURTHER article VIII(b) of the International Convention for the Safety of Life at Sea (SOLAS), 1974 (hereinafter referred to as "the Convention") and article VI of the Protocol of 1988 relating to the Convention (hereinafter referred to as "the 1988 SOLAS Protocol") concerning the procedure for amending the 1988 SOLAS Protocol,

HAVING CONSIDERED, at its eighty-second session, amendments to the 1988 SOLAS Protocol proposed and circulated in accordance with article VIII(b)(i) of the Convention and article VI of the 1988 SOLAS Protocol,

1. ADOPTS, in accordance with article VIII(b)(iv) of the Convention and article VI of the 1988 SOLAS Protocol, amendments to the 1988 SOLAS Protocol, the text of which is set out in the Annex to the present resolution;

2. DETERMINES, in accordance with article VIII(b)(vi)(2)(bb) of the Convention and article VI of the 1988 SOLAS Protocol, that the said amendments shall be deemed to have been accepted on 1 January 2008, unless, prior to that date, more than one third of the Parties to the 1988 SOLAS Protocol or Parties the combined merchant fleets of which constitute not less than 50% of the gross tonnage of the world's merchant fleet, have notified their objections to the amendments;

3. INVITES the Parties concerned to note that, in accordance with article VIII(b)(vii)(2) of the Convention and article VI of the 1988 SOLAS Protocol, the amendments shall enter into force on 1 July 2008, upon their acceptance in accordance with paragraph 2 above;

4. REQUESTS the Secretary-General, in conformity with article VIII(b)(v) of the Convention and article VI of the 1988 SOLAS Protocol, to transmit certified copies of the present resolution and the text of the amendments contained in the Annex to all Parties to the 1988 SOLAS Protocol;

5. FURTHER REQUESTS the Secretary-General to transmit copies of this resolution and its Annex to Members of the Organization, which are not Parties to the 1988 SOLAS Protocol.

ANNEX

AMENDMENTS TO THE PROTOCOL OF 1988 RELATING TO THE INTERNATIONAL CONVENTION FOR THE SAFETY OF LIFE AT SEA, 1974

APPENDIX
MODIFICATIONS AND ADDITIONS TO THE APPENDIX TO THE ANNEX TO THE INTERNATIONAL CONVENTION FOR THE SAFETY OF LIFE AT SEA, 1974

Record of Equipment for the Passenger Ship Safety Certificate (Form P)

1 In the Record of Equipment for the Passenger Ship Safety Certificate (Form P), in section 5, the following new item 4.2 is inserted after item 4:

"4.2 Long-range identification and tracking system",

and item 4 (Automatic identification system (AIS)) is renumbered as item 4.1.

Record of Equipment for the Cargo Ship Safety Equipment Certificate (Form E)

2 In the Record of Equipment for the Cargo Ship Safety Equipment Certificate (Form E), in section 3, the following new item 4.2 is inserted after item 4:

"4.2 Long-range identification and tracking system",

and item 4 (Automatic identification system (AIS)) is renumbered as item 4.1.

Record of Equipment for the Cargo Ship Safety Certificate (Form C)

3 In the Record of Equipment for the Cargo Ship Safety Certificate (Form C), in section 5, the following new item 4.2 is inserted after item 4:

"4.2 Long-range identification and tracking system",

and item 4 (Automatic identification system (AIS)) is renumbered as item 4.1.