INTERNATIONAL MARITIME ORGANIZATION

IMO

E

SUB-COMMITTEE ON FIRE PROTECTION
53rd session
Agenda item 23

FP 53/23
27 March 2009
Original: ENGLISH

# REPORT TO THE MARITIME SAFETY COMMITTEE

## Table of contents


| Section | | Page |
|---|---|---|
| 1 | GENERAL | 4 |
| 2 | DECISIONS OF OTHER IMO BODIES | 5 |
| 3 | PERFORMANCE TESTING AND APPROVAL STANDARDS FOR FIRE SAFETY SYSTEMS | 6 |
| 4 | COMPREHENSIVE REVIEW OF THE FIRE TEST PROCEDURES CODE | 13 |
| 5 | MEASURES TO PREVENT EXPLOSIONS ON OIL AND CHEMICAL TANKERS TRANSPORTING LOW-FLASH POINT CARGOES | 19 |
| 6 | FIRE RESISTANCE OF VENTILATION DUCTS | 24 |
| 7 | GUIDELINES FOR DRAINAGE SYSTEMS IN CLOSED VEHICLE AND RO-RO SPACES AND SPECIAL CATEGORY SPACES | 25 |
| 8 | CLARIFICATION OF SOLAS CHAPTER II-2 REQUIREMENTS REGARDING INTERRELATION BETWEEN CENTRAL CONTROL STATION AND SAFETY CENTRE | 27 |
| 9 | RECOMMENDATION ON EVACUATION ANALYSIS FOR NEW AND EXISTING PASSENGER SHIPS | 29 |
| 10 | MEASURES TO PREVENT FIRES IN ENGINE-ROOMS AND CARGO PUMP-ROOMS | 30 |
| 11 | DEVELOPMENT OF PROVISIONS FOR GAS-FUELLED SHIPS | 31 |
| 12 | CONSIDERATION OF IACS UNIFIED INTERPRETATIONS | 32 |
| 13 | FIXED HYDROCARBON GAS DETECTION SYSTEMS ON DOUBLE-HULL OIL TANKERS | 34 |


For reasons of economy, this document is printed in a limited number. Delegates are kindly asked to bring their copies to meetings and not to request additional copies.

CLIMATE CHANGE: A CHALLENGE FOR IMO TOO!

| | | |
|---|---|---|
| 14 | HARMONIZATION OF THE REQUIREMENTS FOR THE LOCATION OF ENTRANCES, AIR INLETS AND OPENINGS IN THE SUPERSTRUCTURES OF TANKERS | 36 |
| 15 | AMENDMENTS TO SOLAS CHAPTER II-2 RELATED TO THE RELEASING CONTROLS AND MEANS OF ESCAPE FOR SPACES PROTECTED BY FIXED CARBON DIOXIDE SYSTEMS | 37 |
| 16 | MEANS OF ESCAPE FROM MACHINERY SPACES | 38 |
| 17 | REVIEW OF FIRE PROTECTION REQUIREMENTS FOR ON-DECK CARGO AREAS | 38 |
| 18 | EXPLANATORY NOTES FOR THE APPLICATION OF THE SAFE RETURN TO PORT REQUIREMENTS | 39 |
| 19 | ANALYSIS OF FIRE CASUALTY RECORDS | 41 |
| 20 | WORK PROGRAMME AND AGENDA FOR FP 54 | 42 |
| 21 | ELECTION OF CHAIRMAN AND VICE-CHAIRMAN FOR 2010 | 44 |
| 22 | ANY OTHER BUSINESS | 44 |
| 23 | ACTION REQUESTED OF THE COMMITTEES | 49 |


**LIST OF ANNEXES**


ANNEX 1 DRAFT MSC CIRCULAR ON REVISED GUIDELINES FOR THE PERFORMANCE AND TESTING CRITERIA, AND SURVEYS OF FOAM CONCENTRATES FOR FIXED FIRE-EXTINGUISHING SYSTEMS

ANNEX 2 DRAFT AMENDMENT TO SOLAS REGULATION II-2/7.4.1

ANNEX 3 DRAFT AMENDMENT TO CHAPTER 9 OF THE FSS CODE

ANNEX 4 DRAFT AMENDMENT TO CHAPTER 10 OF THE FSS CODE

ANNEX 5 DRAFT MSC CIRCULAR ON GUIDANCE FOR APPLICATION OF THE REVISED CHAPTER 5 OF THE FSS CODE, AS AMENDED BY RESOLUTION MSC.206(81)

ANNEX 6 DRAFT AMENDMENT TO CHAPTER 1 OF THE FSS CODE

ANNEX 7 DRAFT MSC CIRCULAR ON APPLICATION OF SOLAS REGULATION II-2/10 AND CHAPTER 12 OF THE FSS CODE RELATED TO EMERGENCY FIRE PUMP CAPACITY

ANNEX 8 DRAFT MSC RESOLUTION ON AMENDMENTS TO THE REVISED GUIDELINES FOR APPROVAL OF SPRINKLER SYSTEMS EQUIVALENT TO THAT REFERRED TO IN SOLAS REGULATION II-2/12 (RESOLUTION A.800(19))

ANNEX 9 DRAFT MSC CIRCULAR ON GUIDELINES FOR THE APPROVAL OF FIXED DRY CHEMICAL POWDER FIRE-EXTINGUISHING SYSTEMS FOR THE PROTECTION OF SHIPS CARRYING LIQUEFIED GASES IN BULK

ANNEX 10 DRAFT MSC CIRCULAR ON GUIDELINES ON DETERMINING THE NO OBSERVED ADVERSE EFFECT LEVEL (NOAEL) AND LOWEST OBSERVED ADVERSE EFFECT LEVEL (LOAEL) VALUES FOR HALOCARBON FIRE-EXTINGUISHING AGENTS

ANNEX 11 DRAFT MSC CIRCULAR ON APPLICATION FOR EXISTING APPROVALS ACCORDING TO THE REVISED GUIDELINES FOR THE APPROVAL OF EQUIVALENT FIXED GAS FIRE-EXTINGUISHING SYSTEMS, AS REFERRED TO IN SOLAS 74, FOR MACHINERY SPACES AND CARGO PUMP-ROOMS (MSC/CIRC.848)

ANNEX 12 DRAFT MSC CIRCULAR ON GUIDELINES FOR THE MAINTENANCE AND INSPECTIONS OF FIXED CARBON DIOXIDE FIRE-EXTINGUISHING SYSTEMS

ANNEX 13 DRAFT MSC CIRCULAR ON RECOMMENDATION FOR THE EVALUATION OF FIRE PERFORMANCE AND APPROVAL OF LARGE FIRE DOORS

ANNEX 14 DRAFT MSC RESOLUTION ON THE ADOPTION OF THE INTERNATIONAL CODE FOR THE APPLICATION OF FIRE TEST PROCEDURES, 2010 (2010 FTP CODE)

ANNEX 15 DRAFT AMENDMENTS TO SOLAS CHAPTER II-2

ANNEX 16 DRAFT MSC CIRCULAR ON GUIDELINES FOR THE DRAINAGE OF FIRE-FIGHTING WATER FROM CLOSED VEHICLE AND RO-RO SPACES AND SPECIAL CATEGORY SPACES OF PASSENGER AND CARGO SHIPS

ANNEX 17 DRAFT MSC CIRCULAR ON GUIDELINES FOR MEASURES TO PREVENT FIRES IN ENGINE-ROOMS AND CARGO PUMP-ROOMS

ANNEX 18 DRAFT MSC CIRCULAR ON UNIFIED INTERPRETATIONS OF SOLAS CHAPTER II-2

ANNEX 19 DRAFT AMENDMENT TO SOLAS REGULATION II-2/4.5.7

ANNEX 20 DRAFT NEW CHAPTER 16 OF THE FSS CODE

ANNEX 21 PROPOSED REVISED WORK PROGRAMME OF THE SUB-COMMITTEE AND PROVISIONAL AGENDA FOR FP 54

ANNEX 22 STATUS OF THE PLANNED OUTPUTS OF THE HIGH-LEVEL ACTION PLAN OF THE ORGANIZATION AND PRIORITIES FOR THE 2008-2009 BIENNIUM RELATING TO THE SUB-COMMITTEE'S WORK

# 1 GENERAL

## Introduction

1.1 The Sub-Committee held its fifty-third session from 16 to 20 February 2009 under the chairmanship of Mr. J.C. Cubisino (Argentina). The Vice-Chairman, Mr. C. Abbate (Italy), was also present.

1.2 The session was attended by delegations from the following Member Governments:

ALGERIA
ARGENTINA
BAHAMAS
BRAZIL
CANADA
CHILE
CHINA
COLOMBIA
COOK ISLANDS
CROATIA
CUBA
CYPRUS
DEMOCRATIC PEOPLE'S REPUBLIC OF KOREA
DENMARK
DOMINICAN REPUBLIC
ECUADOR
EGYPT
FINLAND
FRANCE
GERMANY
GHANA
GREECE
INDONESIA
IRAN (ISLAMIC REPUBLIC OF)
ITALY
JAPAN
LATVIA
LIBERIA
MARSHALL ISLANDS
MEXICO
MOROCCO
NETHERLANDS
NIGERIA
NORWAY
PANAMA
PAPUA NEW GUINEA
PERU
PHILIPPINES
POLAND
PORTUGAL
REPUBLIC OF KOREA
RUSSIAN FEDERATION
SAUDI ARABIA
SINGAPORE
SOUTH AFRICA
SPAIN
SWEDEN
SYRIAN ARAB REPUBLIC
THAILAND
TURKEY
TUVALU
UKRAINE
UNITED KINGDOM
UNITED STATES
URUGUAY
VANUATU

and by the following Associate Members of IMO:

HONG KONG, CHINA
FAROE ISLANDS (DENMARK)

1.3 The session was also attended by representatives from the following intergovernmental organizations:

EUROPEAN COMMISSION (EC)
MARITIME ORGANIZATION FOR WEST AND CENTRAL AFRICA (MOWCA)

1.4 The session was also attended by observers from the following non-governmental organizations:

INTERNATIONAL CHAMBER OF SHIPPING (ICS)
INTERNATIONAL ORGANIZATION FOR STANDARDIZATION (ISO)
INTERNATIONAL UNION OF MARINE INSURANCE (IUMI)
INTERNATIONAL TRANSPORT WORKERS FEDERATION (ITF)
INTERNATIONAL RADIO-MARITIME COMMITTEE (CIRM)
INTERNATIONAL ASSOCIATION OF PORTS AND HARBORS (IAPH)
INTERNATIONAL ASSOCIATION OF CLASSIFICATION SOCIETIES (IACS)
OIL COMPANIES INTERNATIONAL MARINE FORUM (OCIMF)
INTERNATIONAL ASSOCIATION OF DRILLING CONTRACTORS (IADC)
INTERNATIONAL FEDERATION OF SHIPMASTERS' ASSOCIATION (IFSMA)
INTERNATIONAL ASSOCIATION OF INDEPENDENT TANKER OWNERS (INTERTANKO)
SOCIETY OF INTERNATIONAL GAS TANKER AND TERMINAL OPERATORS LIMITED (SIGTTO)
CRUISE LINES INTERNATIONAL ASSOCIATION (CLIA)
INSTITUTE OF MARINE ENGINEERING, SCIENCE AND TECHNOLOGY (IMarEST)
INTERNATIONAL PARCEL TANKERS ASSOCIATION (IPTA)
THE ROYAL INSTITUTION OF NAVAL ARCHITECTS (RINA)

**Secretary-General's opening address**

1.5 The Secretary-General welcomed participants and delivered his opening address, the full text of which is reproduced in document FP 53/INF.8.

**Chairman's remarks**

1.6 In responding, the Chairman thanked the Secretary-General for his words of encouragement and stated that his advice and requests would be given every consideration in the deliberations of the Sub-Committee.

**Adoption of the agenda and related matters**

1.7 The Sub-Committee adopted the agenda (FP 53/1) and agreed to be guided in its work, in general, by the annotations contained in document FP 53/1/1. The agenda, as adopted, with the list of documents considered under each agenda item, is set out in document FP 53/INF.9.

## 2 DECISIONS OF OTHER IMO BODIES

**General**

2.1 The Sub-Committee noted the decisions and comments pertaining to its work made by BLG 12, DE 51, STW 39, MSC 84, FSI 16, NAV 54, SLF 51, DSC 13, MEPC 58 and MSC 85, as reported in documents FP 53/2 and FP 53/2/1, and took them into account in its deliberations when dealing with relevant agenda items.

**Applications of the Committee's Guidelines**

2.2 In considering the outcome of MSC 84, the Sub-Committee noted that the Committee had recalled that MSC 83, having considered the report of the 2007 Chairmen's meeting, noted that the Chairmen had reiterated the recommendations of its last meeting, which MSC 83 and MEPC 57 had agreed to, that:

.1 intersessional working groups and technical groups should not be held at the same time as Committee or sub-committee meetings; and

.2 splinter groups of a working group, if established, should meet outside normal working hours,

and that MSC 84 had noted the recommendation of the aforementioned meeting that the agenda management procedures specified in the Committees' Guidelines should be strictly adhered to.

2.3 The Sub-Committee further noted that MSC 84, having noted MEPC 57's concurrent decisions, had approved the revised Guidelines on the organization and method of work, which had been disseminated by means of circular MSC-MEPC.1/Circ.2, superseding MSC-MEPC.1/Circ.1.

## 3 PERFORMANCE TESTING AND APPROVAL STANDARDS FOR FIRE SAFETY SYSTEMS

**General**

3.1 The Sub-Committee recalled that, at FP 52, it had approved the revised action plan identifying the priorities, timeframes and objectives for each priority category prepared by the working group established on the matter (FP 52/WP.2, annex 8).

3.2 The Sub-Committee also recalled that, at FP 52, it had re-established the Correspondence Group on Performance Testing and Approval Standards for Fire Safety Systems and approved terms of reference, as set out in paragraphs 3.35 and 3.36 of document FP 52/21, and had instructed the group to submit its report to FP 53.

3.3 With regard to the outcome of MSC 85, the Sub-Committee noted that the Committee had considered document MSC 85/23/2 (Sweden), proposing to develop appropriate guidance on the method to determine the No Observed Adverse Effect Level (NOAEL) and Lowest Observed Adverse Effect Level (LOAEL), had agreed to expand the existing Sub-Committee's work programme item on "Performance testing and approval standards for fire safety systems" to develop the above guidance, and had extended the target completion date of the expanded item to 2011.

3.4 The Sub-Committee had for its consideration under this agenda item documents submitted by Norway (FP 53/3/4), Sweden (FP 53/3/3), the United States (FP 53/3 and FP 53/3/1), IACS (FP 53/2) and ISO (FP 53/INF.7). In the context of this item, the Sub-Committee also considered document FP 53/12/4 submitted by IACS.

**Report of the working group (part 2) established at FP 52**

***General***

3.5 The Sub-Committee considered part 2 of the report of the Working Group on Performance Testing and Approval Standards for Fire Safety Systems established at FP 52

(FP 53/3) and, having approved it in general, noted that the group's report had been considered in detail by the correspondence group established at FP 52 (FP 53/3/1).

***Consideration of medium-term priority categories***

3.6 The Sub-Committee noted that that group had reviewed the proposed medium-term priorities contained in annex 8 to document FP 52/WP.2, and had agreed to add consideration of fixed dry chemical powder fire-extinguishing systems for gas carriers and high-expansion foam systems using inside air for the protection of ro-ro and cargo spaces to the list of priorities (FP 53/3, annex 5).

**Report of the correspondence group**

3.7 The Sub-Committee considered the report of the Correspondence Group on Performance Testing and Approval Standards for Fire Safety Systems (FP 53/3/1) together with the documents referred to in paragraph 3.4 and, having approved it, in general:

.1 noted the group's concern regarding the application of the revised chapter 5 of the FSS Code, as adopted by resolution MSC.206(81), and agreed that a draft MSC circular should be prepared to provide guidance to clarify that the revised chapter 5 should apply only to ships constructed on or after 1 July 2010;

.2 agreed that a draft amendment to chapter 1 of the FSS Code should be prepared in order to ensure that the application of any future amendments to the Code is unambiguous; and

.3 considered whether the interpretations on fixed-gas fire-extinguishing systems contained in MSC/Circ.1120 should be included in any future amendments to chapter 5 of the FSS Code and decided that the working group to be established should further consider the matter and advise the Sub-Committee accordingly, taking into account that this exercise could be time consuming.

**Guidelines for maintenance and inspections of fixed $CO_2$ systems**

3.8 The delegation of the Netherlands requested clarification regarding the draft Guidelines for maintenance and inspections of fixed $CO_2$ systems, as agreed in principle by FP 50 (FP 50/21, paragraph 4.21). The delegation stated that the report of FP 51 records the Sub-Committee's decision to invite the STW Sub-Committee to comment on the draft Guidelines and that the report of STW 39 (STW 39/12) does not contain comments on this issue and, STW 40 did not consider the draft Guidelines. Additionally, the delegation of the Netherlands requested clarification on the finalization of the draft Guidelines.

3.9 In light of the above request, the Sub-Committee noted that paragraph 3.15 of document FP 51/19 stated that the STW Sub-Committee might need to be invited to comment on the draft Guidelines after finalization and, to date, no action has yet been taken in this regard. In considering the request on the finalization of the draft Guidelines, the Sub-Committee noted that FP 50 had agreed, in principle, to the draft Guidelines for maintenance and inspections of fixed $CO_2$ systems (FP 50/WP.2, annex 4), with a view to finalizing them at this session (see paragraph 3.36).

**Minimum required capacity of the emergency fire-pump**

3.10 In considering document FP 53/3/2 (IACS), seeking clarification concerning the minimum required capacity of the emergency fire pump when it is arranged to provide additional services beyond the basic service as required by the FSS Code, the Sub-Committee agreed to refer the

document to the working group for further consideration under its work on the short- and medium-term priorities (FP 52/WP.2, annex 8). In this regard, the group was instructed to take into account SOLAS regulation II-2/10.2.2.4.2 regarding the requirement for two jets of water.

**Guidance on the method to determine the NOAEL and LOAEL**

3.11 The Sub-Committee considered (see also paragraph 3.3) document FP 53/3/3 (Sweden), proposing the development of guidance on the method to determine the No Observed Adverse Effect Level (NOAEL) and Lowest Observed Adverse Effect Level (LOAEL), which is referred to in the amendments to the Revised Guidelines for approval of equivalent fixed gas fire-extinguishing systems, as referred to in SOLAS 74, for machinery spaces and cargo pump-rooms (MSC/Circ.848), approved by MSC 84 by means of MSC.1/Circ.1267, and decided to refer the document to the working group for further consideration under its work on the long-term priorities, identified in annex 8 to document FP 52/WP.2. In this context, having noted the comments by the delegation of the Ukraine regarding the need to avoid duplicating the work of other international organizations, the Sub-Committee agreed that any standards to be developed should be within the purview of IMO.

**Incident during a test performed in accordance with MSC/Circ.1165**

3.12 In considering document FP 53/3/4 (Norway), containing information on an explosion of an engine mock-up during a test of a water-based fire-extinguishing system according to the Revised Guidelines for the approval of equivalent water-based fire-extinguishing systems for machinery spaces and cargo pump-rooms (MSC/Circ.1165), the Sub-Committee noted the information and agreed that the working group should prepare an appropriate FP circular (see paragraph 3.33).

**Update of standardization work at ISO**

3.13 In considering document FP 53/INF.7 (ISO), informing the Sub-Committee of the ISO work in ISO/TC 8/SC 1 (Ships and marine technology, Sub-Committee on Lifesaving and Fire Protection) of interest to the Sub-Committee, including the revision of various standards related to the work on the Performance testing and approval standards for fire safety systems, the Sub-Committee noted the information provided, in particular that standard ISO 15371:2000 had been updated, and agreed to consider, at FP 54, amending the footnote to SOLAS regulation II-2/10.6.4 to refer to the new edition of the standard.

**Establishment of the working group**

3.14 Recalling its relevant decision at FP 52 regarding a working group, the Sub-Committee established the Working Group on Performance Testing and Approval Standards and instructed it, taking into account the comments and decisions made in plenary, to:

.1 continue work on the short- and medium-term priorities identified in annex 8 to document FP 52/WP.2, taking into account the report of the working group established at FP 52 (FP 53/3), the report of the correspondence group (FP 53/3/1) and documents FP 53/3/2 (IACS) and FP 53/3/4 (Norway) and, in particular, to:

.1.1 finalize the Revised Guidelines for the performance and testing criteria, and surveys of foam concentrates for fixed fire-extinguishing systems (FP 53/3/1, annex 7),

.1.2 finalize the draft amendments to SOLAS regulation II-2/7.4.1 (FP 53/3/1, annex 1),

.1.3 finalize the draft revised chapters 9 and 10 of the FSS Code (FP 53/3/1, annexes 1 and 2),

.1.4 further consider the draft amendments to chapter 1 of the FSS Code regarding the application of resolution MSC.206(81) (FP 53/3/1, annex 6), and, if it is appropriate, prepare a draft MSC circular on Guidance on the application of the revised chapter 5 of the FSS Code for consideration by the Sub-Committee, with a view to approval at MSC 86,

.1.5 consider whether the draft amendments to chapter 5 of the FSS Code should include the interpretations contained in MSC/Circ.1120, in the context of the group's workload, and

.1.6 prepare draft amendments to resolution MSC.265(84), in order to clarify its application, taking into account the corrigenda to the aforementioned resolution (MSC 84/24/Add.2/Corr.1) and document FP 53/12/4 (IACS);

.2 continue work on the long-term priorities identified in annex 8 to document FP 52/WP.2, taking into account the report of the working group established at FP 52 (FP 53/3), the report of the correspondence group (FP 53/3/1) and document FP 53/3/3 (Sweden);

.3 update the Revised plan for the harmonization, or new development, of performance testing and approval standards for fire safety systems contained in annex 8 to document FP 52/WP.2, taking into account the progress made to date, and prepare a revised plan identifying the priorities, timeframes and objectives for each priority category; and

.4 consider whether there is a need to re-establish the correspondence group and, if so, prepare the terms of reference for consideration by the Sub-Committee.

3.15 The Sub-Committee recalled that the group had been also instructed, under agenda item 7 (Guidelines for drainage systems in closed vehicle and ro-ro spaces and special category spaces), to finalize the draft Guidelines for the drainage of fire-fighting water from closed vehicle and ro-ro spaces and special category spaces of passenger and cargo ships, taking into account the report of the correspondence group (FP 53/7) (see paragraph 7.8).

**Report of the working group**

3.16 Having received the report of the working group (FP 53/WP.1), the Sub-Committee approved it in general and took action as outlined hereunder.

***Performance and testing criteria and surveys of foam concentrates***

3.17 The Sub-Committee, having noted the group's consideration on the draft Revised Guidelines for the performance and testing criteria, and surveys of foam concentrates for fixed fire-extinguishing systems (FP 53/3/1, annex 7), in particular on the reference test and periodic retest for protein-based alcohol-resistant foam concentrates, agreed to the draft Revised Guidelines for the performance and testing criteria, and surveys of foam concentrates for fixed fire-extinguishing systems and the associated draft MSC circular, set out in annex 1, for submission to MSC 86 for approval.

***Amendments to SOLAS regulation II-2/7.4.1 and chapter 9 of the FSS Code***

3.18 In agreeing to the draft amendments to SOLAS regulation II-2/7.4.1 and chapter 9 of the FSS Code concerning fixed fire detection and fire alarm systems (FP 53/3/1, annex 1), the Sub-Committee, recognizing that the recent amendments to chapter 9 of the FSS Code, as adopted by resolution MSC.217(82) (annex 2) are expected to enter into force on 1 July 2010 and, consequently, chapter 9 of the FSS Code could not be further amended before the aforementioned date, agreed to the draft amendments to SOLAS regulation II-2/7.4.1, as set out in annex 2, and to chapter 9 of the FSS Code, as set out in annex 3, for submission to MSC 87 for approval and subsequent adoption.

***Amendments to chapter 10 of the FSS Code***

3.19 Having considered the draft amendments to chapter 10 of the FSS Code concerning sample extraction smoke detection systems, prepared by the group based on annex 2 to document FP 53/3/1, the Sub-Committee agreed to the draft amendments to chapter 10 of the FSS Code, as set out in annex 4, for submission to MSC 86 for approval and subsequent adoption.

***Guidelines for high-expansion foam for the protection of machinery spaces, cargo pump-rooms, cargo spaces and vehicle, special category and ro-ro spaces***

3.20 With regard to the draft amendments to chapter 6 of the FSS Code concerning the matter related to the draft Guidelines for high-expansion foam for the protection of machinery spaces, cargo pump-rooms, cargo spaces and vehicle, special category and ro-ro spaces (FP 53/3/1, annex 3), the Sub-Committee noted that the group had agreed that the detailed test methods included in the draft revised chapter 6 of the FSS Code (FP 53/3/1, annex 3, appendices 1 to 4) should be divided into separate guidelines with only the principal requirements in the FSS Code, taking into account that detailed guidelines are not suitable for mandatory instruments, and decided to further consider the draft amendments to chapter 6 of the FSS Code through a correspondence group.

***Testing and approval of fixed inert gas fire-extinguishing systems for general cargo***

3.21 With regard to the draft Guidelines for the testing and approval of fixed inert gas fire-extinguishing systems for general cargo, as required by SOLAS regulation II-2/10.7.1 (FP 53/3/1, annex 5), the Sub-Committee, having noted the group's recommendation, decided to further consider the draft Guidelines through a correspondence group.

***Fixed gas and water-spraying fire-extinguishing systems for vehicle spaces and ro-ro spaces***

3.22 The Sub-Committee noted that the group, having considered the draft amendments to SOLAS regulation II-2/20 concerning fixed fire-extinguishing systems for vehicle spaces and ro-ro spaces and associated draft amendments to chapters 5 and 7 of the FSS Code (FP 53/3/1, annex 4), had decided that the design criteria and footnotes should be moved from SOLAS regulation II-2/20 to the appropriate chapters of the FSS Code.

3.23 Having noted the concerns of some delegations regarding the need for further consideration of the words "general cargo spaces" and "solid bulk cargoes" (FP 53/WP.1, annex 7, draft amendments to chapter 5, paragraph 2.2.1.7) and having recognized that the revised chapter 5 of the FSS Code, as amended by resolution MSC.206(81), is expected to enter into force on 1 July 2010 and, therefore, chapter 5 of the FSS Code could not be further amended before the above date, the Sub-Committee agreed, in principle, to the draft amendments to SOLAS regulation II-2/20, and to chapters 5 and 7 of the FSS Code (FP 53/WP.1, annexes 6 and 7) for further consideration with a view to finalization at FP 54.

***Application of the revised chapter 5 of the FSS Code, as adopted by resolution MSC.206(81)***

3.24 The Sub-Committee agreed to the draft MSC circular on Guidance for application of the revised chapter 5 of the FSS Code, as adopted by resolution MSC.206(81), set out in annex 5, for submission to MSC 86 for approval, to clarify that the revised chapter 5 of the FSS Code should apply only to ships constructed on or after 1 July 2010.

3.25 In this context, the Sub-Committee agreed to the draft amendments to chapter 1 of the FSS Code, in order to make it clear that amendments to the Code adopted after 1 July 2002 should, unless expressed otherwise, apply only to ships constructed on or after the date on which the amendments enter into force, as set out in annex 6, for submission to MSC 86 for approval and subsequent adoption.

***Consideration of MSC/Circ.1120 in relation to chapter 5 of the FSS Code***

3.26 Having noted that the group had considered whether the draft amendments to chapter 5 of the FSS Code should include the interpretations contained in MSC/Circ.1120, the Sub-Committee, recognizing that MSC/Circ.1120 includes not only interpretations of chapter 5 of the FSS Code but also interpretations of other chapters of the FSS Code and SOLAS, endorsed the group's decision to consider this matter as a long-term issue after finalizing other issues that have already been listed in the revised plan (see also paragraph 3.37).

***Application of SOLAS chapter II-2 and the FSS Code requirements for emergency fire pumps***

3.27 The Sub-Committee, having noted the group's consideration of document FP 53/3/2, seeking clarification of application of the requirements in SOLAS chapter II-2 with respect to determining the capacity of the emergency fire pump when it is arranged to provide additional services beyond the basic service as required by the FSS Code, agreed to the draft MSC circular on Application of SOLAS regulation II-2/10 and chapter 12 of the FSS Code related to emergency fire pump capacity, as set out in annex 7, for submission to MSC 86 for approval.

***Clarification on the implementation of resolution MSC.265(84)***

3.28 Having noted that the group had considered document FP 53/12/4, seeking clarification of the application of resolution MSC.265(84) on Amendments to the Revised Guidelines for approval of sprinkler systems equivalent to that referred to in SOLAS regulation II-2/12 (resolution A.800(19)), the Sub-Committee agreed to the draft Amendments to the Revised Guidelines for approval of sprinkler systems equivalent to that referred to in SOLAS regulation II-2/12 (resolution A.800(19)) and the associated draft MSC resolution, as set out in annex 8, for submission to MSC 86 for adoption.

***Fixed dry chemical powder fire-extinguishing systems***

3.29 The Sub-Committee, having noted the group's consideration on matters related to the approval of fixed dry chemical powder fire-extinguishing systems for gas carriers (FP 53/3/1, annex 8), agreed to the draft Guidelines for the approval of fixed dry chemical powder fire-extinguishing systems for the protection of ships carrying liquefied gases in bulk and the associated draft MSC circular, as set out in annex 9, for submission to MSC 86 for approval.

***Fixed deck foam systems***

3.30 The Sub-Committee noted that the group had considered the draft amendments to chapter 14 of the FSS Code concerning fixed deck foam systems (FP 53/3/1, annex 9), regarding the application

of fixed deck foam systems to oil tankers and chemical tankers, and that the group had agreed that the requirements for chemical tankers in SOLAS and the IBC Code are in need of revision and proposed that ships carrying flammable chemicals listed in chapters 17 and 18 of the IBC Code should be required to meet the higher IBC Code foam application rates regardless of flashpoint.

3.31 Subsequently, the Sub-Committee agreed, in principle, to the draft amendments to chapter 14 of the FSS Code and requested the Secretariat to forward the draft amendments as well as the outcome of the group's discussion (FP 53/WP.1, paragraphs 28 to 31 and annex 13) to the BLG Sub-Committee for comments before finalization.

***Guidelines on determining NOAEL and LOAEL values for halocarbon fire-extinguishing agents***

3.32 The Sub-Committee agreed to the draft Guidelines on determining the no observed adverse effect level (NOAEL) and lowest observed adverse effect level (LOAEL) values for halocarbon fire-extinguishing agents and the associated draft MSC circular, as set out in annex 10, for submission to MSC 86 for approval.

***Information on an explosion of an engine mock-up during test***

3.33 With regard to document FP 53/3/4, informing of the explosion hazard associated with the test procedure contained in the Revised Guidelines for the approval of equivalent water-based fire-extinguishing systems for machinery spaces and cargo pump-rooms (MSC/Circ.1165), the Sub-Committee approved FP.1/Circ.38 on Explosion of an engine mock-up during test to inform Member Governments and test laboratories of the incident, and, having requested the Secretariat to issue the circular, invited MSC 86 to endorse the action taken by the Sub-Committee.

***Consideration of IACS UI SC 216 on water-based fire-extinguishing systems***

3.34 The Sub-Committee, having noted that the group had considered additional information provided by the observer from IACS, as set out in annex 16 to document FP 53/WP.1, concerning UI SC 216 on water-based fire-extinguishing systems, agreed to further consider the issue through a correspondence group and decided to also refer the matter to the correspondence group established under agenda item 18 (Explanatory notes for the application of safe return to port requirements) (see paragraph 18.12).

***Application for existing approvals according to MSC/Circ.848***

3.35 Having considered the lack of clear direction with respect to the expiry dates for existing approvals issued in accordance with the Revised Guidelines for approval of equivalent fixed gas fire-extinguishing systems, as referred to in SOLAS 74, for machinery spaces and cargo pump-rooms (MSC/Circ.848), as amended by MSC.1/Circ.1267, the Sub-Committee agreed to the draft MSC circular on Application for existing approvals according to the Revised Guidelines for the approval of equivalent fixed gas fire-extinguishing systems, as referred to in SOLAS 74, for machinery spaces and cargo pump-rooms (MSC/Circ.848), as set out in annex 11, for submission to MSC 86 for approval.

***Maintenance and inspections of fixed carbon dioxide fire-extinguishing systems***

3.36 The Sub-Committee agreed to the draft MSC circular on Guidelines for maintenance and inspections of fixed carbon dioxide fire-extinguishing systems, as set out in annex 12, for submission to MSC 86 for approval.

***Revised plan of action***

3.37 The Sub-Committee approved the revised work plan for the development of performance testing and approval standards for fire safety systems, as contained in annex 19 to document FP 53/WP.1.

***Re-establishment of a correspondence group***

3.38 The Sub-Committee re-established the correspondence group, under the coordination of the United States*, and instructed the group (see also paragraphs 3.13 and 13.13), taking into account the relevant information contained in document FP 53/3/1 and the outcome of the working group outlined in its reports (FP 53/WP.1 and part 2), to:

.1 further consider the draft amendments to chapter 6 of the FSS Code, based on annex 3 to document FP 53/3/1;

.2 further consider the draft Guidelines for the testing and approval of fixed inert gas fire-extinguishing systems for general cargo as required by SOLAS regulation II-2/10.7.1, based on annex 5 to document FP 53/3/1;

.3 further consider matters related to IACS Unified Interpretation SC 216 on water-based fire-extinguishing systems (FP 53/WP.1, annex 16);

.4 further consider the medium- and long-term priority systems listed in annex 19 to document FP 53/WP.1; and

.5 submit a report to FP 54.

## 4 COMPREHENSIVE REVIEW OF THE FIRE TEST PROCEDURES CODE

### GENERAL

4.1 The Sub-Committee recalled that, at FP 52, the Sub-Committee had established the Working Group on Comprehensive Review of the Fire Test Procedures Code and, having approved the first part of its report, agreed to consider part 2 of the group's report at this session.

4.2 It was also recalled that, at FP 52, the Sub-Committee had re-established the Correspondence Group on Comprehensive Review of the Fire Test Procedures Code with the terms of reference set out in paragraph 4.30 of document FP 52/21, and instructed the group to submit its report to FP 53.

---

* **Coordinator**:
Mr. R. Eberly, P.E.
Commandant (CG-5214)
United States Coast Guard
2100 Second Street, SW
Washington, DC 20593-0001
United States of America
Tel: +1 202 372 1393
Fax: +1 202 372 1924
E-mail: Randall.Eberly@uscg.mil

**REPORT OF THE WORKING GROUP (PART 2) ESTABLISHED AT FP 52**

4.3 The Sub-Committee considered part 2 of the report of the Working Group on Comprehensive Review of the Fire Test Procedures Code established at FP 52 (FP 53/4 and FP 53/INF.4) and, having approved it in general, noted that the aforementioned correspondence group had considered the matters identified in the report of the working group during its deliberations.

**REPORT OF THE CORRESPONDENCE GROUP**

4.4 The Sub-Committee considered the report of the Correspondence Group on Comprehensive Review of the Fire Test Procedures Code (FP 53/4/1), together with documents FP 53/4/2 and FP 53/4/3 (Japan), FP 53/4/4 (Republic of Korea) and FP 53/4/5 (IACS) and, having approved it in general, agreed to refer the draft revised Fire Test Procedures Code and related fire test procedures to the working group referred to in paragraph 4.6 for further consideration.

**OTHER DOCUMENTS SUBMITTED**

4.5 Following consideration of documents:

.1 FP 53/4/2 (Japan), providing the results of the experimental tests of the plate thermometer for use of the furnace control in the FTP Code, annex 1, part 3, by using "B" class bulkhead;

.2 FP 53/4/3 (Japan), providing the information and a suggestion on the surface flammability test of the draft revised FTP Code, part 5, for introducing the updated standard ISO 5658-2, which was obtained through experimental tests in Japan;

.3 FP 53/4/4 (Republic of Korea), presenting the test results regarding the use of propane and acetylene for the surface flammability test, as it was determined that acetylene is a hazardous gas requiring extreme caution during its use; and

.4 FP 53/4/5 (IACS), commenting on the work undertaken by the correspondence group on the approval and test methods for large fire doors, and proposing revised criteria for assessment to be applied in cases where the dimensions exceed 15% width and height and 10% area of the fire tested door,

the Sub-Committee agreed that the above documents should be forwarded to the working group for detailed consideration.

**ESTABLISHMENT OF THE WORKING GROUP**

4.6 Recalling its relevant decision at FP 52 regarding a working group, the Sub-Committee established the Working Group on Comprehensive Review of the Fire Test Procedures Code and instructed it, taking into account the comments and decisions made in plenary, to finalize the draft revised FTP Code based on the text prepared by the working group established at FP 52 (FP 53/4 and FP 53/INF.4) and the correspondence group (FP 53/4/1), taking into account documents FP 53/4/2, FP 53/4/3, FP 53/4/4 and FP 53/4/5.

**REPORT OF THE WORKING GROUP**

4.7 Having received the report of the working group (FP 53/WP.3), the Sub-Committee approved it in general and took action as outlined hereunder.

## REVISION OF THE FTP CODE

### Period of grace for renewal of type approvals of products tested in accordance with the previous FTP Code

4.8 The Sub-Committee agreed that within five years after the Code enters into force, Administrations may renew the type approvals of products tested in accordance with the previous version of the Code regardless of the age of the test reports.

### Validity of a test report after the revised FTP Code enters into force

4.9 In considering the validity of a test report after the revised FTP Code enters into force, the Sub-Committee noted the following:

.1 the group agreed that at least five years would be necessary for manufacturers to apply to various Administrations to seek type approval based on a test report;

.2 the group agreed to specify the maximum duration (15 years) for which a type approval may be reissued for a product without re-testing; and

.3 several delegations expressed the view that the aforementioned maximum duration is not necessary because production quality is controlled (paragraph 5.2.2 of the draft revised FTP Code, as contained in document FP 53/INF.4).

### Reference to ISO standards

4.10 The Sub-Committee noted that the group, having considered paragraph 2 of document FP 53/4, had examined the status and contents of the ISO standards which are referred to in the draft revised FTP Code and agreed to refer to the published ISO standards.

### Part 1 – Non-combustibility test

#### *Organic contents*

4.11 The Sub-Committee noted that the group had considered extensively the requirements for a test method and the relevant paragraphs in parts 1 and 3 of the draft revised FTP Code for moisture and organic content in the samples for insulation materials for the fire division specimen, and agreed with the proposed text, introduced to parts 1 and 3 of the draft revised Code, based on EURIMA's (European Insulation Manufacturers Association) comments concerning uniform procedures for monitoring and verifying combustible content in insulation products.

### Part 2 – Smoke and toxicity test

#### *Presentation by ISO*

4.12 The Sub-Committee noted that the group had received a presentation by an observer from ISO on the result of the inter-laboratory tests which were conducted according to the draft part 2. The Sub-Committee also noted that the group, after expressing its appreciation to ISO, had recognized the usefulness of the result of the inter-laboratory tests for the purpose of its consideration on the draft revised FTP Code, and had decided to use the information as the basis of its consideration.

***Toxicity index for gas-measuring of part 2***

4.13 In considering the toxicity index, the Sub-Committee recalled that, at FP 52, Member Governments and international organizations were invited to provide relevant data on toxicity test results in order to consolidate the existing database for further analysis (FP 52/21, paragraph 4.20). The Sub-Committee, having noted that no useful data was submitted to the correspondence group, considered that the application of the toxicity index was premature but should be kept for future consideration and agreed to retain the existing toxicity criteria.

**Part 3 – Test for "A", "B" and "F" class divisions**

***Large doors***

4.14 In noting that the group considered the fundamental requirements for the testing and evaluation of large doors (larger than those specified in MSC/Circ.1273), taking into account the IACS Unified Interpretation as well as document FP 53/4/5, the Sub-Committee agreed that it was premature to include the proposed analysis method into the draft revised FTP Code as a mandatory part at this stage, but it could be used on a recommendatory basis. Therefore, the Sub-Committee agreed to the draft MSC circular on Recommendation for the evaluation of fire performance and approval of large fire doors, set out in annex 13, for submission to MSC 86 for approval.

***Lightweight constructions***

4.15 The Sub-Committee, recognizing that preparation of the draft amendment to SOLAS chapter II-2 for lightweight construction was not within the terms of reference of the working group, agreed not to take any action on the proposed amendment. However, the Sub-Committee, also recognizing the merit of the draft text of fire test procedures for lightweight construction prepared by the working group, agreed to keep the draft text, set out in annex 5 to document FP 53/WP.3, for future consideration.

***Standard ISO 834-1 – Plate thermometer***

4.16 During the discussion of document FP 53/4/2, the majority of delegations supported the use of plate thermometers for controlling the fire test furnace. However, some delegations expressed their concern that furnace control by plate thermometer would require an increased heat input to the test furnace and so would result in an increased heat input to the specimen at the beginning of the test. One delegation informed on its experience that such an increase of heat is very small within the first several minutes and there is no such increase of heat after 10 min. This view was supported by several delegations. It was also proposed to keep the sheathed thermocouple as an alternative and to leave the Administration to decide which kind of thermocouple should be used. The Sub-Committee noted the group's decision to delete this possibility and to include the only option for the plate thermometers for controlling the fire test furnace.

***Other comments***

Ambient conditions, part 3

4.17 The Sub-Committee noted that the group had considered the proposal to change the range of ambient temperature from 20 ± 10°C to 5°C to 35°C, with reference to the BS 476 standard. The Sub-Committee also noted that, during the discussion, some delegations had suggested to keep the current ambient temperature of 20 ± 10°C as presented in standard ISO 834-1, however, the group decided that the fire resistance test should start within the temperature range of 10°C and 35°C.

Conditioning of the test specimen

4.18 The Sub-Committee noted that the group, in considering the method of conditioning of the fire resistance test specimen prior to the test, while noting that the fire resistance test specimen should, ideally, be kept in a standard temperature/humidity condition ($23 \pm 2^{o}C$ and $50 \pm 5\%$ relative humidity) prior to the test, had recognized that it may not be practical, and had agreed that the fire resistance test specimen should be kept at ambient temperature at the testing laboratory until it reaches an equilibrium condition, which should be determined by small samples of the materials used in the test specimen and placed at the same place of the fire resistance test specimen.

Cable transit

4.19 The Sub-Committee noted that the group, considering how much area should be occupied by cables in the cable transits for testing, had agreed that two test specimens should be prepared: one for the maximum and the other for the minimum, as specified by the manufacturer's specification for the inside cross-sectional area to be occupied by cables. Some delegations had expressed the view that such a specification would solve any misunderstanding between testing condition and actual installation.

Cotton pad test

4.20 The Sub-Committee, recognizing the difficulty in determining the temperature of the position to which a cotton pad should apply, as required by part 3 of the draft revised FTP Code, agreed that application of cotton pads should be terminated when the duration of attained insulation class (e.g., 30 min for "A-30" class) passed, and made modifications in part 3 to follow this principle. The Sub-Committee also recognized that this alteration may lead to a larger change on the fire resistance testing and integrity criteria.

***Intumescent materials***

4.21 The Sub-Committee noted that the group, having received an opinion that intumescent materials intentionally used as an insulation material should not be removed by gap gauge during the fire test, had considered paragraph 8.4.4.3 of appendix 1 to part 3 of the draft revised FTP Code. One delegation expressed concern that such intumescent materials would not give sufficient fire protection in actual use due to unknown life under environmental conditions within ships. The Sub-Committee noted that the group could not reach any concrete conclusion, and decided not to modify the draft text.

**Part 5 – Test for surface flammability**

***Test method and test apparatus (standard ISO 5658-2 updated)***

Presentation by ISO

4.22 The Sub-Committee noted that the group had received a presentation by an observer from ISO on the result of the inter-laboratory tests which were conducted according to the draft part 5 and, recognizing the usefulness of the result of the inter-laboratory tests for the purpose of consideration on the choice of the type of pilot flame (impinging or remote flame), had decided to use the information as the basis of its consideration.

Pilot flame

4.23 The Sub-Committee noted that, in considering the revised standard ISO 5658-2 and documents FP 53/4/3 and FP 53/4/4, where pilot burner gas would be changed from acetylene to propane, the group had also considered using propane gas instead of acetylene gas for the pilot flame and, after extensive discussion, had agreed to use only an impinging pilot flame by propane gas.

***Part 8***

Individual test for cover materials and filling materials

4.24 The Sub-Committee noted that, during the discussion of this matter in the group, there were divided views on individual test for cover and filling materials. The Sub-Committee, noting also the majority's view that the type approval should be given to the final product of upholstered furniture, recognized the merit of test procedures for independent tests for cover and filling materials, and agreed to place them into a new appendix to the draft part 8.

Cigarette ignition source

4.25 The Sub-Committee noted that the observer from ISO had informed the group that there are activities within the United States and ISO to establish a standard for a fire safety cigarette which may be used in many states, and it may become difficult to obtain the cigarette as specified in draft parts 8 and 9 in those states. The observer expressed the view that introduction of such a fire safety cigarette may change the risk of fire due to cigarettes and therefore, such fire scenarios should be reviewed. The above information and view were supported by some delegations. In noting the information, the Sub-Committee agreed to keep the fire test method using cigarettes as it is in the draft parts 8 and 9, and to the need for a future review of the test methods using smouldering source as the ignition source.

**Draft revised FTP Code**

4.26 Having considered the above matters, and noting comments in plenary that the delegations that did not take part in the working group were not able to consider the complete text of the draft revised FTP Code, the Sub-Committee agreed, in principle, to the draft International Code for the Application of Fire Test Procedures, 2010 (2010 FTP Code) and the associated draft MSC resolution, as set out in annex 14, for submission to MSC 86 for approval, in principle, and subsequent adoption at MSC 87. In light of the above, the Sub-Committee agreed that FP 54 would review the draft Code, as approved, in principle, by MSC 86, for editorial changes as necessary, for submission to MSC 87, to be considered in conjunction with the adoption of the draft Code.

4.27 Consequently, the Sub-Committee requested the Secretariat to effect any necessary editorial modifications to the draft Code in order to avoid inconsistencies, specifically on the modifications agreed at FP 52 and FP 53.

**Draft amendments to SOLAS chapter II-2**

4.28 The Sub-Committee agreed to the draft amendments to SOLAS chapter II-2, as set out in annex 15, for submission to MSC 86 for approval and subsequent adoption, in conjunction with the adoption of the 2010 FTP Code (see paragraph 4.26).

**Extension of the target completion date**

4.29 In view of the above developments, the Sub-Committee invited the Committee to extend the target completion date for the item to 2010.

## 5 MEASURES TO PREVENT EXPLOSIONS ON OIL AND CHEMICAL TANKERS TRANSPORTING LOW-FLASH POINT CARGOES

### General

5.1 The Sub-Committee recalled that, at MSC 83, the Committee had included, in the Sub-Committee's work programme and the provisional agenda for FP 52, a high-priority item on "Measures to prevent explosions on oil and chemical tankers transporting low-flash point cargoes", with a target completion date of 2009, in co-operation with the BLG and DE Sub-Committees as necessary and when requested by the FP Sub-Committee.

5.2 It was also recalled that MSC 83 had agreed that, under the aforementioned work programme item, the Sub-Committee should first consider measures for new ships, taking into account the different operational demands on chemical tankers and the need that essential data is submitted and considered first and, depending on the outcome of their consideration, the Committee would then consider the extension of the item towards appropriate measures for existing oil and chemical tankers transporting low-flash point cargoes, taking into account the comments made during the discussion.

5.3 The Sub-Committee further recalled that, at MSC 83, the Committee had agreed to take into account the concerns raised in respect of dangerous atmospheres (FP 52/20, annex).

5.4 It was noted that, at FP 52, the Sub-Committee had decided to establish a working group at this session to progress the matter and had urged Member Governments and international organizations to submit essential data on the subject to FP 53 for consideration and action, as appropriate.

5.5 The Sub-Committee had the following documents for consideration under this agenda item:

.1 FP 53/5 (Secretariat), containing the outcome of FP 52 on matters related to this item;

.2 FP 53/5/1 (Secretariat), containing the relevant parts of the reports of investigation into the **Chassiron**, **Panam Serena** and **Bow Mariner**;

.3 FP 53/5/2 (Secretariat), containing a compilation of the analyses of tank-related fire and explosion casualties on oil and chemical tankers considered by the FSI Sub-Committee since FSI 8, in order to provide essential data on this subject to assist the Sub-Committee with its work on this task;

.4 FP 53/5/3 (Norway), containing a formal safety assessment on the installation of inert gas systems on tankers of less than 20,000 tonnes deadweight, in order to provide the Sub-Committee with further information and analysis on this issue, recommending also that smaller ships should have an inert gas system fitted, in order not to lead to a lower safety standard for some types or sizes of ships. It should be noted that the port turnaround had not been taken into account when the study was performed;

.5 FP 53/5/4 (Japan), recommending that oil tankers, including product carriers, should follow the latest edition of the International Safety Guide for Oil Tankers and Terminals (ISGOTT) and proposing a draft recommendation for safe operation on tankers;

.6 FP 53/5/5 (IPTA and ICS), discussing different operation issues related to the introduction of mandatory requirements for the installation of inert gas systems (IGS) on chemical tankers;

.7 FP 53/5/6 (IPTA and ICS), providing two examples of actual voyages undertaken by parcel/chemical tankers during 2008, which could be considered as typical of the type of operations constantly being carried out in the chemical/parcel tanker trade;

.8 FP 53/5/7 (IPTA and ICS), commenting on document FP 53/5/3 (Norway) on the many issues raised to propose mandatory requirements for inert gas systems; and

.9 FP 53/INF.3 (Japan), providing the result of analysis of fire and explosion casualties in cargo areas on oil and chemical tankers, and concluding from the analysis that safety measures against fire and explosion in cargo areas on tankers should be considered comprehensively.

**Standards for the design of in-tank pumps**

5.6 The Sub-Committee noted the information provided by IACS regarding the development of international safety standards for the design and operation of in-tank pumps and, in particular, that the above standards are currently under development and would be ready for circulation in March 2009. The observer from IACS also informed the Committee that a relevant document on the matter would be submitted to FP 54.

**Discussion of submissions**

5.7 In the course of considering the documents referred to in paragraph 5.5 above, the Sub-Committee noted the following views expressed during the discussion:

.1 the results of the Inter-Industry Working Group report on fires and explosions on chemical and product tankers (MSC 81/8/1) should be included in the list of documents to considered on the matter;

.2 industry guidance such as the International Safety Guide for Oil Tankers and Terminals (ISGOTT) and the Tanker Safety Guide (Chemicals), by ICS, should be considered as part of any measures to be developed, taking into account that the failure to follow procedures was the main cause for the fires and explosions identified by the Inter-Industry Working Group;

.3 enhanced training regarding cargo tank operating procedures should be included in the ongoing revision of the STCW Convention, in particular, concerning tanker endorsements;

.4 inert gas systems should be installed on new oil and chemical tankers to reduce the risk of fire and explosions;

.5 most chemical cargoes entail a relatively high level of tank preparation, which will usually involve the crew entering the tank to complete cleaning operations and for cargo inspectors to then enter in order to establish the cleanliness and suitability of the cargo tanks for the intended cargo, and the installation of inert gas systems on chemical tankers could increase the risk of asphyxiation;

.6 that consultations with the International Federation of Inspection Agencies (IFIA) had determined that no process or technique existed that could significantly decrease the need for, and therefore the risk of, invasive cargo tank inspection procedures on chemical tankers prior to the loading of low-flash point cargoes;

.7 the possibility of increased port time in areas where congestion is already a major factor needs to be taken into account when considering the application of inert gas to chemical carriers;

.8 the potential for over pressurization of cargo tanks is possible if shore-supplied inerting is made mandatory;

.9 the effectiveness of having inert gas on small ships engaged in short voyages was doubted;

.10 it was noted that the FSA studies on effectiveness of installation of inert gas systems came to a different conclusion due to different factors being taken into account; and

.11 the observers from OCIMF and INTERTANKO supported the proposal of Norway, Sweden and others for a "cargo property based approach" for consistent application of inert gas requirements to tankers, specifically the requirement for inert gas for cargoes with flash points below 60°C.

5.8 In summarizing, the Chairman emphasized that the Sub-Committee needs to develop a positive response to the problem by addressing the issues highlighted in the documents submitted and the various interventions made on the subject. In this regard, he proposed that the working group should consider operational measures to deal with human element, technical measures for preventing fires and explosions, including the possibility of requiring inert gas systems on new oil and chemical tankers.

**Establishment of the working group**

5.9 Recalling its relevant decision at FP 52 regarding a working group, the Sub-Committee established the Working Group on Measures to Prevent Explosions on Oil and Chemical Tankers Transporting Low-Flash Point Cargoes and instructed it, taking into account the comments and decisions made in plenary, to:

.1 consider operational and technical measures to prevent fires and explosions on new oil and chemical tankers transporting low-flash point cargoes, taking into account the different operational demands on chemical tankers, the concerns raised in respect of dangerous atmospheres, and documents FP 53/5, FP 53/5/1, FP 53/5/2, FP 53/5/3, FP 53/5/4, FP 53/5/5, FP 53/5/6, FP 53/5/7, FP 53/INF.3, FP 52/20/1, FP 52/INF.2, FP 51/10/1, MSC 81/8/1 and MSC 81/INF.8, and prepare recommendations for new ships only, which should be composed of:

.1.1 operational measures to deal with human element considerations,

.1.2 technical measures which should have added value for preventing fires and explosions, in particular, considering loading and unloading operations and tank cleaning and inspections, and

.1.3 exploring the possibility of requiring inert gas (IG) or equivalent systems, taking into account the different ship types and sizes.

**Report of the working group**

5.10 Having received the report of the working group (FP 53/WP.2), the Sub-Committee approved it in general and took action as outlined hereunder.

5.11 The Sub-Committee noted that views in the group were divided as to whether the discussions on the measures to prevent fires and explosions should be separated from the issue of tank entry and cargo operating procedures, i.e. measures to ensure a tank is safe before entry, but that, however, the majority of the group had agreed that the two issues should not be treated separately since the problems associated with tank entry were fundamental to the discussions.

5.12 The Sub-Committee also noted that concerns were raised regarding an increase in turnaround time in ports should inerting of tanks be required for all new oil and chemical tankers and also that such requirement would add another layer to an already very complex process for chemical tankers, and that it was also pointed out that inerting may increase the risk associated with tank entries and that technology to avoid entering tanks was not yet fully developed.

5.13 The Sub-Committee agreed that the results of the Inter-Industry Working Group formed to investigate fires and explosions on chemical and product tankers (MSC 81/8/1) should be further thoroughly considered in the work on the agenda item, together with any other relevant document.

5.14 The Sub-Committee noted that any tank entry was always hazardous, whether tanks had been inerted or not, and that an empty tank did not equal a safe tank. The importance of following established procedures for entering enclosed spaces was stressed.

5.15 The Sub-Committee also noted that the delivery of nitrogen to chemical tankers from shore facilities was considered by the group, whereby potential problems with a guaranteed supply and the quality of nitrogen and possible problems with over pressurization of ships' tanks from shore nitrogen supply were mentioned.

***Operational measures to deal with human element considerations***

5.16 The Sub-Committee noted that the group had discussed the cargo-specific element of the training for chemical tanker endorsements and had agreed that more training on the specifics of hazardous chemicals, including low-flash point cargoes, was necessary, and agreed to invite the STW Sub-Committee to reconsider document STW/ISWG 1/5/12 in the context of the revision of the STCW Convention, in particular the draft amendments to chapter V proposed in the document so that enhanced training regarding tank entry and cargo operating procedures could be included in the revision. In this connection, the Sub-Committee noted that relevant training and experience of surveyors and other shore personnel may also need to be considered.

5.17 The Sub-Committee noted that guidance from the industry regarding the entry into enclosed spaces was readily available, such as the information contained in the International Safety Guide for Oil Tankers and Terminals (ISGOTT) by ICS/OCIMF/IAPH, the Tanker Safety Guide (Chemicals) by ICS and the Guidelines on safety management systems for hot work and entry into enclosed spaces by OCIMF, but was not always complied with, and agreed that such industry guidance should be taken into account in the further work. In this context, the Sub-Committee noted that the Recommendation for safe operation of tankers, developed by Japan (FP 53/5/4), could also assist in preventing fire and explosions on tankers. In this connection, the Sub-Committee noted information on asphyxiation incidents issued by various industry bodies.

5.18 The Sub-Committee also noted that, in the tank-related fire and explosions investigated by the Inter-Industry Working Group (MSC 81/8/1), failure to follow established procedures was observed in a significant number of incidents, and that some delegations had pointed out that the objective should be to reduce the number of tank entries, but that, at the same time, it would appear that commercial pressure was leading to an increase in tank inspections, thereby raising the number of entries.

***Technical measures to prevent fires and explosions***

5.19 The Sub-Committee agreed that the fitting of appropriate inert gas systems (IGS) to new oil tankers of less than 20,000 tonnes deadweight and new chemical tankers carrying low-flash point cargoes would minimize the risk of fires and explosions. It was, however, pointed out that the benefits of such fitting should outweigh any negative effects of the introduction of IGS, such as increased fuel consumption, increased $CO_2$ emissions, increased building costs, increased complexity of procedures, and possible increase of the risk associated with tank entries.

5.20 The Sub-Committee noted that the majority of the group had agreed that a lower size limit should be set for new oil tankers to which the IGS requirement would apply, and had also felt that it may be appropriate to apply the same size limit to chemical tankers, but that, however, other delegations had been of the view that any new requirements should not be subject to a size limit. The Sub-Committee also noted that views in the group had been divided at which deadweight value the cut-off should be set, taking into account the two FSA studies by Japan and Norway, and that some delegations had been proposing a lower limit of 4,000, 6,000 or 8,000 tonnes deadweight. Noting that the group had not reached agreement in the matter, the Sub-Committee agreed that the lower size limit for new tankers, to which the requirement of fitting IGS would apply, needed to be further considered.

5.21 The observer from OCIMF, supported by the delegations of Norway and Sweden and the observer from INTERTANKO, stated that requirements should be in line with the principle of the SOLAS Convention and that there should be no other lower limit to the size of new tankers to which the requirements for inert gas systems apply other than that established in SOLAS, i.e. 500 gross tonnage, indicating that, for example, the requirement for inert gas system in the IGC Code applies to all gas carriers above 500 gross tonnage. They further stated that they knew that the fitting of IGS to new tankers of less than 20,000 tonnes deadweight would minimize the risk of fires and explosions; that it was technically feasible to install inert gas systems on all newbuild tankers, regardless of size, and that no one had disagreed with this point; and that there had been over 30 years of experience with inert gas in the tanker industry.

5.22 The Sub-Committee noted the views that the size limit should be settled after MEPC 59 has agreed on the "oil spill cost per unit volume" threshold (CATS value) which would enable a proper analysis of the cost-benefit ratio of the introduction of inert gas to tankers as described above.

New oil tankers

5.23 The Sub-Committee agreed that new oil tankers of less than 20,000 tonnes deadweight should be fitted with inert gas systems, and that the need for application of a lower limit should be further considered based on the current proposals of [8,000] [6,000] [4,000] tonnes deadweight, recognizing that such requirements could be introduced by suitably modifying the provisions of SOLAS regulation II-2/4.5.5.

5.24 The delegation of the Bahamas pointed out the limitations of FSA studies, in particular, the use of broad assumptions in relation to the costs involved. Therefore, the outcomes, in terms of minimum tonnages meeting the cost-benefit criteria, should not be taken as absolute figures. The FSA results are only guidance for the benefit of the decision makers, i.e. the FP Sub-Committee. In this context, the delegation of Norway subsequently stated that they would not oppose the lower tonnage limit being 500 gross tonnage.

New chemical tankers

5.25 The Sub-Committee agreed that requirements should be developed for the installation of inert gas systems on new chemical tankers, and that, since chemical tankers presented much more complex problems than oil tankers, separate requirements may need to be developed to cover them, which would necessarily also include modifications to SOLAS regulation II-2/4.5.5.2.

5.26 The delegation of the Bahamas, supported by the delegation of Norway and the observers from ITF, IAPH, OCIMF and INTERTANKO, stated their opinion that, taking into account the risks involved in the carriage of low-flash point cargoes, the same carriage requirements should apply to new oil tankers and new chemical tankers.

**Extension of the work programme item**

5.27 The Sub-Committee agreed that further intensive debate on the issue for two more sessions of the Sub-Committee was necessary and, consequently, invited the Committee to extend the target completion date of the work programme item to 2011.

5.28 The Sub-Committee invited Member Governments and international organizations to submit proposals for concrete amendments to relevant IMO instruments and any other information regarding the matter to FP 54 and agreed that a working group should be established at that session to consider such proposals and any other information submitted.

## 6 FIRE RESISTANCE OF VENTILATION DUCTS

6.1 The Sub-Committee recalled that, at MSC 83, the Committee, having considered document MSC 83/25/11 (Denmark), had agreed to expand the Sub-Committee's existing work programme item on "Fire resistance of ventilation ducts" to cover all SOLAS regulations for ventilation systems and agreed to extend the target completion date to 2009.

6.2 The Sub-Committee also recalled that, at FP 52, it had agreed to the draft amendments to SOLAS regulation II-2/9.7 on matters related to fire resistance of ventilation ducts, which were approved by MSC 84 and subsequently adopted by MSC 85, by resolution MSC.269(85). In this context, the aforementioned amendments apply to new ships only.

6.3 Following consideration of documents:

.1 FP 53/6 (United States), containing proposed amendments to SOLAS regulation II-2/9.7, in order to clarify and harmonize the SOLAS ventilation system requirements. The proposed amendments would require automatic fire dampers for all ventilation duct penetrations of "A" class divisions; and

.2 FP 53/INF.5 (Republic of Korea), containing the results of tests which were carried out in order to observe the behaviour of the ventilation duct and carbon dioxide gas when the carbon dioxide fire-extinguishing system is activated,

the Sub-Committee agreed with the proposed amendments to SOLAS regulation II-2/9.7, in general, noting the view of several delegations that more detailed consideration was necessary. In this context, the Sub-Committee noted views expressed by several delegations that the fitting of automatic fire dampers in all "A" class divisions would be very costly for passenger ships and technically not proven to substantially improve safety.

6.4 In light of the above and noting that the amendments to SOLAS regulation II-2/9.7, adopted by resolution MSC.269(85) are not expected to enter into force until 1 July 2010, the Sub-Committee invited Member Governments and international organizations to submit proposals to FP 54 and further invited MSC 86 to extend the target completion date of this item to 2010.

## 7 GUIDELINES FOR DRAINAGE SYSTEMS IN CLOSED VEHICLE AND RO-RO SPACES AND SPECIAL CATEGORY SPACES

### General

7.1 The Sub-Committee recalled that, at MSC 83, the Committee had considered documents MSC 83/25/2 (Egypt) and MSC 83/3/2 (Denmark, Norway and Sweden), proposing to improve the drainage of fire-fighting water from the vehicle decks of ro-ro ships, and had acknowledged the need to take urgent action on the matter in light of the tragic loss of life caused by the sinking of the passenger ferry **Al-Salam Boccaccio 98**.

7.2 It was also recalled that MSC 83 had approved draft amendments to SOLAS regulations II-1/35-1 and II-2/20 to address the drainage of special category and ro-ro spaces to prevent accumulation of water on the vehicle deck of ro-ro ships, for adoption at MSC 84. Subsequently, the amendments to SOLAS regulation II-2/20 were adopted by resolution MSC.256(84), and are expected to enter into force on 1 January 2010.

7.3 The Sub-Committee noted that MSC 83, having approved draft amendments to SOLAS chapters II-1 and II-2, had agreed that the appropriate Guidelines should be developed to assist Administrations in the implementation of the new amendments and decided to include, in the work programmes of the FP and SLF Sub-Committees and the provisional agenda for SLF 51, a high-priority item on "Guidelines for drainage systems in closed vehicle and ro-ro spaces and special category spaces", with a target completion date of 2009.

7.4 The Sub-Committee also noted that FP 52, as instructed by MSC 83, had given the matter preliminarily consideration and had decided to instruct the Correspondence Group on Performance Testing and Approval Standards for Fire Safety Systems to further develop the draft Guidelines with a view to finalization at FP 53 (FP 52/21, paragraph 18.11).

### Outcome of MSC 84

7.5 The Sub-Committee recalled that, at MSC 84, the Committee, in noting that the new SOLAS regulation II-1/35-1, adopted by resolution MSC.194(80), was expected to enter into force on 1 January 2009, had recognized that, procedurally, the proposed amendments to regulation II-1/35-1 could not be adopted at that session. Subsequently, MSC 84 agreed to adopt the proposed amendments to regulation II-1/35-1 at a future session after the entry into force of regulation II-1/35-1.

### Outcome of SLF 51

7.6 The Sub-Committee noted that SLF 51 had considered the specifications for the drainage capacity and the "scupper grating" construction, as proposed in document MSC 83/3/2 (Denmark, Norway and Sweden), and had agreed that:

.1 the drainage from enclosed ro-ro spaces or special category spaces should be of such capacity that two-thirds of the scuppers, freeing ports, etc., on the starboard or port side are capable of draining off a quantity of water originating from both sprinkler pumps and fire pumps, taking into account a list of 1° for ships with a breadth of 20 m or more and 2° for ships with a breadth below 20 m and a trim forward or aft of 0.5°; and

.2 scuppers on ro-ro decks should be provided, over the outlet grate, with a removable grille with vertical bars, to prevent large obstacles from blocking the drain. The grille may be placed obliquely against the side of the ship. The grille should have a height of at least 1 m above the deck and should have a free flow area of at least 0.4 $m^2$, while the distance between the individual bars should be not more than 25 mm.

7.7 The Sub-Committee also noted that SLF 51, having recognized that there is no meeting in 2009 and that the amendments to SOLAS regulation II-2/20 are expected to enter into force on 1 January 2010, had invited Member Governments and international organizations to contribute to the correspondence group established at FP 52 on this issue and requested the Secretariat to inform FP 53 of the above outcome.

**Report of the correspondence group**

7.8 The Sub-Committee considered the part of the report of the Correspondence Group on Performance Testing and Approval Standards for Fire Safety Systems relating to this item (FP 53/7) and, having approved that part in general, instructed the Working Group on Performance Testing and Approval Standards for Fire Safety Systems, established under agenda item 3 (Performance Testing and Approval Standards for Fire Safety Systems), to finalize the draft Guidelines (FP 53/7, annex), taking into account comments made in plenary.

**Report of the working group**

7.9 Having considered the part of the report of the working group (FP 53/WP.1) relating to this item, the Sub-Committee took action as outlined hereunder.

**Guidelines for the drainage of fire-fighting water from the closed vehicle decks of ro-ro ships**

7.10 The Sub-Committee noted that the group had finalized the draft Guidelines for the drainage of fire-fighting water from closed vehicle and ro-ro spaces and special category spaces of passenger and cargo ships, based on the annex to document FP 53/7, in particular that, with regard to the use of direct overboard drains above the bulkhead deck, the group had considered that the 5º heel requirement for immersion of the bulkhead deck may not be a suitable value to use for conditions of severe listing but determined that this same consideration may affect a variety of casualty scenarios on ro-ro ships. In this regard, the Sub-Committee, having decided that the use of direct overboard drains above the bulkhead deck in accordance with SOLAS regulation II-1/35-1 should be accepted, invited the SLF Sub-Committee to re-examine the provisions of paragraphs 2.6.1 and 2.6.2 of the regulation from a holistic viewpoint to determine the validity of the 5º heel breakpoint on modern ro-ro ships.

7.11 Subsequently, the Sub-Committee agreed to the draft Guidelines for the drainage of fire-fighting water from closed vehicle and ro-ro spaces and special category spaces of passenger and cargo ships and the associated draft MSC circular, as set out in annex 16, for submission to MSC 86 for approval.

## 8 CLARIFICATION OF SOLAS CHAPTER II-2 REQUIREMENTS REGARDING INTERRELATION BETWEEN CENTRAL CONTROL STATION AND SAFETY CENTRE

### General

8.1 The Sub-Committee recalled that, at FP 52, it had agreed to refer the matter of the clarification of SOLAS chapter II-2 requirements regarding interrelation between central control station and safety centre to the Working Group on Review of Fire Safety of External Areas on Passenger Ships for further consideration, taking into account document FP 52/14 (Argentina) and decisions made in plenary.

8.2 It was also recalled that, at FP 52, the Sub-Committee had established the Correspondence Group on Clarification of SOLAS chapter II-2 Requirements Regarding Interrelation between Central Control Station and Safety Centre, with the terms of reference set out in paragraph 14.5 of document FP 52/21, and instructed it to submit a report to FP 53.

### Report of the correspondence group

8.3 The Sub-Committee considered the report of the correspondence group (FP 53/8) and, having approved it in general:

.1 concurred that the functionality of the safety centre systems in accordance with SOLAS regulation II-2/23.4 should remain, under all circumstances, in order to efficiently manage any envisaged emergency situation from the safety centre without distracting the navigation bridge team;

.2 noted the draft onboard functional safety centre requirements;

.3 noted the group's discussion concerning the concept and meaning of the term "continuously manned" and the functional requirements for manning a safety centre;

.4 noted the proposed interpretations of "continuously manned safety centre";

.5 noted the diagrams provided to indicate which arrangements of the safety centre may or may not be considered to be part of the bridge;

.6 concurred with the group's views that regulations other than those referred to in the terms of reference should be reviewed for inclusion of various functions within the safety centre either as a requirement or as a recommended practice, and agreed to consider this matter at FP 54;

.7 noted the discussion regarding the use of Information Technology Systems (computers) in providing the required system functionality in the safety centre and in other locations and concurred that such systems would be useful; and

.8 noted that the correspondence group had considered that the work on this item was not complete and that the annexes to the report of the group were in draft form only.

**Establishment of the drafting group**

8.4 Having considered the above issues and recalling its relevant decision at FP 52 regarding a drafting group, the Sub-Committee established the Drafting Group on Clarification of SOLAS chapter II-2 regarding the Interrelation between Central Control Station and Safety Centre and, taking into account the comments and decisions made in plenary, instructed it to:

.1 prepare draft clarifications of SOLAS chapter II-2 requirements regarding interrelation between central control stations and safety centres based on document FP 53/8; and

.2 prepare the terms of reference for the correspondence group for consideration by the Sub-Committee.

8.5 The Sub-Committee recalled that the group was also instructed, under agenda item 18 (Explanatory notes for the application of the safe return to port requirements), to prepare the draft Explanatory notes based on document FP 53/18/1 for consideration by the correspondence group to be established on the matter (see paragraph 18.4).

**Report of the drafting group**

8.6 Having received the report of the drafting group (FP 53/WP.7), the Sub-Committee approved it in general and took action as outlined hereunder.

8.7 The Sub-Committee noted that the group, on the basis of document FP 53/8, had made further progress on the preparation of draft clarifications of SOLAS chapter II-2 requirements regarding interrelation between central control stations and safety centres, which are set out in annex 1 to document FP 53/WP.7.

8.8 The Sub-Committee, having noted the opinion of the group that the correspondence group to be established should be informed of the outcome of the work currently carried out by the NAV Sub-Committee under its work item on "Development of guidelines for IBS, including performance systems for bridge alert management", agreed to request the Secretariat to keep the Sub-Committee informed accordingly.

8.9 Having considered the above issues and recognizing the necessity to make progress on this item, the Sub-Committee decided to instruct the correspondence group established under agenda item 18 to further consider annex 1 to document FP 53/WP.7, together with the comments contained in document FP 53/8, and prepare the final draft clarification for the consideration of FP 54, taking into account:

.1 the interrelation between central control stations and safety centres, in particular when the latter are manned;

.2 the hierarchy of control between continuously manned central control stations and safety centres; and

.3 the individual systems listed under SOLAS regulation II-2/23.6 so as to identify to what extent the requirements in respect to alarm, control, monitoring and power supply are related to the navigation bridge, continuously manned control stations and safety centres,

with a view to finalization at FP 54.

## 9 RECOMMENDATION ON EVACUATION ANALYSIS FOR NEW AND EXISTING PASSENGER SHIPS

### General

9.1 The Sub-Committee noted that MSC 83 had approved the Guidelines for evacuation analysis for new and existing passenger ships, which were disseminated by means of MSC.1/Circ.1238 and, having considered document MSC 83/8/2 (Germany), proposing that the item related to the aforementioned Guidelines be retained in the Sub-Committee's work programme so that unresolved issues could still be further considered by the Sub-Committee, had agreed to retain the item on the Sub-Committee's work programme and had included it in the provisional agenda for FP 52.

9.2 It was recalled that, at FP 52, the Sub-Committee had noted the proposal by Germany (FP 52/19/1) to develop a mandatory requirement to perform an evacuation analysis at an early stage of design for passenger ships other than ro-ro passenger ships, and the assumptions that the evacuation analysis should assume that passengers proceed according to the evacuation procedures for the ship, and agreed that more time was necessary to collect relevant data on the issue before evacuation analysis guidelines be considered for mandatory application.

9.3 The Sub-Committee noted that FP 52, having decided not to establish a correspondence group on this item, had agreed to invite the Committee to extend the target completion date of the item to 2010 and invited Member Governments and international organizations to submit relevant comments and proposals to FP 53.

9.4 Following consideration of documents:

.1 FP 53/9 (Germany and Sweden), further considering unresolved issues pertaining to this agenda item, proposing one additional scenario for evacuation analysis at an early stage of design and suggesting to pursue the mandatory status of the evacuation analysis at an early stage of design also for passenger ships other than ro-ro passenger ships; and

.2 FP 53/9/1 (United States), recommending that the Sub-Committee further consider the establishment of uniform life safety criteria for evacuation routes, to be used in fire modelling carried out in conjunction with the Guidelines for evacuation analysis for new and existing passenger ships (MSC.1/Circ.1238) and the Guidelines on alternative design and arrangements for fire safety (MSC/Circ.1002). Additionally, it was considered that the assumption that evacuation routes remain fully available should be re-evaluated, taking into account the new scenarios created by the passenger ship safety initiatives for evacuation to safe areas and safe return to port,

the Sub-Committee agreed that a correspondence group should be established to develop alternative scenarios and to discuss the mandatory nature of the Guidelines for evacuation analysis for new and existing passenger ships (MSC.1/Circ.1238), taking into account that the Guidelines are a design tool. The Sub-Committee also agreed that the proposal by the United States (FP 53/9/1) should be further considered by the aforementioned group.

**Establishment of the correspondence group**

9.5 Subsequently, the Sub-Committee established the Correspondence Group on Evacuation Analysis for New and Existing Passenger Ships, under the co-ordination of Germany*, to progress the work on this issue and instructed the group, taking into account the relevant information contained in documents FP 53/9 and FP 53/9/1, to:

.1 discuss a mandatory requirement for applying MSC/Circ.1238 to all passenger ships and, if appropriate, prepare draft amendments to the Guidelines;

.2 further consider existing scenarios, and also consider alternative scenarios, for evacuation analysis at an early stage of design, based on the proposals contained in documents FP 53/9 and FP 53/9/1;

.3 further consider the establishment of uniform life safety criteria for evacuation routes, to be used in fire modelling carried out in conjunction with the Guidelines for evacuation analysis for new and existing passenger ships (MSC.1/Circ.1238) and the Guidelines on alternative design and arrangements for fire safety (MSC/Circ.1002); and

.4 submit a report to FP 54.

## 10 MEASURES TO PREVENT FIRES IN ENGINE-ROOMS AND CARGO PUMP-ROOMS

**General**

10.1 The Sub-Committee recalled that, at FP 52, the Sub-Committee had agreed that the draft Guidelines for measures to prevent fires in engine-rooms and cargo pump-rooms should only apply to new ships and that parts V (Pump-rooms and other spaces adjacent to cargo tanks), VI (Ergonomic arrangement) and VII (Human element) of the draft Guidelines should be deleted.

10.2 The Sub-Committee also recalled that FP 52, recognizing the necessity to make progress on this item and its relevant decision at FP 51, had established the Drafting Group on Measures to Prevent Fire in Engine-Rooms and Cargo Pump-Rooms (FP 51/19, paragraphs 8.9 and 8.10).

10.3 It was further recalled that, at FP 52, the Sub-Committee, having noted the progress made on the draft Guidelines, decided not to re-establish the correspondence group on the item and invited Member Governments and international organizations to submit comments and proposals to FP 53, taking into account the latest draft text contained in the annex to document FP 52/WP.6.

---

* **Coordinator:**
Mr. Tim Meyer-König
Head of Development
TraffGo HT GmbH
Office Flensburg
Waitzstrasse 31b
D-24937 Flensburg
Germany
Tel: +49 461 1684651
Fax: +49 203 87833609
E-mail: tmk@traffgo-ht.com

10.4 The Sub-Committee had for its consideration under this agenda item the following documents:

.1 FP 53/10 (IACS), proposing amendments to the draft Guidelines (FP 52/WP.6, annex) in order to improve the text;

.2 FP 53/10/1 (Republic of Korea, United Kingdom and IMarEST), proposing a comprehensive revised text of the draft Guidelines (FP 52/WP.6, annex);

.3 FP 53/10/2 (Republic of Korea), proposing that approval standards for anti-splash tape, which is generally used to protect the spray and splash from pressurized flammable oil piping systems, should be established in order to improve fire safety in the ship's engine-rooms; and

.4 FP 53/INF.6 (Republic of Korea), presenting detailed test results of the anti-splash tape.

**Guidelines for measures to prevent fires in engine-rooms and cargo pump-rooms**

10.5 The Sub-Committee considered the draft Guidelines for measures to prevent fires in engine-rooms and cargo pump-rooms, contained in the annex to document FP 53/10/1, together with document FP 53/10 and, having decided to incorporate the modifications proposed by IACS, agreed to the draft Guidelines for measures to prevent fires in engine-rooms and cargo pump-rooms and the associated draft MSC circular, as set out in annex 17, for submission to MSC 86 for approval.

**Approval standards for anti-splash tape**

10.6 In considering matters related to the approval standards for anti-splash tape, the Sub-Committee noted the information provided in documents FP 53/10/2 and FP 53/INF.6 (Republic of Korea) and, having agreed that the matters were outside the scope of this work programme item, invited the interested Member Governments and international organizations (co-sponsored by a Government) to submit a proposal for a new work programme item to the Committee in accordance with the Guidelines on the organization and method of work.

**Completion of the item**

10.7 The Sub-Committee considered that the work on the item had been completed and invited the Committee to delete this item from its work programme.

## 11 DEVELOPMENT OF PROVISIONS FOR GAS-FUELLED SHIPS

**General**

11.1 The Sub-Committee recalled that FP 52 had established the Correspondence Group on Development of Provisions for Gas-Fuelled Ships, with the terms of reference set out in paragraph 11.4 of document FP 52/21, and instructed the group to submit a report to this session of the Sub-Committee.

11.2 It was noted that, at FP 52, the Sub-Committee had agreed to establish a drafting group at this session, with a view to finalizing the draft Interim Guidelines on safety for gas-fuelled engine installations in ships.

**Report of the correspondence group**

11.3 The Sub-Committee, having considered the report of the Correspondence Group on Development of Provisions for Gas-Fuelled Ships (FP 53/11), agreed to chapters II (section 2.10) and III of the draft Interim Guidelines relating to fire protection, with minor modifications, for referral to the BLG Sub-Committee for coordination purposes.

11.4 Subsequently, the Sub-Committee requested the Secretariat to inform BLG 13 of the above outcome and agreed to invite the Committee to delete this item from its work programme.

## 12 CONSIDERATION OF IACS UNIFIED INTERPRETATIONS

**General**

12.1 The Sub-Committee recalled that FP 52, in considering document FP 52/12/1 (Secretariat) on the outcome of SLF 50 with regard to the revised IACS Unified Interpretation SC 178 on Emergency fire pumps in cargo ships, had noted that the SLF Sub-Committee had considered the revised IACS UI SC 178 for matters under their purview, and had agreed that the combination of heave and pitch, as well as heave and roll, contained in the unified interpretation were acceptable. Notwithstanding the above, FP 52 noted the views of several delegations that the unified interpretation contained construction issues that should be further addressed in detail and agreed that further consideration was needed to resolve this matter. The Sub-Committee, therefore, invited Member Governments and international organizations to submit comments and proposals on this matter to FP 53.

12.2 The Sub-Committee also recalled that, at FP 52, in considering document FP 52/12/6 (China), providing comments and proposals on document FP 51/9/8 (IACS), which discussed the application of SOLAS regulations II-2/9.2.2.4.2.2 and II-2/9.6.3 relative to closed and open ro-ro spaces on passenger ships carrying not more than 36 passengers and, having noted the views by some delegations that the proposals constituted draft amendments to SOLAS regulation II-2/9.6 which are outside the scope of this work, invited Member Governments and international organizations to submit proposals to the Committee in accordance with the Guidelines on the organization and method of work.

12.3 It was further recalled that, at FP 52, the Sub-Committee, in considering the report of the Correspondence Group on Measures to Prevent Fires in Engine-Rooms and Cargo Pump-Rooms (FP 52/6) on:

.1 clarification of SOLAS regulation II-2/4.2.2.3.2, on matters related to forward tank position, proposed by IACS (FP 51/8/3); and

.2 interpretation of SOLAS regulation II-2/4.5.1.1, with regard to pump-rooms intended solely for ballast transfer or fuel oil transfer (FP 51/9/10),

had agreed that further consideration was needed to resolve the above issues. The Sub-Committee, therefore, had invited Member Governments and international organizations to submit comments and proposals on the aforementioned matters to FP 53.

12.4 The Sub-Committee noted that document FP 53/12/4 (IACS) was forwarded to the working group established under agenda item 3 (Performance testing and approval standards for fire safety systems) for consideration (see also paragraph 3.28).

**Fire detection and fire alarm systems in control stations**

12.5 In considering document FP 53/12 (IACS), seeking clarification on the application of SOLAS regulation II-2/7.5.5 on control stations, as it is considered unclear which, if any, of the three protection methods (IC, IIC, IIIC) should be used in a control station, as control stations are not specified in any of the aforementioned methods, the Sub-Committee agreed that the three protection methods required fixed fire detectors and fire alarm systems should be installed in control stations. The fire-extinguishing system should be compatible with the equipment and protection method used in the accommodation spaces. In this context, the observer from IACS informed the Sub-Committee that it intends to submit an IACS UI on this matter to FP 54.

**Ventilation system, electrical equipment and wiring and fire extinction for ro-ro spaces**

12.6 The Sub-Committee considered a proposal by IACS (FP 53/12/1) for an interpretation of SOLAS regulation II-2/3.41, on the definition of ro-ro spaces, and interpretation on the application of regulation II-2/20, which in their view is not applicable to cargo spaces of a multi-purpose dry cargo ship, which is equipped for carriage of ro-ro cargo and the transport of trailers and vehicles without any fuel in their tanks and are towed on board by a suitable means during loading/unloading processes in the port, and did not agree with the interpretation since, in the view of the Sub-Committee, SOLAS regulation II-2/3.41 is appropriate to all possible cases.

**Precaution against ignition of flammable vapours in closed vehicle spaces, closed ro-ro spaces and special category spaces**

12.7 In considering document FP 53/12/2 (IACS), containing updates to two IACS unified interpretations (UI SC 42 and UI SC 43) related to the implementation of SOLAS regulation II-2/20.3, the Sub-Committee agreed with them, in principle. However, having recognized that the IEC standard was addressed elsewhere in MSC/Circ.1120, the Sub-Committee invited IACS to undertake a complete review of MSC/Circ.1120 in the context of this IEC standard and submit a document on this matter to FP 54.

**Emergency fire pumps on cargo ships**

12.8 The Sub-Committee considered document FP 53/12/3 (IACS), proposing modification to IACS Unified Interpretation SC 178 (FP 51/9/9, annex), taking into account the comments at FP 52 that the unified interpretation contained construction issues that should be further addressed in detail, and agreed that an appropriate unified interpretation should be developed.

12.9 Having considered a proposal by the Secretariat (FP 53/WP.8), and noting that several delegations were of the opinion that the text was technically appropriate, while the majority of the delegations expressed some concerns regarding the transitory exemptions in the ship water ballast exchange and its berthing condition, the Sub-Committee could not agree to the draft Unified interpretations of the FSS Code. However, noting that there was support for the proposal, the Sub-Committee decided to further consider document FP 53/WP.8, and invited Member Governments and international organizations, especially those Members that were not in favour of the proposal, to submit comments and proposals on this matter to FP 54, including information on national legislation on the implementation of chapter 12 of the FSS Code. In light of the above, the observer from IACS informed the Sub-Committee that they would not submit any further documents on this matter.

**Clarification of SOLAS regulation II-2/4.2.2.3.2**

12.10 In considering the clarification of SOLAS regulation II-2/4.2.2.3.2 on matters related to forward tank position, as proposed by IACS (FP 51/8/3), the Sub-Committee recalled that the Correspondence Group on Measures to Prevent Fires in Engine-Rooms and Cargo Pump-Rooms (FP 52/6) had prepared a provision on the matter within the draft Guidelines on measures to prevent fires in engine-rooms and cargo pump-rooms and that FP 52 had decided to delete the aforementioned provision so that it could be considered as a separate matter. Consequently, the Sub-Committee agreed to the draft Unified interpretations of SOLAS chapter II-2 and the associated draft MSC circular, set out in annex 18, for submission to MSC 86 for approval.

**Pump-rooms intended solely for ballast transfer**

12.11 In considering an interpretation of SOLAS regulation II-2/4.5.1.1 (FP 51/9/10), with regard to pump-rooms intended solely for ballast transfer or fuel oil transfer, the Sub-Committee agreed that SOLAS regulation II-2/4.5.1.1 stipulated the placing of a space between the cargo tanks and the machinery spaces to prevent, in case of failure in the bulkhead, the ignition of gases originating from the liquid in those tanks ("one out of two principle"). Furthermore, SOLAS regulation II-2/4.5.10 provides safety measures to prevent the event of ignition in the space placed between the engine-room and the cargo tanks (usually the cargo pump-room). The interpretation proposed in document FP 51/9/10 would mean going back to the "one out of two principle" as, if there was filtering from the tanks to the space (even when the space only contains ballast or fuel transfer pumps) ignition of the gases could still happen because of a failure, for example, in electric equipment or in another ignition source located in the space. In light of the above, the Sub-Committee could not agree with the proposed interpretation, and decided to reconsider this matter as it was noted that IACS would submit a document on this issue to FP 54.

## 13 FIXED HYDROCARBON GAS DETECTION SYSTEMS ON DOUBLE-HULL OIL TANKERS

**General**

13.1 The Sub-Committee recalled that, at FP 51, having considered document MSC 82/21/12 (Austria, *et al.*), the Sub-Committee had agreed to instruct the Correspondence Group on Measures to Prevent Fires in Engine-Rooms and Cargo-Pump Rooms to consider the proposal contained in the aforementioned document and to submit the results to FP 52.

13.2 The Sub-Committee also recalled that, at FP 52, the Sub-Committee had established the Correspondence Group on Fixed Hydrocarbon Gas Detection Systems on Double-Hull Oil Tankers and approved terms of reference, as set out in paragraph 13.7 of document FP 52/21, and instructed the group to submit a report to FP 53.

13.3 It was further recalled that MSC 84, having considered document MSC 84/22/7 (France, Finland and Germany), had agreed to expand the existing high-priority item on "Fixed hydrocarbon gas detection systems on double-hull oil tankers" in the work programme of the Sub-Committee to consider also means to avoid explosions in double spaces of double-hull oil tankers after gas detection, in cooperation with the BLG Sub-Committee as necessary and when requested by the FP Sub-Committee, and extended the target completion date of the expanded item to 2010.

**Report of the correspondence group**

13.4 In considering the report of the Correspondence Group on Fixed Hydrocarbon Gas Detection Systems on Double-Hull Oil Tankers, the Sub-Committee approved it in general and took action as outlined hereunder.

13.5 The Sub-Committee agreed that fixed hydrocarbon gas detection systems should be required to be installed in ballast tanks and void spaces adjacent to cargo tanks located outside the oil tanker's cargo block area, such as forepeak tanks.

**Draft amendments to SOLAS regulation II-2/4.5.7**

13.6 Following an in-depth discussion, taking into account the urgent need expressed by various delegations to progress with the matter, the Sub-Committee decided to delete the square brackets in paragraph 5.7.3.1 of the draft amendments to SOLAS regulation II-2/4.5.7, and keep the text. Subsequently, the Sub-Committee agreed to the draft amendments to SOLAS regulation II-2/4.5.7 regarding gas measurement and detection, as set out in annex 19, for submission to MSC 86 for approval with a view to subsequent adoption.

**Proposed new chapter 16 of the FSS Code**

***Number and location of sampling points***

13.7 In considering whether the proposed new chapter 16 of the FSS Code should require a minimum number of sampling points for each space or that this should be determined through an assessment methodology which needs to be further developed as part of Guidelines, to be developed by the Organization, for the design, construction and testing of fixed hydrocarbon gas detection systems, the Sub-Committee agreed that the draft new chapter 16 should require a minimum of two sampling points and that the words "large spaces" in paragraph 2.2.1.3 of the draft text was a vague sentence and agreed to a minor modification to resolve this matter.

13.8 In light of the above, the Sub-Committee agreed that the proposed new chapter 16 of the FSS Code should define the positioning of the sampling points as follows:

.1 that the upper gas sampling point should not be located lower than 1 m from the tank top; and

.2 that the position of the lower located gas sampling point should be above the height of the girder of bottom shell plating but at least 0.5 m from the bottom of the tank.

***Maximum hydrocarbon gas concentration limit***

13.9 The Sub-Committee decided that the maximum limit of hydrocarbon gas concentration at which the gas analysing unit should automatically shut down and the maximum hydrocarbon gas concentration limit in the ballast/void spaces at which the alarms should be initiated in the cargo control room, navigation bridge and at the analysing unit, should be set at 30% of the lower flammable limit (LFL).

***Maintenance, calibration and operational verifications***

13.10 In considering whether guidelines for the maintenance, the calibration and operational verifications of the fixed hydrocarbon gas detection systems should be contained in the proposed new chapter 16 of the FSS Code, the Sub-Committee agreed that separate guidelines should be developed as a reference for the draft new chapter 16.

***Proposed new chapter 16 of the FSS Code***

13.11 In light of the above decisions, the Sub-Committee agreed to the draft new chapter 16 of the FSS Code on matters related to fixed hydrocarbon gas detection systems, set out in annex 20, for submission to MSC 86 for approval with a view to subsequent adoption.

**Other matters**

13.12 The Sub-Committee noted that the correspondence group did not have time to consider the following additional issues raised during its deliberations:

.1 should an alarm for fault condition be required?

.2 are both methods of measurement (point and open path detectors) allowed?

.3 is there any point detector system not allowed?

.4 is the response time necessary to be established?

and agreed to include the aforementioned issues in the terms of reference of the correspondence group.

13.13 Having considered the above issues and recognizing the necessity to make progress on this item, the Sub-Committee decided to instruct the correspondence group established under agenda item 3 (Performance testing and approval standards for fire safety systems), taking into account the comments and decisions made in plenary, to:

.1 further consider the issues contained in the report of the correspondence group established at FP 52 (FP 53/13, paragraphs 22 and 23); and

.2 develop the Guidelines for the design, construction and testing of fixed hydrocarbon gas detection system, with a view to finalization at FP 54 (see also paragraphs 3.38 and 3.39).

## 14 HARMONIZATION OF THE REQUIREMENTS FOR THE LOCATION OF ENTRANCES, AIR INLETS AND OPENINGS IN THE SUPERSTRUCTURES OF TANKERS

14.1 The Sub-Committee recalled that FP 51 had considered documents FP 51/9/4 and FP 51/9/7 (IACS), addressing acceptance criteria for the location of access doors to spaces facing the cargo area, and had agreed that a single comprehensive approach should be taken to harmonize the admissible distances required in the 1974 SOLAS Convention, as amended, and the IBC and IGC Codes for entrances, air inlets and openings in the superstructures of tankers, taking into account standard IEC 60092-502, the unified interpretations contained in MSC/Circ.474, MSC/Circ.1120 and MSC/Circ.1203 and document FP 51/9/4.

14.2 It was also recalled that, at FP 51, the Sub-Committee decided that a new item should be established in the Sub-Committee's work programme to consider the aforementioned matter in detail, and agreed to a justification for the proposal for a new work programme item, set out in annex 6 to document FP 51/19, for consideration by MSC 83.

14.3 The Sub-Committee further recalled that, at MSC 83, the Committee had endorsed the proposal by FP 51, and had decided to include, in the Sub-Committee's work programme, a high-priority item on "Harmonization of the requirements for the location of entrances, air inlets and openings in the superstructures of tankers", with two sessions needed to complete the item.

14.4 The Sub-Committee noted the information provided by the observer from IACS that the Unified interpretation contained in document FP 51/9/4 had been in use by IACS members since 1 January 2007. In this context, the delegations of the Netherlands, Norway and the United Kingdom advised that their delegations had already supported the IACS Unified interpretation at FP 51.

14.5 The Sub-Committee, recognizing the need to develop amendments to relevant regulations to harmonize the requirements for the location of entrances, air inlets and openings in the superstructures of tankers, including the incorporation of relevant unified interpretations developed by IMO and IACS, invited Member Governments and international organizations to submit relevant comments and proposals to FP 54.

## 15 AMENDMENTS TO SOLAS CHAPTER II-2 RELATED TO THE RELEASING CONTROLS AND MEANS OF ESCAPE FOR SPACES PROTECTED BY FIXED CARBON DIOXIDE SYSTEMS

15.1 The Sub-Committee recalled that FP 51 had noted that the Working Group on Performance Testing and Approval Standards, following consideration of annexes 9 and 10 to document FP 51/3/1 (Report of the correspondence group) and paragraph 11 of document FP 51/3/5 (Japan), had recognized that the existence of many single control systems, more than 20 years after the regulations were changed, presented an unacceptable level of risk to crew personnel.

15.2 The Sub-Committee also recalled that FP 51 had agreed to draft amendments to SOLAS regulation II-2/10, to require all carbon dioxide systems to have two separate releasing controls (FP 51/19, annex 2), taking into account that existing ships will have to comply with the above amendments by completion of the first scheduled dry-docking after 1 July 2009. Subsequently, the aforementioned amendments were adopted by resolution MSC.256(84), and are expected to enter into force on 1 January 2010.

15.3 It was further recalled that, at FP 51, the Sub-Committee had prepared a justification for the proposal for a new work programme item (FP 51/19, annex 3), which requested an extended review of safety matters relating to the installation of total flooding carbon dioxide systems, including system discharge control arrangements and criteria for the lighting and marking of the means of escape from the protected space.

15.4 The Sub-Committee noted that MSC 83 had endorsed the proposal by FP 51, and had decided to include, in the Sub-Committee's work programme, a high-priority item on "Amendments to SOLAS chapter II-2 related to the releasing controls and means of escape for spaces protected by fixed carbon dioxide systems", with two sessions needed to complete the item.

15.5 Having noted that no documents had been submitted to the session, the Sub-Committee, recognizing the need to progress this matter, invited Member Governments and international organizations to submit relevant comments and proposals to FP 54.

## 16 MEANS OF ESCAPE FROM MACHINERY SPACES

16.1 The Sub-Committee recalled that, at MSC 83, the Committee had considered document MSC 83/25/12 (Denmark and Norway), proposing to revise SOLAS regulation II-2/13 in order to further improve the SOLAS chapter II-2 requirements concerning means of escape from machinery spaces in passenger and cargo ships.

16.2 The Sub-Committee also recalled that, in light of the above, MSC 83 had agreed to include, in the Sub-Committee's work programme, a high-priority item on "Means of escape from machinery spaces", with two sessions needed to complete the item.

16.3 In considering document FP 53/16 (Denmark, Norway and Sweden), proposing amendments to SOLAS regulations II-2/13.4.1 and II-2/13.4.2 on means of escape from machinery spaces on cargo and passenger ships to introduce requirements on independent means of escape from enclosed working spaces, such as machinery control rooms and workshop spaces within machinery spaces, the Sub-Committee agreed, in principle, to the proposed SOLAS amendments.

16.4 Recognizing that there is a need for further consideration of the draft text, in particular, to clarify terms including "workshop spaces", "ladders shielded" and "access to the open deck", the Sub-Committee invited Member Governments and international organizations to submit pertinent comments and proposals to FP 54.

16.5 In this context, the delegation of Chile, highlighting the importance of the issue, informed the Sub-Committee of the fire incident in the machinery space of the Chilean-flagged ship **Rio Blanco**, which occurred in Santos, Brazil, in February 2008, where three crewmen died due to not being able to escape from the machinery space. In light of the above, the delegation of Chile expressed its strong support for the proposals contained in paragraphs 9 and 10 of document FP 53/16 regarding the need to provide a separate escape route for workshops and control rooms that are independent from the machinery space.

## 17 REVIEW OF FIRE PROTECTION REQUIREMENTS FOR ON-DECK CARGO AREAS

17.1 The Sub-Committee recalled that, at MSC 83, the Committee had considered document MSC 83/25/5 (Germany), proposing, in view of a number of on-deck cargo fires where both ship's crews and land-based assistance have not been able to cope with the individual casualty, to review the fire protection requirements of SOLAS chapter II-2 to address fire risks related to on-deck cargo areas.

17.2 The Sub-Committee also recalled that, in light of the above, MSC 83 had agreed to include, in the Sub-Committee's work programme, a high-priority item on "Review of fire protection requirements for on-deck cargo areas", with three sessions needed to complete the item, in co-operation with the DSC Sub-Committee, as necessary and when requested by the Sub-Committee.

17.3 Following consideration of documents:

.1 FP 53/17 (Germany), summarizing the status of fire protection for on-deck cargoes, focusing on containerized cargo, but excluding ro-ro cargo; discussing the related fire safety objectives contained in SOLAS regulation II-2/2; and presenting an overview of the ongoing Formal Safety Assessment (FSA) on fire safety of deck containers carried out by Germany; and

.2 FP 53/INF.2 (Germany), summarizing results from the first step of an ongoing FSA study for container fires on deck and providing the key data relating to the existing risk level,

the Sub-Committee agreed to further consider this matter at FP 54 taking into account the aforementioned FSA study.

17.4 In this context, the delegation of the Islamic Republic of Iran, while appreciating the FSA study being carried out by Germany on this matter and supporting its submission principles, expressed its concern with regard to the subject and informed the Sub-Committee of their study on fire protection of on-deck cargoes, particularly containers containing dangerous goods that is now under way and that the outcome will be reported to FP 54.

17.5 In light of the above developments, the Sub-Committee invited Member Governments and international organizations to submit relevant comments and proposals to FP 54.

## 18 EXPLANATORY NOTES FOR THE APPLICATION OF THE SAFE RETURN TO PORT REQUIREMENTS

18.1 The Sub-Committee recalled that, at MSC 84, the Committee had considered document MSC 84/22/2 (Italy), proposing to prepare explanatory notes for the recently adopted SOLAS amendments related to the safe return to port concept for passenger ships with a view to ensuring a uniform implementation of SOLAS regulations II-1/8-1, II-2/21 and II-2/22, and document MSC 84/INF.3, providing additional information on the work already carried out by the shipping industry towards consistent application of the aforementioned requirements.

18.2 It was also recalled that, in light of the above, MSC 84 had agreed to include, in the Sub-Committee's work programme and the provisional agenda for FP 53, a high-priority item on "Explanatory notes for the application of the safe return to port requirements", with a target completion date of 2010, in cooperation with the DE and SLF Sub-Committees, as necessary and when requested by the FP Sub-Committee.

18.3 Following consideration of document FP 53/18/1 (Italy and CLIA), containing draft Explanatory notes relevant to the safe return to port for passenger ships, the Sub-Committee agreed, in principle, to the draft Explanatory notes and noted the following comments:

.1 that there is a need for finalizing the draft Explanatory notes promptly, however, a further detailed consideration is necessary;

.2 the draft Explanatory notes need to clarify whether simultaneous fire and flooding casualties should be taken into account, including matters related to fire on external areas, damage to life-saving appliances and escape routes; and

.3 clarification of the term "critical systems" needs to be discussed.

18.4 In light of the above views, the Sub-Committee decided to instruct the drafting group established under agenda item 8 (Clarification of SOLAS chapter II-2 requirements regarding interrelation between central control station and safety centre) to prepare a consolidated text of the draft Explanatory notes based on the annex to document FP 53/18/1, taking into account the comments made in plenary, for consideration by the correspondence group to be established on the matter (see also paragraphs 8.4 and 8.5).

**Report of the drafting group**

18.5 Having considered the part of the report of the drafting group (FP 53/WP.7) related to this item, the Sub-Committee took action as outlined hereunder.

18.6 The Sub-Committee noted the group's view that the draft text of the Explanatory notes does not specify the chain of responsibility for the verification and the approval for the assessment of passenger ship systems' capabilities after a casualty, and endorsed the group's opinion that this matter should be addressed in the Explanatory notes.

18.7 Regarding the comments raised in plenary on the definition of the critical systems, the Sub-Committee noted the group's view that no changes were necessary since paragraphs 5 and 6 of the annex to document FP 53/18/1 were clear and that such systems should not remain critical at the end of the assessment.

18.8 In considering whether assessment of fire and flooding casualties needs to be carried out simultaneously or not, the Sub-Committee noted the opinion of the group that each casualty should be dealt with separately. In this context, the Sub-Committee, with regard to the two questions raised in plenary on whether the assessment should address the case of loss of assembly station and whether the assessment should include cases where life-saving appliances are lost, noted the group's opinion that:

.1 assembly stations are generally located in public space so the assessment may consider such spaces. If an assembly station is located on open deck, neither the fire casualty nor the flooding casualty is applicable. Therefore, in the opinion of the group no assessment is necessary; and

.2 the scenario related to life-saving appliances need not be taken into account as the safe return to port concept is based on the assumption that the ship should constitute its own best lifeboat and persons should remain on board.

18.9 Having noted the group's view that it would be beneficial for the users to also have the performance standards contained in MSC.1/Circ.1214 (Performance standards for the systems and services to remain operational on passenger ships for safe return to port and orderly evacuation and abandonment after a casualty), the Sub-Committee agreed that the above standards should be incorporated into the Explanatory notes.

18.10 The Sub-Committee endorsed the group's view that the SLF Sub-Committee should be informed on the progress made by the Sub-Committee in respect of the development of the Explanatory notes for the assessment of passenger ship system's capabilities for its consideration and comments as appropriate, in particular interpretations 15 and 69 in the annex to document FP 53/18/1. Subsequently, the Sub-Committee requested the Secretariat to inform SLF 52 of the above outcome.

18.11 In light of the above, the delegation of Germany expressed its opinion that the development of the Explanatory notes are a good industry standard, but should not hinder flexibility in the future development of this matter at the SLF Sub-Committee, which should take the lead on matters under its purview.

**Establishment of the correspondence group**

18.12 Having considered the above issues and recognizing the necessity to make progress on this item, the Sub-Committee established a correspondence group, under the co-ordination of Italy*, with the following terms of reference (see also paragraphs 3.34 and 8.9):

.1 to further consider document FP 53/WP.7 together with document FP 53/18/1 and prepare the final draft of the Explanatory notes for the application of safe return to port requirements, for consideration by FP 54; and

.2 to submit a report to FP 54.

## 19 ANALYSIS OF FIRE CASUALTY RECORDS

**Fire casualty on board the ro-ro cargo ship "Und Adriyatik"**

19.1 The Sub-Committee noted that MSC 85 had endorsed the decision of FSI 16 to request the Secretariat to provide the summary of events and preliminary findings on the fire on board the ro-ro cargo ship **Und Adriyatik** to the Sub-Committee for information on the main issues identified in this case.

19.2 In considering document FP 53/19 (Secretariat), containing information on the outcome of FSI 16, and the preliminary findings on the fire on board the ro-ro cargo ship **Und Adriyatik**, (FSI 16/6/2, annex), the Sub-Committee noted that the following main issues had been identified:

.1 cargo space volume fire risk;

.2 fire hazards from live ro-ro cargoes;

.3 structural fire protection;

.4 escape routes;

.5 smoke risk; and

.6 fixed fire installations.

19.3 Having considered the above document, the Sub-Committee, noting the preliminary findings of the accident investigation (FP 53/19), in the context of assessing the adequacy of current design and operational requirements for ro-ro cargo ships, agreed that these are important lessons to be learned from the final report of the investigation into the casualty, and decided to further consider the document at a later stage, after the full report is available.

---

* **Coordinator**:
Mr. C. Abbate
Country Manager
RINA USA, Inc
13450 W Sunrise Blvd
Sunrise, FL 33323, United States
Tel: +1 954 838 0408 (ext 212)
Mobile: +1 954 319 7181
Fax: +1 954 838 0409

19.4 In light of the above, the delegation of Turkey informed the Sub-Committee that, at FSI 16, the Governments of Turkey and Croatia had provided information by means of document FSI 16/6/2, containing preliminary findings of a marine accident investigation regarding the recent (February 2008) fire on board the Turkish flagged ro-ro cargo ship **Und Adriyatik,** jointly carried out by the Administrations of these Member States. The Turkish delegation expressed its appreciation to the due consideration given to the preliminary findings by the FSI and FP Sub-Committees and the course of action decided upon by FSI 16. The delegation further informed the Sub-Committee that the investigation had been finalized; however, the full report has yet to be completed. They informed the Sub-Committee of the intention of the Government of Turkey, with the consent of the Croatian Maritime Administration, to submit the full report to IMO as soon as possible, hopefully before FSI 17, by means of GISIS, so that the final findings can be duly taken into account by all the relevant IMO bodies.

**Fire casualty on board the fishing factory vessel "Hercules"**

19.5 In considering document FP 53/19/1 (Denmark and the Faroe Islands), providing information on the very serious fire that occurred in April 2007 on the Faroese fishing factory vessel **Hercules**, the Sub-Committee noted that:

.1 lamp fixtures of poor quality had caused the fire;

.2 fire-fighting and the search for crew members in the accommodation was transitory due to the lack of air supply in the smoke divers' air breathing apparatuses; and

.3 the recommendations proposed amendments to the 1974 SOLAS Convention, as amended.

19.6 The Sub-Committee, taking into account that draft amendments to the SOLAS Convention were outside the scope of this agenda item, agreed to invite the delegation of Denmark to submit a proposal to the Committee for a new work programme item, in accordance with the Guidelines on the organization and method of work.

19.7 In light of the above, the Sub-Committee requested the Secretariat to forward document FP 53/19/1 to FSI 17 for consideration.

## 20 WORK PROGRAMME AND AGENDA FOR FP 54

**Work programme and provisional agenda for FP 54**

20.1 The Sub-Committee revised its work programme (FP 53/WP.4) based on that approved by MSC 85 (FP 53/2/1, annex) and, taking into account the progress made during this session, prepared a draft revised work programme and draft provisional agenda for FP 54. While reviewing the work programme, the Sub-Committee agreed to invite the Committee to:

.1 delete the following work programme items, as work on them has been completed:

.1.1 item H.3 – Development of provisions for gas-fuelled ships;

.1.2 item H.4 – Measures to prevent fires in engine-rooms and cargo pump-rooms; and

.1.3 item H.10 – Guidelines for drainage systems in closed vehicle and ro-ro spaces and special category spaces;

.2 extend the target completion date of the following work programme items:

.2.1 item H.2 – Comprehensive review of the Fire Test Procedures Code, to 2010;

.2.2 item H.5 – Fire resistance of ventilation ducts, to 2010;

.2.3 item H.7 – Clarification of SOLAS chapter II-2 requirements regarding interrelation between central control station and safety centre, to 2010; and

.2.4 item H.13 – Measures to prevent explosions on oil and chemical tankers transporting low-flashpoint cargoes, to 2011;

.3 replace the number of sessions needed for completion of the following work programme items by the target completion date, as the items have been included in the provisional agenda for FP 54:

.3.1 item H.13 – Fire integrity of bulkheads and decks of ro-ro spaces on passenger and cargo ships 2011;

.3.2 item H.14 – Requirements for ships carrying hydrogen and compressed natural gas vehicles 2011;

.4 renumber the work programme items accordingly.

20.2 The Committee was invited to approve the draft revised work programme and draft provisional agenda for FP 54, as set out in annex 21.

**High-level Action Plan of the Organization and priorities for the 2008-2009 biennium**

20.3 The Sub-Committee agreed to the status of the planned outputs of the High-level Action Plan of the Organization and priorities for the 2008-2009 biennium relating to the Sub-Committee's work, as set out in annex 22.

20.4 In this context, the Sub-Committee noted that the Committee had agreed that, if the Strategic Plan and the table of planned output are to be used to manage the work programme of the Committees and sub-committees, then proper guidelines should be developed and the Committees' Guidelines should be reviewed accordingly. In the context of the above, the Sub-Committee further noted that the Committee had agreed that the agenda management procedure specified in paragraphs 3.13 to 3.25 of the Committees' Guidelines should be applied so that the agendas of all the Sub-Committees are manageable.

**Arrangements for the next session**

20.5 The Sub-Committee agreed to establish, at its next session, working groups on the following subjects:

.1 performance testing and approval standards for fire safety systems;

.2 measures to prevent explosions on oil and chemical tankers transporting low-flashpoint cargoes; and

.3 explanatory notes for the application of the safe return to port requirements.

20.6 The Sub-Committee also agreed to establish drafting groups on:

.1 fixed hydrocarbon gas detection systems on double-hull oil tankers; and

.2 comprehensive review of the Fire Test Procedures Code.

20.7 The Sub-Committee established correspondence groups on the following subjects, due to report to FP 54:

.1 performance testing and approval standards for fire safety systems;

.2 explanatory notes for the application of the safe return to port requirements; and

.3 recommendation on evacuation analysis for new and existing passenger ships.

**Urgent items for consideration at MSC 87**

20.8 Noting the close proximity between FP 54 (April 2010) and MSC 87 (May 2010), the Sub-Committee invited MSC 86 to agree that, in addition to its work programme and agenda for FP 55, the outcome of FP 54 on the following items should be urgent matters to be considered at MSC 87:

.1 measures to prevent explosions on oil and chemical tankers transporting low-flashpoint cargoes;

.2 clarification of SOLAS chapter II-2 requirements regarding interrelation between central control station and safety centre;

.3 Explanatory notes for the application of the safe return to port requirements; and

.4 fixed hydrocarbon gas detection systems on double-hull oil tankers.

20.9 The Sub-Committee noted that its fifty-fourth session had been tentatively scheduled to take place from 12 to 16 April 2010.

## 21 ELECTION OF CHAIRMAN AND VICE-CHAIRMAN FOR 2010

21.1 In accordance with the Rules of Procedure of the Maritime Safety Committee, the Sub-Committee unanimously re-elected Mr. J.C. Cubisino (Argentina) as Chairman and Mr. C. Abbate (Italy) as Vice-Chairman, both for 2010.

## 22 ANY OTHER BUSINESS

**Codes, recommendations, guidelines and other non-mandatory instruments**

22.1 In considering document FP 53/22 (Secretariat) on codes, recommendations, guidelines and other non-mandatory instruments, the Sub-Committee noted that MSC 83:

.1 when considering the list of codes, recommendations, guidelines and other safety- and security-related non-mandatory instruments relating to the work of the Committee (MSC 82/18/1 and MSC 82/INF.12, consideration of the documents had been postponed from MSC 82 to MSC 83), referred the detailed consideration of the list to the relevant sub-committees for the identification of those

instruments which might be relevant in the context of the collection of information on their implementation, also requesting them to provide an input on potential users and requirements of the data scheme to be established; and

.2 noted in this connection that the Secretariat is developing a module of the IMO Global Integrated Shipping Information System (GISIS) on safety- and security-related non-mandatory requirements and recommendations, on the basis of MSC/Circ.815. When completed, the module could also contain information on the status of implementation of non-mandatory instruments to be kept updated by the Member States themselves using direct recording facilities. The module could also record, on a voluntary basis, for each instrument the national legislation adopted for its implementation – including the ability to upload its full text – the application criteria and the status of the instrument with regard to amendments.

22.2 In view of the length of the list annexed to document FP 53/22, containing 133 non-mandatory instruments, and the above information regarding the further development of GISIS, the Sub-Committee agreed to support, in general, the development of a GISIS module on non-mandatory requirements and recommendations to be kept updated by the Secretariat, and invited individual Member States to use the GISIS reporting facilities to enter information on the implementation of those requirements and recommendations and to upload the corresponding national legislation, as deemed appropriate.

22.3 The Sub-Committee invited the Committee to note the above outcome on the matter.

**Amendments to the MODU Code**

22.4 In considering document FP 53/22/1 (Secretariat) on the outcome of DE 51 on amendments to the MODU Code, the Sub-Committee noted that DE 51 had:

.1 agreed that a draft revised Code should be prepared, as opposed to draft amendments to the Code, since this would be more user-friendly, and that it should be finalized at DE 52, with a view to submission to MSC 86 for approval;

.2 established a working group to further develop the text of the draft revised MODU Code, agreed to refer the parts of the draft revised Code related to fire safety to FP 53 and requested the Secretariat to take action accordingly; and

.3 in addition to considering chapter 9 (Fire safety) of the draft revised MODU Code, invited the Sub-Committee to consider the square brackets in the definition of "oil fuel unit", in section 1.3 (the parts of the draft revised Code to be considered by the Sub-Committee have been reproduced in the annex).

22.5 The Sub-Committee considered the draft revised MODU Code developed by the DE Sub-Committee on matters related to fire safety (FP 53/22/1, annex) and agreed to modifications to table 9-3.

22.6 The observer from IADC invited the Sub-Committee to instruct the drafting group, if time permitted, and in the spirit of co-operation and assistance between the sub-committees, to also consider chapter 13 (Helicopter facilities) of the draft revised MODU Code in light of information provided by the Secretariat regarding recent decisions by ICAO. In noting that DE 52 (16 to 20 March 2009) will not establish a drafting group on the matter, the Sub-Committee agreed to instruct the drafting group to also consider chapter 13 of the draft revised MODU Code (DE 52/5, annex) for referral to the DE Sub-Committee.

***Establishment of the drafting group***

22.7 Recalling its relevant decision at FP 52 regarding a drafting group, the Sub-Committee, recognizing the necessity to make progress on this item, established the Drafting Group on Amendments to the MODU Code and, taking into account the comments and decisions made in plenary, instructed it to:

.1 finalize the text of the draft revised MODU Code on matters related to fire safety, taking into account document FP 53/22/1, for consideration by the Sub-Committee; and

.2 review chapter 13 (Helicopter facilities) of the draft revised MODU Code, set out in the annex to document DE 52/5, taking into account recent decisions by ICAO, for referral to DE 52 for consideration.

***Report of the drafting group***

22.8 Having received the report of the drafting group (FP 53/WP.6), the Sub-Committee approved it in general and took action as outlined hereunder.

***Proposed amendments to chapters 1 and 9 of the draft revised MODU Code***

22.9 The Sub-Committee agreed to the proposed amendments to chapters 1 (General) and 9 (Fire Safety) of the draft revised MODU Code, as set out in annex 1 to document FP 53/WP.6, for referral to DE 52 for co-ordination purposes.

22.10 In this context, the delegation of the United Kingdom expressed its views that there are considerable changes in the draft text and that it may reserve its position at DE 52.

***Proposed amendments to chapter 13 (Helicopter installations) of the draft revised MODU Code***

22.11 The Sub-Committee noted the proposed modifications to chapter 13, as set out in annex 2 to document FP 53/WP.6, and requested the Secretariat to forward them to DE 52 for consideration, as appropriate.

22.12 In this context, the Sub-Committee noted that, in addition to the modifications to chapter 13, the group also prepared revised definitions of "D or D-value" and "Helideck", in section 1.3 of chapter 1, since they are related to chapter 13, in order to assure its complete harmonization with the definitions provided by ICAO, and requested the Secretariat to bring to the attention of DE 52 the group's recommendations related to section 1.3 (FP 53/WP.6, paragraph 9 and annex 2).

**Draft amendments to the interpretations of the 2000 HSC Code and SOLAS chapter X (MSC/Circ.1102)**

22.13 The Sub-Committee considered document FP 53/22/2 (Norway), proposing amendments to the interpretations of the 2000 HSC Code and SOLAS chapter X (MSC/Circ.1102) by including an interpretation of paragraph 7.4.1.3 of the 2000 HSC Code on the application of fire-restricting materials on high-speed craft and, having agreed that this proposal should be considered as a new work programme item, invited the delegation of Norway to submit an appropriate proposal to the Committee in accordance with the Guidelines on the organization and method of work.

**Water curtains for preventing smoke spread upwards through large openings**

22.14 The Sub-Committee noted with appreciation the document submitted by Finland (FP 53/22/3), providing background information on the effect of water curtains in preventing the effects of fire through deck openings.

**Revised MEPC.1/Circ.511**

22.15 In considering document FP 53/22/4 (Secretariat) on the outcome of DE 51 and MEPC 58 with regard to bilge and sludge handling issues, the Sub-Committee noted that:

.1 DE 51 had established a working group and instructed it, particularly, to finalize the draft amendments to the Revised Guidelines for systems for handling oily wastes in machinery spaces of ships incorporating guidance notes for an integrated bilge water treatment system (IBTS) (MEPC.1/Circ.511);

.2 in considering the report of the working group (DE 51/WP.3), the DE Sub-Committee had noted the group's concerns over the safety issues associated with the heating of oil residue (sludge) to a level likely to be above its flashpoint, as a method to reduce its water content, and had requested the FP Sub-Committee to consider the issue and provide advice to the MEPC accordingly;

.3 in light of the above, MEPC 58, in noting the request of DE 51, had noted also the concerns on this issue expressed in document MEPC 58/10/5 (Marshall Islands, INTERTANKO, ICS and OCIMF) but agreed that the work tasked to the FP Sub-Committee should continue. In this context, Member Governments were invited to submit any relevant information to the FP Sub-Committee which may facilitate the work on this matter in order that further decisions may be taken at MEPC 59; and

.4 notwithstanding the above, MEPC 58 had approved the 2008 Revised Guidelines for systems for handling oily wastes in machinery spaces of ships incorporating guidance notes for an integrated bilge water treatment system (IBTS) (MEPC.1/Circ.642).

22.16 In considering the matter, the Sub-Committee noted that:

.1 in general, fuel oil used on board ships cannot have a flashpoint below 60°C (SOLAS regulation II-2/4.2.1.1);

.2 oil residue, and in particular sludge, normally has a flashpoint much higher than the aforementioned limit, due to water and other heavy fuel oil content of the mixture;

.3 the Revised Guidelines for systems for handling oily wastes in machinery spaces of ships incorporating guidance notes for an integrated bilge water treatment system (IBTS) (MEPC.1/Circ.511) and the 2008 Revised Guidelines (MEPC.1/Circ.642) recommend that the tank heating system should be designed so as to enable heating of the oil sludge up to 60°C (MEPC.1/Circ.511, paragraph 10.1.3 and MEPC.1/Circ.642, paragraph 10.1.2);

.4 incinerators are protected with a local fixed fire-extinguishing system (SOLAS regulation II-2/10.5.6.3); and

.5 air piping systems for oil residues tanks are built under the same safety regulations as air piping systems of combustible tanks.

22.17 The Sub-Committee, therefore, agreed that there was no need for additional fire safety measures associated with the heating of oil residue (sludge), and requested the Secretariat to inform MEPC 59 of the aforementioned conclusion.

**Safety of small fishing vessels**

22.18 The Sub-Committee noted that SLF 51 had agreed to re-establish the Correspondence Group on Safety of Small Fishing Vessels, and instructed it, in particular, to further develop the draft Safety recommendations for decked fishing vessels of less than 12 metres in length and undecked fishing vessels, taking into consideration the outcomes of FP 53, DE 52 and SLF 51, and prepare a consolidated text thereof as appropriate. The Sub-Committee also noted that the work on the draft Safety recommendations is expected to be finalized by SLF 52 in January 2010.

22.19 The Sub-Committee agreed to the draft Safety recommendations on matters related to general provisions and fire safety (FP 52/18/2 and Add.1), with the following minor editorial modifications:

.1 in chapter 1, the fourth sentence in paragraph 1.1 should be deleted;

.2 in chapter 5, paragraph 5.4.2 should be deleted and the remaining paragraphs renumbered; and

.3 in chapter 5, in the table in paragraph 5.7.1, "0" should be replaced with "1" in the third row of the second column and delete the words "after consultation with fishermen" in footnote c) should be deleted,

for referral to the SLF Sub-Committee for coordination purposes.

**Revision of the Recommendations for entering enclosed spaces aboard ships**

22.20 In noting that MSC 85, following consideration of a proposal by DSC 13 in the context of the DSC Sub-Committee's work programme, had agreed to include, in the work programme of the FP Sub-Committee, a high-priority item on "Revision of the Recommendations for entering enclosed spaces aboard ships", with a target completion date of 2010, having assigned the DSC Sub-Committee as a coordinator and had instructed FP 53 to give a preliminary consideration to the matter and to include the item in the provisional agenda for FP 54, the Sub-Committee invited Member Governments and international organizations to submit comments and proposals on this matter to FP 54.

**International co-operation on the grounding of a Bahamas registered cruise vessel**

22.21 The Sub-Committee noted the information provided by the delegation of the Bahamas regarding a great international co-operation that took place on 17 February 2009, in Antarctica, following the regrettable grounding of a Bahamas registered cruise vessel. The ice-strengthened 2,118 gross tonnage **Ocean Nova** was anchored off Denham Island with 76 passengers and 30 crew on board. In the early hours, the wind increased to over 60 knots

and the vessel dragged anchor. Despite the best efforts, the ship grounded near to the Argentinean research base, San Martin. With the active co-ordination of both the Argentinean and Chilean authorities, the Spanish naval vessel **Hesperides** was asked to assist. The **Hesperides** and a second Bahamian cruise ship (the clipper **Adventure**) were then able to re-float the **Ocean Nova** on the high tide, and all passengers were transferred to the clipper **Adventure**. Spanish Naval divers from **Hesperides** then inspected the vessel's hull and found no significant damage. It was noted that there were no injuries to the crew or passengers and no pollution. The **Ocean Nova** was then able to get underway for Ushuaia. In this context, the delegation of the Bahamas expressed its sincere thanks to all those involved, especially the Captain, officers and crew of the Spanish naval vessel **Hesperides** for their great assistance in this matter.

22.22 In light of the above, the delegations of Argentina, Chile and Spain acknowledged the expression of appreciation of the delegation of the Bahamas.

**Test laboratories recognized by the Administrations**

22.23 The Secretariat informed the Sub-Committee that the latest annual FP circular on Test laboratories recognized by the Administrations had been published as FP.1/Circ.36, dated 5 January 2009.

**Halon banking and reception facilities**

22.24 The Sub-Committee noted information provided by the Secretariat that the latest annual FP circular on Halon banking and reception facilities had been published as FP.1/Circ.37, dated 5 January 2009.

## 23 ACTION REQUESTED OF THE COMMITTEES

23.1 The Maritime Safety Committee, at its eighty-sixth session, is invited to:

.1 approve the draft MSC circular on Revised Guidelines for the performance and testing criteria, and surveys of foam concentrates for fixed fire-extinguishing systems (paragraph 3.17 and annex 1);

.2 approve the draft amendments to chapter 10 of the FSS Code, regarding sample extraction smoke detection systems (paragraph 3.19 and annex 4);

.3 approve the draft MSC circular on Guidance for application of the revised chapter 5 of the FSS Code, as adopted by resolution MSC.206(81) (paragraph 3.24 and annex 5);

.4 approve the draft amendments to chapter 1 of the FSS Code, in order to make it clear that amendments to the Code adopted after 1 July 2002 should, unless expressed otherwise, apply only to ships constructed on or after the date on which the amendments enter into force (paragraph 3.25 and annex 6);

.5 approve the draft MSC circular on Application of SOLAS regulation II-2/10 and chapter 12 of the FSS Code related to emergency fire pump capacity (paragraph 3.27 and annex 7);

.6 adopt the draft MSC resolution on Amendments to the Revised Guidelines for approval of sprinkler systems equivalent to that referred to in SOLAS regulation II-2/12 (resolution A.800(19)) (paragraph 3.28 and annex 8);

.7 approve the draft MSC circular on Guidelines for the approval of fixed dry chemical powder fire-extinguishing systems for the protection of ships carrying liquefied gases in bulk (paragraph 3.29 and annex 9);

.8 approve the draft MSC circular on Guidelines on determining the no observed adverse effect level (NOAEL) and lowest observed adverse effect level (LOAEL) values for halocarbon fire-extinguishing agents (paragraph 3.32 and annex 10);

.9 endorse the Sub-Committee's action in approving and issuing FP.1/Circ.38 on Explosion of an engine mock-up during test (paragraph 3.33);

.10 approve the draft MSC circular on Application for existing approvals according to the Revised Guidelines for the approval of equivalent fixed gas fire-extinguishing systems, as referred to in SOLAS 74, for machinery spaces and cargo pump-rooms (MSC/Circ.848) (paragraph 3.35 and annex 11);

.11 approve the draft MSC circular on Guidelines for maintenance and inspections of fixed carbon dioxide fire-extinguishing systems (paragraph 3.36 and annex 12);

.12 approve the draft MSC circular on Recommendation for the evaluation of fire performance and approval of large fire doors (paragraph 4.14 and annex 13);

.13 approve, in principle, the draft International Code for the Application of Fire Test Procedures, 2010 (2010 FTP Code) and the associated draft MSC resolution, with a view to adoption at MSC 87 (paragraph 4.26 and annex 14);

.14 approve the draft amendments to SOLAS regulation II-2/1, with a view to adoption at MSC 87 (paragraph 4.28 and annex 15);

.15 note the Sub-Committee's consideration of matters related to measures to prevent explosions on new oil and chemical tankers transporting low-flash point cargoes (paragraphs 5.1 to 5.28);

.16 approve the draft MSC circular on Guidelines for the drainage of fire-fighting water from closed vehicle and ro-ro spaces and special category spaces of passenger and cargo ships (paragraph 7.11 and annex 16);

.17 approve the draft MSC circular on Guidelines for measures to prevent fires in engine-rooms and cargo pump-rooms (paragraph 10.5 and annex 17);

.18 note that the Sub-Committee finalized chapters II and III of the draft Interim Guidelines on safety for gas-fuelled engine installations in ships relating to fire protection, for referral to the BLG Sub-Committee for coordination purposes (paragraphs 11.3 and 11.4);

.19 approve the draft MSC circular on Unified interpretations of SOLAS chapter II-2 (paragraph 12.10 and annex 18);

.20 approve the draft amendments to SOLAS regulation II-2/4.5.7, regarding gas measurement and detection, with a view to adoption at MSC 87 (paragraph 13.6 and annex 19);

.21 approve the draft new chapter 16 of the FSS Code on matters related to fixed hydrocarbon gas detection systems, with a view to adoption at MSC 87 (paragraph 13.11 and annex 20);

.22 approve the draft revised work programme of the Sub-Committee and the draft provisional agenda for FP 54 (paragraph 20.2 and annex 21);

.23 endorse the status of planned outputs of the High-level Action Plan of the Organization and priorities for the 2008-2009 biennium, relating to the Sub-Committee's work (paragraph 20.3 and annex 22);

.24 note the outcome of the Sub-Committee's consideration of matters related to codes, recommendations, guidelines and other non-mandatory instruments (paragraphs 22.2 and 22.3);

.25 note that the Sub-Committee finalized draft amendments to the MODU Code on matters related to fire protection, for referral to the DE Sub-Committee for coordination purposes (paragraphs 22.5 to 22.12);

.26 note that the Sub-Committee agreed to the provisions of the draft Safety recommendations for decked fishing vessels of less than 12 metres in length and undecked fishing vessels, relating to general provisions and fire safety, for referral to the SLF Sub-Committee for coordination purposes (paragraph 22.19); and

.27 approve the report in general.

23.2 The Maritime Safety Committee, at its eighty-seventh session, is invited to:

.1 approve the draft amendments to SOLAS regulation II-2/7.4.1, regarding fixed fire detection and fire alarm systems, with a view to adoption at MSC 88 (paragraph 3.18 and annex 2); and

.2 approve the draft amendments to chapter 9 of the FSS Code, regarding fixed fire detection and fire alarm systems, with a view to adoption at MSC 88 (paragraph 3.18 and annex 3).

23.3 The Marine Environment Committee, at its fifty-ninth session, is invited to endorse the Sub-Committee's conclusions that there was no need for additional fire safety measures associated with the heating of oil residue (sludge) on the 2008 Revised Guidelines for systems for handling oily wastes in machinery spaces of ships incorporating guidance notes for an integrated bilge water treatment system (IBTS) (MEPC.1/Circ.642) (paragraphs 22.16 and 22.17).

***

# ANNEX 1

## DRAFT MSC CIRCULAR

## REVISED GUIDELINES FOR THE PERFORMANCE AND TESTING CRITERIA, AND SURVEYS OF FOAM CONCENTRATES FOR FIXED FIRE-EXTINGUISHING SYSTEMS

1 The Maritime Safety Committee, at its sixtieth session (6 to 10 April 1992), approved Guidelines for the performance and testing criteria, and surveys of low-expansion foam concentrates for fixed fire-extinguishing systems (MSC/Circ.582).

2 The Committee, at its sixty-eighth session (28 May to 6 June 1997), approved Guidelines for the performance and testing criteria, and surveys of expansion foam concentrates for fixed fire-extinguishing systems of chemical tankers (MSC/Circ.799).

3 The Sub-Committee on Fire Protection, at its fifty-third session (16 to 20 February 2009) reviewed the aforementioned guidelines and made amendments to the test methods for both types of foam concentrates which combined the test procedure into one document.

4 The Committee, at its [eighty-sixth session (27 May to 5 June 2009)], after having considered the above proposal by the Sub-Committee on Fire Protection, at its fifty-third session, approved the Revised Guidelines for the performance and testing criteria, and surveys of foam concentrates for fixed fire-extinguishing systems, as set out in the annex.

5 Member Governments are invited to apply the annexed Guidelines when approving foam concentrates for fixed fire-extinguishing systems onboard tankers and chemical tankers and bring them to the attention of ship designers, shipowners, equipment manufacturers, test laboratories and other parties concerned.

6 This circular supersedes MSC/Circ.582 and Corr.1, and MSC/Circ.799. Type approvals conducted in accordance with the aforementioned guidelines should remain valid until 1 July 2012.

ANNEX

# REVISED GUIDELINES FOR THE PERFORMANCE AND TESTING CRITERIA, AND SURVEYS OF FOAM CONCENTRATES FOR FIXED FIRE-EXTINGUISHING SYSTEMS

## 1 GENERAL

### 1.1 Application

These Guidelines apply to the foam concentrates used for fixed deck foam fire-extinguishing systems required for tankers by SOLAS regulations II-2/10.8 and chapter 14 of the International Code for Fire Safety Systems (FSS Code), and chemical tankers as specified by SOLAS regulation II-2/1.6.2.1.2 and the International Code for the Construction and Equipment of Ships Carrying Dangerous Chemicals in Bulk (IBC Code). These Guidelines also apply to foam concentrates for fixed foam fire-extinguishing systems in machinery spaces according to chapter 6 of the FSS Code and to portable foam applicators according to chapter 4 of the FSS Code. These Guidelines do not apply to the foam generating equipment, only the foam concentrate.

### 1.2 Definitions

For the purpose of these Guidelines, the following definitions apply:

1.2.1 *Foam (fire fighting)* is an aggregate of air filled bubbles formed from an aqueous solution of suitable foam concentrate.

1.2.2 *Foam solution* is a solution of foam concentrate and water.

1.2.3 *Foam concentrate* is a liquid which, when mixed with water in the appropriate concentration, gives a foam solution.

1.2.4 *Expansion ratio* is the ratio of the volume of foam to the volume of foam solution from which it was made.

1.2.5 *Spreading coefficient* is a measurement of the ability of one liquid to spontaneously spread across another.

1.2.6 *25% (50%) drainage time* is the time for 25% (50%) of the liquid content of a foam to drain out.

1.2.7 *Gentle application* is the application of foam to the surface of a liquid fuel via a backboard, tank wall or surface.

1.2.8 *Sediment* is insoluble particles in the foam concentrate.

1.2.9 *Aqueous film-forming foam concentrate (AFF)* is a foam concentrate based on a mixture of hydrocarbon and fluorinated surface active agents.

1.2.10 *Alcohol–resistant foam concentrate (AR)* is a foam concentrate that is resistant to breakdown when applied to the surface of alcohol or other polar solvents.

1.2.11 *Film-forming fluoroprotein foam concentrate (FFFP)* is a foam concentrate which has the ability to form an aqueous film on the surface of some hydrocarbons.

1.2.12 *Fluoroprotein foam concentrate (FP)* is a protein foam concentrate with added fluorinated surface active agents.

1.2.13 *Protein foam concentrate (P)* is a foam concentrate made from hydrolyzed protein materials.

1.2.14 *Synthetic foam concentrate (S)* is a foam concentrate based on a mixture of hydrocarbon surface active agents and which may contain fluorocarbons with additional stabilizers.

1.2.15 *Type A foam concentrates* are alcohol-resistant or multi-purpose foam concentrates.

1.2.16 *Type B foam concentrates* are all regular type foam concentrates that are not alcohol-resistant, including fluoroprotein and aqueous film-forming (AFF) foam concentrates.

## 2 SAMPLING PROCEDURE

The sampling method should ensure representative samples which should be stored in filled containers.

The sample size should be:

.1 2 x 20 *l* containers (or other standard shipping containers) for type tests (see section 3); and

.2 2 *l* for periodical controls (see section 4).

## 3 TESTS FOR TYPE APPROVAL OF FOAM CONCENTRATES

For foam concentrate type approval, the tests under paragraphs 3.1 to 3.14 below should be performed by the foam concentrate manufacturer at laboratories acceptable to the Administration.

### 3.1 Freezing and thawing

3.1.1 Before and after temperature conditioning in accordance with paragraph 3.1.2 below, the foam concentrate should show no visual sign of stratification, non-homogeneity or sedimentation.

3.1.2 Freezing and thawing test:

.1 apparatus:

.1 freezing chamber, capable of achieving temperatures required, as stated in paragraph 3.1.2.2.1 below;

.2 polyethylene tube, approximately 10 mm diameter, 400 mm long and sealed and weighted at one end, with suitable spacers attached. Figure 1 shows a typical form; and

.3 500 ml cylinder, approximately 400 mm high and 65 mm in diameter.

.2 procedure:

.1 set the temperature of the freezing chamber to a temperature which is 10ºC below the freezing point of the sample measured in accordance with standard BS 5117, section 1.3 (excluding 5.2 in the standard). To prevent the glass measuring cylinder from breaking, due to expansion of the foam concentrate on freezing, insert the tube into the measuring cylinder, sealed end downward, weighted if necessary to avoid flotation, and the spacers ensuring it remains approximately on the central axis of the cylinder. Place the cylinder with the sample in the chest, cool it and maintain at the required temperature for 24 h. At the end of this period, thaw the sample for not less than 24 h and not more than 96 h in an ambient temperature of 20 to 25ºC;

.2 repeat the procedure described in the above subparagraph three times to give four cycles of freezing and thawing; and

.3 condition the sample for 7 days at 60ºC followed by one day at room temperature. The sample shall then be examined for visual signs of stratification, non-homogeneity or sedimentation.

**3.2 Heat stability**

An unopened 20 *l* container (or other standard shipping container), as supplied by the manufacturer from a production batch, should be maintained for 7 days at 60ºC, followed by one day at room temperature. Following this conditioning, the foam liquid after agitating/stirring will be subjected to the fire test as per subsection 3.9. Only fire tests as per subsection 3.9 should be performed with the heat conditioned sample.

**3.3 Sedimentation**

3.3.1 Any sediment in the concentrate prepared in accordance with section 2 should be dispersible through a 180 µm sieve, and the percentage volume of sediment should not be more than 0.25% when tested in accordance with paragraph 3.3.2 below.

3.3.2 The test should be carried out as follows:

.1 apparatus:

.1 graduated centrifuge tubes;

.2 centrifuge operating at 6,000 ± 100 $m/s^2$;

.3 180 µm sieve complying with standard ISO 3310-1; and

.4 plastic wash bottle.

**Note:** a centrifuge and tubes complying with standard ISO 3734 are suitable.

.2 procedure: centrifuge each sample for 10 min. Determine the volume of the sediment and determine the percentage of this volume with respect to the centrifuged sample volume. Wash the contents of the centrifuge tube onto the sieve and check that the sediment can or cannot be dispersed through the sieve by the jet from the plastic wash bottle.

**Note:** It is possible that the test method is not suitable for some non-Newtonian foam concentrates. In this case an alternative method, to the satisfaction of the Administration, should be used so that compliance with this requirement can be verified.

**3.4 Kinematic viscosity**

3.4.1 The test should be carried out according to standard ASTM D 445-86 or ISO 3104. Kinematic viscosity should not exceed 200 $mm^2/s$.

3.4.2 The method for determining viscosity of non-Newtonian foam concentrates or kinematic viscosity exceeding 200 $mm^2/s$ should be to the satisfaction of the Administration. A suitable method is described in EN 1568.

**3.5 pH value**

The pH of the foam concentrate prepared in accordance with section 2 should be not less than 6.0 and not more than 9.5 at 20 ± 2ºC.

**3.6 Film formation of the foam solution (if applicable)**

3.6.1 The spreading coefficient should be determined using the following formula:

$$S = T_c - T_s - T_i$$

where:

$S$ is the spreading coefficient;

$T_c$ is the surface tension of cyclohexane (N/m);

$T_s$ is the surface tension of the foam solution (N/m);

$T_i$ is the interfacial tension between the foam solution and cyclohexane (N/m).

$T_c$, $T_s$ and $T_i$ should be determined according to paragraph 3.6.2 below.

The spreading coefficient $S$ should be greater than 0.

3.6.2 *Determination of $T_c$, $T_s$ and $T_i$*

.1 materials:

.1 solution of foam concentrate, at the recommended usage concentration in distilled water complying with standard ISO 3696; and

**Note:** The solution may be made up in a 100 m*l* volumetric flask using a pipette to measure the foam concentrate.

.2 for $T_c$ and $T_i$, cyclohexane of purity not less than 99%;

.2 procedures for surface tension: determine $T_s$ at a temperature of 20 ± 2ºC using the ring or plate method of standard ISO 304; and

.3 procedure for interfacial tension: after measuring the surface tension in accordance with subparagraph .2 above, introduce a layer of cyclohexane at 20 ± 2ºC onto the foam solution, being careful to avoid contact between the ring or plate and the cyclohexane. Wait 6 ± 1 min and measure $T_i$.

**3.7 Expansion ratio**

3.7.1 The test should be carried out according to paragraph 3.7.2 with simulated sea water at about 20ºC having the characteristics stated in paragraph 3.7.3.

3.7.2 *Determination of the expansion ratio*

.1 apparatus:

.1 plastic collecting vessel of volume *V*, known to ± 16 m*l*, as shown in figure 2, equipped with a bottom discharge facility;

.2 foam collector, as shown in figure 3; and

.3 foam making equipment with nozzle, as shown in figure 4, which when tested with water has a flow rate of 11.4 *l*/min at a nozzle pressure of 6.3 ± 0.3 bar;

.2 procedure:

.1 check that the pipe work and hose from the foam solution tank to the nozzle is completely full of solution. Set up the nozzle horizontally directly in front of the foam collector with the front of the nozzle 3 ± 0.3 m from the top edge of the collector. Wet the vessel internally and weigh it ($W_1$). Set up the foam equipment and adjust the nozzle pressure to give a flow rate of 11.4 *l*/min. Discharge the foam and adjust the height of the nozzle so that the discharge strikes the collector centrally. Keep the nozzle horizontal. Stop the foam discharge and rinse all foam from the collector. Check that the foam solution tank is full. Start discharging the foam and after 30 ± 5 s to allow the discharge to stabilize, place the collecting vessel, with the discharge outlet closed, on the collector. As soon as the vessel is full, remove it from the collector, strike the foam surface level with the rim and start the clock. Weigh the vessel ($W_2$);

.2 calculate the expansion *E* from the equation:

$$E = \frac{V}{W_2 - W_1}$$

in which it is assumed that the density of the foam solution is 1.0 and where:

$V$ is the vessel volume in m*l*;

$W_1$ is the mass of the empty vessel in grams;

$W_2$ is the mass of the full vessel in grams; and

.3 open the drainage facility and collect the foam solution in the measuring cylinder to measure the 25% drainage time (see paragraph 3.8.1 hereinafter).

3.7.3 Simulated sea water may be made up by dissolving in 0.9584 kg of potable water:

| | | |
|---|---|---|
| 25.0 g | Sodium chloride | ($NaCl$); |
| 11.0 g | Magnesium chloride | ($MgCl_2$ 6 $H_2O$); |
| 1.6 g | Calcium chloride | ($CaCl_2$ 2$H_2O$); |
| 4.0 g | Sodium sulphate | ($Na_2$ $SO_4$). |

**3.8 Drainage time**

3.8.1 The drainage time should be determined according to paragraph 3.7.2.3, hereinabove, after having determined the expansion ratio.

3.8.2 The test should be carried out with simulated sea water at about 20ºC having the characteristics stated in paragraph 3.7.3 above.

**3.9 Fire tests**

Fire tests should be carried out according to the paragraphs 3.9.1 to 3.9.7.

**Note:** The fire tests of this subsection 3.9 are more expensive and time consuming than the other tests of these Guidelines. It is recommended that fire tests should be carried out at the end of the test programme, so as to avoid the expense of unnecessary testing of foam concentrates which do not comply in other respects.

3.9.1 *Environmental conditions*:

| | | |
|---|---|---|
| .1 | air temperature | 15 ± 5ºC; |
| .2 | fuel temperature | 17.5 ± 2.5ºC; |
| .3 | water temperature | 17.5 ± 2.5ºC; |
| .4 | foam solution temperature | 17.5 ± 2.5ºC; and |
| .5 | maximum wind speed 3 m/s in proximity of the fire tray. | |

**Note:** If necessary, some form of wind-screen may be used.

3.9.2 *Observations during the fire test:*

During the fire test, record the following:

.1 indoor or outdoor test;

.2 air temperature;

.3 fuel temperature;

.4 water temperature;

.5 foam solution temperature;

.6 wind speed;

.7 extinction time; and

.8 25% burnback time.

**Note:** Burnback time may either be determined visually by an experienced person or may be determined from thermal radiation measurements (a suitable method is described in standard EN 1568).

3.9.3 *Foam solution:*

.1 prepare a foam solution following the recommendations from the supplier for concentration, maximum premix time, compatibility with the test equipment, avoiding contamination by other types of foam, etc; and

.2 the test should be carried out with simulated sea water at about 20ºC having the characteristics stated in paragraph 3.7.3 above.

3.9.4 *Apparatus:*

.1 fire tray: square tray with the following dimensions:

| | |
|---|---|
| area | 4.5 $m^2$; |
| depth | 200 mm; |
| thickness of steel wall | 2.5 mm; |

with a vertical steel backboard 1 ± 0.05 m high and 1 ± 0.05 m long;

.2 foam making equipment: in accordance with paragraph 3.7.2.1 for type B foam concentrates. For type A foam concentrates, the foam application rate should be as determined by the manufacturer, up to a total of 3 nozzles in accordance with paragraph 3.7.2.1;

.3 burnback pot: circular burnback pot with the following dimensions:

| | |
|---|---|
| diameter | 300 ± 5 mm; |
| height | 150 ± 5 mm; |
| thickness of steel wall | 2.5 mm. |

3.9.5 *Fuel:*

3.9.5.1 For type B foams, use an aliphatic hydrocarbon mixture with physical properties according to the following specification:

| | |
|---|---|
| distillation range | 84ºC to 105ºC; |
| maximum difference between initial and final boiling points | 10ºC; |
| maximum aromatic content | 1%; |
| density at 15ºC | 707.5 ± 2.5 kg/m$^3$; |
| temperature | about 20ºC. |

**Note:** Typical fuels meeting this specification are n-heptane and certain solvent fractions sometimes referred to as commercial heptane.

The Administration may require additional fire tests using an additional test fuel.

3.9.5.2 For type A foams, acetone and isopropyl alcohol should be used as the standard test fuels. However, the Administration may require additional fire tests using different test fuels for water-miscible cargoes that require a higher foam application rate than acetone. Impurities for all type A fuels should not exceed 1%.

3.9.6 *Test procedure:*

.1 place the tray directly on the ground and ensure that it is level. If using heptane, add approximately 90 *l* of simulated sea water having the characteristics stated in paragraph 3.7.3, and check that the base of the tray is completely covered. Set up the foam nozzle horizontally, about 1 m above the ground in a position where the central part of the foam discharge will strike the centre axis of the backboard, 0.35 ± 0.1 m above the rim of the tray (gentle application). Add 144 ± 5 *l* of fuel, to give a nominal freeboard of 150 mm. If using acetone or isopropyl alcohol, add 234 ± 5 *l* of fuel directly into the tray, without water, to give a nominal freeboard of 150 mm;

.2 ignite the tray not more than 5 min after adding the fuel and allow it to burn for a period of 60 ± 5 s after full involvement of the surface of the fuel, then start foam application; and

.3 apply foam for 300 ± 2 s. Stop foam application and after a further 300 ± 10 s place the burnback pot, containing 2 ± 0.1 *l* of fuel in the centre of the tray and ignite. Visually estimate when 25% of the tray is covered by sustained flames or by "flare up" flames (see Note below), ignoring any faint, barely visible, or transient flames.

**Note:** During the burnback test, a "flare up" may occur, in which large flames may be sustained for periods typically from 30 s to 3 min before decreasing in intensity.

3.9.7 *Permissible limits:*

.1 extinction time: not more than 5 min; and

.2 burnback time: not less than 15 min for 25% of the surface.

**3.10 Corrosiveness**

The storage container should be compatible with its foam concentrate throughout the service life of the foam such that the chemical and physical properties of the foam should not deteriorate below the initial values accepted by the Administration.

**3.11 Volumic mass**

According to standard ASTM D 1298-85.

**3.12 Batch certificate**

The foam concentrate should be delivered with a declaration of the main characteristics (sedimentation, pH value, expansion ratio, drainage time and volumetric mass). The declaration should be issued by the maker and will be the basis for the annual condition test.

**3.13 Foam concentrate container marking**

Each foam concentrate container should be marked with complete information needed to identify the liquid and confirm its intended use. As a minimum, the following information should be included:

.1 name and address of manufacturer;

.2 product designation;

.3 type of foam (synthetic, protein-based, etc.);

.4 intended use (regular or alcohol-resistant);

.5 batch number and reference to batch certificate;

.6 date of manufacture;

.7 expiry date;

.8 reference to test standard and approvals;

.9 recommended usage concentration;

.10 indication if seawater compatible;

.11 maximum and minimum storage temperature;

.12 required onboard storage tank materials (steel, stainless steel, FRP, etc.);

.13 quantity of foam concentrate;

.14 indication of film forming capability; and

.15 safety, health and environmental information.

### 3.14 Reference test and annual periodic re-test for protein-based alcohol-resistant foam concentrates

Protein-based alcohol-resistant foam concentrates should be required to demonstrate manufacturing consistency through an annual small-scale test at a recognized test laboratory. The reference test should be performed at the same time and at the same recognized laboratory as the full-scale test defined in section 3.9.

The concentrate should be tested according to standards ISO 7203-3 Annex C, EN 1568-4 Annex I, SP Method 2580 or another standard acceptable to the Administration. The reference test and annual test should be carried out to the same standard.

The concentrate is deemed to fail the test if the results from the annual small scale test indicate significant changes in the foam quality compared to the reference test.

## 4 PERIODICAL CONTROLS OF FOAM CONCENTRATES STORED ON BOARD

The attention of the Administration is drawn to the fact that particular installation conditions (excessive ambient storage temperature, contamination of the foam concentrate, incomplete filling of the tank, etc.) may lead to an abnormal ageing of the concentrates.

For periodical control of foam concentrates, the tests under paragraphs 4.1 to 4.7 should be performed by the shipowner or operator. They should be carried out at laboratories or authorized service suppliers acceptable to the Administration.

The deviations in the values obtained by these tests, in respect of those obtained during the type approval tests, should be within the ranges acceptable to the Administration.

Tests under paragraphs 4.1, 4.3 and 4.4 should be carried out on samples maintained at 60ºC for 24 h and subsequently cooled to the test temperature.

### 4.1 Sedimentation

According to paragraph 3.3 above.

### 4.2 pH value

According to paragraph 3.5 above.

### 4.3 Expansion ratio

According to paragraph 3.7 above.

### 4.4 Drainage time

According to paragraph 3.8 above.

### 4.5 Volumic mass

According to paragraph 3.11 above.

### 4.6 Small scale fire test for protein-based alcohol-resistant foam concentrates

According to paragraph 3.14 above.

### 4.7 Chemical stability test for protein-based alcohol-resistant foam concentrates

Protein-based alcohol-resistant foam concentrates should be subjected to a stability test with acetone. A foam solution should be prepared at the approved concentration and gently applied to the surface of a tray containing acetone. The concentrate is deemed to fail the test if the foam solution mixes with the acetone.

## 5 INTERVALS OF PERIODIC CONTROLS

Except for tests in accordance with paragraph 4.7 the first periodical control of foam concentrates should be performed not more than 3 years after being supplied to the ship, and after that, every year. The tests required by paragraph 4.7 should be performed prior to delivery to the ship and annually thereafter.

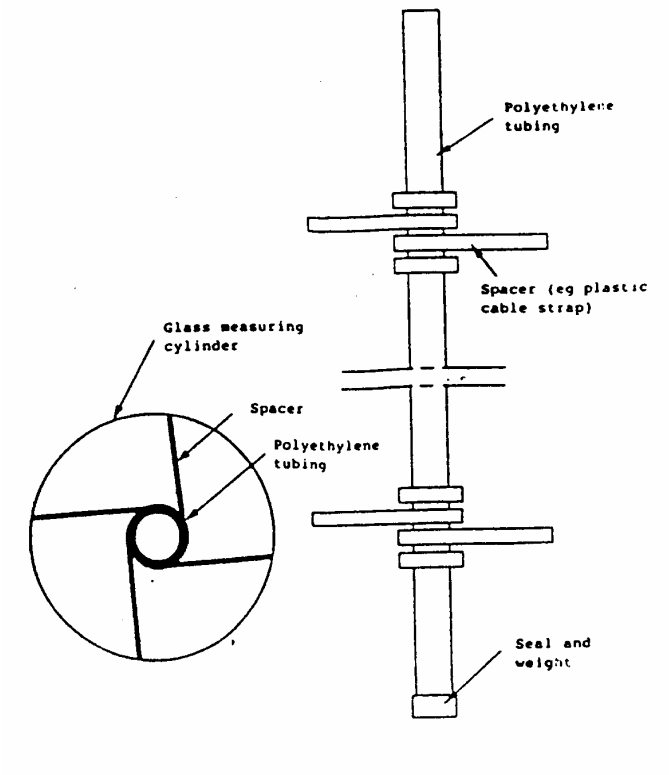


**Figure 1 – Typical form of polyethylene tube**

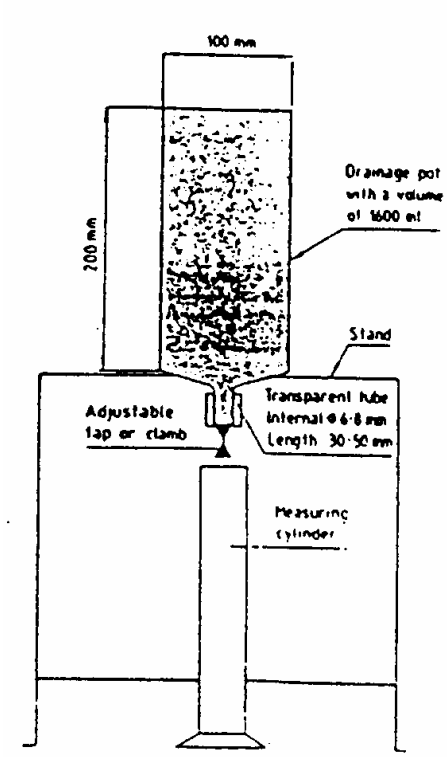


**Figure 2 – Collecting vessel for determination of expansion and drainage time**

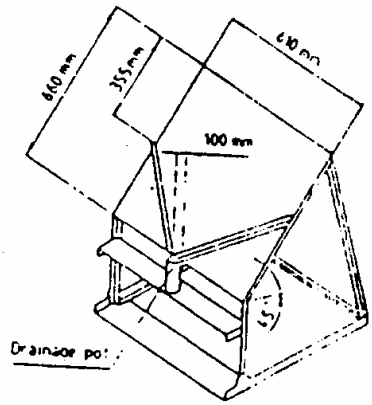


**Figure 3 – Foam collector for expansion and drainage measurement**

**Note:** Suitable materials for the collection surface are stainless steel, aluminium, brass or plastics

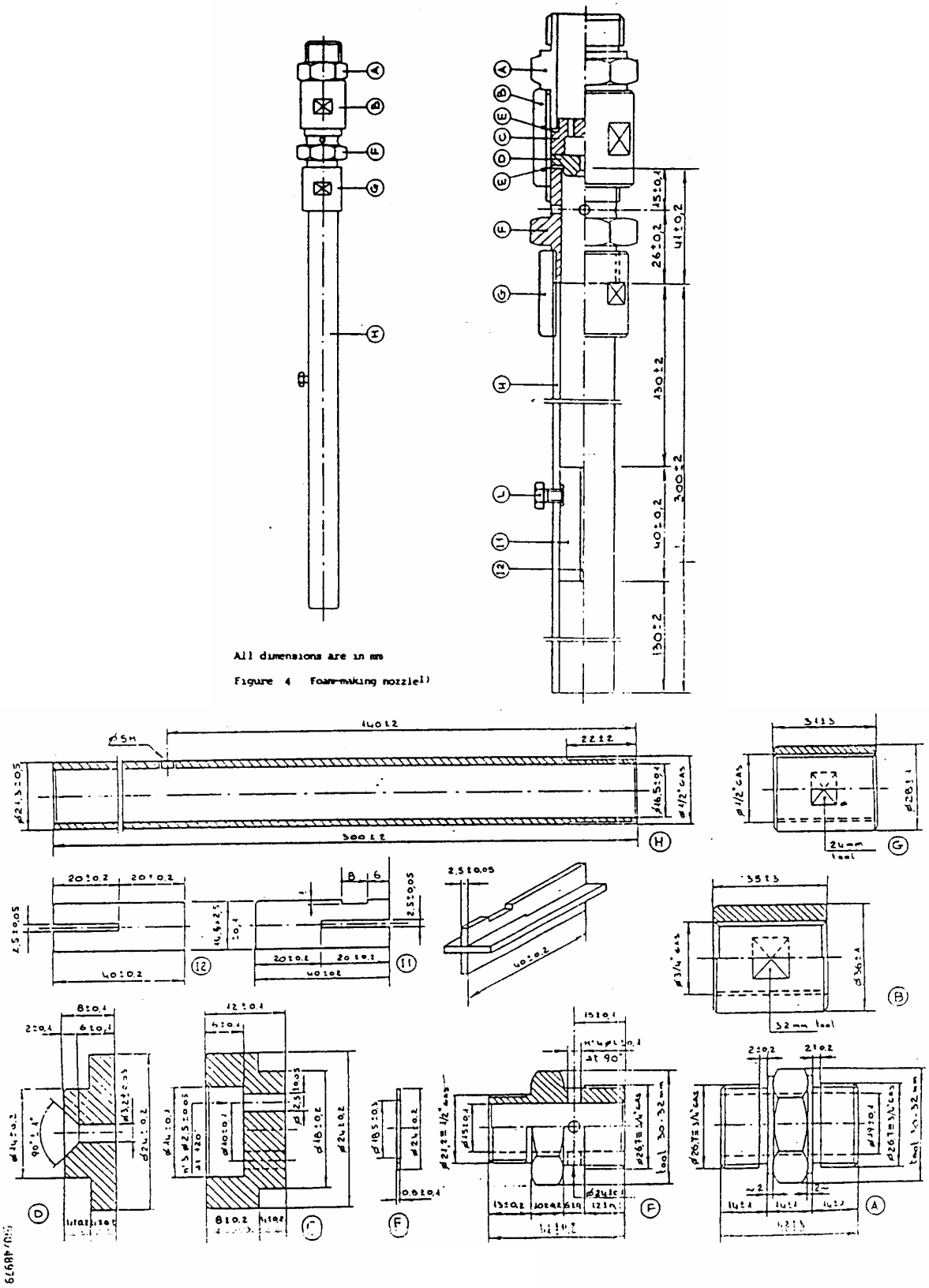


**Figure 4 – Foam making nozzle**

***

# ANNEX 2

## DRAFT AMENDMENT TO SOLAS REGULATION II-2/7.4.1

## CHAPTER II-2
## CONSTRUCTION – FIRE PROTECTION, FIRE DETECTION AND FIRE EXTINCTION

### PART C
### SUPPRESSION OF FIRE

**Regulation 7 – Detection and alarm**

1 In paragraph 4.1, the following new subparagraph .3 is added after the existing subparagraph .2.2:

> ".3 enclosed spaces containing incinerators of ships constructed on or after [date of entry into force]".

***

# ANNEX 3

## DRAFT AMENDMENT TO CHAPTER 9 OF THE FSS CODE

## FIXED FIRE DETECTION AND FIRE ALARM SYSTEMS

1 The existing chapter 9 is replaced by the following:

"**1 Application**

1.1 This chapter details the specification of fixed fire detection and fire alarm systems as required by chapter II-2 of the Convention. Unless expressly provided otherwise, the requirements of this paragraph shall apply to ships constructed on or after [*date of entry into force*].

*1.2 Definitions*

1.2.1 *Section* means a group of fire detectors and manually operated call points as reported in the indicating unit(s).

1.2.2 *Section identification capability* means a system with the capability of identifying the section in which a detector or manually operated call point has activated.

1.2.3 *Individually identifiable* means a system with the capability to identify the exact location and type of detector or manually activated call point which has activated, and which can differentiate the signal of that device from all others.

**2 Engineering specifications**

*2.1 General requirements*

2.1.1 Any required fixed fire detection and fire alarm system with manually operated call points shall be capable of immediate operation at all times (this does not require a back-up control panel). Notwithstanding this, particular spaces may be disconnected, for example, workshops during hot work and ro-ro spaces during on and off-loading. The means for disconnecting the detectors shall be designed to automatically restore the system to normal surveillance after a predetermined time that is appropriate for the operation in question. The space shall be manned or provided with a fire patrol when detectors required by regulation are disconnected. Detectors in all other spaces shall remain operational.

2.1.2 The fire detection system shall be designed to:

.1 control and monitor input signals from all connected fire and smoke detectors and manual call points;

.2 provide output signals to the navigation bridge, continuously manned central control station or onboard safety centre to notify the crew of fire and fault conditions;

.3 monitor power supplies and circuits necessary for the operation of the system for loss of power and fault conditions; and

.4 the system may be arranged with output signals to other fire safety systems including:

.1 paging systems, fire alarm or public address systems;

.2 fan stops;

.3 fire doors;

.4 fire dampers;

.5 sprinkler systems;

.6 smoke extraction systems;

.7 low-location lighting systems;

.8 fixed local application fire-extinguishing systems;

.9 CCTV systems; and

.10 other fire safety systems.

The fire detection system may be connected to a decision management system provided that:

.1 the decision management system is proven to be compatible with the fire detection system;

.2 the decision management system can be disconnected without losing any of the functions required by this chapter for the fire detection system; and

.3 any malfunction of the interfaced and connected equipment should not propagate under any circumstance to the fire detection system.

Detectors and manual call points shall be connected to dedicated sections of the fire detection system. Other fire safety functions, such as alarm signals from the sprinkler valves, may be permitted if in separate sections.

2.1.3 The system and equipment shall be suitably designed to withstand supply voltage variation and transients, ambient temperature changes, vibration, humidity, shock, impact and corrosion normally encountered in ships. All electrical and electronic equipment on the bridge or in the vicinity of the bridge shall be tested for electromagnetic compatibility, taking into account the recommendations developed by the Organization*.

* Refer to the General requirements for electromagnetic compatibility for all electrical and electronic equipment, adopted by the Organization by resolution A.813(19).

2.1.4 Fixed fire detection and fire alarm systems with individually identifiable fire detectors shall be so arranged that:

.1 means are provided to ensure that any fault (e.g., power break, short circuit, earth, etc.) occurring in the section will not prevent the continued individual identification of the remainder of the connected detectors in the section;

.2 all arrangements are made to enable the initial configuration of the system to be restored in the event of failure (e.g., electrical, electronic, informatics, etc.);

.3 the first initiated fire alarm will not prevent any other detector from initiating further fire alarms; and

.4 no section will pass through a space twice. When this is not practical (e.g., for large public spaces), the part of the section which by necessity passes through the space for a second time shall be installed at the maximum possible distance from the other parts of the section.

2.1.5 In passenger ships, the fixed fire detection and fire alarm system shall be capable of remotely and individually identifying each detector and manually operated call point. Fire detectors fitted in passenger ship cabins, when activated, shall also be capable of emitting, or cause to be emitted, an audible alarm within the space where they are located. In cargo ships and on passenger ship cabin balconies the fixed fire detection and fire alarm system shall, as a minimum, have section identification capability.

*2.2 Sources of power supply*

2.2.1 There shall be not less than two sources of power supply for the electrical equipment used in the operation of the fixed fire detection and fire alarm system, one of which shall be an emergency source of power. The supply shall be provided by separate feeders reserved solely for that purpose. Such feeders shall run to an automatic change-over switch situated in or adjacent to the control panel for the fire detection system. The main (respective emergency) feeder shall run from the main (respective emergency) switchboard to the change-over switch without passing through any other distributing switchboard.

2.2.2 There shall be sufficient power to permit the continued operation of the system with all detectors activated, but not more than 100 if the total exceeds this figure.

2.2.3 The emergency source of power specified in paragraph 2.2.1 above shall be sufficient to maintain the operation of the fire detection and fire alarm system for the periods required under SOLAS chapter II-1, regulations 42 and 43, and at the end of that period, shall be capable of operating all connected visual and audible fire alarm signals for a period of at least 30 min.

*2.3 Component requirements*

2.3.1 Detectors

2.3.1.1 Detectors shall be operated by heat, smoke or other products of combustion, flame, or any combination of these factors. Detectors operated by other factors indicative of incipient fires may be considered by the Administration provided that they are no less sensitive than such detectors.

2.3.1.2 Smoke detectors required in all stairways, corridors and escape routes within accommodation spaces shall be certified to operate before the smoke density exceeds 12.5% obscuration per metre, but not until the smoke density exceeds 2% obscuration per metre, when tested according to standards EN 54 (2001) and IEC 60092-505 (2001). Alternative testing standards may be used as determined by the Administration. Smoke detectors to be installed in other spaces shall operate within sensitivity limits to the satisfaction of the Administration having regard to the avoidance of detector insensitivity or oversensitivity.

2.3.1.3 Heat detectors shall be certified to operate before the temperature exceeds 78ºC but not until the temperature exceeds 54ºC, when the temperature is raised to those limits at a rate less than 1ºC per min, when tested according to standards EN 54 (2001) and IEC 60092-505 (2001). Alternative testing standards may be used as determined by the Administration. At higher rates of temperature rise, the heat detector shall operate within temperature limits to the satisfaction of the Administration having regard to the avoidance of detector insensitivity or oversensitivity.

2.3.1.4 The operation temperature of heat detectors in drying rooms and similar spaces of a normal high ambient temperature may be up to 130ºC, and up to 140ºC in saunas.

2.3.1.5 Flame detectors shall be tested according to standards EN 54-10 (2001) and IEC 60092-505 (2001). Alternative testing standards may be used as determined by the Administration.

2.3.1.6 All detectors shall be of a type such that they can be tested for correct operation and restored to normal surveillance without the renewal of any component.

2.3.1.7 Fixed fire detection and fire alarm systems for cabin balconies shall be approved by the Administration based on the guidelines developed by the Organization*.

2.3.1.8 Detectors fitted in hazardous areas shall be tested and approved for such service. Detectors required by regulation II-2/20.4 and installed in spaces that comply with regulation II-2/20.3.2.2 of the Convention need not be suitable for hazardous areas. Detectors fitted in spaces carrying dangerous goods, required by regulation II-2/19, table 19.3, of the Convention to comply with regulation II-2/19.3.2 of the Convention, shall be suitable for hazardous areas.

---

* Refer to the Guidelines for approval of fixed fire detection and fire alarm systems for cabin balconies (MSC.1/Circ.1242).

2.3.2 Control panel

2.3.2.1 The control panel for the fire detection system shall be tested according to standards EN 54-2 (1997), EN 54-4 (1997) and IEC 60092-504 (2001). Alternative standards may be used as determined by the Administration.

2.3.3 Cables

2.3.3.1 Cables used in the electrical circuits shall be flame retardant according to standard IEC 60332-1. On passenger ships, cables routed through other main vertical zones that they serve, and cables to control panels in an unattended fire control station shall be fire resisting according to standard IEC 60331, unless duplicated and well separated.

*2.4 Installation requirement*

2.4.1 Sections

2.4.1.1 Detectors and manually operated call points shall be grouped into sections.

2.4.1.2 A section of fire detectors which covers a control station, a service space or an accommodation space shall not include a machinery space of category A or a ro-ro space. A section of fire detectors which covers a ro-ro space shall not include a machinery space of category A. For fixed fire detection systems with remotely and individually identifiable fire detectors, a section covering fire detectors in accommodation, service spaces and control stations shall not include fire detectors in machinery spaces of category A or ro-ro spaces.

2.4.1.3 Where the fixed fire detection and fire alarm system does not include means of remotely identifying each detector individually, no section covering more than one deck within accommodation spaces, service spaces and control stations shall normally be permitted except a section which covers an enclosed stairway. In order to avoid delay in identifying the source of fire, the number of enclosed spaces included in each section shall be limited as determined by the Administration. If the detection system is fitted with remotely and individually identifiable fire detectors, the sections may cover several decks and serve any number of enclosed spaces.

2.4.1.4 In passenger ships, a section of detectors and manually operated call points shall not be situated in more than one main vertical zone, except on cabin balconies.

2.4.2 *Positioning of detectors*

2.4.2.1 Detectors shall be located for optimum performance. Positions near beams and ventilation ducts, or other positions where patterns of air flow could adversely affect performance, and positions where impact or physical damage is likely, shall be avoided. Detectors shall be located on the overhead at a minimum distance of 0.5 m away from bulkheads, except in corridors, lockers and stairways.

2.4.2.2 The maximum spacing of detectors shall be in accordance with the table below:

**Table 9.1 – Spacing of detectors**

| Type of detector | Maximum floor area per detector ($m^2$) | Maximum distance apart between centres (m) | Maximum distance away from bulkheads (m) |
|---|---|---|---|
| Heat | 37 | 9 | 4.5 |
| Smoke | 74 | 11 | 5.5 |

The Administration may require or permit other spacings based upon test data which demonstrate the characteristics of the detectors. Detectors located below moveable ro-ro decks shall be in accordance with the above.

2.4.2.3 Detectors in stairways shall be located at least at the top level of the stair and at every second level beneath.

2.4.2.4 When fire detectors are installed in freezers, drying rooms, saunas, parts of galleys used to heat food, laundries and other spaces where steam and fumes are produced, heat detectors may be used.

2.4.2.5 Where a fixed fire detection and fire alarm system is required by regulation II-2/7.5 of the Convention, spaces having little or no fire risk need not be fitted with detectors. Such spaces include void spaces with no storage of combustibles, private bathrooms, public toilets, fire-extinguishing medium storage rooms, cleaning gear lockers (in which flammable liquids are not stowed), open deck spaces and enclosed promenades having little or no fire risk and that are naturally ventilated by permanent openings.

2.4.3 Arrangement of cables

2.4.3.1 Cables which form part of the system shall be so arranged as to avoid galleys, machinery spaces of category A, and other enclosed spaces of high fire risk except where it is necessary to provide for fire detection or fire alarms in such spaces or to connect to the appropriate power supply.

2.4.3.2 A section with individually identifiable capability shall be arranged so that it cannot be damaged at more than one point by a fire.

*2.5 System control requirements*

2.5.1 Visual and audible fire signals*

2.5.1.1 The activation of any detector or manually operated call point shall initiate a visual and audible fire detection alarm signal at the control panel and indicating units. If the signals have not been acknowledged within 2 min, an audible fire alarm shall be

* Refer to the Code on Alarms and Indicators, as adopted by the Organization by resolution A.830(19).

automatically sounded throughout the crew accommodation and service spaces, control stations and machinery spaces of category A. This alarm sounder system need not be an integral part of the detection system.

2.5.1.2 In passenger ships, the control panel shall be located in the onboard safety centre. In cargo ships, the control panel shall be located on the navigation bridge or in the fire control station.

2.5.1.3 In passenger ships, an indicating unit that is capable of individually identifying each detector that has been activated or manually operated call point that has operated shall be located on the navigation bridge. In cargo ships, an indicating unit shall be located on the navigation bridge if the control panel is located in the fire control station. In cargo ships and on passenger cabin balconies, indicating units shall, as a minimum, denote the section in which a detector has activated or manually operated call point has operated.

2.5.1.4 Clear information shall be displayed on or adjacent to each indicating unit about the spaces covered and the location of the sections.

2.5.1.5 Power supplies and electric circuits necessary for the operation of the system shall be monitored for loss of power and fault conditions as appropriate including:

.1 a single open or power break fault caused by a broken wire;

.2 a single ground fault caused by the contact of a wiring conductor to a metal component; and

.3 a single wire to wire fault caused by the contact of two or more wiring conductors.

Occurrence of a fault condition shall initiate a visual and audible fault signal at the control panel which shall be distinct from a fire signal.

2.5.1.6 Means to manually acknowledge all alarm and fault signals shall be provided at the control panel. The audible alarm sounders on the control panel and indicating units may be manually silenced. The control panel shall clearly distinguish between normal, alarm, acknowledged alarm, fault and silenced conditions.

2.5.1.7 The system shall be arranged to automatically reset to the normal operating condition after alarm and fault conditions are cleared.

2.5.1.8 When the system is required to sound a local audible alarm within the cabins where the detectors are located, a means to silence the local audible alarms from the control panel shall not be permitted.

2.5.1.9 In general, audible alarm sound pressure levels at the sleeping positions in the cabins and 1 m from the source shall be at least 75 dB(A) and at least 10 dB(A) above ambient noise levels existing during normal equipment operation with the ship under way in moderate weather. The sound pressure level should be in the 1/3 octave band about the fundamental frequency. Audible alarm signals shall not exceed 120 dB(A).

2.5.2 Testing

2.5.2.1 Suitable instructions and component spares for testing and maintenance shall be provided. Detectors shall be periodically tested using equipment suitable for the types of fires to which the detector is designed to respond. Ships with self-diagnostic systems that have in place a cleaning regime for areas where heads may be prone to contamination, may carry out testing in accordance with the requirements of the Administration."

***

# ANNEX 4

## DRAFT AMENDMENT TO CHAPTER 10 OF THE FSS CODE

## SAMPLE EXTRACTION SMOKE DETECTION SYSTEMS

1 The existing text of chapter 10 is replaced by the following:

"**1 Application**

1.1 This chapter details the specification of sample extraction smoke detection systems in cargo spaces as required by chapter II-2 of the Convention. Unless expressly provided otherwise, the requirements of this paragraph shall apply to ships constructed on or after [*date of entry into force*].

**2 Engineering specifications**

***2.1 General requirements***

2.1.1 Wherever in the text of this chapter the word "system" appears, it shall mean "sample extraction smoke detection system".

2.1.1.1 A sample extraction smoke detection system consists of the following main components:

.1 smoke accumulators – air collection devices installed at the open ends of the sampling pipes in each cargo hold that perform the physical function of collecting air samples for transmission to the control panel through the sampling pipes, and may also act as discharge nozzles for the fixed-gas fire-extinguishing system, if installed;

.2 sampling pipes – a piping network that connects the smoke accumulators to the control panel, arranged in sections to allow the location of the fire to be readily identified;

.3 three-way valves – if the system is interconnected to a fixed-gas fire-extinguishing system, three-way valves are used to normally align the sampling pipes to the control panel, and if a fire is detected, the three-way valves are re-aligned to connect the sampling pipes to the fire-extinguishing system discharge manifold and isolate the control panel; and

.4 control panel – the main element of the system which provides continuous monitoring of the protected spaces for indication of smoke. It typically may include a viewing chamber or smoke sensing units. Extracted air from the protected spaces is drawn through the smoke accumulators and sampling pipes to the viewing chamber, and then to the smoke sensing chamber where the airstream is monitored by electrical smoke detectors. If smoke is sensed, the repeater panel (normally on the bridge) automatically sounds an alarm (not localized). The crew can then determine at the smoke sensing unit which cargo hold is on fire and operate the pertinent three-way valve for discharge of the extinguishing agent.

2.1.2 Any required system shall be capable of continuous operation at all times except that systems operating on a sequential scanning principle may be accepted, provided that the interval between scanning the same position twice gives a maximum allowable interval determined as follows:

The interval (I) should depend on the number of scanning points (N) and the response time of the fans (T), with a 20% allowance:

$$I = 1.2 \times T \times N$$

However, the maximum allowable interval should not exceed 120 s ($I_{max}$ = 120 s).

2.1.3 The system shall be designed, constructed and installed so as to prevent the leakage of any toxic or flammable substances or fire-extinguishing media into any accommodation and service space, control station or machinery space.

2.1.4 The system and equipment shall be suitably designed to withstand supply voltage variations and transients, ambient temperature changes, vibration, humidity, shock, impact and corrosion normally encountered in ships and to avoid the possibility of ignition of a flammable gas-air mixture.

2.1.5 The system shall be of a type that can be tested for correct operation and restored to normal surveillance without the renewal of any component.

2.1.6 An alternative power supply for the electrical equipment used in the operation of the system shall be provided.

***2.2 Component requirements***

2.2.1 The sensing unit shall be certified to operate before the smoke density within the sensing chamber exceeds 6.65% obscuration per metre.

2.2.2 Duplicate sample extraction fans shall be provided. The fans shall be of sufficient capacity to operate with the normal conditions or ventilation in the protected area and the connected pipe size shall be determined with consideration of fan suction capacity and piping arrangement to satisfy the conditions of paragraph 2.4.2.2. Sampling pipes shall be a minimum of 12 mm internal diameter. The fan suction capacity should be adequate to ensure the response of the most remote area within the required time criteria in paragraph 2.4.2.2. Means to monitor airflow shall be provided in each sampling line.

2.2.3 The control panel shall permit observation of smoke in the individual sampling pipes.

2.2.4 The sampling pipes shall be so designed as to ensure that, as far as practicable, equal quantities of airflow are extracted from each interconnected accumulator.

2.2.5 Sampling pipes shall be provided with an arrangement for periodically purging with compressed air.

2.2.6 The control panel for the smoke detection system shall be tested according to standards EN 54-2 (1997), EN 54-4 (1997) and IEC 60092-504 (2001). Alternative standards may be used as determined by the Administration.

### *2.3 Installation requirements*

2.3.1 Smoke accumulators

2.3.1.1 At least one smoke accumulator shall be located in every enclosed space for which smoke detection is required. However, where a space is designed to carry oil or refrigerated cargo alternatively with cargoes for which a smoke sampling system is required, means may be provided to isolate the smoke accumulators in such compartments for the system. Such means shall be to the satisfaction of the Administration.

2.3.1.2 Smoke accumulators shall be located on the overhead or as high as possible in the protected space, and shall be spaced so that no part of the overhead deck area is more than 12 m measured horizontally from an accumulator. Where systems are used in spaces which may be mechanically ventilated, the position of the smoke accumulators shall be considered having regard to the effects of ventilation. At least one additional smoke accumulator is to be provided in the upper part of each exhaust ventilation duct. An adequate filtering system shall be fitted at the additional accumulator to avoid dust contamination.

2.3.1.3 Smoke accumulators shall be positioned where impact or physical damage is unlikely to occur.

2.3.1.4 Sampling pipe networks shall be balanced to ensure compliance with paragraph 2.2.4 above. The number of accumulators connected to each sampling pipe shall ensure compliance with paragraph 2.4.2.2.

2.3.1.5 Smoke accumulators from more than one enclosed space shall not be connected to the same sampling pipe.

2.3.1.6 In cargo holds where non-gastight "'tween deck panels" (movable stowage platforms) are provided, smoke accumulators shall be located in both the upper and lower parts of the holds.

2.3.2 Sampling pipes

2.3.2.1 The sampling pipe arrangements shall be such that the location of the fire can be readily identified.

2.3.2.2 Sampling pipes shall be self-draining and suitably protected from impact or damage from cargo working.

### *2.4 System control requirements*

2.4.1 Visual and audible fire signals

2.4.1.1 The detection of smoke or other products of combustion shall initiate a visual and audible signal at the control panel and indicating units.

2.4.1.2 The control panel shall be located on the navigation bridge or in the fire control station. An indicating unit shall be located on the navigation bridge if the control panel is located in the fire control station.

2.4.1.3 Clear information shall be displayed on or adjacent to the control panel and indicating units designating the spaces covered.

2.4.1.4 Power supplies necessary for the operation of the system shall be monitored for loss of power. Any loss of power shall initiate a visual and audible signal at the control panel and the navigating bridge which shall be distinct from a signal indicating smoke detection.

2.4.1.5 Means to manually acknowledge all alarm and fault signals shall be provided at the control panel. The audible alarm sounders on the control panel and indicating units may be manually silenced. The control panel shall clearly distinguish between normal, alarm, acknowledged alarm, fault and silenced conditions.

2.4.1.6 The system shall be arranged to automatically reset to the normal operating condition after alarm and fault conditions are cleared.

2.4.2 Testing

2.4.2.1 Suitable instructions and component spares shall be provided for the testing and maintenance of the system.

2.4.2.2 After installation, the system shall be functionally tested using smoke generating machines or equivalent as a smoke source. An alarm shall be received at the control unit in not more than 180 s for vehicle decks, and not more than 300 s for container and general cargo holds, after smoke is introduced at the most remote accumulator.”

***

# ANNEX 5

## DRAFT MSC CIRCULAR

## GUIDANCE FOR APPLICATION OF THE REVISED CHAPTER 5 OF THE FSS CODE, AS AMENDED BY RESOLUTION MSC.206(81)

1 The Maritime Safety Committee, at its [eighty-sixth session (27 May to 5 June 2009)], having considered the proposal by the Sub-Committee on Fire Protection, at its fifty-third session, agreed that chapter 5 of the FSS Code, as amended by resolution MSC.206(81), should apply only to ships constructed on or after 1 July 2010 but not to ships constructed before 1 July 2010, taking into account SOLAS article VIII(e) and the following proposed amendment to paragraph 1.2 of chapter 1 of the FSS Code approved at this session, with a view to subsequent adoption:

"**1 Application**

The following new sentence is added to the end of paragraph 1.2:

"However, amendments to the Code adopted after 1 July 2002 shall apply only to ships the keels of which are laid or which are at a similar stage of construction, on or after the date on which the amendments enter into force, unless expressly provided otherwise."

2 Considering that the aforementioned proposal in paragraph 1 would be of benefit to the industry and other interested parties, taking into account SOLAS article VIII(e) and the above proposed amendment, the Committee agreed to the proposal and invited Contracting Governments to the 1974 SOLAS Convention to:

.1 apply the revised chapter 5 of the FSS Code, as amended by resolution MSC.206(81), only to ships constructed on or after 1 July 2010 flying their flags; and

.2 accept ships flying the flags of other Contracting Governments to the 1974 SOLAS Convention, constructed and equipped in accordance with the relevant requirements of the 1974 SOLAS Convention and chapter 5 of the FSS Code, as amended by resolution MSC.206(81).

3 Member Governments are invited to bring the above information to the attention of all parties concerned.

***

# ANNEX 6

## DRAFT AMENDMENT TO CHAPTER 1 OF THE FSS CODE

## GENERAL

### 1 Application

1 The following new sentence is added to the end of paragraph 1.2:

"However, amendments to the Code adopted after 1 July 2002 shall apply only to ships the keels of which are laid or which are at a similar stage of construction, on or after the date on which the amendments enter into force, unless expressly provided otherwise."

***

# ANNEX 7

## DRAFT MSC CIRCULAR

## APPLICATION OF SOLAS REGULATION II-2/10 AND CHAPTER 12 OF THE FSS CODE RELATED TO EMERGENCY FIRE PUMP CAPACITY

1 The Committee, at its [eighty-sixth session (27 May to 5 June 2009)], having considered the proposal by the Sub-Committee on Fire Protection, at its fifty-third session, with regard to the application of SOLAS regulation II-2/10 and chapter 12 of the FSS Code related to emergency fire pump capacity, agreed to the following interpretation:

"**Interpretation of chapter 12 of the FSS Code**

The emergency fire pump shall as a minimum comply with paragraph 2.2.1.1. Where a fixed water-based fire-extinguishing system installed for the protection of the machinery space in accordance with SOLAS regulation II-2/10.4.1.1 is supplied by the emergency fire pump, then the emergency fire pump capacity should be adequate to supply the fixed fire-extinguishing system at the required pressure plus two jets of water. The capacity of the two jets shall in any case be calculated at not less than 25 $m^3$/h.

The minimum pressure referred to in paragraph 2.2.1.2 shall be understood to mean 0.27 $N/mm^2$."

2 Member Governments are invited to use the above interpretations when applying SOLAS regulation II-2/10 and chapter 12 of the FSS Code related to emergency fire pump capacity, and bring them to the attention of ship designers, shipowners, equipment manufacturers, test laboratories and other parties concerned.

***

# ANNEX 8

## DRAFT MSC RESOLUTION

## AMENDMENTS TO THE REVISED GUIDELINES FOR APPROVAL OF SPRINKLER SYSTEMS EQUIVALENT TO THAT REFERRED TO IN SOLAS REGULATION II-2/12 (RESOLUTION A.800(19))

THE MARITIME SAFETY COMMITTEE,

RECALLING Article 28(b) of the Convention on the International Maritime Organization concerning the functions of the Committee,

NOTING the significance of the performance and reliability of the sprinkler systems approved under provisions of regulation II-2/12 of the International Convention for the Safety of Life at Sea (SOLAS), 1974,

DESIROUS of clarifying the application of the amended Revised Guidelines for approval of sprinkler systems equivalent to that referred to in SOLAS regulation II-2/12 (resolution A.800(19)), adopted by resolution MSC.265(84),

HAVING CONSIDERED, at its [eighty-sixth] session, the text of the proposed amendments to the Revised Guidelines for approval of sprinkler systems equivalent to that referred to in SOLAS regulation II-2/12 (resolution A.800(19)),

1. ADOPTS the amendments to the Revised Guidelines for approval of sprinkler systems equivalent to that referred to in SOLAS regulation II-2/12 (resolution A.800(19)), the text of which is set out in the Annex to the present resolution;

2. INVITES Governments to apply the amendments when approving equivalent sprinkler systems according to paragraph 1-1 (Application) of the Annex.

ANNEX

**AMENDMENTS TO THE REVISED GUIDELINES FOR APPROVAL OF SPRINKLER SYSTEMS EQUIVALENT TO THAT REFERRED TO IN SOLAS REGULATION II-2/12* (RESOLUTION A.800(19))**

1 The existing section 1-1 is replaced by the following:

"**1-1 APPLICATION**

1-1.1 The present Guidelines apply to equivalent sprinkler systems, referred to in SOLAS regulation II-2/10.6 and chapter 8 of the FSS Code, tested on or after 9 May 2008. Equivalent sprinkler systems undergoing testing and approval in accordance with resolution A.800(19), may be approved by the Administration until 1 July 2009.

1-1.2 All type approvals issued to confirm compliance of equivalent sprinkler systems with the Revised Guidelines, adopted by resolution A.800(19), remain valid and may be renewed to remain valid until 1 July 2015.

1-1.3 Existing equivalent sprinkler systems, approved and installed based on resolution A.800(19), should be permitted to remain in service as long as they are serviceable."

***

* Refer to SOLAS chapter II-2 in force before 1 January 2002. The equivalent regulation in the amended chapter II-2 is regulation II-2/10.6.4, and chapter 8 of the FSS Code.

# ANNEX 9

## DRAFT MSC CIRCULAR

## GUIDELINES FOR THE APPROVAL OF FIXED DRY CHEMICAL POWDER FIRE-EXTINGUISHING SYSTEMS FOR THE PROTECTION OF SHIPS CARRYING LIQUEFIED GASES IN BULK

1 The Committee, at its [eighty-sixth session (27 May to 5 June 2009)], having considered the proposal by the Sub-Committee on Fire Protection, at its fifty-third session, approved Guidelines for the approval of fixed dry chemical powder fire-extinguishing systems for the protection of ships carrying liquefied gases in bulk, as set out in the annex.

2 Member Governments are invited to apply the annexed Guidelines when approving fixed dry chemical powder fire-extinguishing systems for the protection of ships carrying liquefied gases in bulk, and bring them to the attention of ship designers, shipowners, equipment manufacturers, test laboratories and other parties concerned.

ANNEX

# GUIDELINES FOR THE APPROVAL OF FIXED DRY CHEMICAL POWDER FIRE-EXTINGUISHING SYSTEMS FOR THE PROTECTION OF SHIPS CARRYING LIQUEFIED GASES IN BULK

## 1 Application

These Guidelines apply to fixed dry chemical powder fire-extinguishing systems for the protection of on-deck cargo areas of ships carrying liquefied gases in bulk in accordance with SOLAS regulation II-2/1.6.2 and chapter 11 of the International Code for the Construction and Equipment of Ships Carrying Liquefied Gases in Bulk (IGC Code).

## 2 Definitions

*Caking* is a chemical reaction between dry chemical powder and moisture that causes individual particles of the medium to bind together to form an aggregate mass.

*Dry chemical powder* is an extinguishing medium consisting of very fine particles of sodium or potassium bicarbonate treated or supplemented with additional materials to prevent packing and caking (moisture absorption) and to ensure consistent flow characteristics.

*Dry chemical powder unit* is a complete system including dry chemical storage container(s), pressurizing gas storage container(s), controls, piping and hand hose lines.

*Gas point* is a defined point in the discharge of a dry chemical powder unit when the discharge of dry chemical powder ends, and is marked by a change in the nozzle stream to the discharge of primarily pressurizing gas.

*Hand hose line* is a hand-held dry chemical powder nozzle covering cargo areas not covered by a monitor.

*Monitor* is a fixed dry chemical powder nozzle protecting cargo loading and discharge manifold areas.

*Packing* is a phenomenon that occurs when dry chemical powder stored in a container is subjected to vibration causing the smaller particles to move to the bottom of the container and the larger particles to travel to the top.

*Pressurizing medium* is the gas used to expel the dry chemical from the system, usually dry nitrogen.

## 3 Principal requirements for the system

3.1 The system should be capable of manual release. A manual release station should be located adjacent to each hand hose line storage area and each monitor. A back-up release station should be provided at the fixed dry chemical powder unit. The operation of any manual release station should initiate the pressurization of the fixed dry chemical powder unit and begin the discharge of dry chemical powder to all connected hand hose lines and monitors.

3.2 The system and its components should be designed to withstand ambient temperature changes, vibration, humidity, shock, impact and corrosion normally encountered on the open deck of ships, and manufactured and tested to the satisfaction of the Administration in accordance with the criteria given in appendix A.

3.3 Systems should be designed for the discharge characteristics and flow rates of a specific dry chemical medium. The type of dry chemical in the system should not be changed unless testing to verify performance is conducted by a laboratory to the satisfaction of the Administration. Different dry chemical media should not be mixed.

3.4 Only chemicals based on the salts of potassium should be used. Dry chemical storage containers should be designed to pressure codes of practice acceptable to the Administration, for the maximum system pressure developed at 55ºC.

3.5 A means for pressurizing the system using an inert gas, which is normally dry nitrogen, in high pressure cylinders should be provided. The nitrogen should be industrial grade with a dewpoint of -50ºC or lower. Pressure gauges should be provided for monitoring the contents of the cylinders. A pressure regulator should be installed to reduce the gas pressure to the required system operating pressure.

3.6 The quantity of expellant gas should be adequate for the system to discharge the entire charge of dry chemical powder within the time period specified in paragraph 4.1 below. If multiple gas cylinders are provided, they should be arranged with normally closed cylinder valves that are automatically opened by a pilot system when a release station is actuated. Each cylinder should have, in addition, the capability of manual operation.

3.7 System piping should be arranged to ensure that the required flow rates are achieved at each hand hose line and monitor. Flow through the piping should be based on flow calculation methods determined by the test laboratory for the specific dry chemical powder medium and equipment used.

3.8 Hand hose line nozzles, monitors and hose couplings should be constructed of brass or stainless steel. Piping, fittings and related components, except gaskets, should be designed to withstand 925ºC.

3.9 Dry chemical storage container pick-up tubes and related internal structures should be shown to be resistant to corrosive effects of the dry chemical medium.

3.10 Dry chemical storage containers should have a fill opening of at least 100 mm to allow onboard recharging, and suitable connections to allow the dry powder charge to be fully agitated with nitrogen, in accordance with the system manufacturer's maintenance instructions.

3.11 Operating instructions for the system should be placed at each operating station.

3.12 Recharging instructions should be provided on a permanent nameplate affixed to the fixed dry chemical powder unit. As a minimum, the instructions should indicate the required type of dry chemical powder, the manufacturer of the powder and the required charge. The required pressurizing medium pressure, number of cylinders and regulator valve setting should also be provided.

3.13 An approved design, installation, operation and maintenance manual should be provided to the shipowner for each type of fixed dry chemical powder unit.

## 4 Onboard testing

4.1 After installation, the pipes, valves fittings and assembled systems should be tested to the satisfaction of the Administration, including functional testing of the remote and local release stations. All distribution piping should be blown through with air to ensure that the piping is free of obstructions.

APPENDIX A

## APPROVAL TESTS

Except for paragraph 5, a fully charged fixed dry chemical powder unit conditioned at 21 ± 3ºC for at least 24 h should be used.

### 1 Discharge duration test

A fixed dry chemical powder unit should have a discharge duration of at least 45 s with all attached hand hose lines and monitors operating. The hand hose lines should be fully deployed for this test. To conduct the test, the hose lines and monitors should be held in a horizontal position and their discharge valves fully opened. The duration of discharge should be measured from the time dry chemical powder begins flowing from all attached devices until the gas point is reached at the first nozzle.

### 2 Maximum length of piping and fittings test

The discharge duration test should be conducted with the maximum length of discharge piping, elbows, tees and other fittings to be used on board, as recommended by the manufacturer. One nozzle should be located at the maximum height for which approval is requested.

### 3 Discharge range test

Dry chemical powder monitors should have a minimum discharge range as follows:

| Monitor flow rate | Minimum range |
|---|---|
| 10 kg/s | 10 m |
| 25 kg/s | 30 m |
| 45 kg/s | 40 m |

For monitors with a discharge rate between the above listed values, the minimum range should be determined by interpolation. The test should be conducted with the monitor positioned horizontally, 1 m above the floor. The monitor should be capable of achieving the minimum range for at least 40 s of the 45 s discharge.

### 4 Flow rate test

The minimum flow rate of each type of hand hose line nozzle should be at least 3.5 kg/s and each type monitor should be at least 10 kg/s. The minimum flow rate should be determined based on the average of three discharge tests. The tests should be conducted with the nozzle/monitor discharged for at least 30 s. The fixed dry chemical powder unit should be placed on a load cell or weighed before and after testing to determine the quantity of medium discharged during the test.

## 5 Minimum temperature test

A fully charged fixed dry chemical powder unit conditioned at the minimum expected storage temperature for at least 24 h should be capable of discharging at least 85% of the dry chemical medium with all attached hand hose lines and monitors operating. The minimum expected storage temperature should be determined by the Administration.

## 6 Hand hose line hydrostatic test

A full length representative sample of a hand hose line should be subjected to a hydrostatic pressure equal to two times the operating pressure that would be developed in the line by a fully charged unit with the nozzle discharge valve closed. The hose should be capable of withstanding this test pressure for a period of one minute without rupturing.

## 7 Salt spray test

Representative samples of valves, pressure regulators, gauges, releasing controls and related components that will be installed at locations exposed to the weather should be subjected to a salt spray within a fog chamber. Prior to exposure any components with inlet or outlet orifices should be sealed.

The salt solution should be a 20% by mass sodium chloride solution in distilled water. The pH should be between 6.5 and 7.2 and the density between 1.126 g/m*l* and 1.157 g/m*l* when atomized at 35ºC. Suitable means of controlling the atmosphere in the chamber should be provided. The specimens should be supported in their normal operating position and exposed to the salt spray (fog) in a chamber having a volume of at least 0.43 $m^3$ in which the exposure zone shall be maintained at a temperature of 35 ± 2ºC. The temperature should be recorded at least once per day, at least 7 h apart (except weekends and holidays when the chamber normally would not be opened). Salt solution should be supplied from a recirculating reservoir through air-aspirating nozzles, at a pressure between 0.7 bar (0.07 MPa) and 1.7 bar (0.17 MPa). Salt solution run-off from exposed samples should be collected and should not return to the reservoir for recirculation. The samples should be shielded from condensate dripping.

Fog should be collected from at least two points in the exposure zone to determine the rate of application and salt concentration. The fog should be such that for each 80 $cm^2$ of collection area, 1 m*l* to 2 m*l* of solution should be collected per hour over a 16 h period and the salt concentration should be 20 ± 1% by mass.

The samples should withstand exposure to the salt spray for a period of 30 days. After this period, the samples should be removed from the fog chamber and allowed to dry for 4 to 7 days at a temperature of 20 to 25°C in an atmosphere having a relative humidity not greater than 70%.

Following the drying period, the samples should be examined for evidence of failure. Any operating components should be functionally tested to verify continued operability. Gauges should remain watertight for at least 2 h when immersed in 0.3 m of water.

## 8 Dry chemical powder tests

### *8.1 Fluidity*

The dry chemical powder should be tested to ensure that it remains free flowing throughout the temperature range requested by the applicant. Elevated temperature tests and hygroscopicity tests should be performed to the satisfaction of the Administration.

### *8.2 Fire-extinguishing capability*

The dry chemical powder should be demonstrated capable of extinguishing fires in liquefied gas cargoes. Representative equipment should be subjected to full-scale fire tests to the satisfaction of the Administration.

***

# ANNEX 10

## DRAFT MSC CIRCULAR

## GUIDELINES ON DETERMINING THE NO OBSERVED ADVERSE EFFECT LEVEL (NOAEL) AND LOWEST OBSERVED ADVERSE EFFECT LEVEL (LOAEL) VALUES FOR HALOCARBON FIRE-EXTINGUISHING AGENTS

1 The Committee, at its [eighty-sixth session (27 May to 5 June 2009)], having considered the proposal by the Sub-Committee on Fire Protection, at its fifty-third session, recognized the need for guidelines on the method to determine the NOAEL and LOAEL values referred to in the Revised Guidelines for the approval of equivalent fixed gas fire-extinguishing systems, as referred to in SOLAS 74, for machinery spaces and cargo pump-rooms (MSC/Circ.848) and the Amendments to the Revised Guidelines (MSC.1/Circ.1267), and approved Guidelines on determining the no observed adverse effect level (NOAEL) and lowest observed adverse effect level (LOAEL) values for halocarbon fire-extinguishing agents, as set out in the annex.

2 Member Governments are invited to apply the annexed Guidelines when approving fixed gas fire-extinguishing systems in accordance with MSC/Circ.848 and MSC.1/Circ.1267 on or after [date of approval] and bring them to the attention of ship designers, shipowners, equipment manufacturers, test laboratories and other parties concerned.

ANNEX

# GUIDELINES ON DETERMINING THE NO OBSERVED ADVERSE EFFECT LEVEL (NOAEL) AND LOWEST OBSERVED ADVERSE EFFECT LEVEL (LOAEL) VALUES FOR HALOCARBON FIRE-EXTINGUISHING AGENTS

## 1 General

MSC/Circ.848 and MSC.1/Circ.1267 permit halocarbon agents to be used in concentrations up to the No Observed Adverse Effect Level (NOAEL) calculated on the net volume of the protected space at the maximum expected ambient temperature without additional safety measures. In no case should halocarbon agents be used at concentrations above the Lowest Observed Adverse Effect Level (LOAEL). These Guidelines prescribe the recommended protocol for determining the referred-to NOAEL and LOAEL levels.

## 2 Definitions

2.1 *Adverse physiological or toxicological effects* are considered to be evidence of cardiac sensitization, for the purposes of approving halocarbon fire extinguishing agents in accordance with MSC/Circ.848 and MSC.1/Circ.1267.

2.2 *Halocarbon agent* is a fire extinguishing medium consisting of one or more carbon atoms linked to one or more Halogen atoms from the elements bromine, chlorine, fluorine and iodine.

2.3 *NOAEL* is the highest concentration at which no adverse physiological or toxicological effect has been observed.

2.4 *LOAEL* is the lowest concentration at which an adverse physiological or toxicological effect has been observed.

## 3 National Fire Protection Association values

3.1 The NOAEL and LOAEL values for halocarbon agents listed in the National Fire Protection Association Standard (NFPA) 2001 are acceptable as meeting these Guidelines without further testing. For halocarbon agents not listed in NFPA 2001, cardiac sensitization testing in accordance with section 4, below should be performed to determine the NOAEL and LOAEL values.

## 4 Cardiac sensitization

4.1 The NOAEL and LOAEL values are based on the toxicological effect known as cardiac sensitization. Cardiac sensitization occurs when a chemical causes an increased sensitivity of the heart to adrenaline, a naturally occurring substance, which may result in the sudden onset of irregular heart beats and possibly heart attack.

4.2 The test protocol should measure the cardiac sensitization in a stepwise manner using sufficiently small changes in concentration, such that the interval between the LOAEL and NOAEL can be accurately determined.

4.3 The test animals, beagle dogs being preferable, should be exposed to a predetermined concentration of the halocarbon agent for a 5-min period. At the end of the 5-min exposure, an external dose of adrenaline (epinephrine) should be administered. If the dog experiences cardiac sensitization, an effect should be recorded.

4.4 The following standard protocols for cardiac sensitization may be used for reference:

.1 Hardy, C.J., I.J. Sharman and G.C. Clark. 1991. Assessment of Cardiac Sensitisation Potential in Dogs. Rep. No. CTL/C/ 2521. Huntingdon Research Centre, Huntingdon, Cambridgeshire, United Kingdom.

.2 Reinhardt, C.F., L.S. Mullen and M.E. Maxfield. 1973. Epinephrine induced cardiac arrhythmia potential of some common industrial solvents. J. Occup. Med. 15:953-955.

.3 WIL Research Laboratory Reports. Project Nos. WIL12248, 12265, 12318. WIL Research Laboratories, Inc. 1992.

***

# ANNEX 11

## DRAFT MSC CIRCULAR

## APPLICATION FOR EXISTING APPROVALS ACCORDING TO THE REVISED GUIDELINES FOR THE APPROVAL OF EQUIVALENT FIXED GAS FIRE-EXTINGUISHING SYSTEMS, AS REFERRED TO IN SOLAS 74, FOR MACHINERY SPACES AND CARGO PUMP-ROOMS (MSC/CIRC.848)

1 The Committee, at its [eighty-sixth session (27 May to 5 June 2009)], having considered the proposal by the Sub-Committee on Fire Protection, at its fifty-third session, with regard to the application for existing approvals according to the Revised Guidelines for approval of equivalent fixed gas fire-extinguishing systems, as referred to in SOLAS 74, for machinery spaces and cargo pump-rooms (MSC/Circ.848), in relation to the Amendments to the Revised Guidelines (MSC.1/Circ.1267), agreed to the following interpretation:

> "Type approvals conducted in accordance with the Revised Guidelines for approval of equivalent fixed gas fire-extinguishing systems, as referred to in SOLAS 74, for machinery spaces and cargo pump-rooms (MSC/Circ.848) should remain valid until 1 July 2012."

2 Member Governments are invited to apply the above interpretation when approving equivalent fixed gas fire-extinguishing systems, as referred to in SOLAS 74, for machinery spaces and cargo pump-rooms, and bring it to the attention of ship designers, shipowners, equipment manufacturers, test laboratories and other parties concerned.

***

# ANNEX 12

## DRAFT MSC CIRCULAR

## GUIDELINES FOR THE MAINTENANCE AND INSPECTIONS OF FIXED CARBON DIOXIDE FIRE-EXTINGUISHING SYSTEMS

1 The Committee, at its [eighty-sixth session (27 May to 5 June 2009)], having considered the proposal by the Sub-Committee on Fire Protection, at its fifty-third session, approved Guidelines for the maintenance and inspections of fixed carbon dioxide fire-extinguishing systems, as set out in the annex.

2 Member Governments are invited to apply the annexed Guidelines when inspecting fixed carbon dioxide fire-extinguishing systems on board all ships and bring them to the attention of ship designers, shipowners, equipment manufacturers, and other parties concerned.

ANNEX

# GUIDELINES FOR THE MAINTENANCE AND INSPECTIONS OF FIXED CARBON DIOXIDE FIRE-EXTINGUISHING SYSTEMS

## 1 General

These Guidelines provide the minimum recommended level of maintenance and inspections for fixed carbon dioxide fire-extinguishing systems on all ships, and are intended to demonstrate that the system is kept in good working order as specified in SOLAS regulation II-2/14.2.1.2. These Guidelines are intended to supplement the fire-extinguishing system manufacturer's approved maintenance instructions. Certain maintenance procedures and inspections may be performed by competent crewmembers, while others should be performed by persons specially trained in the maintenance of such systems. The onboard maintenance plan should indicate which parts of the recommended inspections and maintenance are to be completed by trained personnel.

## 2 Safety

Whenever carbon dioxide fire-extinguishing systems are subjected to inspection or maintenance, strict safety precautions should be followed to prevent the possibility that individuals performing or witnessing the activities are placed at risk. Prior to performing any work, a safety plan should be developed to account for all personnel and establish an effective communications system between the inspection personnel and the on-duty crew. Measures to avoid accidental discharges such as locking or removing the operating arms from directional valves, or shutting and locking the system block valve should be taken as the initial procedure for the protection of personnel performing any maintenance or inspections. All personnel should be notified of the impending activities before work is begun.

## 3 Maintenance and inspection plan

Fixed carbon dioxide fire-extinguishing systems should be kept in good working order and readily available for immediate use. Maintenance and inspections should be carried out in accordance with the ship's maintenance plan having due regard to ensuring the reliability of the system. The onboard maintenance plan should be included in the ship's safety management system and should be based on the system manufacturer's recommendations including:

.1 maintenance and inspection procedures and instructions;

.2 required schedules for periodic maintenance and inspections;

.3 listing of recommended spare parts; and

.4 records of inspections and maintenance, including corrective actions taken to maintain the system in operable condition.

## 4 Monthly inspections

4.1 At least every 30 days a general visual inspection should be made of the overall system condition for obvious signs of damage, and should include verification that:

.1 all stop valves are in the closed position;

.2 all releasing controls are in the proper position and readily accessible for immediate use;

.3 all discharge piping and pneumatic tubing is intact and has not been damaged;

.4 all high pressure cylinders are in place and properly secured; and

.5 the alarm devices are in place and do not appear damaged.

4.2 In addition, on low pressure systems the inspections should verify that:

.1 the pressure gauge is reading in the normal range;

.2 the liquid level indicator is reading within the proper level;

.3 the manually operated storage tank main service valve is secured in the open position; and

.4 the vapour supply line valve is secured in the open position.

## 5 Annual inspections

The following minimum level of maintenance and inspections should be carried out in accordance with the system manufacturer's instructions and safety precautions:

.1 the boundaries of the protected space should be visually inspected to confirm that no modifications have been made to the enclosure that have created uncloseable openings that would render the system ineffective;

.2 all storage containers should be visually inspected for any signs of damage, rust or loose mounting hardware. Cylinders that are leaking, corroded, dented or bulging should be hydrostatically retested or replaced;

.3 system piping should be visually inspected to check for damage, loose supports and corrosion. Nozzles should be inspected to ensure they have not been obstructed by the storage of spare parts or a new installation of structure or machinery;

.4 the manifold should be inspected to verify that all flexible discharge hoses and fittings are properly tightened; and

.5 all entrance doors to the protected space should close properly and should have warning signs, which indicate that the space is protected by a fixed carbon dioxide system and that personnel should evacuate immediately if the alarms sound. All remote releasing controls should be checked for clear operating instructions and indication as to the space served.

## 6 Minimum Recommended Maintenance

6.1 At least biennially (intervals of 2 years ± 3 months) in passenger ships or at each intermediate and periodical survey* in cargo ships, the following maintenance should be carried out (to assist in carrying out the recommended maintenance, examples of service charts are attached at annex):

.1 all high pressure cylinders and pilot cylinders should be weighed or have their contents verified by other reliable means to confirm that the available charge in each is above 90% of the nominal charge. Cylinders containing less than 90% of the nominal charge should be refilled. The liquid level of low pressure storage tanks should be checked to verify that the required amount of carbon dioxide to protect the largest hazard is available;

.2 the hydrostatic test date of all storage containers should be checked. High pressure cylinders should be subjected to periodical tests at intervals not exceeding 10 years. At the 10-year inspection, at least 10% of the total number provided should be subjected to an internal inspection and hydrostatic test**. If one or more cylinders fail, a total of 50% of the onboard cylinders should be tested. If further cylinders fail, all cylinders should be tested. Flexible hoses should be replaced at the intervals recommended by the manufacturer and not exceeding every 10 years; and

.3 the discharge piping and nozzles should be tested to verify that they are not blocked. The test should be performed by isolating the discharge piping from the system and flowing dry air or nitrogen from test cylinders or suitable means through the piping.

6.2 At least biennially (intervals of 2 years ± 3 months) in passenger ships or at each renewal survey* in cargo ships, the following maintenance should be carried out by service technicians/specialists trained to standards accepted by the Administration:

.1 where possible all activating heads should be removed from the cylinder valves and tested for correct functioning, by applying full working pressure through the pilot lines.

In cases where this is not possible, pilot lines should be disconnected from the cylinder valves and blanked off or connected together and tested with full working pressure from the release station and checked for leakage.

In both cases this should be carried out from one or more release stations when installed.

---

* Refer to Revised survey guidelines under the Harmonized System of Survey and Certification (resolution A.948(23)).

** Refer to standard ISO 6406 – Periodic inspection and testing of seamless steel gas cylinders (ISO – 6406).

If manual pull cables operate the remote release controls, they should be checked to verify the cables and corner pulleys are in good condition and freely move and do not require an excessive amount of travel to activate the system;

.2 all cable components should be cleaned and adjusted as necessary, and the cable connectors should be properly tightened. If the remote release controls are operated by pneumatic pressure, the tubing should be checked for leakage, and the proper charge of the remote releasing station pilot gas cylinders should be verified. All controls and warning devices should function normally, and the time delay, if fitted should prevent the discharge of gas for the required time period; and

.3 after completion of the work, the system should be returned to service. All releasing controls should be verified in the proper position and connected to the correct control valves. All pressure switch interlocks should be reset and returned to service. All stop valves should be in the closed position.

APPENDIX

## EXAMPLE SERVICE CHARTS

HIGH PRESSURE $CO_2$ SYSTEM

| Date: | Name of ship/unit: | IMO No.: | |
|---|---|---|---|

**Technical Description**

| No. | Text | Value |
|---|---|---|
| 1 | Manufacturer | |
| 2 | Number of main cylinders | |
| 3 | Main cylinders capacity (each) | |
| 4 | Number of pilot cylinders | |
| 5 | Pilot cylinder capacity (each) | |
| 6 | Number of distribution lines | |
| 7 | Oldest cylinder pressure test date | |
| 8 | Protected space(s) | |
| 9 | Date flexible hoses fitted/renewed | |

**Description of Inspection/Tests**

| No. | Description | Carried out | Not carried out | Not applicable | Comment |
|---|---|---|---|---|---|
| 1 | Release controls and distribution valves secured to prevent accidental discharge | | | | |
| 2 | Contents in main cylinders checked by weighing | | | | |
| 3 | Contents in main cylinders checked by liquid level indicator | | | | |
| 4 | Contents of pilot cylinders checked | | | | |
| 5 | All cylinder valves visually inspected | | | | |
| 6 | All cylinder clamps and connections checked for tightness | | | | |
| 7 | Manifold visually inspected | | | | |
| 8 | Manifold tested for leakage, by applying dry working air | | | | |
| 9 | Main valve and distribution valves visually inspected | | | | |
| 10 | Main valve and distribution valves tested for operation | | | | |
| 11 | Time delay devices tested for correct setting* | | | | |
| 12 | Remote release system visually inspected | | | | |
| 13 | Remote release system tested | | | | |
| 14 | Servo tubing/pilot lines pressure tested at maximum working pressure and checked for leakages and blockage | | | | |
| 15 | Manual pull cables, pulleys, gang releases tested, serviced and tightened/adjusted as necessary | | | | |
| 16 | Release stations visually inspected | | | | |
| 17 | Warning alarms (audible/visual) tested | | | | |
| 18 | Fan stop tested* | | | | |
| 19 | 10% of cylinders and pilot cylinder/s pressure tested every 10 years | | | | |
| 20 | Distribution lines and nozzles blown through, by applying dry working air | | | | |
| 21 | All doors, hinges and locks inspected* | | | | |
| 22 | All instruction and warning signs on installation inspected | | | | |
| 23 | All flexible hoses renewed and check valves in manifold visually inspected every 10 years | | | | |
| 24 | Release controls and distribution valves reconnected and system put back in service | | | | |
| 25 | Inspection date tags attached | | | | |

* If fitted as part of the $CO_2$ system.

LOW PRESSURE $CO_2$ SYSTEM

| Date: | Name of ship/unit: | IMO No.: | |
|---|---|---|---|

**Technical Description**

| No. | Text | Value |
|---|---|---|
| 1 | Manufacturer | |
| 2 | No. of tanks | |
| 3 | Tanks capacity (tons) | |
| 4 | Number of pilot cylinders | |
| 5 | Pilot cylinder capacity (each) | |
| 6 | Number of distribution lines | |
| 7 | Protected space(s) | |

**Description of Inspection/Tests**

| No. | Description | Carried out | Not carried out | Not applicable | Comment |
|---|---|---|---|---|---|
| 1 | Tank main service valve closed and secured to prevent accidental discharge | | | | |
| 2 | Distribution valves verified closed | | | | |
| 3 | Check correct function of level indicator | | | | |
| 4 | Contents of $CO_2$ tank checked by tank level indicator | | | | |
| 5 | Contents of $CO_2$ tank checked by riser tube reading | | | | |
| 6 | Contents of $CO_2$ tank checked by level control valve | | | | |
| 7 | Supports of tank inspected | | | | |
| 8 | Insulation on tank inspected | | | | |
| 9 | Safety valves of tank inspected | | | | |
| 10 | Safety valves of tank tested | | | | |
| 11 | Contents of pilot cylinders checked | | | | |
| 12 | Start/stop function of cooling compressors tested | | | | |
| 13 | All connected electrical alarms and indicators tested | | | | |
| 14 | Main manifold valve inspected | | | | |
| 15 | Main manifold valve tested | | | | |
| 16 | Distribution valves inspected | | | | |
| 17 | Distribution valves tested | | | | |
| 18 | Release stations inspected | | | | |
| 19 | Total flooding release mechanism inspected | | | | |
| 20 | Total flooding release mechanism tested | | | | |
| 21 | Time delay devices tested for correct setting* | | | | |
| 22 | Warning alarms tested | | | | |
| 23 | Fan stop tested* | | | | |
| 24 | Distribution lines and nozzles inspected | | | | |
| 25 | Distribution lines and nozzles tested | | | | |
| 26 | Distribution lines and nozzles blown through | | | | |
| 27 | All doors, hinges and locks inspected* | | | | |
| 28 | All instruction plates inspected | | | | |
| 29 | Tank main service valve reopened and secured open | | | | |
| 30 | System put back in service | | | | |
| 31 | Inspection date tags attached | | | | |

* If fitted as part of the $CO_2$ system.

***

# ANNEX 13

## DRAFT MSC CIRCULAR

## RECOMMENDATION FOR THE EVALUATION OF FIRE PERFORMANCE AND APPROVAL OF LARGE FIRE DOORS

1 The Maritime Safety Committee, at its [eighty-sixth session (27 May to 5 June 2009)], having considered the proposal by the Sub-Committee on Fire Protection, at its fifty-third session, approved the Recommendation for the evaluation of fire performance and approval of large fire doors, as set out in the annex.

2 Member Governments are invited to apply the annexed Guidelines when approving large fire doors and to bring them to the attention of all parties concerned.

ANNEX

# RECOMMENDATION FOR THE EVALUATION OF FIRE PERFORMANCE AND APPROVAL OF LARGE FIRE DOORS

## 1 Methods of evaluation and testing

1.1 For doors larger than those which can be accommodated in the standard specimen size (e.g., 2,440 mm wide and 2,500 mm high), as specified in part 3 of the FTP Code:

.1 if such doors can be accommodated into a larger test furnace, it is recommended to conduct a test with the full size specimen of the door; or

.2 it is recommended to use the following method for evaluation of the fire performance of the door and approval of the door.

## 2 Doors of marginally larger dimensions

2.1 A fire door of marginally larger dimensions than a fire-tested fire door may be individually assessed and accepted for a specific project with the same classification, provided all of the following is met:

.1 dimensions (width, height) are not more than 15% above those of the tested door;

.2 the surface area of the door is not more than 10% above that of the tested door;

.3 the door design does not deviate in any other aspect from the one tested; and

.4 the tested door has successfully satisfied both insulation and integrity criteria for the following times, as appropriate:

| | | |
|---|---|---|
| “B-0” | 0 min insulation | 36 min integrity |
| “B-15” | 18 min insulation | 36 min integrity |
| “A-0” | 0 min insulation | 68 min integrity |
| “A-15” | 18 min insulation | 68 min integrity |
| “A-30” | 36 min insulation | 68 min integrity |
| “A-60” | 68 min insulation | 68 min integrity. |

2.2 If the door to be approved is larger than stated above and complies with the size requirements stated under section 3 below, the test should also include additional instrumentation as specified in paragraph 3.4.2 below, or equivalent arrangement.

## 3 Doors larger than those in section 1 above, but not exceeding 50% in surface area

3.1 An engineering assessment can be used to extrapolate the fire test results of a door having a larger geometry than the tested door.

3.2 Such an assessment should be used for verification only if the dimensions of the actual door are greater than the maximum permitted by the furnace (considering a furnace with an aperture of 2,440 mm width x 2,500 mm height) and the door involved has already been tested, with such dimensions, with satisfactory results in accordance with section 1 above, and the actual door does not exceed 50% in surface area.

3.3 The methodology used to extrapolate the fire tests results should consider the following three steps:

.1 standard fire test of the "specimen" to obtain reference temperature and structural displacements. Such a "specimen" may be either:

.1.1 a door already certified through the fire test which is identical in design to the door to be analysed (fire test to include additional instrumentation as per paragraph 3.4.2, or equivalent arrangement); or

.1.2 a specially-built specimen where the finite element method is to be performed to extrapolate the results of a specimen of an actual door having a size exceeding the maximum size allowed by the furnace of the testing laboratory; the specimen should be a mock-up of the actual door, but having a size that fits in the furnace;

.2 finite element analysis in subsection 3.6, of the "specimen" to calibrate the thermal and mechanical boundary conditions of the FEM model, which are adjusted until the numerical and experimental temperature and displacement distribution compare satisfactorily; and

.3 finite element analysis in subsection 3.5, of the actual door carried out using the model calibrated as per paragraph 3.7, assuming that the differences in the geometry and dimensions between the actual door and the specimen door do not significantly influence the results.

**3.4** ***Data to be submitted***

3.4.1 In order for the analysis to be carried out, the following information should be submitted:

.1 detailed drawings of the door, the door frame and the closure and locking devices including the indications of clearances and interferences;

.2 test report of the prototype used to extrapolate the results;

In this respect, additional instrumentation should consist of two sets of three 1.6 mm diameter thermocouples fitted through the thickness of the leaf, at depths of 1/3 t, 1/2 t, 2/3 t. Such sets should be fitted, on the upper part of the door, within a circle of 100 mm in diameter whose centre is 150 mm aside of the surface thermocouples fitted in the centre of the top quarters;

.3 mechanical characteristics of all materials used for the construction of the door and its insulation:

.3.1 Young's module;

.3.2 yield strength; and

.3.3 density; and

.4 thermal properties:

.4.1 thermal expansion coefficient;

.4.2 thermal conductivity; and

.4.3 specific heat.

3.4.2 Since all these properties are temperature dependent, it is necessary that the required data be given as a function of the temperature range foreseen for the fire tests. Where it is not possible to obtain experimental data, an engineering evaluation should be submitted with the supporting considerations for the proposed curves of variation of mechanical and thermal characteristics as a function of the temperature in the considered range.

**3.5** ***Method of analysis***

The comparison of the fire resistance of doors having larger geometry should be considered in two steps:

.1 evaluation of the heat transmission through the specimen thickness and of the temperature on the unexposed specimen surface; and

.2 evaluation of the strength characteristics and of the displacements of the structural members of the specimen.

**3.6** ***Heat transmission analysis***

3.6.1 By carrying out finite element calculations, the histories over time of the heat transmission within the structural assembly are computed and the temperature is compared with the temperature experienced by the assembly represented in the standard fire test.

3.6.2 Based on suitable data for the temperature-dependent variables, an iterative procedure is used for the evaluation of thermal-mechanic properties.

3.6.3 The thermal boundary conditions of convecting and radiative type are:

$$q_c = h_c (T_s - T_\infty)$$

and

$$q_r = \sigma\varepsilon(T_s^4 - T_\infty^4)$$

where:

| | | |
|---|---|---|
| $q_c$ and $q_r$ | : | Convective and radiative heat flux, respectively |
| $h_c$ | : | Convective heat transfer coefficient |
| $\sigma$ | : | Stefan-Boltzmann constant |
| $\varepsilon$ | : | Emissivity coefficient |
| $T_s$ | : | Surface temperature |
| $T_\infty$ | : | Furnace or ambient temperature. |

3.6.4 The two equations can be included in an equivalent boundary condition:

$$q = H_{eq} (\sigma, \varepsilon, T_s, T_\infty) (T_s - T_\infty)$$

where:

the equivalent coefficient $H_{eq}$ depends on the unknown surface temperature. However, it can be calculated as part of the finite element analysis using an emissivity coefficient appropriately calibrated with the fire test results.

3.6.5 The equivalent heat transfer coefficient can be assumed to be constant on the single exposed surface, as the furnace assembly built in accordance with the FTP Code gives uniformity of the temperature and heat flux within the furnace.

3.6.6 Alternatively, the temperature distribution measured on the specimen of the standard fire test can be directly applied on the finite element structural model taking into account the same time histories.

### 3.7 *Structural analysis*

3.7.1 Using the results of the heat transmission analysis and information on temperature-dependent material properties, the thermal stresses and deformations on the geometry are evaluated. When modelling the structural assembly, attention is to be paid to using a sufficient number of elements to account for the non-uniform temperature distribution within the member and to catch the non-linear temperature-dependent behaviour.

3.7.2 Once the model is prepared, the analysis should be carried out stepwise. For each element, the incremental strain or deformation caused by a temperature increase is calculated and a new stress level is obtained based on the stress-strain relationship applicable for that particular temperature increase.

3.7.3 The mechanical boundary conditions have to be congruent in order to represent the real interaction of the door with the external frame for the overall length of the test.

## 4 Larger doors exceeding 50% in surface area

4.1 For larger doors exceeding 50% in surface area, a full analysis based on SOLAS regulation II-2/17 should be performed to assess the safety of the vessel.

4.2 The approach should be based on the results of the fire test of the door having the maximum dimensions permitted by the furnace (considering a furnace with an aperture of 2,440 mm width x 2,500 mm height) according to the procedure described under section 3.

***

# ANNEX 16

## DRAFT MSC CIRCULAR

## GUIDELINES FOR THE DRAINAGE OF FIRE-FIGHTING WATER FROM CLOSED VEHICLE AND RO-RO SPACES AND SPECIAL CATEGORY SPACES OF PASSENGER AND CARGO SHIPS

1 The Committee, at its [eighty-sixth session (27 May to 5 June 2009)], having considered the proposal by the Sub-Committee on Fire Protection, at its the fifty-third session, with regard to the amendments to SOLAS regulation II-2/20 adopted by resolution MSC.256(84), approved Guidelines for the drainage of fire-fighting water from closed vehicle and ro-ro spaces and special category spaces of passenger and cargo ships, as set out in the annex.

2 Member Governments are invited to apply the annexed Guidelines when approving the drainage systems of fire-fighting water from closed vehicle and ro-ro spaces and special category spaces of passenger and cargo ships, in accordance with paragraphs 6.1.4 and 6.1.5 of SOLAS regulation II-2/20 (resolution MSC.256(84)), and bring them to the attention of ship designers, shipowners, equipment manufacturers, test laboratories and other parties concerned.

ANNEX

# GUIDELINES FOR THE DRAINAGE OF FIRE-FIGHTING WATER FROM CLOSED VEHICLE AND RO-RO SPACES AND SPECIAL CATEGORY SPACES OF PASSENGER AND CARGO SHIPS

## 1 GENERAL

### 1.1 Purpose

1.1.1 When fixed water-based fire-extinguishing systems are provided for the protection of closed vehicle and ro-ro spaces and special category spaces, adequate drainage facilities, as required by SOLAS regulation II-2/20.6.1.4, should be provided to prevent the accumulation of significant quantities of water on decks and the build-up of free surfaces. In addition, SOLAS regulation II-2/20.6.1.5 requires effective measures to be taken to ensure that floating debris does not cause blockage of the drains.

1.1.2 When the direct overboard discharge provisions or the bilge system required by SOLAS regulation II-1/35-1 have a capacity sufficient for the additional flow from the fixed fire-extinguishing system and the required number of fire hoses, as determined by these Guidelines, additional drainage facilities are not required.

1.1.3 Scuppers, freeing ports, discharges and bilge systems should be installed in accordance with SOLAS regulation II-1/35-1, the relevant regulations of the International Convention on Load Lines, 1966 (ICLL 66), and these Guidelines.

1.1.4 *In lieu* of the above, the Administration, after having given consideration to the ship's arrangement and equipment, may accept other fixed installations if they afford equivalent protection. Any equivalent protection should demonstrate the capability to rapidly drain fire-fighting water from the affected decks and prevent the build-up of free surfaces under expected conditions of trim and list, for as long as the fire-extinguishing system is in operation.

### 1.2 Application

These Guidelines apply to the design of drainage systems in closed vehicle and ro-ro spaces and special category spaces required by SOLAS regulation II-2/20.6.1.4, and to the protection of drain openings required by SOLAS regulation II-2/20.6.1.5.

## 2 DEFINITIONS

2.1 *Bilge wells* are recessed areas where water accumulates before entering the bilges.

2.2 *Bulkhead deck* in a passenger ship means the uppermost deck at any point in the subdivision length ($L_s$) to which the main bulkheads and the ship's shell are carried watertight and the lowermost deck from which passenger and crew evacuation will not be impeded by water in any stage of flooding for damage cases defined in regulation 8 and in part B-2 of SOLAS chapter II-1. The bulkhead deck may be a stepped deck. In a cargo ship the freeboard deck may be taken as the bulkhead deck.

2.3 *Drains*, as used in these Guidelines, refer to either scupper wells and scuppers, freeing ports, or bilge wells and drain pipes.

2.4 *Freeing ports* are openings in the bulwarks on the open deck to allow water to drain directly overboard.

2.5 *Scuppers* are a system of gravity deck drains and connected piping leading from scupper wells to the sideshell of the ship or to the bilge system.

2.6 *Scupper wells* are recessed areas in the deck where water accumulates before entering the scuppers.

## 3 DRAINAGE ARRANGEMENTS FOR PASSENGER SHIPS

### 3.1 Arrangements above the bulkhead deck

3.1.1 Above the bulkhead deck, except as provided in paragraph 1.1.2 above, an adequate number of properly-sized drains should be provided on each deck to ensure that the combined water flow from the fixed fire-extinguishing system and the required number of fire hoses can be rapidly discharged overboard or drain to a bilge system with a reservoir tank fitted with a high water level alarm.

3.1.2 At least four drains should be located on each side of the protected space, uniformly distributed fore and aft. Freeing ports should not be installed in enclosed superstructures, as defined by regulation 3.10 of the ICLL 66.

3.1.3 The drainage system on each side of the deck should have an aggregate capacity of not less than 125% of the maximum flow rate of the fixed fire-extinguishing system water pumps plus the flow from two fire hoses (four if required by SOLAS regulation II-2/19.3.1.2). In case an automatic deep well or submersible pumping system is installed, the bilge pump capacity can be subtracted from the required drainage capacity.

3.1.4 ***Minimum capacity of drains***

The minimum capacity of scuppers, freeing ports or a combination thereof should be determined in accordance with the provisions of paragraphs 3.1.4.1 or 3.1.4.2, respectively.

3.1.4.1 The minimum required area of scuppers and connected piping should be determined by the following formula:

$$A = \frac{1.25Q}{\sqrt{19.62(h - \sum h_l)}}$$

where:

$A$ is the total required sectional area of the drains on each side of the deck in $m^2$;

$Q$ is the combined waterflow from the fixed fire-extinguishing system and the required number of fire hoses in $m^3/s$;

$h$ is the elevation head difference between the bottom of the scupper well or suction level and the overboard discharge opening or highest approved load line in m; and

$\sum h_l$ is the summation of head losses corresponding to scupper piping, fittings and valves in m.

In no case should the area of each individual drain be less than 0.0078 $m^2$ or 125 mm diameter piping.

3.1.4.2 The minimum required area of freeing ports should be determined by the following formula:

$$A = \frac{Q}{0.763\sqrt{19.62(h_1 - h_2)}}$$

where:

$A$ is the total required sectional area of freeing ports on each side of the ship in $m^2$;

$Q$ is the combined waterflow from the fixed fire-extinguishing system and the required number of fire hoses in $m^3/s$; and

$h_1$-$h_2$ is the depth of water on the deck determined in accordance with paragraph 4.2.

If the cross-sectional area of freeing ports required by the ICLL 66 is equal to or greater than determined above, additional freeing ports are not required.

**3.2 Arrangements below the bulkhead deck**

3.2.1 Below the bulkhead deck, except as provided in paragraph 1.1.2 above, an efficient bilge pumping system should be provided to ensure that the combined waterflow from the fixed fire-extinguishing system and the required number of fire hoses can be rapidly collected and led to suitable arrangements for discharge overboard. The bilge system capacity should be not less than that required by paragraph 3.2.3.

3.2.2 The bilge piping system should be arranged in accordance with SOLAS chapter II-1. At least four bilge wells should be located on each side of the protected space, uniformly distributed fore and aft.

3.2.3 The bilge pumping system on each side of the ship should have an aggregate capacity of not less than 125% of the maximum flow rate of the fixed fire-extinguishing system water pumps plus the flow from two fire hoses (four if required by SOLAS regulation II-2/19.3.1.2).

3.2.4 The required area of the main and branch bilge pipes for the protected space should be adequate to ensure a maximum waterflow of 2 m/s in each section of piping in accordance with paragraphs 3.2.4.1 to 3.2.4.3.

3.2.4.1 If the drainage system is a bilge pumping system, the following three criteria should be satisfied:

$$\sum Q_{bpump} \geq 1{,}25Q$$

$$A_M \geq 0{,}625Q \ \&$$

$$\sum A_B \geq 0{,}625Q$$

where:

$Q_{bpump}$ is the combined capacity of all power bilge pumps except the emergency bilge pump in $m^3/s$;

$Q$ is the combined waterflow from the fixed fire-extinguishing system and the required number of fire hoses in $m^3/s$;

$A_M$ is the sectional area of the main bilge pipe of the protected space in $m^2$; and

$\sum A_B$ is the total sectional area of branched bilge pipes for each side in $m^2$.

3.2.4.2 If the drainage system is based on gravity drains leading to a reservoir tank, the minimum required area of drains and connected piping should be determined by paragraph 3.1.4.

3.2.4.3 If the drainage system is a combined system, the relevant dimensioning for each part of the system should be determined using paragraphs 3.2.4.1 and 3.2.4.2.

3.2.5 The required capacity of each bilge well should be at least 0.15 $m^3$.

3.2.6 If the system includes a reservoir tank, the tank should have adequate capacity for at least 20 min of operation at the required drainage capacity for the affected space.

## 4 DRAINAGE ARRANGEMENTS FOR CARGO SHIPS

4.1 In cargo ships, the drainage and pumping arrangements should be such as to prevent the build-up of free surfaces in accordance with subsection 3.1 or 3.2, as appropriate.

4.2 If the abovementioned pumping arrangement is not possible, the adverse affect upon stability of the added weight and free surface of water should be taken into account according to the International Code on Intact Stability, 2008, chapter 3.

For that purpose, the depth of water ($h_1 - h_2$) on each deck should be calculated by multiplying the maximum flow rate of the installed fire-extinguishing system water pumps plus the flow from two fire hoses (four if required by SOLAS regulation II-2/19.3.1.2) by an operating time of 30 min. This volume of water should be divided by the area of the affected deck.

## 5 PROTECTION OF DRAIN OPENINGS

5.1 An easily removable grating, screen or other means should be installed over each drain opening in the protected spaces to prevent debris from blocking the drain. The total open area ratio of the grating to the attached drain pipe should be at least 6 to 1. The grating should be raised above the deck or installed at an angle to prevent large objects from blocking the drain. No dimension of the individual openings in the grating should be more than 25 mm.

5.2 No grating or screen is required when a fixed mechanical system is provided to unblock the drainage system, or when other than a gravity drain system is provided with its own filter.

5.3 A clearly visible sign or marking should be provided not less than 1,500 mm above each drain opening stating, "Drain opening – do not cover or obstruct". The marking should be in letters at least 50 mm in height.

## 6 TESTING

The drainage facilities on ro-ro passenger ships should be functionally tested before the ship enters service to verify that the capacity of the system is adequate. The drainage facilities on all ships should be periodically visually examined for blockage or other damage and should be flushed with fire hoses or similar means to verify that the system is functional, if obstructions are noted.

***

# ANNEX 17

## DRAFT MSC CIRCULAR

## GUIDELINES FOR MEASURES TO PREVENT FIRES IN ENGINE-ROOMS AND CARGO PUMP-ROOMS

1 The Maritime Safety Committee, at its seventy-ninth session (1 to 10 December 2004), recognized the need for the development of practical guidelines for measures to prevent fires in engine-rooms and cargo pump-rooms, taking into account relevant IMO instruments and present engineering and shipbuilding technology.

2 The Committee, at its [eighty-sixth session (27 May to 5 June 2009)], having considered a proposal by the Sub-Committee on Fire Protection, at its fifty-third session, approved the Guidelines for measures to prevent fires in engine-rooms and cargo pump-rooms, as set out in the annex.

3 Member Governments are invited to bring the annexed Guidelines to the attention of ship designers, owners, operators, shipbuilders and other parties concerned.

ANNEX

# GUIDELINES FOR MEASURES TO PREVENT FIRE IN ENGINE-ROOMS AND CARGO PUMP-ROOMS

## CONTENTS

**PART I GENERAL**

1 Purpose
2 Application
3 Definitions

**PART II INSTALLATION PRACTICE**

**Chapter 1 General**

1 General requirements

**Chapter 2 Piping system**

1 Design and construction
2 Flexible pipes, hoses and hose assemblies
3 Bellows expansion joints
4 Filters and strainers
5 Insulation materials
6 Pressure, temperature, oil level gauges and sight glasses
7 Pipe fittings

**PART III ENGINE-ROOMS**

**Chapter 1 Control of flammable oils**

1 Arrangement and installation of pressurized oil fuel systems
2 Spray shields for joints of pressurized flammable oil piping systems
3 Jacketed high pressure fuel lines of internal combustion engines

**Chapter 2 Control of ignition source**

1 Insulation of hot surfaces and high temperature surfaces
2 Protection of electrical equipment
3 Identification and protection of potential ignition sources

**Chapter 3 Control of ventilation**

1 Design of ventilation systems

**Chapter 4 Useful arrangement, installation and apparatus for fire safety**

1 Measures for the prevention of spillage of flammable oils
2 Fuel oil isolation valves for multi-engines

**Chapter 5 Equipment installation**

1 Boilers
2 Thermal oil installations
3 Purifier rooms
4 Oil heaters
5 Hydraulic power packs

**PART IV CARGO PUMP-ROOMS**

**Chapter 1 Control of flammable materials**

1 General
2 Equipment and fittings on cargo piping systems

**Chapter 2 Control of ignition source**

1 General
2 Lighting system and protection of electrical equipment
3 Protection of penetration to other spaces
4 Temperature monitoring system for pumps in cargo pump-rooms

**Chapter 3 Control of ventilation**

1 Design criteria of ventilation systems
2 Gas detection systems

## PART I GENERAL

### 1 Purpose

1.1 These Guidelines are a consolidation of the measures to prevent fire in engine-rooms, cargo pump-rooms and other fire-prone spaces based on present engineering and shipbuilding technology, including resolutions, circulars and other documents developed by IMO.

1.2 The purpose of these Guidelines is to provide uniform and harmonized guidance in a single document to shipowners, ship designers, shipmasters, inspectors and surveyors. Also this minimizes the deviation of interpretation or application standards among inspectors, surveyors and Member States.

1.3 Attention is drawn to the importance of the design, construction, testing, installation, inspection and maintenance of systems containing flammable oils in order to reduce the risk of fire.

1.4 The Guidelines have been developed without prejudice to the requirements of existing SOLAS regulations, MSC circulars and other IMO safety instruments.

### 2 Application

2.1 These Guidelines are intended for application of fire safety engineering design to provide technical justification and installation guidance on measures to prevent fire in engine-rooms, cargo pump-rooms and other fire-prone spaces.

2.2 These Guidelines do not cover fire hazards related to the arrangements for gas fuels which must satisfy the relevant Codes and regulations developed by IMO.

### 3 Definitions

3.1 *Flashpoint* is the temperature in degrees Celsius (closed cup test) at which a product will give off enough flammable vapour to be ignited, as determined by an approved flashpoint apparatus.

3.2 *Auto-ignition point* is the temperature at which a substance will spontaneously combine with oxygen and burn without an external ignition or heat source.

3.3 *High temperature surfaces* are surfaces with temperatures above 220°C.

3.4 *Hot surfaces* are surfaces with a temperature of less than 220°C including steam systems with a pressure of less than 2.3 $N/mm^2$, thermal oil systems, exhaust gas piping and oil-fired and exhaust gas boilers.

3.5 *Heated surfaces* are the surfaces with a high temperature source on the other side.

3.6 *Potential ignition sources* are sources having enough energy to cause ignition. These include high temperature surfaces, sparks or flames from inefficient flanges or joints, electrical discharges caused from electrostatic atmospheres, or electrical contactor faults. Sources of these are for example exhaust gas piping of internal combustion engines, leakages from boiler furnace joints and electrical equipment within oil treatment rooms.

3.7 *Flammable oils*, for the purpose of these Guidelines, are those used in machinery spaces such as those listed in Table 1.

3.8 *Flammable oil system* is the system used for the supply of flammable liquid to engines or equipment.

3.9 *Lower flammable limit (LFL)* is the concentration of a hydrocarbon gas in air below which there is insufficient hydrocarbon to support and propagate combustion.

# PART II INSTALLATION PRACTICE

## CHAPTER 1 GENERAL

### 1 General requirements

1.1 *Fire triangle*

The interaction of the three equal sides of the fire triangle: HEAT, FUEL AND OXYGEN, are required for the creation and maintenance of fire. When there is not enough heat generated to sustain the process, when the fuel is exhausted, removed or isolated, or when oxygen supply is limited, then a side of the triangle is broken and the fire is suppressed.

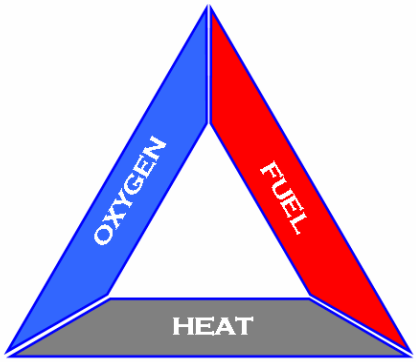


**Figure II-1 – Fire Triangle**

For flammable liquids, the idea of the fire triangle is generally embodied in fire prevention by excluding the flammable mixture of oil (LFL) and (or) hot spots (Auto Ignition Point). Given 21% $O_2$ concentration in the atmosphere, for a flammable oil, the flammable mixture (LFL) can exist at the temperature of its flashpoint (FP) and above.

1.2 *SOLAS requirements to break the fire triangle chain*

1.2.1 Fuel control

Many kinds of flammable oils are used in ships.

When flammable oils are leaked or splashed in engine-room spaces or where potential ignition sources exist, they may cause a fire depending on the situation. To prevent leaks, splashes or spray from flammable oil service or transfer piping systems, the following measures need to be considered as described in SOLAS:

.1 spray shields for flanged/screwed joints of pipes containing flammable oils (fuel oil, lubricating oil and hydraulic oil);

.2 jacketed piping system for high pressure fuel pipes;

.3 flammable oil piping location;

.4 tank sounding pipes, air vents and level measuring devices location; and

.5 flammable gas measurement systems.

1.2.2 Heat control

Many hot surfaces and potential ignition sources exist in engine-rooms, cargo pump-rooms and other fire-prone spaces. To assist in preventing a fire originating as a result of flammable oil coming in direct contact with high temperature surfaces, these surfaces should be properly insulated.

Therefore, the SOLAS regulations require:

.1 insulation of high temperature surfaces;

.2 temperature sensing devices for cargo pumps, ballast pumps and stripping pumps installed in cargo pump-rooms and driven by shafts passing through the pump-room bulkhead;

.3 the surface of any insulation used in spaces where penetration of oil is possible (e.g., machinery spaces) to be impervious to oil or oil vapours. This applies equally in cases where the insulation is applied to meet shipyard practice or at the owner's request, for example to reduce heat loss or to protect the crew; and

.4 spray protection of some electrical equipment.

1.2.3 Oxygen control

It is not possible to exclude air from engine-rooms or pump-rooms except when actively suppressing a fire, so control of oxygen supply is not a practical means of preventing fire in these spaces. However, cargo tanks or slop tanks which are part of a cargo area could be inerted using an inert gas system.

To decrease the flammable vapours within cargo pump-rooms SOLAS requires such spaces to be mechanically ventilated. The number of air changes shall be at least 20 per hour, based upon the gross volume of the space. The ventilation shall be of the suction type using fans of the non-sparking type.

1.3 *Specification of flammable oils*

Flammable oils have different flashpoints and auto-ignition points. The actual ignition condition may differ from the flashpoint and auto-ignition point. Table 1 shows the typical flashpoint and auto-ignition point of various flammable oils used on board ship.

**Table 1 – Typical flashpoint and auto-ignition point**

| | | Flashpoint (°C) | Auto-ignition point (°C) |
|---|---|---|---|
| Heavy oil fuel | | 65~80 | min. 400 |
| Intermediate oil fuel 380 | | 60~75 | min. 250 |
| Intermediate oil fuel 180 | | 60~75 | min. 250 |
| Medium oil fuel | | 60~75 | min. 250 |
| Marine diesel oil | | 60~75 | min. 250 |
| Marine gas oil | | 60~75 | min. 250 |
| Lubricating oil | Cylinder oil | 210~240 | min. 320 |
| | System oil | 250~255 | min. 320 |
| Hydraulic oil | | 180 | min. 320 |
| Thermal oil | | 210 | min. 320 |

1.3.1 Flashpoint of oil fuel

.1 Oil fuels with a flashpoint of less than 60°C (closed cup test) are not permitted, except for the following:

– ships certified for restricted service within areas having a climate ensuring that ambient temperatures of spaces where such oil fuel is stored will not rise to within 10°C below its flashpoint, but not less than 43°C;

– installations complying with IACS UR M24 regarding use of crude oil as fuel; and

– in emergency generators oil fuel with a flashpoint of not less than 43°C may be used.

.2 Oil fuel in storage tanks should not be heated to temperatures within 10°C below the flashpoint of the oil fuel, except for the following:

– Oil fuel in service tanks, settling tanks and any other tanks in the supply system may be heated above this limit, provided:

  – The length of the vent pipes from such tanks is sufficient for cooling the vapours to at least 10°C below the flashpoint of the oil fuel;

  – A temperature sensor is fitted in the vent pipe and adjusted to give an alarm if the temperature should exceed a limit set at 10°C below the flashpoint of the oil fuel;

  – The vent pipes are fitted with flame screens meeting the requirements of IMO's "Standards for Devices for Preventing Passage of Flames into Cargo Tanks";

  – There are no openings from the vapour space of the oil fuel tanks into machinery spaces, (bolted manholes are acceptable);

– Enclosed spaces should not be located directly over such oil fuel tanks, except for well ventilated cofferdams; and

– Electrical equipment should not be fitted in the vapour space of the oil fuel tanks, unless it is certified to be intrinsically safe.

## CHAPTER 2 PIPING SYSTEM

### 1 Design and construction

1.1 *General*

For the application of these Guidelines, flammable oil systems are classified as follows:

.1 High pressure oil system:

– a piping system which services or transfers flammable oils having pressures of 10.0 N/mm$^2$ or above;

.2 Low pressure oil system:

– a piping system which services or transfers flammable oils having pressures between 0.18 N/mm$^2$ and 10.0 N/mm$^2$.

1.2 *Pressurized oil fuel system*

If oil fuel lines fail, spray patterns may occur. These spray patterns depend on the pressure of the system and the failure condition. Major factors of flammability are air/fuel mixture ratio, temperature of fuel and droplet size. Droplet diameter is one of the factors and is dependent on fluid pressure and size of failure. As a general rule, the smaller the droplet size the greater the fire risk when the fuel system is under high pressure and a small orifice exists, as this results in the atomization of the fuel oil. Therefore, a small crack in a high-pressure oil fuel pipe may lead to a most dangerous situation.

### 2 Flexible pipes, hoses and hose assemblies

2.1 *Application*

Flexible pipes, hoses and hose assemblies – which are flexible hoses with end fittings attached – should be in as short lengths as practicable, but should not, in general, exceed 1.5 m in length, and only be used where necessary to accommodate relative movement between fixed piping and machinery parts.

2.2 *Design and construction*

Hoses should be constructed to a recognized standard and be approved as suitable for the intended service, taking into account fire resistance, pressure, temperature, fluid compatibility and mechanical loading including impulse where applicable. Each type of hose assembly should be provided with a certificate of hydrostatic pressure testing and conformity of production.

2.3 *Installation*

Hoses should be installed in accordance with the manufacturers' instructions, having regard to: minimum bend radius, twist angle and orientation, and support where necessary. In locations where hoses could possibly suffer external damage, adequate protection should be provided. After installation, the system should be operated at maximum pressure and checked for possible malfunctions and leakages.

2.4 *Installation guidelines*

Flexible hoses should:

.1 avoid sharp bends;

.2 have end fittings torqued in accordance with manufacturer's specifications;

.3 consider fluid flow; and

.4 consider movement of attached bodies.

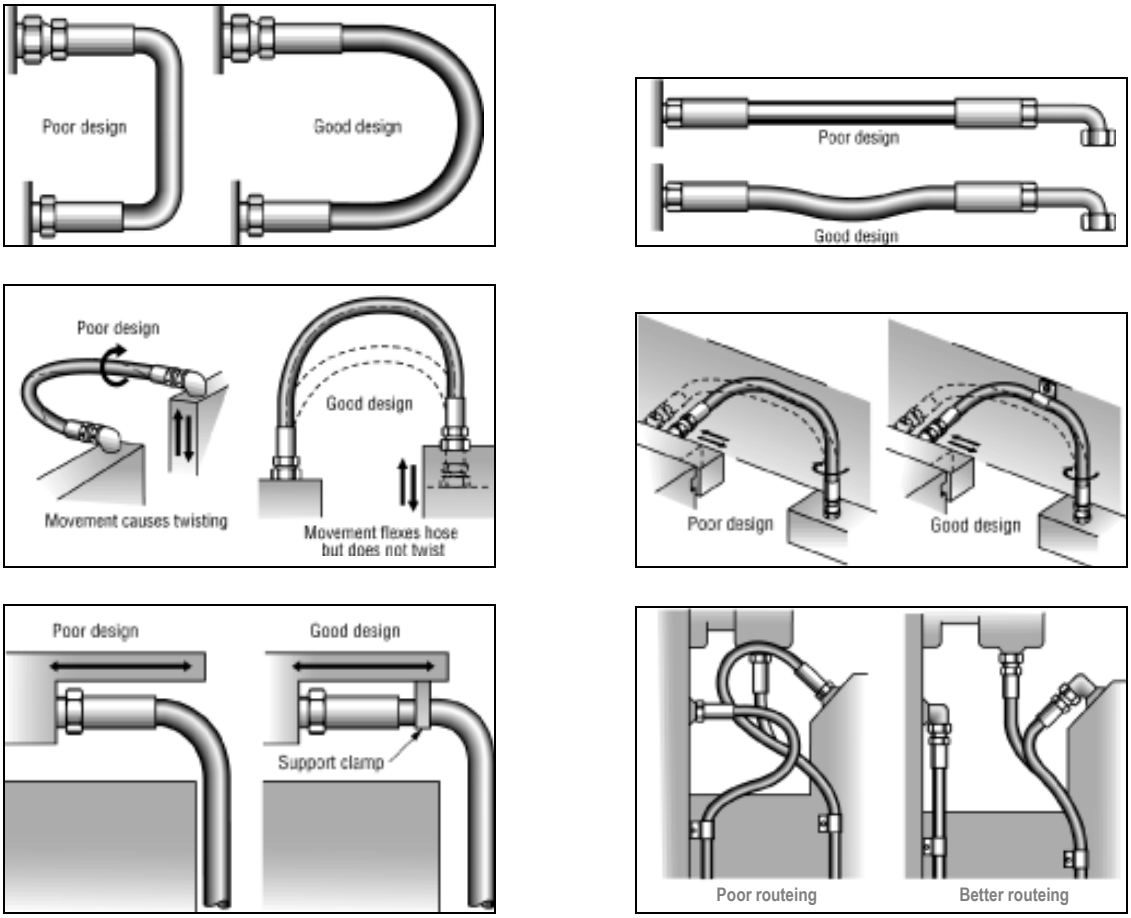


**Figure II-2 – Example of correct installation of flexible hoses**

2.5 *Inspection and maintenance*

2.5.1 Hose assemblies should be inspected frequently and maintained in good order or replaced when there is evidence of distress likely to lead to failure. Any of the following conditions may require replacement of the hose assembly:

.1 leaks at fitting or in flexible hose;

.2 damaged, cut or abraded cover;

.3 kinked, crushed, flattened or twisted flexible hose;

.4 hard, stiff, heat cracked or charred flexible hose;

.5 blistered, soft, degraded or loose cover;

.6 cracked, damaged or badly corroded fittings; and

.7 fitting slippage on flexible hose.

2.5.2 It is expected that hose assemblies may need to be replaced several times in the life of the ship. Manufacturer's recommendations should be followed in this respect. However hoses should be replaced as soon as possible whenever there is doubt as to their suitability to continue in service. Test Reports of flexible hoses should be kept on board to ensure that correct replacement hoses are used when making repairs.

2.6 Flexible pipes should be closely examined and renewed if signs of material cracking or deterioration are evident. Extra care should be exercised in the tightening of these pipe connections to ensure that they are not twisted when re-installed.

2.7 Flexible pipes should be pressure tested to their original design pressure at five-year intervals. Alternatively, such pipes should be the subject of a study aimed at determining their finite life and then be automatically renewed before that life cycle has been reached. Recommendations of engine and fuel system manufacturers should be sought and considered.

## 3 Bellows expansion joints

3.1 *Design*

Expansion joints are designed to accommodate axial and lateral movement. Expansion joints should not be used to compensate for pipe misalignment. Design may be based on an acceptable code or on testing of expansion joints of similar construction, type, size and use. Thermal expansion, contraction and the fatigue life due to vibration are also important points to consider. Where external mechanical damage is possible, the bellows are to be suitably protected. Each bellows expansion joint should be provided with a certificate of hydrostatic pressure testing and conformity of production.

3.2 *Installation*

The bellows expansion joints should be installed in accordance with the manufacturer's instructions and examined under working conditions.

3.3 *Inspection and maintenance*

Bellows expansion joints should be inspected regularly and be replaced whenever there is doubt as to their suitability to continue in service.

## 4 Filters and strainers

4.1 *Design*

4.1.1 Housings and bodies of filters and strainers used in oil fuel, lubricating oil or other flammable oil systems should be made of steel or other equivalent material with a melting point above 930°C and with an elongation above 12%. Other housing and body materials may be utilized provided their use is specially considered on a case-by-case basis in relation to the risk of fire.

4.1.2 All pressure-retaining parts should be suitable for the design temperature and pressures. The filter or strainer design and construction should facilitate cleaning and prevent or minimize spillage during maintenance.

4.1.3 Plug type air vents are not permitted. Air vent cocks or valves should be clearly marked with open/closed positions and the discharge should be led to a safe position.

4.1.4 Oil residues of drain trap should lead to one of the drain tanks.

4.2 *Installation*

Filters and strainers should be located as far away as practicable from hot surfaces and other sources of ignition. They should not be located in positions where spillages could fall onto the flywheel or other rotating machinery parts and be sprayed around. Suitable drip trays should be provided under filters and strainers. A vertical spray shield that will prevent a high pressure fuel or lubricating oil leak from coming into contact with a hot surface should be installed between the strainer and the hot surface. If a hot surface cannot be insulated or the oil filter cannot be located in a safe position, it should be installed in parallel with another filter. The spray shields are to be installed in such a manner as to not impede the servicing of the filter or strainer.

4.3 *Inspection and maintenance*

Filters and strainers should be inspected every time they are opened for cleaning and the cover gaskets or seals should be renewed when necessary. Satisfactory seating and tightening of the cover should be verified before the system is put back into service. The filter or strainer should also be carefully bled of air before returning the unit into service.

## 5 Insulation materials

5.1 *Design*

5.1.1 Insulation of high temperature surfaces should be primarily provided to reduce the risk of fire by reducing the temperature of surfaces below 220°C.

5.1.2 Insulation of hot surfaces, in addition to high temperature surfaces should be considered to reduce the potential risk of fire.

5.1.3 The insulation should be non-combustible and so supported that it will not crack or deteriorate when subject to vibration.

5.2 *Installation*

Manufacturers' instructions should be followed, if available. Permanent insulation should be used to the greatest extent possible. Insulation should be provided with readily removable sections to allow access for normal maintenance. The surface of any oil-absorbent and oil-permeable insulation should be covered by a material which is impervious to oil or oil vapours.

5.3 *Inspection and maintenance*

A regular check of equipment should be made to confirm that the insulation is in place. When maintenance or repair of equipment has been carried out, checks should be made to ensure that the insulation covering the high temperature or hot surfaces has been properly reinstalled or replaced; surface temperature should be measured if considered necessary.

## 6 Pressure, temperature, oil level gauges and sight glasses

6.1 *Design*

All pressure gauges and other similar instruments in oil systems should, wherever possible, be fitted with an isolating valve or cock at the connection to the pressure take off point. The number of pressure take off points should be kept to a minimum and gauge piping runs should be as short as practicable. Copper pipes, where permitted, may be joined by brazing but soldered connections should not be used in oil systems. Temperature gauges in oil systems should be fitted into a fixed pocket (thermo-well). Oil level gauges should be of a design which is approved for the intended service. The glass or equivalent used on oil piping systems, such as sight glasses for overflow pipes of oil tanks, should be of a heat resistant type.

6.2 *Installation*

The installation of level gauges that penetrate below the top of oil tanks is prohibited under SOLAS for passenger ships, and is discouraged for cargo ships. Suitably protected gauges having heat resistant flat glass of substantial thickness and self-closing fittings at each tank connection may be fitted with the permission of the Administration to oil tanks in cargo ships. Self-closing fittings should not have locking devices fitted to keep them in the open position. Round gauge glasses are not permitted.

6.3 *Inspection and maintenance*

Copper gauge piping is particularly sensitive to work-hardening. All gauge pipes and fittings should be regularly inspected and maintained in good working order.

## 7 Pipe fittings

7.1 *Design*

7.1.1 Materials for valves and pipe fittings are to be suitable for the media and service for which the pipes are intended.

7.1.2 All gasket and seal ring materials, and any jointing compounds used, should comply with the requirements of the manufacturer and relevant international standards.

7.1.3 Direct connection of pipe lengths is to be made by direct welding, flanges, threaded joints or mechanical joints, and is to be of international standards or of a design proven to be suitable for the intended purpose.

7.1.4 All copper and aluminium-brass piping should be heat treated (annealed) and fitted with sufficient supports to prevent damage from vibration. Replacement with steel piping should be considered.

7.1.5 All component locking devices, such as spring and tab washers and locking wires should be present and in use. (It is recognized that it is impracticable to lock fuel pump vent screws with wire, due to their frequent use. However, wire loops containing a weight attached to each screw would prevent them unscrewing under the influence of vibration if they became slack.)

7.1.6 Valves fitted to oil fuel tanks under static pressure should be of steel or spheroidal-graphite cast iron with an elongation of 12% or above.

7.1.7 Ordinary cast iron valves may be used in piping systems where the design pressure is lower than 7 bar and the design temperature is below 60°C.

7.2 *Installation*

Pipe fittings, including flanged connections should be carefully tightened without exceeding permissible torque. If necessary, suitable spray shields or sealing tape should be used around flange joints and screwed pipe fittings to prevent oil spraying onto hot surfaces in the event of a leakage.

7.3 *Inspection and maintenance*

Where fitted, compression fittings should be carefully examined and, if necessary, tightened (but not over-tightened) with a torque spanner to the manufacturer's specification. Replacement with flanged connections should be considered.

# PART III ENGINE-ROOMS

## CHAPTER 1 CONTROL OF FLAMMABLE OILS

### 1 Arrangement and installation of pressurized oil fuel systems

1.1 Major factors which can lead to failures of oil fuel system components are:

.1 poor installation, especially insufficient care being taken to provide adequate support (pipe brackets, etc.) and lack of attention to thermal expansion and possible machinery movement due to flexible mountings;

.2 the frequent partial dismantling and reassembly of the system for maintenance purposes;

.3 the effects of high frequency, short duration pressure pulses generated by the action of the fuel injection pumps, which are transmitted back into the oil fuel supply and spill rails; and

.4 vibration.

1.2 *The causes of high pressure pulses in the oil fuel supply and spill systems*

1.2.1 The most common fuel injection pumps (monobloc or "jerk" pumps) are comprised of a plunger moving up and down in a barrel which contains ports for fuel to enter and leave. The pump is designed to provide the variable fuel flow required for the engine to operate under fluctuating load or rpm, by adjustment of the plunger delivery stroke. At a point determined by the engine's fuel requirement, the plunger will uncover the ports and the internal pressures between 80 $N/mm^2$ and 150 $N/mm^2$ will be spilled back into the fuel supply and spill piping.

1.2.2 Each injection pump action generates high magnitude spill pressures followed by periods of reduced pressure. The pressure differences accelerate columns of fuel within the piping system and, when combined with the action of the circulating pump relief valve, cavitation and reflected pressure waves can be caused. Cavitation implosions occur quickly, and can induce very short duration pressure pulses in excess of 10 $N/mm^2$.

1.2.3 Tests have determined that the magnitude of pressure pulses in the fuel system of a typical medium speed diesel engine installation are greatest at 40% to 60% engine load, and will reach 6.0 $N/mm^2$ to 8.0 $N/mm^2$. The pulses are approximately 8 times the nominal pressure of the system. High-speed engines, such as those installed on high-speed craft, generate higher injection pressures and it is likely that the fuel system of these engines will experience correspondingly higher pressure pulses.

1.2.4 High pressure pulses lead to vibration and fatigue and are responsible for many failures of equipment such as thermostats, pressostats and mechanical dampers. The failure of fuel lines and their components will invariably involve fatigue and the initiation of fractures due to tensile stress.

1.3 *Design consideration*

1.3.1 It is essential that the fuel system is designed to accommodate the high pressure pulses which will be generated by the injection pumps. The engine manufacturer and/or the fuel installation manufacturer and the piping installer, etc., should be consulted for an explicit statement of the fuel system parameters including the maximum pressures which will be generated. Many engine manufacturers, aware of the potential risks due to high pressure pulses within the fuel system, now aim to limit the magnitude of the pulses to 1.6 $N/mm^2$ at the engine fuel rail outlets.

1.3.2 The alternative approaches which may be considered by the designer are:

.1 to design the fuel system such that it is able to contend with the magnitude of pressure pulses generated. Piping systems should be designed and installed to an appropriate classification society or ISO specification;

.2 to install pressure damping devices; or

.3 to specify injection pumps which are designed to eliminate or reduce high pressure pulses.

1.3.3 The fuel line between the fuel tank and the engine is made up of several parts often from different suppliers. The fact that these suppliers may be unaware of, and therefore do not take into account, the pressures that may be placed on their equipment by the other components of the system, is often the reason for the system's failure. The specification, design and installation of all of the components of the fuel system should be carefully coordinated to ensure that they are all suitable individually, and in combination with the other components, for the anticipated high pressure pulses.

1.3.4 There are a number of pressure damping devices which have been fitted within fuel systems. Mechanical pressure accumulators and gas filled bellows have both been used however, in some cases, problems of slow response and failure due to fatigue and vibration have been reported.

1.3.5 Fuel pipes should be of steel and supports should be adequate to prevent fatigue due to vibration through the structure from the engines and propellers. The support arrangements should also protect the system from vibration caused by high pressure pulses. Copper and aluminium-brass pipes should not be used as their inherent work hardening characteristics make them prone to failure when subjected to vibration.

1.3.6 Experience indicates that compression couplings require careful attention to tightening procedures and torques to avoid leaks or damage to the pipe when subjected to over-tightening. They should not be used in the fuel supply line of the injection pumps and spill system. Flanged connections should be used in place of compression couplings.

1.3.7 In multi-engine installations supplied from the same fuel source, means of isolating the fuel supply to and spill from individual engines should be provided. The means of isolation should be operable from the control position. Without the ability to isolate the fuel supply and spill lines on each engine a single leak could necessitate the need to stop all engines, thus putting the manoeuvrability of the vessel at risk.

1.4 *Installation*

1.4.1 One designated person should be responsible for coordinating the initial onboard installation of the complete fuel system.

1.4.2 The coordinator should be able to understand the overall design criteria and ensure that the design intent is fully implemented at the time of installation.

1.5 *Inspection and maintenance*

1.5.1 The ship Safety Management System should contain procedures to identify vibration, fatigue, defects, poor components and poor fitting of the fuel system and ensure that proper attention to protecting hot surfaces is maintained. Means, such as check lists should be prepared to ensure that all procedures are followed at major overhauls and that all components, supports, restraints, etc., are refitted on completion of such work. The installed system should be routinely inspected for:

.1 verification of the adequacy of its supports and the condition of its fittings;

.2 evidence of fatigue stresses to welded or brazed pipes and connections;

.3 assessment of the level of vibration present; and

.4 condition of the lagging or shielding of hot surfaces.

1.5.2 Components of the fuel system should be comprehensively examined, particularly threaded connections, at each dismantling.

1.5.3 Injection pump holding-down bolts should be proved tight by testing with a torque spanner at frequent intervals (not to exceed 3 months).

1.5.4 The supports and retaining devices of the low pressure fuel system should be checked at regular intervals (not to exceed 6 months), to be proved tight and to provide adequate restraint. The lining of such devices should be examined for wear and renewed if they provide insufficient support.

## 2 Spray shields for joints of pressurized flammable oil piping systems

2.1 *Application*

Spray shields should be fitted around flanged joints, flanged bonnets and any other flanged or threaded connections of oil fuel and lubricating oil systems having an internal pressure exceeding 0.18 $N/mm^2$ which have the possibility of being in contact with potential ignition sources by direct spray or by reflection. The purpose of spray shields is to prevent the impingement of sprayed flammable oils onto a high temperature surface or other source of ignition.

2.2 *Design and installation*

2.2.1 Many types of spray shields are possible to avoid spray at flanged connections. For example, the following may be treated as spray shield:

.1 thermal insulation having sufficient thickness;

.2 anti-splashing tape made of approved materials. Caution should be taken to avoid using the anti-splashing tape in areas of high temperature so as to maintain its adhesive characteristics. In case of rewrapping of the new tape, the surface area of the tape should be clean and dry; and

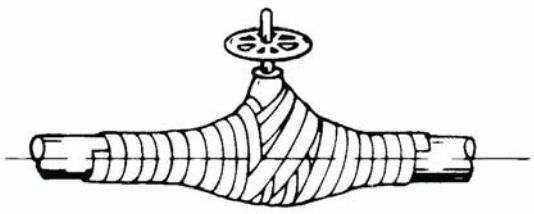

**Figure III-1 – Example of correct taping method**

.3 where an anti-spray cover is wrapped around the side of flange, it is not necessary to wrap tightening bolts completely.

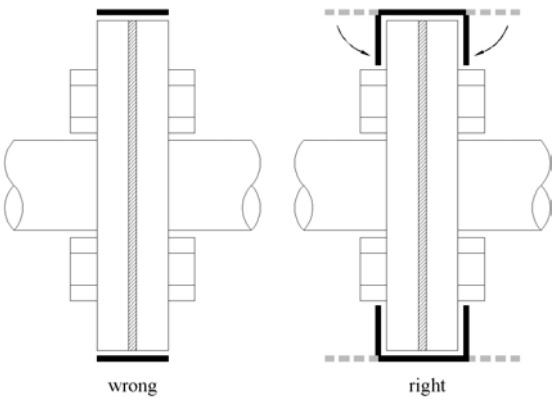


**Figure III-2 – Recommended arrangement of anti-spray cover for flange joint**

2.2.2 Anti-splashing tape or other equivalent method may be treated as spray shield on threaded connections. Additionally, the use of sealing tape at thread of union joint is strongly recommended to prevent spray.

2.2.3 Spray shields should be applied not only to a piping system but also to pressurized equipment and/or fittings on oil fuel systems, such as heat exchanger, tube plate and filter or strainer body joints.

2.3 *Inspection and maintenance*

Spray shields should be inspected regularly for their integrity and any which have been removed for maintenance purposes should be refitted on completion of the task according to the manufacturer's instructions.

## 3 Jacketed high pressure fuel lines of internal combustion engines

3.1 *Application*

3.1.1 All external high pressure fuel delivery lines between the high pressure fuel pumps and fuel injectors are required to be protected with a jacketed piping system capable of containing fuel from a high pressure line failure.

3.1.2 The requirements are applicable to internal combustion engines installed in any area on board ships irrespective of service and location.

3.1.3 Single cylinder and multi-cylinder engines having separate fuel pumps and those having multiple fuel injection pump units are included.

3.1.4 For the purpose of these Guidelines lifeboat engines and diesel fire pumps are excluded.

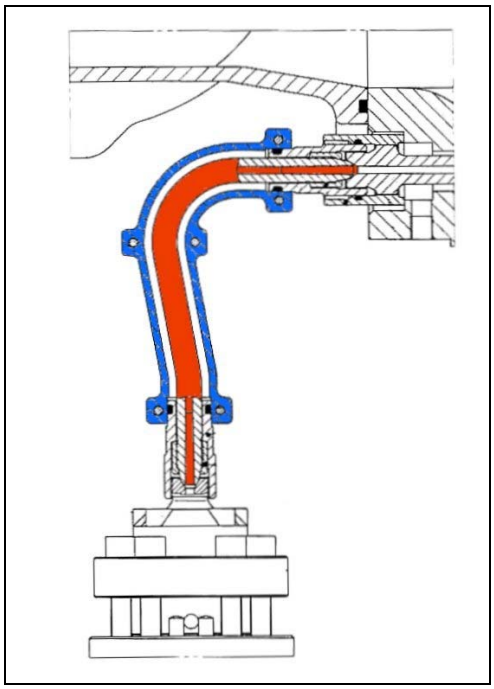

**Figure III-3 – Sample of jacketed pipe**

3.2 *Suitable enclosure*

3.2.1 For engines of less than 375 kW where an enclosure is fitted, the enclosure is to have a similar function to jacketed pipes, i.e. prevent spray from a damaged injector pipe impinging on a hot surface.

3.2.2 The enclosure is to completely surround the injection pipes except that existing "cold" engine surfaces may be considered as part of the enclosure.

3.2.3 The enclosure is to have sufficient strength and cover area to resist the effects of high pressure spray from a failed fuel pipe in service, prevent hot parts from being sprayed and to restrict the area that can be reached by leaked fuel. Where the enclosure is not of metallic construction, it is to be made of non-combustible, non oil-absorbing material.

3.2.4 Screening by the use of reinforced tapes is not acceptable as a suitable enclosure.

3.2.5 Where leaked oil can reach hot surfaces, suitable drainage arrangements are to be fitted to enable rapid passage of leaked oil to a safe location which may be a drain tank. Leaked fuel flow onto "cold" engine surfaces can be accepted, provided that it is prevented from leaking onto hot surfaces by means of screens or other arrangements.

3.2.6 Where the enclosure has penetrations to accommodate high pressure fittings, the penetrations are to be a close fit to prevent leakage.

3.3 *Design*

Two systems have been successfully used in meeting this requirement, namely, rigid sheathed fuel pipe and flexible sheathed fuel pipe. In both systems the sheathing is to fully enclose the pipe and is to resist penetration by a fine spray or jet of oil from a failure in the pipe during service. Also the annular space and drainage arrangements should be sufficient to ensure that in the event of complete fracture of the internal pipe, an excessive build up of pressure cannot occur and cause rupture of the sheath. The suitability of such pipes should be demonstrated by prototype testing. The drainage arrangement should prevent contamination of lubricating oil by oil fuel, and should include an alarm to indicate leakage has occurred.

3.4 *Inspection and maintenance*

Regardless of the system selected, little additional maintenance or periodic inspection is required to keep the jacketed fuel lines in proper working order. However, jacketed pipes should be inspected regularly and any drainage arrangement which may have been disconnected for maintenance purposes should be refitted on completion of the task.

## CHAPTER 2 CONTROL OF IGNITION SOURCE

### 1 Insulation of hot surfaces and high temperature surfaces

1.1 *Design*

1.1.1 Insulation practice

Different insulation methods for high temperature surfaces are possible and their design should be confirmed by relevant Administrations or recognized organizations. Examples of typical insulation practice are shown in figures III-4 and III-5 below.

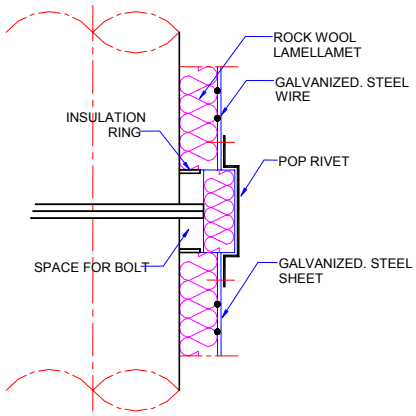


**Figure III-4 – Insulation method on flanged part**

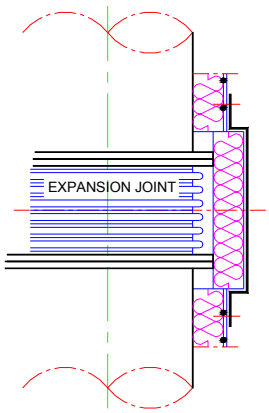


**Figure III-5 – Insulation method on compensator part**

1.1.2 Exhaust gas piping

In order to avoid a discontinuity of insulation of the exhaust gas piping (i.e. the exhaust gas piping before and after turbo charger and the exhaust gas piping between cylinder and exhaust gas manifold), special finishing material (e.g., pop-riveted sheet metal or oil-impervious finish insulation mat) should be used as shown in figure III-6.

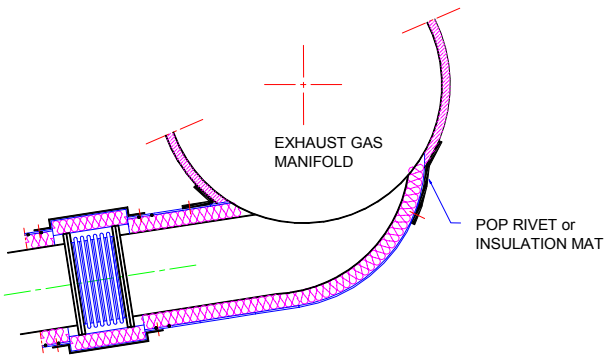


**Figure III-6 – Insulation practice of discontinuous part**

1.1.3 Exhaust gas manifolds

Even though the insulation of the exhaust gas manifold is considered sturdy and satisfactory, special attention should be given to insulating the manifold supports since they are susceptible to become hot surfaces due to heat transfer.

1.1.4 Exhaust gas turbo chargers

Dry type turbo chargers, if installed, should be completely insulated, as far as practicable, to prevent the existence of high temperature surfaces.

1.1.5 Cylinder head indicator cocks

Exposed indicator cocks should be insulated in order to cover the high temperature surface.

1.1.6 Superheated steam pipes

In order to avoid a discontinuity of insulation of superheated steam piping, special finishing material, e.g., pop-riveted sheet metal cladding or oil-impervious finish insulation mat, should be used.

1.2 *Inspection and maintenance*

1.2.1 A regular check of equipment or material should be made to confirm that the insulation is correctly installed. When maintenance or repair to equipment has been carried out, checks should be made to ensure that the insulation covering the heated surfaces has been properly reinstalled or replaced. Special attention should be paid to the following:

.1 insulation areas where vibration may be present;

.2 discontinuous part of exhaust gas piping and turbo charger; and

.3 other suspect parts.

## 2 Protection of electrical equipment

2.1 *Design and installation*

2.1.1 Electrical equipment is to be installed in well ventilated and adequately lit spaces in which inflammable gases cannot accumulate and where they are not exposed to the risk of damage from flammable oils.

2.1.2 Switchboards are to be installed in dry places away from the vicinity of flammable oil pipes.

2.1.3 Cables fitted in any space where flammable oils or gases may accumulate are to have a metallic sheath or an impervious sheath.

2.1.4 Where cables are installed in bunches, and the risk of fire propagation is considered high, special precautions are to be taken in cable installation to prevent fire propagation.

## 3 Identification and protection of potential ignition sources

3.1 While oil impingement on uninsulated hot surfaces has been known to start fires simply due to the vapour reaching its auto-ignition temperature, the hazard is even greater if there is the presence of a flame, spark, naked light bulb, or electric arc.

3.2 The major sources of the above that exist in engine-rooms are as follows:

.1 cylinder head indicator cocks of internal combustion engines;

.2 connections of burner assemblies used for boilers, incinerators and inert gas generators;

.3 electrical panels fitted with magnetic contactors, etc., which undergo repetitive ON/OFF operation during the machinery operation such as purifier control and air compressor panels;

.4 moving parts subject to relative motion which may lead to metal to metal contact; and

.5 drain cocks of exhaust gas pipes.

3.4 In case of a flammable oil line located near any of the above ignition sources, it is necessary to carefully consider the probability of spray, possible spray direction, spray distance, etc., and to isolate the ignition sources as far as practicable.

# CHAPTER 3 CONTROL OF VENTILATION

## 1 Design of ventilation systems

1.1 The ventilation of machinery spaces should be sufficient under normal conditions to prevent accumulation of oil vapour.

1.2 To control and minimize the hazards from the spread of smoke, means for controlling smoke in machinery spaces should be provided.

1.3 Suitable arrangements should be available to permit the release of smoke, in the event of fire, from machinery spaces of category A. Reversible ventilation systems may be acceptable for this purpose.

1.4 The position of fire detectors should be determined with due regard to the ventilation characteristics of the space.

## CHAPTER 4 USEFUL ARRANGEMENT, INSTALLATION AND APPARATUS FOR FIRE SAFETY

### 1 Measures for the prevention of spillage of flammable oils

1.1 *Tanks*

1.1.1 Tanks used for the storage of fuel oil, lubricating oil, hydraulic oil, thermal oil and other flammable oils, together with their fittings, should be constructed so as to prevent overpressure and spillages due to leakage or overfilling.

1.1.2 An alarm device should be provided to give warning when the oil reaches a predetermined level in the tank or, alternatively, a sight glass should be provided in the overflow pipe to indicate when any tank is overflowing. Such sight glasses should be placed on vertical pipes only, in readily visible positions, and should be shown by testing to have a suitable degree of fire resistance.

1.1.3 Any overflow pipe should have a sectional area of at least 1.25 times that of the filling pipe and should be led to an overflow tank of adequate capacity or to a storage tank having space reserved for overflow purposes.

1.2 *Air and overflow pipes*

1.2.1 Air pipes from oil fuel tanks and heated lubricating oil tanks should be led to a safe position on the open deck. They should not terminate in any place where a risk of ignition is present. Air pipes from unheated lubricating oil tanks may terminate in the machinery space, provided that the open ends are so situated that issuing oil cannot come into contact with electrical equipment, heated or hot surfaces.

1.2.2 Any overflow pipe should have a sectional area of at least 1.25 times that of the filling pipe and should be led to an overflow tank of adequate capacity or to a storage tank having space reserved for overflow purposes.

1.2.3 In order to fulfil the requirements of SOLAS regulation II-1/26.11, a common air pipe is commonly used. In this case the air pipes from heated and unheated oil tanks should be separated.

1.3 *Measuring devices of tanks*

1.3.1 Where sounding pipes are used, they should not terminate in any space where the risk of ignition of spillage from the sounding pipe might arise. In particular, they should not terminate in passenger or crew spaces. As a general rule, they should not terminate in machinery spaces. However, where the classification society considers that these latter requirements are impracticable, it may permit termination of sounding pipes from tanks in machinery spaces, on condition that all of the following requirements are met:

.1 an oil level gauge of an approved type is provided;

.2 the sounding pipes terminate in locations remote from ignition hazards, unless precautions are taken such as the fitting of effective screens to prevent the oil fuel in the case of spillage from the sounding pipes, coming into contact with a source of ignition; and

.3 the terminations of sounding pipes are fitted with self-closing blanking devices and with a small-diameter self-closing control cock located below the blanking device for the purposes of ascertaining before the blanking device is opened that oil fuel is not present. Provision should be made so as to ensure that any spillage of oil fuel through the control cock involves no ignition hazard. Locking arrangements for self-closing blanking devices to be kept in the open position should not be permitted.

1.3.2 Short sounding pipes may be used for tanks, other than double bottom tanks, without the additional closed level gauge provided an overflow system is fitted.

1.3.3 Oil level gauges may be used in place of sounding pipes, subject to the following conditions:

.1 in passenger ships, such gauges should not require penetration below the top of the tank and their failure or overfilling of the tanks will not permit release of fuel; and

.2 in cargo ships, the failure of such gauges or overfilling of the tank should not permit release of fuel. The use of cylindrical gauge glasses is prohibited. The classification society may permit the use of oil-level gauges with flat glasses and self-closing valves between the gauges and fuel tanks.

**2 Fuel oil isolation valves for multi-engines**

2.1 In order to fulfil SOLAS regulation II-2/4.2.2.5.5, isolating valves should be located and operable from a position not rendered inaccessible by a fire on any of the engines.

2.1.1 Where practicable, isolating valves should be located at least 5 m away from engines in any direction. If this is not possible, the operating position of the valves should be protected by an obstruction. Figure III-8 shows an example of protection by obstructions.

2.1.2 If the above is impracticable, other means of protection capable of enabling access to the isolating valves in the event of a fire might be acceptable.

2.1.3 Figure III-9 shows the possible areas affected by fire and figure III-10 shows a schematic diagram of a typical isolation valve arrangement.

2.1.4 Isolating valves controlled remotely could be acceptable. In this case, the operating mechanism should be protected from fire.

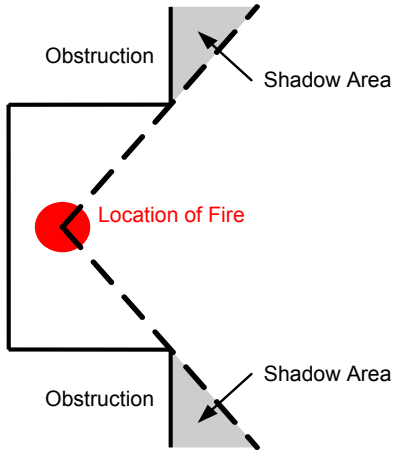


**Figure III-8 – Safe isolating valve operating position protected by obstruction**

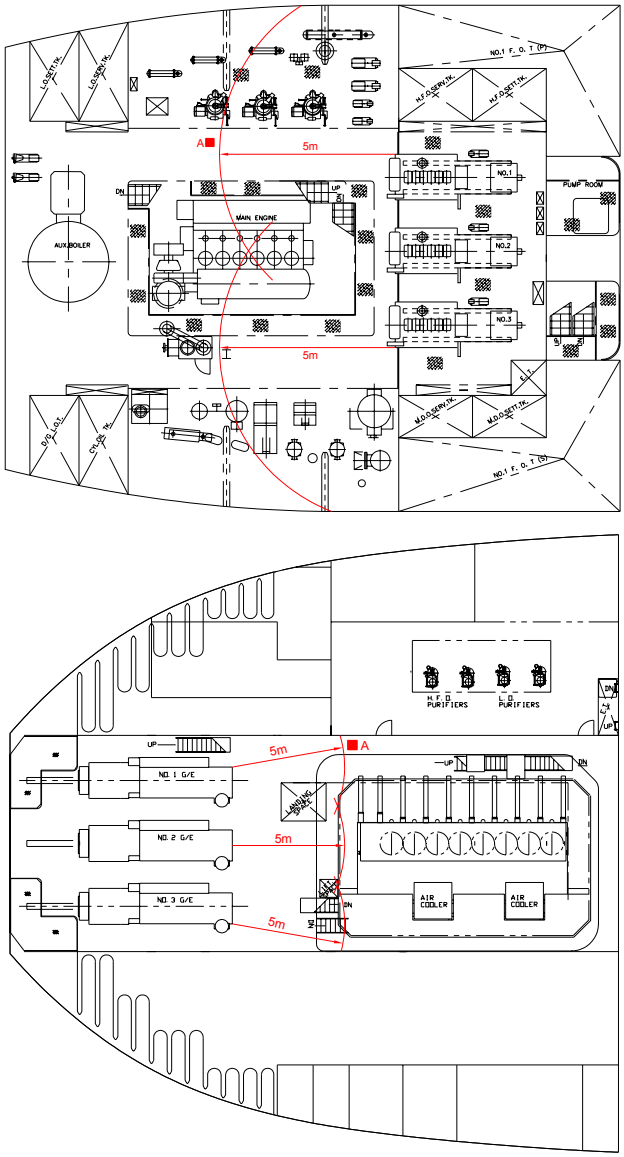


**Figure III-9 – Isolation valves arrangement for multi-engines**

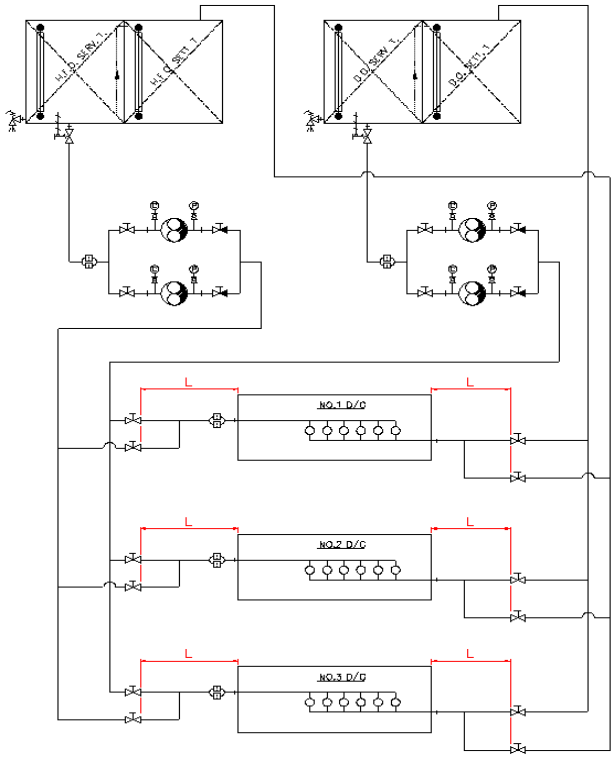


**Figure III-10 – Acceptable arrangement of isolation valves**

## CHAPTER 5 EQUIPMENT INSTALLATION

### 1 Boilers

1.1 *System arrangement*

1.1.1 Boilers should be suitably insulated with non-combustible material and sheathed with steel or other non-combustible material the surface of which is to be impervious to oil and oil vapours. The clearance spaces between the boilers and tops of double bottom tanks, and between the boilers and the sides of storage tanks in which oil fuel and cargo oil is carried, should be adequate for the free circulation of air necessary to keep the temperature of the stored oil sufficiently below its flashpoint, except in the case of tanks not heated to temperatures within 10°C below the flashpoint of the fuel oil.

1.1.2 The oil burning units should meet the following requirements:

.1 oil burners should be so arranged that they cannot be withdrawn unless the oil supply to the burners is cut off; and

.2 fuel supply to all burners should be capable of being automatically cut off in case of total lack of flame in the combustion chamber; moreover, this should be warned by a visual and audible alarm. The alarms need not be fitted for domestic boilers.

1.1.3 Where boilers are located in machinery spaces on ’tween decks and the boiler rooms are not separated from the machinery space by watertight bulkheads, the ’tween decks should be provided with coamings at least 200 mm in height. This area may be drained to the bilges. The drain tank is not to form part of an overflow system.

## 2 Thermal oil installations

### 2.1 *System arrangement*

2.1.1 The inlet and outlet valves of oil-fired thermal oil heaters and exhaust-fired thermal oil heaters should be controllable from outside the compartment where they are situated. As an alternative, an arrangement for quick gravity drainage of the thermal oil contained in the system into a collecting tank is acceptable.

2.1.2 Heating of liquid cargoes with flashpoints below 60°C should be arranged by means of a separate secondary system, located completely within the cargo area. However, a single circuit system may be accepted on the following conditions:

.1 the system is so arranged that a positive pressure in the coil should be at least 3 m water column above the static head of the cargo when circulating pump is not in operation;

.2 the thermal oil system expansion tank should be fitted with high and low level alarms;

.3 means should be provided in the thermal oil system expansion tank for detection of flammable cargo vapour. Portable equipment may be accepted; and

.4 valves for the individual heating coils should be provided with locking arrangement to ensure that the coils are under static pressure at all times.

2.1.3 The thermal oil circulating pumps should be arranged for emergency stopping from a position outside the space where they are situated.

2.1.4 Vents from expansion tanks and thermal oil storage tanks of thermal oil heating plants should be led to open deck.

### 2.2 *Exhaust-fired thermal oil heaters*

2.2.1 The heater should be so designed and installed that all tubes may easily and readily be inspected for signs of corrosion and leakage.

2.2.2 Visual inspection and tightness testing of the heater tubes to not less than the working pressure should he carried out annually, and hydraulic testing should be carried out bi-annually.

2.2.3 The heater should be fitted with temperature sensor(s) and an alarm for fire detection.

2.2.4 A fixed fire-extinguishing and cooling system should be fitted. A drenching system providing at least 5 $l/m^2$/min of water may be accepted. The exhaust ducting below the exhaust boiler should be arranged for adequate collection and drainage, to prevent water flowing into the diesel engine. The drain should be led to a suitable location.

## 3 Purifier rooms

3.1 *System arrangement*

3.1.1 As far as practicable, purifiers and associated components should be placed in a separate room, enclosed by bulkheads having effective construction and rooms should be provided with:

.1 independent mechanical ventilation or a ventilation arrangement which can be isolated from the machinery space ventilation;

.2 fire-detecting and fire-extinguishing systems.

3.1.2 If it is impracticable to locate the main components in a separate room, the purifiers and associated components should be located in a space which is equipped with the following:

.1 Scuppers having sufficient capacity to minimize the free surface of oil. Where drain pipes are provided from collected leakages, they should be led to a suitable oil drain tank not forming part of an overflow system.

.2 Spray shields in way of any connections of flammable oil pipes; any leakage should be led to scuppers.

3.1.3 The control panel should be located in an area in which flammable mist cannot accumulate.

## 4 Oil heaters

4.1 *System arrangement*

4.1.1 Where steam heaters or heaters using other heating media are provided in fuel or lubricating oil systems, they should be fitted with at least a high temperature alarm or low flow alarm in addition to a temperature control, except where the temperature limit for the ignition of the medium cannot be reached.

4.1.2 When electric heaters are fitted, means should be provided to ensure that heating elements are permanently submerged during operation. In order to avoid a heating element surface temperature of 220°C and above, a safety temperature switch, independent from the automatic control sensor, should be provided. The safety switch should cut off the electrical power supply in the event of excessive temperature and should be provided with a manual reset.

4.1.3 Containment enclosures should be fitted with adequate drainage. Where drain pipes are provided from collected leakages, they should be led to a suitable oil drain tank not forming part of an overflow system.

## 5 Hydraulic power packs

5.1 *System arrangement*

5.1.1 Hydraulic power packs of more than 50 kW with a working pressure more than 100 bar should be installed in specially dedicated spaces, with a separate ventilation system.

# PART IV CARGO PUMP-ROOMS

## CHAPTER 1 CONTROL OF FLAMMABLE MATERIALS

### 1 General

1.1 Requirements described below should be applied to vessels carrying oils with flashpoints not exceeding 60°C (closed cup test).

1.2 Alternative design and arrangements might be acceptable, if new design meets SOLAS regulation II-2/17.

### 2 Equipment and fittings on cargo piping systems

2.1 *Materials*

2.1.1 Aluminium pipes are prohibited except those used in ballast tanks and inerted cargo tanks.

2.2 *Piping arrangement and design*

2.2.1 In order to avoid the generation of static electricity when cargo is loaded directly into tanks, the loading pipes, as far as practicable, are to be led to the lowest area in the tank.

2.2.2 Spray shields or spray protection covers should be provided on any detachable connections and around the glands of cargo handling pumps in order to reduce the formation of mist.

## CHAPTER 2 CONTROL OF IGNITION SOURCE

### 1 General

1.1 The steam and heating media temperature within the cargo area is not to exceed 220°C.

1.2 Any potential ignition sources are to be protected.

### 2 Lighting system and protection of electrical equipment

2.1 Glazed port lights providing illumination to the pump-rooms are to be effectively protected from mechanical damage by strong covers secured from the side of the safe space.

2.2 Lighting other than emergency lighting should be interlocked with ventilation.

### 3 Protection of penetration to other spaces

3.1 Any penetration of the engine-room boundary or safety area passing through a pump-room bulkhead should be provided with the following:

.1 gas tight sealing device with efficient lubricant (periodic greasing type is not permitted); and

.2 temperature measuring device.

## 4 Temperature monitoring system for pumps in cargo pump-rooms

4.1 *Design requirements*

4.1.1 Except for pump-rooms intended solely for ballast transfer or fuel oil transfer, temperature monitoring systems for pumps should be provided.

4.1.2 The following pumps installed in cargo pump-rooms, which may be driven by shafts passing through pump-room bulkheads, are included:

.1 cargo pumps including slop pumps;

.2 ballast pumps;

.3 stripping pumps; and

.4 tank cleaning pumps.

4.1.3 The following pumps might be omitted:

.1 small pumps of 1 $m^3$/h capacity or less; and

.2 bilge pumps.

4.2 *System arrangements*

4.2.1 Sensing points are to be provided as follows:

.1 bulkhead shaft glands;

.2 bearings; and

.3 pump casings.

4.2.2 In case of parallel bearing support with common oil bath, only one bearing sensor might be installed.

4.2.3 The range of temperature for sensors is recommended to be from 0°C to 250°C and the setting point to about 60°C to 80°C in consideration to the kind of pumps, cargoes and environmental condition, which would automatically shut down the pump when the set point is reached.

4.2.4 Sensors should be installed so that the end of sensor reaches the measuring points and is fixed permanently.

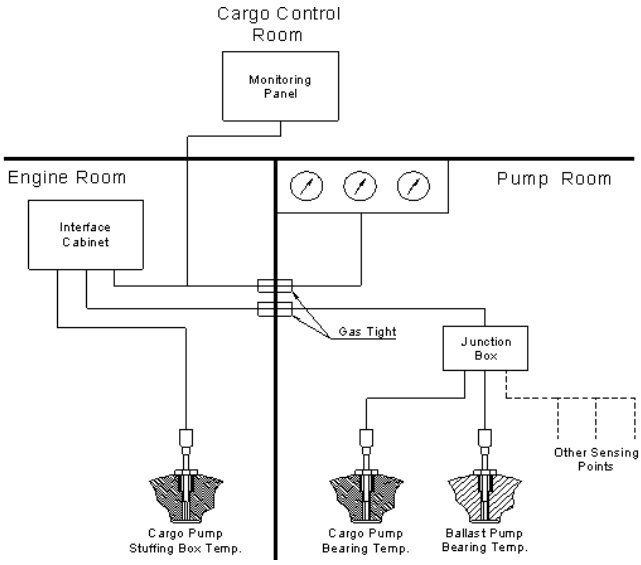


**Figure IV-1 – Sample of temperature monitoring system**

## CHAPTER 3 CONTROL OF VENTILATION

### 1 Design criteria of ventilation systems

.1 cargo pump-rooms should be mechanically ventilated and the capacity should be 20 air changes per hour of the total volume of the pump-room;

.2 the position of the vent outlet should be arranged at a distance of at least 3 m measured horizontally from any ignition source and from the nearest opening to accommodation, service or machinery spaces;

.3 an emergency intake located about 2 m above the pump-room lower grating is to be provided. This emergency intake is to be used when the lower intake is sealed off due to flooding in the bilges. The emergency intake should have a damper fitted which is capable of being closed from the exposed main deck and lower grating level;

.4 floor gratings should not disturb the free flow of air; and

.5 normally, the density of petroleum product vapours are heavier than air (x 2), however, the density of diluted gas/air mixture is closer to air (x 1.5). Therefore, vapour density and pump-room temperature should be carefully considered for the design of the ventilation arrangement.

### 2 Gas detection systems

2.1 *Design requirements*

.1 sampling lines should not run through gas-safe spaces;

.2 gas analysing units located in dangerous areas should be of the explosion-proof type;

.3 gas sampling pipes should be equipped with flame arresters;

.4 sampling points should be located in zones where air circulation is reduced (dead spots such as recessed corners);

.5 the following should be considered in selecting hydrocarbon gas detector and detection positions in cargo pump-rooms:

.5.1 shape of the cargo pump-room; and

.5.2 placement of exhaust duct considering the flow characteristics;

.6 if necessary, actual demonstration tests or computational simulation analysis should be carried out;

.7 a hydrocarbon gas detector is recommended to be installed in the following places:

.7.1 (perpendicular) upper part of the main cargo pump or between two cargo pumps;

.7.2 one (1) detector within 30 cm above the lowest part of the cargo pump-room bottom floor; and

.7.3 one (1) detector every 10 m length or width of the cargo pump-room;

.8 sequential sampling is acceptable as long as it is dedicated to the pump-room, including exhaust ducts, and if the sampling time is reasonably short;

.9 sample gas should be provided with or connected to the analysing unit for regular calibration, otherwise calibration records carried out by a specialist should be kept on board; and

.10 sampling tubing should be resistant to water and cargo vapour.

2.2 *The setting value*

.1 audible and visual alarms are to be activated by the hydrocarbon gas with the concentration of a pre-set level which is no higher than 10% of the lower flammable limit (LFL);

.2 the setting value should be set carefully, because LFL of a mixture of hydrocarbon gases changes according to their mixing ratio;

.3 in the case of a ship carrying two or more cargoes, the set value of an alarm point should be corrected based on the lowest LFL of each cargo, and the following information and equipment should be provided;

.1 LFL data of cargo from shippers, etc.; and

.2 gas detectors with function to allow adjustment of the alarm setting.

2.3 *System arrangement*

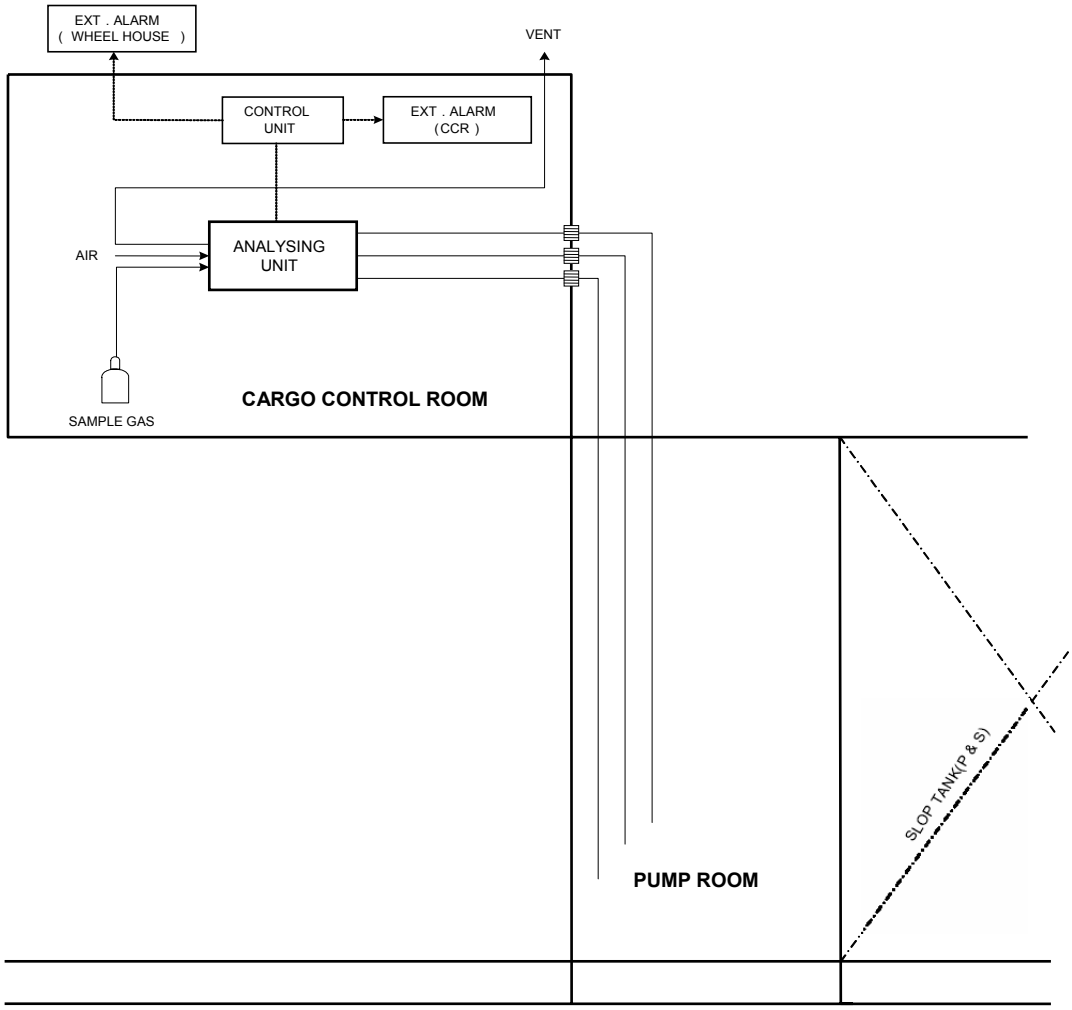


**Figure IV-2 – Monitoring system of the concentration of hydrocarbon gases**

***

# ANNEX 18

## DRAFT MSC CIRCULAR

## UNIFIED INTERPRETATIONS OF SOLAS CHAPTER II-2

1 The Maritime Safety Committee, at its [eighty-sixth session (27 May to 5 June 2009)], with a view to providing more specific guidance for application of the relevant requirements, of the 1974 SOLAS Convention, approved a unified interpretation for SOLAS regulation II-2/4.2.2.3.2 (Oil fuel tank arrangements) prepared by the Sub-Committee on Fire Protection, at its fifty-third session, as set out in the annex.

2 Member Governments are invited to use the annexed unified interpretation as guidance when applying SOLAS regulation II-2/4.2.2.3.2 on board ships constructed on or after [*date of approval of the circular*] and to bring the unified interpretations to the attention of all parties concerned.

ANNEX

## UNIFIED INTERPRETATIONS OF SOLAS CHAPTER II-2

### Regulation II-2/4.2.2.3.2 – Oil fuel tanks

Where oil fuel tanks are necessarily located adjacent to or within machinery spaces of category A, at least one of their vertical sides should be contiguous to the machinery space boundaries and the area of the tank boundary common with the machinery spaces should be kept to a minimum. The arrangements in the diagrams below are acceptable provided that the requirements of MARPOL I/12A are met.

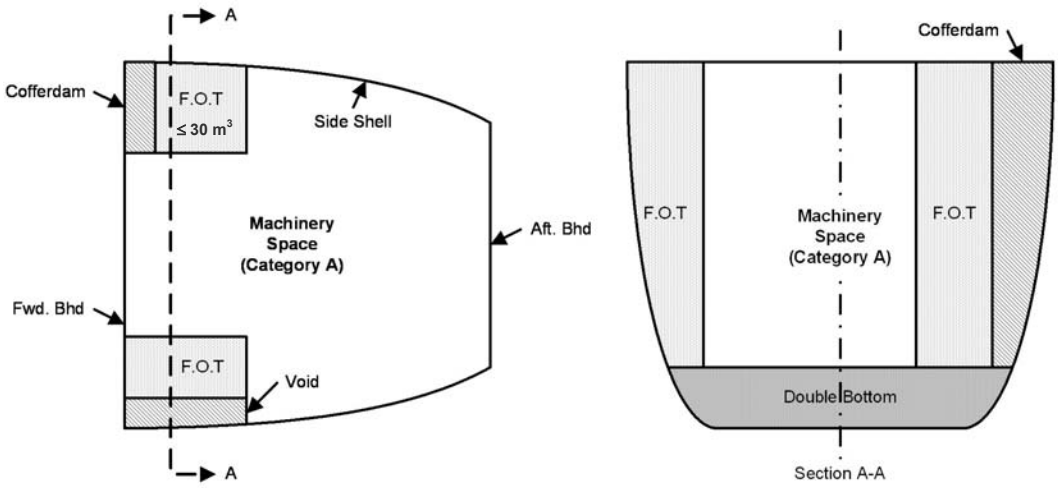


**Oil fuel tank arrangements**

***

# ANNEX 19

## DRAFT AMENDMENT TO SOLAS REGULATION II-2/4.5.7

## CHAPTER II-2
## CONSTRUCTION – FIRE PROTECTION, FIRE DETECTION AND FIRE EXTINCTION

### Part B
### Prevention of fire and explosion

**Regulation 4 – Probability of ignition**

Paragraph 5.7 is replaced as follows:

"**5.7 Gas measurement and detection**

5.7.1 *Portable instrument*

Tankers shall be equipped with at least one portable instrument for measuring oxygen and one for measuring flammable vapour concentrations, together with a sufficient set of spares. Suitable means shall be provided for the calibration of such instruments.

5.7.2 *Arrangements for gas measurement in double-hull spaces and double-bottom spaces*

5.7.2.1 Suitable portable instruments for measuring oxygen and flammable vapour concentrations in double-hull spaces and double-bottom spaces shall be provided. In selecting these instruments, due attention shall be given to their use in combination with the fixed gas sampling line systems referred to in paragraph 5.7.2.2.

5.7.2.2 Where the atmosphere in double-hull spaces cannot be reliably measured using flexible gas sampling hoses, such spaces shall be fitted with permanent gas sampling lines. The configuration of gas sampling lines shall be adapted to the design of such spaces.

5.7.2.3 The materials of construction and dimensions of gas sampling lines shall be such as to prevent restriction. Where plastic materials are used, they shall be electrically conductive.

5.7.3 *Arrangements for fixed hydrocarbon gas detection systems in double-hull and double-bottom spaces of oil tankers*

5.7.3.1 In addition to the requirements in paragraphs 5.7.1 and 5.7.2, oil tankers of 20,000 dwt and above, constructed on or after [*date*], shall be provided with a fixed hydrocarbon gas detection system complying with the International Code for Fire Safety Systems for measuring hydrocarbon gas concentrations in all ballast tanks and void spaces of double-hull and double-bottom spaces adjacent to the cargo tanks, including the forepeak tank and any other tanks and spaces under bulkhead deck adjacent to cargo tanks.

5.7.3.2 Oil tankers provided with constant operative inerting systems for such spaces need not be equipped with fixed hydrocarbon gas detection equipment.

5.7.3.3 Notwithstanding the above, cargo pump-rooms subject to the provisions of paragraph 5.10 of this regulation need not comply with the requirements of this paragraph."

***

# ANNEX 20

# DRAFT NEW CHAPTER 16 OF THE FSS CODE

The new chapter 16 is added as follows:

## "Chapter 16 − Fixed hydrocarbon gas detection systems

### 1 APPLICATION

1.1 This chapter details the specifications for fixed hydrocarbon gas detection systems as required by chapter II-2 of the Convention.

1.2 A combined gas detection system required by regulation II-2/4.5.7.3 and under regulation II-2/4.5.10 may be accepted in cases where the system fully complies with the requirement of regulation II-2/2 of the Convention.

### 2 ENGINEERING SPECIFICATIONS

### 2.1 General

2.1.1 The fixed hydrocarbon gas detection system referred to in chapter II-2 of the Convention shall be designed, constructed and tested to the satisfaction of the Administration based on performance standards developed by the Organization[1].

2.1.2 The system shall be comprised of a central unit for gas measurement and analysis and gas sampling pipes in all ballast tanks and void spaces of double-hull and double-bottom spaces adjacent to the cargo tanks, including the forepeak tank and any other tanks and spaces under bulkhead deck adjacent to cargo tanks.

2.1.3 The system may be integrated with the cargo pump-room gas detection system provided the spaces in paragraph 2.1.2 are sampled at the rate required in paragraph 2.2.3.1. Continuous sampling from other locations may also be considered provided the sampling rate is complied with.

### 2.2 Component requirements

#### 2.2.1 *Gas sampling lines*

2.2.1.1 Common sampling lines to the detection equipment shall not be fitted, except the lines serving each pair of sampling points as required in paragraph 2.2.1.3.

2.2.1.2 The materials of construction and the dimensions of gas sampling lines shall be such as to prevent restriction. Where non-metallic materials are used, they shall be electrically conductive. The gas sampling lines shall not be made of aluminum.

[1] Refer to the Guidelines for the design, construction and testing of fixed hydrocarbon gas detection system to be developed by the Organization.

2.2.1.3 The configuration of gas sampling lines shall be adapted to the design and size of each space. Except as provided in paragraphs 2.2.1.4 and 2.2.1.5, the sampling system shall allow for a minimum of two hydrocarbon gas sampling points, one located on the lower and one on the upper part where sampling is required. When required, the upper gas sampling point shall not be located lower than 1 m from the tank top. The position of the lower located gas sampling point shall be above the height of the girder of bottom shell plating but at least 0.5 m from the bottom of the tank and it shall be provided with means to be closed when clogged. In positioning the fixed sampling points, due regard should also be given to the density of vapours of the oil products intended to be transported and the dilution from space purging or ventilation.

2.2.1.4 For ships with deadweight of less than 50,000 dwt, the Administration may allow the installation of one sampling location for each tank for practical and/or operational reasons.

2.2.1.5 For ballast tanks in the double bottom, ballast tanks not intended to be partially filled and void spaces, the upper gas sampling point is not required.

2.2.1.6 Means shall be provided to prevent gas sampling lines from clogging when tanks are ballasted by using compressed air flushing to clean the line after switching from ballast to cargo loaded mode. The system shall have an alarm to indicate if the gas sampling lines are clogged.

**2.2.2** ***Gas analysis unit***

2.2.2.1 The gas analysis unit shall be located in a safe space and may be located in areas outside the ship's cargo area; for example, in the cargo control room and/or navigation bridge in addition to the hydraulic room when mounted on the forward bulkhead, provided the following requirements are observed:

.1 sampling lines shall not run through gas safe spaces, except where permitted under paragraph 5.7.2.3.5;

.2 the hydrocarbon gas sampling pipes shall be equipped with flame arresters. Sample hydrocarbon gas is to be led to the atmosphere with outlets arranged in a safe location, not close to a source of ignitions and not close to the accommodation area air intakes;

.3 a manual isolating valve, which shall be easily accessible for operation and maintenance, shall be fitted in each of the sampling lines at the bulkhead on the gas safe side;

.4 the hydrocarbon gas detection equipment including sample piping, sample pumps, solenoids, analysing units etc., shall be located in a reasonably gas-tight cabinet (e.g., fully enclosed steel cabinet with a door with gaskets) which is to be monitored by its own sampling point. At a gas concentration above 30% of the lower flammable limit inside the steel enclosure the entire gas analysing unit is to be automatically shut down; and

.5 where the enclosure cannot be arranged directly on the bulkhead, sample pipes shall be of steel or other equivalent material and without detachable connections, except for the connection points for isolating valves at the bulkhead and analysing unit, and are to be routed on their shortest ways.

**2.2.3** ***Gas detection equipment***

2.2.3.1 The gas detection equipment shall be designed to sample and analyse from each sampling point, sequentially at intervals not exceeding 30 min.

2.2.3.2 Means shall be provided to enable measurements with portable instruments, in case the fixed system is out of order or for system calibration. In case the system is out of order, procedures shall be in place to continue to monitor the atmosphere with portable instruments and to record the measurement results.

2.2.3.3 Audible and visual alarms are to be initiated in the cargo control room, navigating bridge and at the analysing unit when the vapour concentration in a given space reaches a pre-set value, which shall not be higher than the equivalent of 30% of the lower flammable limit.

2.2.3.4 The gas detection equipment shall be so designed that it may readily be tested and calibrated."

***

# ANNEX 21

## PROPOSED REVISED WORK PROGRAMME OF THE SUB-COMMITTEE AND PROVISIONAL AGENDA FOR FP 54

### PROPOSED REVISED WORK PROGRAMME OF THE SUB-COMMITTEE

| | | Target completion date/number of sessions needed for completion | Reference |
|---|---|---|---|
| 1 | **Analysis of fire casualty records**<br>*Strategic direction: 12.1*<br>*High-level action: 12.1.2*<br>*Planned output: 12.1.2.1 to .2* | Continuous | MSC 75/24, paragraph 22.18;<br>~~FP 52/21, section 15~~<br>FP 53/23, section 19 |
| 2 | **Consideration of IACS unified interpretations**<br>*Strategic direction: 1.1*<br>*High-level action: 1.1.2*<br>*Planned output: 1.1.2.1* | Continuous | MSC 78/26, paragraph 22.12;<br>~~FP 52/21, section 12~~<br>FP 53/23, section 12 |
| H.1 | **Performance testing and approval standards for fire safety systems**<br>*Strategic direction: 2*<br>*High-level action: 2.1.1*<br>*Planned output: 2.1.1.2* | 2011 | MSC 74/24, paragraph 21.12;<br>~~FP 52/21, section 3;~~<br>MSC 85/26, paragraph 23.11;<br>FP 53/23, section 3 |
| H.2 | **Comprehensive review of the Fire Test Procedures Code**<br>*Strategic direction: 2*<br>*High-level action: 2.1.1*<br>*Planned output: 2.1.1.1* | ~~2009~~ 2010 | MSC 80/24, paragraph 21.11;<br>~~FP 52/21, section 4~~<br>FP 53/23, section 4 |
| ~~H.3~~ | ~~**Development of provisions for gas-fuelled ships** (coordinated by BLG)~~<br>~~*Strategic direction: 5.2*~~<br>~~*High-level action: 5.2.1*~~<br>~~*Planned output: 5.2.1.1*~~ | ~~2009~~ | ~~MSC 78/26, paragraph 24.19;~~<br>~~FP 52/21, section 11~~ |

**Notes:** 1 "H" means a high priority item and "L" means a low priority item. However, within the high and low priority groups, items have not been listed in any order of priority.
2 Struck-out text indicates proposed deletions and the shaded text shows proposed additions or changes.
3 Items printed in bold letters have been selected for the provisional agenda for FP 54 shown in annex 2.

| | | Target completion date/number of sessions needed for completion | Reference |
|---|---|---|---|
| ~~H.4~~ | ~~**Measures to prevent fires in engine-rooms and cargo pump-rooms**~~<br>~~*Strategic direction: 2*~~<br>~~*High-level action: 2.1.1*~~<br>~~*Planned output: 2.1.1.2*~~ | ~~2009~~ | ~~MSC 79/23, paragraph 20.11; FP 52/21, section 6~~ |
| ~~H.5~~<br>H.3 | **Fire resistance of ventilation ducts**<br>*Strategic direction: 5.2*<br>*High-level action: 5.2.1*<br>*Planned output: 5.2.1.1* | ~~2009~~ 2010 | MSC 81/25, paragraph 23.13;<br>MSC 83/28, paragraph 25.22;<br>FP 53/23, section 6 |
| ~~H.6~~<br>H.4 | **Fixed hydrocarbon gas detection systems on double-hull oil tankers**<br>(in cooperation with BLG, as necessary)<br>*Strategic direction: 2*<br>*High-level action: 2.1.1*<br>*Planned output: 2.1.1.1* | 2010 | MSC 82/24, paragraph 21.18;<br>~~FP 52/21, section 13;~~<br>MSC 84/24, paragraph 22.16;<br>FP 53/23, section 13 |
| ~~H.7~~<br>H.5 | **Clarification of SOLAS chapter II-2 requirements regarding interrelation between central control station and safety centre**<br>*Strategic direction: 2*<br>*High-level action: 2.1.1*<br>*Planned output: 2.1.1.2* | ~~2009~~ 2010 | MSC 82/24, paragraph 21.20;<br>~~FP 52/21, section 14;~~<br>FP 53/23, section 8 |
| ~~H.8~~<br>H.6 | **Harmonization of the requirements for the location of entrances, air inlets and openings in the superstructures of tankers**<br>(in cooperation with BLG, as necessary)<br>*Strategic direction: 5.2*<br>*High-level action: 5.2.1*<br>*Planned output: -* | 2010 | MSC 83/28, paragraph 25.24.2;<br>~~FP 52/21, paragraph 16.1;~~<br>FP 53/23, section 14 |
| ~~H.9~~<br>H.7 | **Amendments to SOLAS chapter II-2 related to the releasing controls and means of escape for spaces protected by fixed carbon dioxide systems**<br>*Strategic direction: 5.2*<br>*High-level action: 5.2.1*<br>*Planned output: -* | 2010 | MSC 83/28, paragraph 25.24.1;<br>~~FP 52/21, paragraph 16.1;~~<br>FP 53/23, section 15 |

| | | Target completion date/number of sessions needed for completion | Reference |
|---|---|---|---|
| ~~H.10~~ | ~~**Guidelines for drainage systems in closed vehicle and ro-ro spaces and special category spaces**~~<br>~~(in cooperation with SLF)~~<br>~~*Strategic direction: 5.1*~~<br>~~*High-level action: 5.1.1*~~<br>~~*Planned output: 5.1.1.2*~~ | ~~2009~~ | ~~MSC 83/28, paragraph 25.20; FP 52/21, paragraph 18.5~~ |
| ~~H.11~~<br>H.8 | **Review of fire protection requirements for on-deck cargo areas** (in cooperation with DSC, as necessary)<br>*Strategic direction: 5.1*<br>*High-level action: 5.1.1*<br>*Planned output: -* | 2011 | MSC 83/28, paragraph 25.21; ~~FP 52/21, paragraph 16.1;~~ FP 53/23, section 17 |
| ~~H.12~~<br>H.9 | **Means of escape from machinery spaces**<br>*Strategic direction: 5.2*<br>*High-level action: 5.2.1*<br>*Planned output: -* | 2010 | MSC 83/28, paragraph 25.23; ~~FP 52/21, paragraph 16.1;~~ FP 53/23, section 16 |
| ~~H.13~~<br>H.10 | **Measures to prevent explosions on oil and chemical tankers transporting low-flash point cargoes** (in cooperation with BLG and DE, as necessary)<br>*Strategic direction: 5.2*<br>*High-level action: 5.2.3*<br>*Planned output: 5.2.3.4* | ~~2009~~ 2011 | FP 51/19, paragraph 10.8; MSC 83/28, paragraph 9.26; ~~FP 52/21, section 20;~~ FP 53/23, section 15 |
| ~~H.14~~<br>H.11 | **Recommendation on evacuation analysis for new and existing passenger ships**<br>*Strategic direction: 5.1*<br>*High-level action: 5.1.1*<br>*Planned output: 5.1.1.1* | 2010 | MSC 73/21, paragraph 4.16; MSC 83/28, paragraph 8.7; ~~FP 52/21, section 19;~~ FP 53/23, section 9 |

| | | Target completion date/number of sessions needed for completion | Reference |
|---|---|---|---|
| ~~H.15~~ H.12 | **Explanatory notes for the application of the safe return to port requirements** (in cooperation with DE and SLF, as necessary)<br>*Strategic direction:* *5.1*<br>*High-level action:* *5.1.1*<br>*Planned output:* - | 2010 | MSC 84/24, paragraph 22.15; FP 53/23, section 18 |
| ~~H.16~~ H.13 | Safety provisions applicable to tenders operating from passenger ships (coordinated by DE)<br>*Strategic direction:* *5.2*<br>*High-level action:* *5.2.1*<br>*Planned output:* - | 3 sessions | MSC 84/24, paragraph 22.14 |
| ~~H.17~~ H.14 | **Fire integrity of bulkheads and decks of ro-ro spaces on passenger and cargo ships**<br>*Strategic direction:* *5*<br>*High-level action:* *5.2.1*<br>*Planned output:* - | ~~2 sessions~~ 2011 | MSC 85/26, paragraph 23.12 |
| ~~H.18~~ H.15 | **Requirements for ships carrying hydrogen and compressed natural gas vehicles**<br>*Strategic direction:* *2*<br>*High-level action:* *2.1.1*<br>*Planned output:* - | ~~2 sessions~~ 2011 | MSC 85/26, paragraph 23.13 |
| ~~H.19~~ H.16 | **Revision of the Recommendations for entering enclosed spaces aboard ships** (co-ordinated by DSC)<br>*Strategic direction:* *5.2*<br>*High-level action:* *5.2.3*<br>*Planned output:* - | 2010 | MSC 85/26, paragraph 23.10 |
| L.1 | Smoke control and ventilation<br>*Strategic direction:* *5.2*<br>*High-level action:* *5.2.1*<br>*Planned output:* - | 2 sessions | FP 39/19, section 9; FP 46/16, section 4 |

## DRAFT PROVISIONAL AGENDA FOR FP 54*

Opening of the session

1 Adoption of the agenda

2 Decisions of other IMO bodies

3 Performance testing and approval standards for fire safety systems

4 Comprehensive review of the Fire Test Procedures Code

5 Fire resistance of ventilation ducts

6 Measures to prevent explosions on oil and chemical tankers transporting low-flash point cargoes

7 Clarification of SOLAS chapter II-2 requirements regarding interrelation between central control station and safety centre

8 Explanatory notes for the application of the safe return to port requirements

9 Recommendation on evacuation analysis for new and existing passenger ships

10 Consideration of IACS unified interpretations

11 Fixed hydrocarbon gas detection systems on double-hull oil tankers

12 Harmonization of the requirements for the location of entrances, air inlets and openings in the superstructures of tankers

13 Amendments to SOLAS chapter II-2 related to the releasing controls and means of escape for spaces protected by fixed carbon dioxide systems

14 Means of escape from machinery spaces

15 Review of fire protection requirements for on-deck cargo areas

16 Analysis of fire casualty records

17 Revision of the Recommendations for entering enclosed spaces aboard ships

18 Fire integrity of bulkheads and decks of ro-ro spaces on passenger and cargo ships

19 Requirements for ships carrying hydrogen and compressed natural gas vehicles

20 Work programme and agenda for FP 55

---

* Agenda item numbers do not necessarily indicate priority.

21 Election of Chairman and Vice-Chairman for 2011

22 Any other business

23 Report to the Maritime Safety Committee

***

# ANNEX 22

## STATUS OF THE PLANNED OUTPUTS OF THE HIGH-LEVEL ACTION PLAN OF THE ORGANIZATION AND PRIORITIES FOR THE 2008-2009 BIENNIUM RELATING TO THE SUB-COMMITTEE'S WORK*

| Strategic Directions (SDs) (A.989(25)) | | | | High-level Actions (HLAs) | | Planned outputs for 2008-2009 | |
|---|---|---|---|---|---|---|---|
| ENHANCING THE STATUS AND EFFECTIVENESS OF IMO | | | | | | | |
| 1 | IMO is the primary international forum for technical matters of all kinds affecting international shipping and legal matters related thereto. An inclusive and comprehensive approach to such matters will be a hallmark of IMO. In order to maintain that primacy, it will: | 1.1 | Further develop its role in maritime affairs *vis-à-vis* other intergovernmental organizations, so as to be able to deal effectively and comprehensively with complex cross-agency issues | 1.1.2 | Co-operate with the United Nations and other international bodies on matters of mutual interest | 1.1.2.1 | Co-operation with:<br>– IACS: consideration of unified interpretations<br>**Status: Continuous. This is a continuous item on the agenda of the Sub-Committee** |
| 2 | IMO will foster global compliance with its instruments governing international shipping and will promote their uniform implementation by Member States | | | 2.1.1 | Monitor and improve conventions, etc., and provide interpretation thereof if requested by Member States | 2.1.1.1 | New or amended mandatory IMO instruments:<br>Safety and security topics (MSC):<br>– Amendments to SOLAS to require fixed hydrocarbon gas detection systems on double-hull oil tankers<br>**Status: In progress. A drafting group is to be established to progress this item at FP 54**<br>– Revised Fire Test Procedures Code<br>**Status: In progress. Draft Code forwarded to MSC 86 for approval, in principle** |
| | | | | | | | New or amended non-mandatory IMO instruments:<br>Safety and security topics (MSC):<br>– Guidelines on central control stations and safety centres<br>**Status: In progress. FP 53 established a correspondence group to progress this item.**<br>– Guidelines on the number and arrangement of portable fire extinguishers<br>**Status: Completed. MSC 84 approved MSC.1/Circ.1275.**<br>– Guidelines to prevent fires in engine-rooms and cargo pump-rooms<br>**Status: Completed. Draft MSC circular forwarded to MSC 86 for approval.**<br>– Revised performance testing and approval standards for fire safety systems<br>**Status: In progress. FP 53 established a correspondence group to progress this item.** |

* Shaded text refers to new outputs not contained in resolution A.990(25). Table to be updated by the Secretariat after the session for accuracy.

| Strategic Directions (SDs) (A.989(25)) | | | | High-level Actions (HLAs) | | Planned outputs for 2008-2009 | |
|---|---|---|---|---|---|---|---|
| **DEVELOPING AND MAINTAINING A COMPREHENSIVE FRAMEWORK FOR SAFE, SECURE, EFFICIENT AND ENVIRONMENTALLY SOUND SHIPPING** | | | | | | | |
| 5 | IMO's highest priority will be the safety of human life at sea. In particular, greater emphasis will be accorded to: | 5.1 | Ensuring that all systems related to enhancing the safety of human life at sea are adequate, including those concerned with large concentrations of people | 5.1.1 | Review adequacy of passenger ship safety provisions | 5.1.1.1 | New or amended mandatory IMO instruments (MSC):<br>– Recommendation on evacuation analysis for new and existing passenger ships<br>**Status: In progress. FP 53 established a correspondence group to progress this item.**<br>– Standards for the fire safety of external areas of passenger ships<br>**Status: Completed. MSC 84 approved MSC.1/Circ.1274.**<br>– Amendments to SOLAS chapter II-2 concerning on-deck cargo areas<br>**Status: In progress.** |
| | | | | | | 5.1.1.2 | New or amended non-mandatory IMO instruments (MSC):<br>– Guidelines for drainage systems in closed vehicle and ro-ro spaces and special category spaces of passenger ships (see Output 5.2.1.2)<br>**Status: Completed. Draft MSC circular forwarded to MSC 86 for approval.**<br>– Explanatory notes for the application of the safe return to port requirement<br>**Status: In progress.** |
| | | 5.2 | Enhancing technical, operational and safety management standards | 5.2.1 | Keep under review the technical and operational safety aspects of all types of ships, including fishing vessels | 5.2.1.1 | New or amended mandatory IMO instruments (MSC):<br>– Amendments to SOLAS related to the fire resistance of ventilation ducts<br>**Status: In progress. FP 53 established a correspondence group to progress this item.**<br>– Interim guidelines for gas-fuelled engine installations in ships<br>**Status: Completed. Fire safety provisions forwarded to BLG 13.**<br>– Amendments to SOLAS chapter II-2 concerning means of escape from machinery spaces in passenger and cargo ships<br>**Status: In progress.**<br>– Amendments to SOLAS chapter II-2 related to the releasing controls and means of escape for spaces protected by fixed carbon dioxide systems<br>**Status: In progress.** |
| | | | | | | 5.2.1.2 | New or amended non-mandatory IMO instruments (MSC):<br>– Guidelines for drainage systems in closed vehicle and ro-ro spaces and special category spaces for cargo ships (see Output 5.1.1.2)<br>**Status: Completed. Draft MSC circular forwarded to MSC 86 for approval.**<br>– Revised SPS Code (see Output 2.1.1.2 (safety and security topics))<br>**Status: Completed. Forwarded to DE 50 for co-ordination purposes.**<br>– Guidelines on the harmonization of the requirements for the location of entrances, air inlets and openings in the superstructures of tankers<br>**Status: In progress**. |
| | | | | 5.2.3 | Keep under review standards for safe handling and carriage by sea of solid and liquid cargoes carried in bulk and packaged form | 5.2.3.1 | New or amended mandatory IMO instruments:<br>Safety and security topics (MSC):<br>– Application of requirements for dangerous goods in packaged form in SOLAS and the 2000 HSC Code<br>**Status: Completed. Adopted by resolution MSC.271(85).** |

| Strategic Directions (SDs) (A.989(25)) | | | | High-level Actions (HLAs) | | Planned outputs for 2008-2009 | |
|---|---|---|---|---|---|---|---|
| | | | | | | 5.2.3.4 | Measures to prevent fires and explosions on chemical tankers and product tankers under 20,000 deadweight tonnes operating without inert gas systems (MSC)<br>**Status: In progress. Recommendation forwarded to MSC 86 for endorsement.** |
| *The related performance indicators are: 4(b), 5(b), 6, 7, 8, 10, 11, 14 and 17(b)* | | | | | | | |
| 12 | IMO will take the lead in enhancing the quality of shipping by: | 12.1 | Encouraging the utilization of the best available techniques not entailing excessive costs, in all aspects of shipping | 12.1.2 | Use risk-based tools that take account of costs and the human element in the development of operational standards | 12.1.2.2 | A casualty analysis process effectively implemented and monitored (MSC)<br>**Status: Continuous. The FP Sub-Committee considers the analysis of fire casualty records as requested.** |