INTERNATIONAL MARITIME ORGANIZATION

IMO

E

SUB-COMMITTEE ON FIRE PROTECTION
51st session
Agenda item 19

FP 51/19
8 March 2007
Original: ENGLISH

REPORT TO THE MARITIME SAFETY COMMITTEE

Table of contents

Section		Page
1	GENERAL	3
2	DECISIONS OF OTHER IMO BODIES	6
3	PERFORMANCE TESTING AND APPROVAL STANDARDS FOR FIRE SAFETY SYSTEMS	6
4	COMPREHENSIVE REVIEW OF THE FIRE TEST PROCEDURES CODE	11
5	RECOMMENDATION ON EVACUATION ANALYSIS FOR NEW AND EXISTING PASSENGER SHIPS	15
6	REVIEW OF THE SPS CODE	17
7	DEVELOPMENT OF PROVISIONS FOR GAS-FUELLED SHIPS	18
8	MEASURES TO PREVENT FIRES IN ENGINE-ROOMS AND CARGO PUMP-ROOMS	19
9	CONSIDERATION OF IACS UNIFIED INTERPRETATIONS	20
10	ANALYSIS OF FIRE CASUALTY RECORDS	23
11	FIRE RESISTANCE OF VENTILATION DUCTS	25
12	APPLICATION OF REQUIREMENTS FOR DANGEROUS GOODS IN SOLAS AND THE 2000 HSC CODE	26
13	UNIFIED INTERPRETATION ON THE NUMBER AND ARRANGEMENT OF PORTABLE EXTINGUISHERS IN ACCOMMODATION SPACES, SERVICE SPACES, CONTROL STATIONS, ETC.	27
14	REVIEW OF FIRE SAFETY OF EXTERNAL AREAS ON PASSENGER SHIPS	28
15	PERFORMANCE STANDARDS FOR FIXED WATER SPRAYING, FIRE DETECTION AND FIRE ALARM SYSTEMS FOR CABIN BALCONIES	29

For reasons of economy, this document is printed in a limited number. Delegates are kindly asked to bring their copies to meetings and not to request additional copies.

16 WORK PROGRAMME AND AGENDA FOR FP 52 31

17 ELECTION OF CHAIRMAN AND VICE-CHAIRMAN FOR 2008 33

18 ANY OTHER BUSINESS 33

19 ACTION REQUESTED OF THE COMMITTEE 34

LIST OF ANNEXES

ANNEX 1 DRAFT MSC CIRCULAR ON AMENDMENTS TO THE REVISED GUIDELINES FOR THE APPROVAL OF EQUIVALENT WATER-BASED FIRE-EXTINGUISHING SYSTEMS FOR MACHINERY SPACES AND CARGO PUMP-ROOMS (MSC/CIRC.1165)

ANNEX 2 DRAFT AMENDMENTS TO SOLAS REGULATION II-2/10

ANNEX 3 JUSTIFICATION FOR THE PROPOSAL FOR A NEW WORK PROGRAMME ITEM

ANNEX 4 DRAFT MSC RESOLUTION ON AMENDMENTS TO THE REVISED GUIDELINES FOR APPROVAL OF SPRINKLER SYSTEMS EQUIVALENT TO THAT REFERRED TO IN SOLAS REGULATION II-2/12 (RESOLUTION A.800(19))

ANNEX 5 DRAFT MSC CIRCULAR ON GUIDELINES FOR EVACUATION ANALYSIS FOR NEW AND EXISTING PASSENGER SHIPS

ANNEX 6 JUSTIFICATION FOR THE PROPOSAL FOR A NEW WORK PROGRAMME ITEM

ANNEX 7 DRAFT MSC CIRCULAR ON UNIFIED INTERPRETATIONS OF SOLAS CHAPTER II-2

ANNEX 8 DRAFT MSC CIRCULAR ON UNIFIED INTERPRETATION OF THE INTERNATIONAL FIRE SAFETY SYSTEMS CODE

ANNEX 9 DRAFT MSC CIRCULAR ON UNIFIED INTERPRETATION OF THE INTERNATIONAL BULK CHEMICALS CODE

ANNEX 10 DRAFT MSC CIRCULAR ON GUIDELINES FOR THE APPROVAL OF FIXED PRESSURE WATER-SPRAYING AND WATER-BASED FIRE-EXTINGUISHING SYSTEMS FOR CABIN BALCONIES

ANNEX 11 DRAFT MSC CIRCULAR ON GUIDELINES FOR THE APPROVAL OF FIXED FIRE DETECTION AND FIRE ALARM SYSTEMS FOR CABIN BALCONIES

ANNEX 12 PROPOSED REVISED WORK PROGRAMME OF THE SUB-COMMITTEE AND PROVISIONAL AGENDA FOR FP 52

1 GENERAL

Introduction

1.1 The Sub-Committee held its fifty-first session from 5 to 9 February 2007 under the chairmanship of Mr. J.C. Cubisino (Argentina). The Vice-Chairman, Mr. C. Abbate (Italy), was also present.

1.2 The session was attended by delegations from the following Member Governments:

ALGERIA
ARGENTINA
BAHAMAS
BELGIUM
BRAZIL
CHILE
CHINA
COLOMBIA
CROATIA
CUBA
CYPRUS
DENMARK
DOMINICAN REPUBLIC
ECUADOR
EGYPT
FINLAND
FRANCE
GERMANY
GREECE
ICELAND
INDONESIA
IRAN (ISLAMIC REPUBLIC OF)
IRELAND
ITALY
JAPAN
LATVIA
LIBERIA
MALAYSIA
MALTA
MARSHALL ISLANDS
MEXICO
MOROCCO
NETHERLANDS
NORWAY
PANAMA
PAPUA NEW GUINEA
PERU
PHILIPPINES
POLAND
REPUBLIC OF KOREA
ROMANIA
RUSSIAN FEDERATION
SAUDI ARABIA
SINGAPORE
SPAIN
SWEDEN
SYRIAN ARAB REPUBLIC
TURKEY
TUVALU
UNITED KINGDOM
UNITED STATES
URUGUAY
VENEZUELA

the following Associate Member of IMO:

HONG KONG, CHINA

and the following State not Member of IMO:

COOK ISLANDS

1.3 The session was also attended by an observer from the following intergovernmental organization:

EUROPEAN COMMISSION (EC)

and by observers from the following non-governmental organizations in consultative status:

INTERNATIONAL CHAMBER OF SHIPPING (ICS)
INTERNATIONAL ORGANIZATION FOR STANDARDIZATION (ISO)
INTERNATIONAL CONFEDERATION OF FREE TRADE UNIONS (ICFTU)
INTERNATIONAL RADIO MARITIME COMMITTEE (CIRM)
INTERNATIONAL ASSOCIATION OF PORTS AND HARBORS (IAPH)
INTERNATIONAL ASSOCIATION OF CLASSIFICATION SOCIETIES (IACS)
OIL COMPANIES INTERNATIONAL MARINE FORUM (OCIMF)
INTERNATIONAL FEDERATION OF SHIPMASTERS' ASSOCIATION (IFSMA)
INTERNATIONAL ASSOCIATION OF INDEPENDENT TANKER OWNERS (INTERTANKO)
CRUISE LINES INTERNATIONAL ASSOCIATION (CLIA)
INTERNATIONAL ASSOCIATION OF DRY CARGO SHIPOWNERS (INTERCARGO)
INTERNATIONAL PARCEL TANKERS ASSOCIATION (IPTA)
THE ROYAL INSTITUTION OF NAVAL ARCHITECTS (RINA)

Secretary-General's opening address

1.4 In welcoming the participants on behalf of the Secretary-General, Mr. K. Sekimizu, the Director of the Maritime Safety Division, emphasized that holding this session of the Sub-Committee at the Royal Horticultural Halls is, indeed, a challenge while the Headquarters building is undergoing refurbishment and, having appreciated the understanding, co-operation and efforts of IMO staff and having assured the Sub-Committee that the Secretariat would do its best in providing all services needed, wished the meeting to be both successful and enjoyable.

Referring to this year's theme for World Maritime Day: "IMO's response to current environmental challenges", the Director pointed out that this theme provided an opportunity to show that the maritime sector did care about the environment and was, indeed, in the forefront of this challenge. In this context, he emphasized that IMO had adopted a wide range of measures to prevent and control any pollution caused by ships which were all positive proof of the firm determination of Governments and the industry to reduce to the barest minimum the impact that shipping might have on the fragile environment. Having mentioned that the public's image of shipping and negative views of the industry and its regulators, following accidents that cause pollution, was unfair, he conveyed the Secretary-General's call to all concerned to work together on several fronts to counter-balance such views through a determined proactive approach to environmental issues.

Recalling the adoption, by MSC 82, of the amendments to SOLAS chapter II-2 and the International Code for Fire Safety Systems related to the passenger ship safety initiative, including the amendments concerning the fire safety of cabin balconies, he emphasized that these were important achievements in endeavours to provide up-to-date fire safety standards for passenger ships and expressed his confidence that they would provide a regulatory framework that will help shipowners, operators and designers to meet any challenges the future may bring.

Turning to the Sub-Committee's work on the comprehensive review of the performance testing and approval standards for fire safety systems, on which the Sub-Committee has been working diligently since 2002 to harmonize all of the relevant standards so far adopted by the Organization, the Director stressed that the completion of this work is essential to ensure the

smooth implementation of the revised SOLAS chapter II-2 and for the harmonization of the many performance standards related to fire safety systems. He urged the Sub-Committee to give high priority to this work, in particular to the finalization of revisions to the Revised Guidelines for the approval of equivalent fixed gas fire-extinguishing systems, as referred to in SOLAS 74, for machinery spaces and cargo pump-rooms.

In highlighting the work on the comprehensive review of the Fire Test Procedures Code, aiming at enhancing its user-friendliness and providing a more uniform application of the Code through the inclusion of appropriate interpretations approved by the Committee, he noted that the work would commence in earnest at this session, taking into account the work of the related intersessional correspondence group. In this regard, he emphasized that this work is essential to update the various fire test standards and accommodate developments in fire protection technologies.

Referring to the review of fire safety of external areas on passenger ships and the development of performance standards for fixed water spraying, fire detection and fire alarm systems for cabin balconies, the Director observed that the work on the matter will commence, in the light of a recent fire onboard the passenger ship **Star Princess**. In this context, recalling the adoption by MSC 82 of the amendments to SOLAS chapter II-2 to address the safety of cabin balconies, he stressed the importance of the consequential work to be undertaken to support the aforementioned amendments, which are expected to enter into force on 1 July 2008, to ensure that they will be consistently implemented by the industry. He recalled that the Sub-Committee had been instructed to finalize the aforementioned performance standards for fixed water-spray fire-extinguishing systems as soon as possible and thanked Finland and the United States for undertaking the preliminary full-scale testing to establish a technical basis for the new standards.

In concluding, the Director, on the issue of security, stressed that there should be no complacency about security at any of the various venues where IMO meetings were scheduled to be held during the refurbishment period and appealed to all to abide by the security rules in place and, in particular, circular letter No.2692 and any other *ad hoc* measures that may be necessary; and, with regard to the implementation of the Voluntary IMO Member State Audit Scheme in accordance with resolution A.974(24), updated the Sub-Committee on the audits conducted so far, and requested the support and co-operation of all delegates to the wide and effective implementation of the Scheme.

Chairman's remarks

1.5 In responding, the Chairman thanked the Director of the Maritime Safety Division for his words of encouragement and stated that the Secretary-General's advice and requests would be given every consideration in the deliberations of the Sub-Committee.

Adoption of the agenda and related matters

1.6 The Sub-Committee adopted the agenda (FP 51/1/Rev.1) and agreed to be guided in its work, in general, by the annotations contained in document FP 51/1/1. The agenda, as adopted, with the list of documents considered under each agenda item, is set out in document FP 51/INF.4.

2 DECISIONS OF OTHER IMO BODIES

General

2.1 The Sub-Committee noted the decisions and comments pertaining to its work made by STW 37, DE 49, COMSAR 10, BLG 10, MSC 81, NAV 52, SLF 49, DSC 11, MEPC 55 and MSC 82, as reported in documents FP 51/2, FP 51/2/1 and FP 51/2/2, and took them into account in its deliberations when dealing with relevant agenda items.

Commencement of working groups on Monday morning

2.2 The Sub-Committee noted that MSC 81 had reaffirmed that the commencement of working groups on Monday morning is an option that should be decided at the meeting with caution. However, it should be encouraged that, whenever possible, terms of reference of working groups should be agreed at the previous sessions of the Sub-Committee. Another option would be to issue the draft terms of reference of working and drafting groups at the beginning of the session, provided clear instructions are given to the groups on whether or not to begin work on Monday morning, without prior consideration of the related agenda items in plenary.

Splinter groups

2.3 The Sub-Committee noted that MSC 81 had agreed that there should be no official splinter groups. However, where the establishment of a splinter group is necessary for the facilitation and efficiency of the work, there should be a unanimous agreement on its establishment and the outcome of the group's work should be considered and agreed by the Sub-Committee and incorporated in the report, as appropriate.

Increase in volume of documents

2.4 The Sub-Committee noted that MSC 81, in considering that the volume of documents had increased compared to previous sessions, had requested Member Governments and international organizations to submit documents as early as possible and not just on the deadlines for submission of documents.

Revised Guidelines on the organization and method of work

2.5 The Sub-Committee noted that MSC 82, having approved amendments to the Guidelines on the organization and method of work, requested the Secretariat to prepare and circulate the revised Guidelines, incorporating the aforementioned amendments which have been disseminated by means of MSC-MEPC.1/Circ.1.

3 PERFORMANCE TESTING AND APPROVAL STANDARDS FOR FIRE SAFETY SYSTEMS

General

3.1 The Sub-Committee recalled that, at FP 46, it had agreed to harmonize all of the fire testing and approval standards for fire safety systems adopted by the Organization for inclusion into a revised International Code for Fire Safety Systems (FSS Code).

3.2 The Sub-Committee also recalled that, at FP 50, the Sub-Committee continued work on the short-term tasks set out in annex 6 to document FP 50/WP.2 and had finalized the draft amendments to chapters 4, 6 and 7 of the FSS Code, which were approved at MSC 81 and subsequently adopted at MSC 82.

3.3 The Sub-Committee further recalled that FP 50 had re-established the Correspondence Group on Performance Testing and Approval Standards for Fire Safety Systems with the terms of reference, set out in paragraph 4.27 of document FP 50/21, and instructed the group to submit a report to FP 51.

3.4 The Sub-Committee noted that MSC 81, in considering the outcome of the work on matters related to the safety of cabin balconies on passenger ships, had instructed the aforementioned correspondence group to consider matters related to fixed fire-extinguishing systems for cabin balconies (see also section 15).

3.5 The Sub-Committee had for its consideration under this agenda item documents submitted by China (FP 51/3/6 and FP 51/3/7), Denmark (FP 51/3/3), Japan (FP 51/3/5), the Republic of Korea (FP 51/3/4 and FP 51/INF.3), the United Kingdom (FP 51/3/2/Rev.1) and the United States (FP 51/3 and FP 51/3/1).

Report of the working group (part 2) established at FP 50

3.6 The Sub-Committee considered part 2 of the report of the Working Group on Performance Testing and Approval Standards for Fire Safety Systems established at FP 50 (FP 51/3) together with document FP 51/3/5 (Japan) and, having approved it in general, instructed the working group, referred to in paragraph 3.12, to further consider the matters related to the maintenance and inspections of fixed carbon dioxide systems.

Report of the correspondence group

3.7 The Sub-Committee considered the report of the Correspondence Group on Performance Testing and Approval Standards for Fire Safety Systems (FP 51/3/1) together with the documents referred to in paragraph 3.5 and, having approved it in general, instructed the working group to further consider the aforementioned matters in detail.

3.8 The Sub-Committee agreed to consider matters related to the Guidelines for fixed pressure water-spraying fire-extinguishing systems and fixed fire detection and fire alarm systems for cabin balconies under agenda item 15 (Performance standards for fixed water spraying, fire detection and fire alarm systems for cabin balconies) (see also paragraph 15.2).

Capacity of spare breathing air for the breathing apparatus on passenger ships

3.9 In considering document FP 51/3/3 (Denmark), containing proposed amendments to chapter 3 of the FSS Code, related to the capacity of spare breathing air for the breathing apparatus required in SOLAS regulation II-2/10.10.2.5, and proposing that a breathing air compressor be fitted on passenger ships carrying more than 36 passengers, the Sub-Committee noted that this issue would be considered under the long-term priority items identified by the working group at FP 50, as set out in annex 6 to document FP 50/WP.2, and instructed the working group to consider the above document.

Performance tests for emergency fire pumps

3.10 The Sub-Committee noted the information contained in document FP 51/INF.3 (Republic of Korea), regarding an experiment performed to verify the pumping capability of emergency fire pumps for cases where the open end of a suction pipe is exposed to air for a short time. The result of the experiment concluded that the open end of suction pipes for emergency fire pumps should be placed below the waterline.

3.11 In this regard, the Sub-Committee noted that this matter would be further considered under agenda item 9 (Consideration of IACS unified interpretations) when considering document FP 51/9/9 (IACS) (see paragraph 9.15).

Establishment of the working group

3.12 Recalling its relevant decision at FP 50 regarding a working group, the Sub-Committee, recognizing the necessity to make progress on this item, established the Working Group on Performance Testing and Approval Standards and, taking into account the comments and decisions made in plenary, instructed it to:

.1 finalize the short-term priorities identified in annex 12 to document FP 51/3/1, taking into account documents FP 51/3, FP 51/3/1, FP 51/3/2/Rev.1, FP 51/3/4 and FP 51/3/5;

.2 continue work on the medium- and long-term priorities identified in annex 6 to document FP 50/WP.2, taking into account documents FP 51/3, FP 51/3/1, FP 51/3/3, FP 51/3/5, FP 51/3/6 and FP 51/INF.3, and make recommendations as appropriate;

.3 update the Revised plan for the harmonization, or new development of, performance testing and approval standards for fire safety systems contained in annex 6 to document FP 50/WP.2, taking into account the progress made to date, and prepare a revised plan identifying the priorities, timeframes and objectives for each category; and

.4 consider whether there is a need to re-establish the correspondence group and, if so, prepare the draft terms of reference for consideration by the Sub-Committee.

Report of the working group

3.13 Having received the report of the working group (FP 51/WP.1), the Sub-Committee approved it in general and took action as outlined hereunder.

Maintenance and inspections of fixed carbon dioxide fire-extinguishing systems

3.14 With regard to the draft Guidelines on maintenance and inspections of fixed carbon dioxide fire-extinguishing systems, the Sub-Committee noted that the group, having considered document FP 51/3 (paragraphs 6 to 8 and annex 1), had prepared modifications to the third sentence of subparagraph 6.2.2 of annex 4 to document FP 50/WP.2 (FP 51/WP.1, paragraph 15), and had also proposed, based on document FP 51/3/5 (paragraph 3), to insert the items listed in annex 1 to document FP 51/3 and paragraph 16 of document FP 51/WP.1.

3.15 Subsequently, the Sub-Committee agreed, in principle, to the aforementioned modifications to the draft Guidelines for maintenance and inspections of fixed carbon dioxide fire-extinguishing systems (FP 50/WP.2, annex 4 and FP 51/3, annex 1). In this regard, the Sub-Committee also agreed that the STW Sub-Committee might need to be invited to comment on the draft Guidelines after finalization.

Revision of MSC/Circ.1165

3.16 The Sub-Committee noted that the group had considered the proposals contained in document FP 50/4/3, concerning Revised Guidelines for the approval of equivalent water-based fire-extinguishing systems for machinery spaces and cargo pump-rooms (MSC/Circ.1165), and had agreed that figures 1, 2 and 3 in the Revised Guidelines did not clearly illustrate the recommended fire test configurations and spray fire locations.

3.17 The Sub-Committee therefore agreed to the draft amendments to the Revised Guidelines for the approval of equivalent water-based fire-extinguishing systems for machinery spaces and cargo pump-rooms (MSC/Circ.1165) and the associated draft MSC circular, as set out in annex 1, for submission to MSC 83 for approval.

Safety of CO_2 fire-extinguishing systems installed before 1 October 1994

3.18 The Sub-Committee noted that the group, following consideration of documents FP 51/3/1 (annexes 9 and 10) and FP 51/3/5 (paragraph 11), had recognized that the existence of many single control systems, more than 20 years after the regulations were changed, presented an unacceptable level of risk to crew personnel.

3.19 In view of the above, the Sub-Committee agreed to the draft amendments to SOLAS regulation II-2/10, to require all carbon dioxide systems to have two separate releasing controls, as set out in annex 2, for submission to MSC 83 for approval and subsequent adoption, taking into account that existing ships will have to comply with the above amendments by completion of the first scheduled dry-docking after 1 July 2009. The delegation of Japan was of the view that, taking into account the cost benefit of the new requirement for the existing vessels and the escape time from the space concerned, the additional release control should not be required for small machinery rooms. The delegation of Greece shared the views of Japan and was of the opinion that the volume of machinery spaces and the manning should also be taken into account.

3.20 The Sub-Committee also prepared a justification for the proposal for a new work programme item, as set out in annex 3, which requested an extended review of safety matters relating to the installation of total flooding carbon dioxide systems, including system discharge control arrangements and criteria for lighting and marking of the means of escape from the protected space.

Revised Guidelines for approval of fixed gas fire-extinguishing systems

3.21 In considering the proposed safe personnel exposure limits applicable to halocarbon and inert gas fire-extinguishing agents contained in document FP 51/3/1 (annex 3), the Sub-Committee noted that there was a split of the opinion concerning the equivalent limit exposure to halocarbon and CO_2 in the group, and that the proposal contained in document FP 51/3/1 (annex 3) had not fully reflected all opinions expressed in the correspondence group.

3.22 Following the discussion, the Sub-Committee, having made editorial modifications, agreed, in principle, to the draft amendments to the Revised Guidelines for the approval of equivalent fixed gas fire-extinguishing systems, as referred to in SOLAS 74, for machinery spaces and cargo pump-rooms (MSC/Circ.848), as set out in annex 6 to document FP 51/WP.1, for further consideration at FP 52.

Fixed aerosol fire-extinguishing systems equivalent to fixed gas systems

3.23 Having considered document FP 51/3/1 (annex 4), the Sub-Committee agreed, in principle, to modifications to the draft amendments to the Guidelines for the approval of fixed aerosol fire-extinguishing systems equivalent to fixed gas fire-extinguishing systems, as referred to in SOLAS 74, for machinery spaces (MSC/Circ.1007), as set out in annex 7 to document FP 51/WP.1. The Sub-Committee noted that the group had agreed that the revised toxicity guidelines in MSC/Circ.848 (see paragraph 3.22) should be amended and should be harmonized with the Guidelines in MSC/Circ.1007.

Sprinkler systems equivalent to that referred to in SOLAS regulation II-2/12

3.24 The Sub-Committee, having noted that the group had further considered editorial modifications to amendments to the Revised Guidelines for approval of sprinkler systems equivalent to that referred to in SOLAS regulation II-2/12 (resolution A.800(19)) included in annex 3 to document FP 50/4, agreed to the draft amendments to the Revised Guidelines for approval of sprinkler systems equivalent to that referred to in SOLAS regulation II-2/12 (resolution A.800(19)) as well as the associated draft MSC resolution, as set out in annex 4, for submission to MSC 83 for adoption.

Revised plan of action

3.25 The Sub-Committee noted that the group had updated the action plan contained in documents FP 50/WP.2 (annex 6) and FP 51/3/1 (annex 12), taking into account the progress made to date, and approved the revised action plan identifying the priorities, timeframes and objectives for each priority category (FP 51/WP.1, annex 9).

Establishment of a correspondence group

3.26 Taking into account the progress made at this session, the Sub-Committee re-established the correspondence group, under the co-ordination of the United States*, to progress the work on this issue and instructed the group (see also paragraphs 3.27 and 18.2), taking into account the relevant information contained in documents FP 51/3/1, FP 51/3/2/Rev.1, FP 51/3/3, FP 51/3/4 and FP 51/3/5 and the outcome of discussion in the working group outlined in part 1 of its report (FP 51/WP.1) and part 2 to be submitted to FP 52, to:

---

* **Co-ordinator**:

Mr. R. Eberly, P.E.
Commandant (CG-3PSE-4)
United States Coast Guard
2100 Second Street, S.W.
Washington, DC 20593-0001
United States of America
Tel: +1 202 372 1393
Fax: +1 202 372 1924
E-mail: Randall.Eberly@uscg.mil

.1 further consider the draft Guidelines for fixed high-expansion foam systems using inside air based on annex 5 to document FP 51/3/1;

.2 further consider the draft Guidelines for the approval of fixed water based fire fighting systems for ro-ro spaces and special category spaces, based on annex 6 to document FP 51/3/1;

.3 further consider the draft amendments to chapter 9 of the FSS Code concerning fixed fire detection and fire alarm systems, based on annex 7 to document FP 51/3/1;

.4 further consider the draft amendments to chapter 10 of the FSS Code concerning sample extraction smoke detection systems, based on annex 8 to document FP 51/3/1;

.5 commence consideration of medium-term priority systems other than topics referred to in the aforementioned subparagraphs and the long-term priority systems; and

.6 submit a report to FP 52.

3.27 The Sub-Committee recalled that the group had been also instructed, under agenda item 18, to develop unified interpretation on categorization and fire safety measures for "pipe trunk" arrangements, taking into account document FP 51/18/2 (see paragraph 18.2).

4 COMPREHENSIVE REVIEW OF THE FIRE TEST PROCEDURES CODE

General

4.1 The Sub-Committee recalled that MSC 80, following consideration of document MSC 80/21/5, in which Japan proposed to review and revise, as necessary, the Fire Test Procedures Code (FTP Code), had agreed to include, in the Sub-Committee's work programme and the provisional agenda for FP 50, a high priority item on "Comprehensive review on the Fire Test Procedures Code", with a target completion date of 2008.

4.2 It was also recalled that FP 50, in considering how to proceed with the comprehensive review of the FTP Code, had agreed to establish a working group for this subject at FP 51 and a correspondence group to progress work on comprehensive review of the Code.

Report of the correspondence group

4.3 The Sub-Committee considered the report of the Correspondence Group on Comprehensive Review on the Fire Test Procedures Code (FP 51/4 to FP 51/4/11) together with documents FP 51/4/12 to FP 51/4/15 (Japan) and, having approved the report in general, agreed that the above documents should be forwarded to the working group for detailed consideration, taking into account the comments made in plenary.

IACS unified interpretation on the testing of fire doors

4.4 In considering document FP 51/9/2 (IACS), containing a revision to IACS unified interpretation FTP 3 (FTP Code and resolution A.754(18)) that establishes criteria for approving fire doors having dimensions larger than the relevant prototype tested in accordance with the

FTP Code, the Sub-Committee agreed to refer the aforementioned document to the working group for further consideration, taking into account the comments by the delegation of Germany that there should be no clearance of doors at all under test conditions, however, where this is not possible, the clearance should be as small as possible (see paragraph 4.9).

Establishment of the working group

4.5 Recalling its relevant decision at FP 50 regarding a working group, the Sub-Committee, recognizing the necessity to make progress on this item, established the Working Group on Comprehensive Review on the Fire Test Procedures Code and, taking into account the comments and decisions made in plenary, instructed it to:

.1 further consider the report of the correspondence group (FP 51/4) and the draft revised FTP Code, taking into account documents FP 51/4/12, FP 51/4/13, FP 51/4/14 and FP 51/4/15 (Japan), using as a basis the draft text contained in documents FP 51/4/1, FP 51/4/2, FP 51/4/3, FP 51/4/4, FP 51/4/5, FP 51/4/6, FP 51/4/7, FP 51/4/8, FP 51/4/9, FP 51/4/10, FP 51/4/11, FP 51/9/2 and FP 50/11/6, with a view to further developing the draft revised FTP Code;

.2 prepare an action plan identifying the priorities and timeframes for the work to be undertaken as part of the comprehensive review; and

.3 consider whether there is a need to re-establish the correspondence group and, if so, prepare the draft terms of reference for consideration by the Sub-Committee.

Report of the working group

4.6 Having received the report of the working group (FP 51/WP.2), the Sub-Committee approved it in general and took action as outlined hereunder.

Introduction of ISO standards in the FTP Code

4.7 The Sub-Committee agreed that related ISO standards should be incorporated by reference into the revised FTP Code to make it more user-friendly. In particular, the specification of a test apparatus and its calibration method should refer to the related ISO standard, but such specifications should not be copied into the revised Code. Specifications for test specimens, including conditioning procedures, test procedures, method of analysis/evaluation of test results and performance criteria, should be specified in the revised Code. In this regard, the Sub-Committee agreed that the year of publication should be included in any referenced ISO standards. The Sub-Committee noted that members of ISO/TC 92 and ISO/TC 8 had been participating in the work of the correspondence group.

Synthetic rubber pipes

4.8 Regarding the proposal (FP 50/10) that the test procedures defined in the Guidelines for the application of plastic pipes on ships (resolution A.753(18)) should also be made applicable to synthetic rubber pipes and should be changed to refer to "pipes of a synthetic material" or similar throughout, the Sub-Committee agreed that the test procedures contained in the Guidelines should be amended to accommodate fire safety requirements for synthetic rubber pipes and instructed the correspondence group referred to in paragraph 4.17 accordingly.

Performance criteria for fire doors

4.9 The Sub-Committee noted that the correspondence group had discussed performance criteria for fire doors (FP 49/WP.7 and FP 50/9), in particular that the draft amendments to the Recommendation on fire resistance tests for "A", "B" and "F" class divisions (resolution A.754(18)) should take into account the sill integrity criteria of fire doors (i.e., to expand the doorsill clearance). The Sub-Committee agreed that for doors with four-sided frames the existing fire door criteria were sufficient. For doors with three-sided frames, there was general agreement with the proposal and the Sub-Committee decided that additional requirements for a relevant testing scheme and criteria should be developed within the draft revised FTP Code. The Sub-Committee agreed that provisions for the control of the installation of such doors should be developed as a separate SOLAS regulation and instructed the correspondence group referred to in paragraph 4.17 accordingly.

Surface flammability test for mastics and sealants

4.10 Regarding the proposal (FP 48/15 and FP 49/6) to amend the test procedure for the preparation of specimens of sealants and mastics for the surface flammability tests, the Sub-Committee agreed that it was not necessary to require mastics and sealants to be low-flame spread as long as they are not component parts of "A" and "B" class divisions and, therefore, no tests were necessary. Mastics and sealants would fall under additional combustibles and should be controlled by the limitation of the volume of combustible materials.

Fluxmeter calibration

4.11 The Sub-Committee noted that a standard scheme for heat fluxmeter calibration, by which every heat fluxmeter should be calibrated within three steps of comparison to the reference heat fluxmeter, was currently being developed. The Sub-Committee agreed on the importance of such development for the purpose of Parts 2, 3, 5 and 10 of the draft revised FTP Code. Noting further ISO's work on the 14934 series of standards for heat fluxmeters, the Sub-Committee agreed that ISO/TC 92/SC1 should be invited to establish a standard scheme in conjunction with the ISO 14934 series as a matter of urgency and instructed the Secretariat to communicate with ISO accordingly.

Large fire doors

4.12 The Sub-Committee noted that the group had discussed the testing of large fire doors when considering the relevant provisions in Appendix 1 of Part 3 of the FTP Code, in connection with document FP 51/9/2, containing IACS' Unified Interpretation (UI) FTP 3 on the issue. The Sub-Committee agreed, in principle, that if such doors fit the furnace, then the largest possible size door, as determined by the Administration, preferably with a standard furnace as prescribed by resolution A.754(18), should be tested individually; and, if they are larger than the furnace, then an engineering assessment should be carried out. The Sub-Committee noted that the group could not agree with the first part of the UI, which would approve doors larger than those tested (up to 15% higher/wider or 10% larger in area) without any clear explanation of the term "comfortable margins". In this respect, the observer from IACS pointed out that the 15% and 10% figures were based on practicality and should, therefore, be accepted before the engineering assessment is carried out.

4.13 The Sub-Committee noted that the group had agreed, however, with the second part of the UI, for doors having larger dimensions than the standard test furnace, provided that the test was conducted on a mock-up door having the largest possible size for a standard furnace in accordance with resolution A.754(18) and including the same dimensions of components such as frame, profile, thickness of insulation, hinges and latches. Such doors should be tested when installed in a prototype bulkhead. It was agreed that a correspondence group should develop relevant text for an interpretation of Part 3 of Annex 1 of the FTP Code, taking into account the IACS UI (see paragraph 4.15) for further consideration at FP 52 and invited Member Governments and international organizations to submit relevant comments to that session (see paragraph 4.17).

Text of the FTP Code

4.14 The Sub-Committee noted that the group had considered the text of the draft revised FTP Code as prepared by the correspondence group (FP 50/4/1 to FP 50/4/11) and agreed that the correspondence group referred to in paragraph 4.17 should take into account the comments set out in paragraph 11 of document FP 51/WP.2 when developing the consolidated text of the draft revised FTP Code.

Part 2 of the report of the working group

4.15 The Sub-Committee noted that part 2 of the report of the working group, containing the concise records of the discussions held after part 1 of the report of the group (FP 51/WP.2) had been finalized, together with the consolidated text of the draft revised FTP Code, would be submitted to FP 52 by the Chairman of the group as soon as possible after the meeting.

Plan of action

4.16 The Sub-Committee noted the view of the group that there was a good chance that the comprehensive review of the FTP Code could be finalized at FP 52, given that the intensive work by the correspondence group on the basis of the consolidated text of the draft revised Code will form part 2 of the report of the group (see paragraph 4.13). Therefore, no special action plan for the work to be undertaken was prepared.

Establishment of the correspondence group

4.17 The Sub-Committee agreed to establish a correspondence group, under the co-ordination of Japan*, and instructed the group to:

---

* **Co-ordinator**:

Mr. Tatsuhiro Hiraoka
Chief Researcher
Fire Safety Division
Research Institute of Marine Engineering
1-5-12 Fujimicho
Higashimurayama
Tokyo 189-0024
Japan
Tel: +81 42 394 3615
Fax: +81 42 394 1119
E-mail: hiraoka@rime.jp

.1 develop the complete text of the draft revised FTP Code, on the basis of part 2 of the report of the working group and document FP 51/WP.2, taking also into account documents FP 50/11/6 and FP 51/11;

.2 develop draft amendments to the Guidelines for the application of plastic pipes on ships (resolution A.753(18)), to accommodate fire safety requirements for synthetic rubber pipes;

.3 develop draft SOLAS requirements for the control of the installation of fire doors with three-sided frames;

.4 develop a unified interpretation of part 3 of the FTP Code concerning large fire doors, taking into account document FP 51/9/2; and

.5 submit a report to FP 52.

4.18 The Sub-Committee recalled that the group had been given additional terms of reference under agenda items 9 and 11 (see paragraphs 9.19 and 11.3).

5 RECOMMENDATION ON EVACUATION ANALYSIS FOR NEW AND EXISTING PASSENGER SHIPS

General

5.1 The Sub-Committee recalled that FP 47, noting that MSC 75, in approving the Interim Guidelines on evacuation analyses for new and existing passenger ships (MSC/Circ.1033), encouraged Member Governments to collect and submit to the Sub-Committee any information and data resulting from research and development activities, full-scale tests and findings on human behaviour which may be relevant for the necessary future upgrading of the present Interim Guidelines, and had agreed to keep this matter on its work programme, taking into account that the two methods of evacuation analysis provided in the Interim Guidelines still needed to be validated.

5.2 The Sub-Committee recalled that FP 50 had established a drafting group to prepare draft amendments to the Interim Guidelines for evacuation analyses for new and existing passenger ships (MSC/Circ.1033) for consideration by the Sub-Committee.

5.3 The Sub-Committee also recalled that FP 50 had established a correspondence group to progress the work on this matter, with the terms of reference, set out in paragraph 5.7 of document FP 50/21 and instructed the group to submit a report to FP 51.

Report of the correspondence group

5.4 The Sub-Committee considered the report of the Correspondence Group on Evacuation Analyses for New and Existing Passenger Ships (FP 51/5 and FP 51/5/1) together with document FP 51/INF.2 (Japan) and, having approved it in general, took action as outlined in paragraphs 5.5 and 5.6.

5.5 With regard to the safe area concept, the Sub-Committee noted the views of several delegations that the draft revised Interim Guidelines should be made mandatory and include guidance regarding the new passenger safety amendments on safe areas. In this context, the

observer from CLIA expressed the view that the Guidelines should be validated before making them mandatory under SOLAS.

5.6 Having considered the above views, the Sub-Committee agreed to complete the work on the draft revised Interim Guidelines with a view towards finalization at the next session, taking into account any relevant data available on validation of the Guidelines. In this regard, the Sub Committee invited Member Governments and international organizations to validate the Guidelines and report these data to the Sub-Committee.

Establishment of the working group

5.7 Recalling its relevant decision at FP 50 regarding a working group, the Sub-Committee, recognizing the necessity to make progress on this item, established the Working Group on Recommendation on Evacuation Analysis for New and Existing Passenger Ships and, taking into account the comments and decisions made in plenary and the report of the correspondence group (FP 51/5 and FP 51/5/1), instructed it to finalize the draft Revised Interim Guidelines for evacuation analyses for new and existing passenger ships based on the draft text set out in the annex to the document FP 51/5/1, taking into account the report of the correspondence group (FP 51/5) and document FP 51/INF.2.

Report of the working group

5.8 Having received the report of the working group (FP 51/WP.3), the Sub-Committee approved it in general and took action as outlined hereunder.

5.9 The Sub-Committee noted the outcome of the group's consideration with regard to the issues of counterflow; safety factor; link to maritime EXODUS Handbook; response time distribution; awareness time for simplified analysis; and the "safe area" concept, fire thresholds and habitability timeframe from the point of view of evacuation analysis.

5.10 Having discussed the interim status of the Guidelines, the Sub-Committee decided that these should be definitive Guidelines and, notwithstanding its previous decision regarding completion of the Guidelines at the next session as reflected in paragraph 5.6, agreed to the draft Guidelines for evacuation analysis for new and existing passenger ships and the associated draft MSC circular, set out in annex 5, for submission to MSC 83 for approval.

5.11 In the context of paragraph 5.10, the Sub-Committee noted that paragraph 10 of the aforementioned draft MSC circular had encouraged Member Governments to:

.1 collect and submit to the Sub-Committee for further consideration, any information and data resulting from research and development activities, full-scale tests and findings on human behaviour which may be relevant for the necessary future upgrading of the Guidelines;

.2 submit to the Sub-Committee information on experience gained in the implementation of the Guidelines; and

.3 use the Guidance on validation/verification of evacuation simulation tools provided in annex 3 to the circular when assessing the ability of evacuation simulation tools to perform an advanced evacuation analysis.

5.12 Having finalized the draft Guidelines for evacuation analysis for new and existing passenger ships, the Sub-Committee invited the Committee to delete this item from its work programme.

6 REVIEW OF THE SPS CODE

6.1 The Sub-Committee recalled that, at FP 50, it had noted the views expressed by several delegations on the need for caution before reaching, in the course of consideration of this item, any firm conclusions, bearing in mind that document DE 49/12 (Norway) proposed several amendments to sections 1.2 and 1.3 of the SPS Code that would define "training ships" in a broader sense than is currently the case, which may have a direct bearing on the work to be undertaken on the fire protection-related provisions of the Code, and had agreed to await the outcome of DE 49 before proceeding any further on this item.

6.2 In considering document FP 51/6 (Secretariat), containing information on the outcomes of DE 49, COMSAR 10, SLF 49 and DSC 11, the Sub-Committee noted that:

.1 DE 49 had considered document DE 49/12 (Norway) and, taking into account that the Norwegian proposal did not receive support from the majority of the delegations and that no other concrete proposals for amendments to the SPS Code were received, had decided to establish a correspondence group to progress the matter intersessionally;

.2 COMSAR 10 had agreed to a draft new text for chapter 9 of the SPS Code, as set out in paragraph 9.4 of document COMSAR 10/16;

.3 SLF 49 had agreed to establish a correspondence group to progress the work under their purview; and

.4 DSC 11, having noted that some delegations expressed the view that carriage of dangerous goods in special purpose ships should be subject to the relevant provisions of the IMDG Code, as amended, and that handling and stowage of such cargoes ashore should be subject to a formal safety assessment, had instructed its Editorial and Technical Group to consider the matter at its May 2007 meeting and advise DSC 12 accordingly.

6.3 Having noted that, at DE 49, the Norwegian proposal did not receive support from the majority of the delegations and that no other concrete proposals for amendments to the SPS Code within its purview had been received, the Sub-Committee decided to delay the work on this item until DE 50 (co-ordinator) had considered the report of its Correspondence Group on Review of the SPS Code (DE 50/9).

6.4 In view of the above decision, the Sub-Committee agreed to invite the Committee to extend the target completion date of the item to 2008 and invited Member Governments and international organizations to submit relevant comments and proposals to FP 52, which should take into account the outcomes of DE 50, SLF 50 and DSC 12 on this matter, as appropriate.

6.5 The Sub-Committee requested the Secretariat to inform the DE, SLF and DSC Sub-Committees of the above outcome.

7 DEVELOPMENT OF PROVISIONS FOR GAS-FUELLED SHIPS

7.1 The Sub-Committee recalled that MSC 78 agreed upon a proposal from Norway to develop provisions for gas-fuelled ships aimed at establishing an international standard for the installation and operation of internal combustion engine installations.

7.2 The Sub-Committee also recalled that FP 50 had decided to delay the work on this item until BLG 10 had considered the report of its Correspondence Group on Development of Provisions for Gas-Fuelled Ships (BLG 10/6) and had agreed to invite Member Governments and international organizations to submit comments and proposals to FP 51, taking into account the outcomes of DE 49 and BLG 10 on this matter.

7.3 The Sub-Committee further recalled that MSC 81, as requested, had assigned the co-ordinator role for the item to the BLG Sub-Committee (originally this role had been assigned to the DE Sub-Committee).

7.4 In considering document FP 51/7 (Secretariat), containing information on the outcomes of DE 49 and BLG 10, the Sub-Committee noted that:

.1 DE 49 had invited BLG 10 to take into account the comments made by IACS in document DE 49/10/1, and Member Governments and international organizations had been invited to submit comments and proposals to DE 50, taking into account the outcome of BLG 10, as appropriate;

.2 BLG 10 had agreed to a long-term action plan for the further work on the provisions for gas-fuelled ships with a view to finalization of draft Interim Guidelines on safety for gas-fuelled engine installations in ships at BLG 12 (2008), taking into account that draft Interim Guidelines would be prepared at BLG 11 for dissemination to DE 51, FP 52 and STW 39 for matters under their purview; and

.3 BLG 10 had also agreed that, following completion of the Interim Guidelines, a draft International Code of Safety for Gas-fuelled Engine Installations in Ships would be developed, using the Interim Guidelines as a basis.

7.5 Having noted the above outcomes, in particular, that a draft Interim Guidelines would be prepared at BLG 11 for referral to DE 51, FP 52 and STW 39 for consideration of matters under their purview, the Sub-Committee decided to delay the work on this item until the aforementioned draft Interim Guideline is available.

7.6 In view of the above developments, the Sub-Committee agreed to invite the Committee to extend the target completion date of the item to 2009 and invited Member Governments and international organizations to submit pertinent comments and proposals to FP 52, which should take into account the outcomes of DE 50 and BLG 11 (co-ordinator) on this matter, as appropriate.

7.7 The Sub-Committee requested the Secretariat to inform the BLG and DE Sub-Committees of the above outcome.

8 MEASURES TO PREVENT FIRES IN ENGINE-ROOMS AND CARGO PUMP-ROOMS

General

8.1 The Sub-Committee recalled that, at FP 49, it had considered documents FP 49/16, FP 49/16/4 and FP 49/INF.6 (Republic of Korea), proposing guidelines be developed on measures to prevent fire in engine-rooms and cargo pump-rooms, and noted that the goal of the proposal was to provide practical and comprehensive engine-room and cargo pump-room fire safety guidelines for shipbuilders, ship operators, recognized organizations and Administrations. Taking into account that this item was not on the agenda for that session, the Sub-Committee invited Member Governments to submit comments and proposals to FP 50.

8.2 The Sub-Committee also recalled that FP 50 had established the Correspondence Group on Measures to Prevent Fire in Engine-Rooms and Cargo Pump-Rooms to progress the matter intersessionally, with the terms of reference set out in paragraph 7.4 of document FP 50/21.

8.3 The Sub-Committee had for its consideration under this agenda item the report of the aforementioned correspondence group (FP 51/8) and documents FP 51/8/1 and FP 51/8/2 (Republic of Korea) and FP 51/8/3 (IACS).

Report of the correspondence group

8.4 Having considered the report of the correspondence group (FP 51/8) together with the documents referred to in paragraph 8.3, the Sub-Committee approved it in general and took action as outlined in paragraphs 8.5 to 8.10.

8.5 In considering parts VI (Ergonomics arrangement) and VII (Human element) of the draft Guidelines for measures to prevent fire in engine-rooms and cargo pump-rooms prepared by the correspondence group (FP 51/8, annex), the Sub-Committee, following discussions, agreed to retain parts VI and VII in the Guidelines, taking into account that other expert bodies may be requested to provide expert advice for matters under their purview, if necessary.

Gas monitoring system in cargo pump-rooms

8.6 The Sub-Committee considered document FP 51/8/1 (Republic of Korea), containing an experiment on the placement of gas monitoring devices in cargo pump-rooms and stating that the positions prone to dangerous leakage and pre-set level of flammable gas mixtures are not defined in the Unified interpretations of SOLAS chapter II-2, the FSS Code, the FTP Code and related fire test procedures (MSC/Circ.1120). In this regard, the Sub-Committee agreed that this issue should be further discussed in detail by the correspondence group.

Safe manual operating position from local fire in engine-rooms

8.7 In considering document FP 51/8/2 (Republic of Korea), pointing out that the current requirements for operating fire-extinguishing systems are vague such that recognized organizations apply their own set of requirements, which often leads to confusion and misunderstanding, the Sub-Committee agreed to clarify matters related to reduce high heat flux and the position of manual isolation valves.

Clarification of SOLAS regulation II-2/4.2.2.3.2

8.8 In considering document FP 51/8/3 (IACS), recommending that SOLAS regulation II-2/4.2.2.3.2 be clarified with regard to the extent that fuel oil tanks, that are located in category A machinery spaces, should be protected from radiant heat, the Sub-Committee agreed that this matter should be further considered in detail by the correspondence group.

Establishment of the correspondence group

8.9 Having considered the above documents and the views expressed on matter, the Sub-Committee agreed to re-establish the correspondence group, under the co-ordination of the Republic of Korea*, and instructed it, taking into account the comments and decisions made in plenary, to:

.1 further develop the draft Guidelines for measures to prevent fires in engine-rooms and cargo pump-rooms, based on the draft text set out in the annex to document FP 51/8, taking into account documents FP 51/8/1, FP 51/8/2, FP 51/8/3 and FP 51/9/10; and

.2 submit a report to FP 52.

8.10 In this regard, the Sub-Committee recalled its decision that the above correspondence group should also consider matters related to the application of SOLAS regulation II-2/4.5.1.1, regarding pump-rooms intended solely for ballast transfer or fuel oil transfer and fixed hydrocarbon gas detection systems on double-hull oil tankers (see paragraphs 9.17 and 10.10).

9 CONSIDERATION OF IACS UNIFIED INTERPRETATIONS

General

9.1 The Sub-Committee noted that MSC 81 had approved the unified interpretations prepared at FP 50 (MSC.1/Circ.1203), which were based on the submissions from IACS, and that MSC 82 had adopted, by resolution MSC.216(82), the amendments to SOLAS regulation II-2/4.5.2.3, and approved MSC.1/Circ.1204 recommending early application of the aforementioned amendments.

9.2 The Sub-Committee recalled that, in considering documents FP 50/11/3 (IACS), providing comments on IACS unified interpretation SC 178 on Emergency fire pumps in cargo ships; FP 50/11/6 (IACS), on matters related to the application to cargo ships of interpretations to SOLAS regulations II-2/5.3 and II-2/6.2, as contained in the unified interpretations of SOLAS chapter II-2, the FSS Code, the FTP Code and related fire test

---

* **Co-ordinator**:

Dr. Mann-Eung Kim
General Manager
Korean Register of Shipping
54 Sinseongro
23-7 Jang-dong Yuseong-gu
Daejeon
Republic of Korea
Tel: +82 42 869 9442
Fax: +82 42 862 6085
E-mail: mekim@krs.co.kr

procedures (MSC/Circ.1120); and FP 50/11/6, on matters related to the application to cargo ships of interpretations to SOLAS regulations II-2/5.3 and II-2/6.2, as contained in MSC/Circ.1120, FP 50 had decided that the above documents needed further consideration and invited Member Governments and international organizations to submit comments and proposals to FP 51.

9.3 The Sub-Committee also recalled that MSC 82, having considered an interpretation of SOLAS regulation II-2/4.5.1.1 prepared by BLG 10, concerning pump-rooms intended solely for ballast transfer or fuel oil transfer, had agreed to refer the matter to FP 51 (FP 51/9/10).

Location of paint lockers within the cargo block

9.4 The Sub-Committee considered IACS unified interpretation SC 201 on Location of paint lockers within cargo block (FP 51/9), in which IACS revised the unified interpretation SC 201 after having considered the views expressed at FP 50 on its submission (FP 50/11/2), in particular, that there was no justification for the interpretation since the SOLAS requirements were clear on this issue, and noted that IACS had decided to withdraw the first revision of SC 201 since there was no consensus on the matter and prepared a revised text to ensure a harmonized application of both the relevant SOLAS and IBC Code regulations.

9.5 Having considered the above document and the views expressed on the matter, the Sub-Committee agreed to prepare an appropriate unified interpretation (see paragraph 9.20).

Storage of fire-extinguishing media

9.6 The Sub-Committee considered document FP 51/9/1 (IACS), containing the unified interpretation SC 204 on Storage of fire-extinguishing media forward the cargo holds (SOLAS regulation II-2/10.4.3 and the FSS Code, chapter 5, paragraph 2.1.3.3), which specifies the criteria on which arrangements where the fixed fire-fighting media are stored in room located forward the protected cargo holds may be accepted and, after having made minor modifications, agreed to prepare an appropriate unified interpretation (see paragraph 9.20).

Criteria for approving large fire doors

9.7 The Sub-Committee considered IACS unified interpretation FTP 3 (FP 51/9/2) (FTP Code and resolution A.754(18)), which establishes criteria for approving fire doors having dimensions larger than the relevant prototype tested in accordance with the FTP Code, and decided that this matter be included in the work to be carried out under agenda item 4 (Comprehensive review of the Fire Test Procedures Code) (see paragraph 4.12).

Protection of fuel oil arrangements

9.8 The Sub-Committee considered document FP 51/9/3 (IACS), containing IACS unified interpretation SC 211 on Protection of fuel oil arrangements, which was developed to clarify acceptable arrangements for complying with the segregation provisions contained in SOLAS regulation II-2/4.5.1.1 and the protection of fuel oil tanks contained in MARPOL regulation I/12A, and agreed to prepare an appropriate draft unified interpretation (see paragraph 9.20).

Admissible distances for entrances, air inlets and openings in the superstructures of tankers

9.9 The Sub-Committee considered documents FP 51/9/4 and FP 51/9/7 (IACS), addressing acceptance criteria for the location of access doors to spaces facing the cargo area, and agreed that a single comprehensive approach should be taken to harmonize the admissible distances required in the 1974 SOLAS Convention and the IBC and IGC Codes for entrances, air inlets and openings in the superstructures of tankers, taking into account publication IEC 60092-502, the unified interpretations contained in MSC/Circ.474, MSC/Circ.1120 and MSC/Circ.1203 and document FP 51/9/4. Having decided that a new item should be established in the Sub-Committee's work programme to consider this matter in detail, the Sub-Committee agreed to a justification for the proposal for a new work programme item, as set out in annex 6, for consideration by MSC 83.

Portable fire-fighting appliances in cargo holds loaded with vehicles with fuel in their tanks

9.10 The Sub-Committee recalled that FP 50, having considered document FP 50/20 (IACS) which addressed matters related to the applicability of SOLAS regulation II-2/20.6, expressed the view that it was not the intent of the aforementioned regulation to require cargo holds, loaded with vehicles with fuel in their tanks in open or closed containers, to be provided with portable fire-fighting appliances.

9.11 In light of the above, the Sub-Committee considered document FP 51/9/5 (IACS), providing comments on IACS unified interpretation SC 205, which was prepared on the basis of the clarification agreed by FP 50 on this matter, and agreed to prepare an appropriate unified interpretation (see paragraph 9.20).

Categorization of fan rooms serving engine-rooms

9.12 The Sub-Committee considered document FP 51/9/6 (IACS), providing comments on the categorization of a fan room depending on its purposes (i.e., either it is dedicated to the ventilation of the engine-room or not) and the arrangement of ducts, and agreed to prepare an appropriate unified interpretation (see paragraph 9.20).

Fire integrity of open and closed ro-ro spaces on passenger ships

9.13 The Sub-Committee considered document FP 51/9/8 (IACS), which discussed the application of SOLAS regulations II-2/9.2.2.4.2.2 and II-2/9.6.3 relative to closed and open ro-ro spaces on passenger ships carrying not more than 36 passengers, and, having agreed that more detailed consideration was needed to resolve this matter, invited Member Governments and international organizations to submit comments and proposals to FP 52.

Emergency fire pumps on cargo ships

9.14 The Sub-Committee recalled that, at FP 50, IACS had advised the Sub-Committee (FP 50/11/3) that it decided to withdraw IACS unified interpretation SC 178 until clear guidance is provided at an international level on emergency fire pumps in cargo ships.

9.15 In light of the above, the Sub-Committee considered document FP 51/9/9 in which IACS, having considered the comments made at FP 50, revised the unified interpretation SC 178 accordingly, and decided that more detailed consideration was needed to resolve this matter. The

Sub-Committee therefore invited Member Governments and international organizations to submit comments and proposals to FP 52. Additionally, the Sub-Committee requested the Secretariat to refer the aforementioned document to the SLF Sub-Committee for consideration.

Pump-rooms intended solely for ballast transfer or fuel oil transfer

9.16 The Sub-Committee noted that BLG 10, having considered document BLG 10/9/1 (IACS), concerning an interpretation of SOLAS regulation II-2/4.5.1.1 with regard to pump-rooms intended solely for ballast transfer or fuel oil transfer, had agreed to a draft MSC circular on Interpretation of SOLAS regulation II-2/4.5.1.1, for submission to MSC 82 for approval, which agreed to refer it to the Sub-Committee for consideration and subsequent submission to MSC 83 for approval (FP 51/9/10).

9.17 Having considered the above interpretation (FP 51/9/10, annex), the Sub-Committee decided to refer this matter to the correspondence group established under agenda item 8 (Measures to prevent fires in engine-rooms and cargo pump-rooms) for detailed consideration and invited the Committee to note the above decision (see paragraph 8.10).

Use of combustible materials on board ships

9.18 The Sub-Committee recalled that, at FP 50, in considering document FP 50/11/6 (IACS) on matters related to the application to cargo ships of interpretations to SOLAS regulations II-2/5.3 and II-2/6.2, as contained in MSC/Circ.1120, it had decided to further consider the above document at FP 51 and invited Members and observers to submit comments and proposals to FP 51.

9.19 Notwithstanding the above, the Sub-Committee decided to refer the aforementioned document to the Correspondence Group on the Comprehensive Review of the Fire Test Procedures Code for detailed consideration (see paragraph 4.17.1).

Unified interpretations of SOLAS chapter II-2 and the FSS and IBC Codes

9.20 Having considered the above matters and the relevant text prepared by the Secretariat (FP 51/WP.7), the Sub-Committee agreed to the draft unified interpretations of:

.1 SOLAS chapter II-2, set out in annex 7;

.2 the International Fire Safety System (FSS) Code, set out in annex 8; and

.3 the International Bulk Chemical (IBC) Code, set out in annex 9,

and the associated draft MSC circulars, for submission to MSC 83 for approval.

10 ANALYSIS OF FIRE CASUALTY RECORDS

General

10.1 The Sub-Committee recalled that, at FP 50, it had noted the oral statement by the observer from ICS that the Inter-Industry Working Group (IIWG), which was established

to study incidents of fires and explosions on chemical and product tankers, could not finalize its report in time for consideration at FP 50 and would forward the report, including its recommendations, directly to MSC 81.

10.2 The Sub-Committee noted (FP 51/10) that MSC 81 had considered the report on activities of the Inter-Industry Working Group (MSC 81/8/1 and MSC 81/INF.8) submitted by ICS, IAPH, IACS, CEFIC, OCIMF, INTERTANKO and IPTA and, based on the recommendations listed in paragraphs 13 to 17 of document MSC 81/8/1, had agreed to refer the issues related to the proposals on inert gas systems to FP 51 and DE 50, for consideration under the agenda item dealing with casualty analysis, and instructed the Sub-Committees to report to MSC 83.

10.3 The Sub-Committee noted (FP 51/10/2) that MSC 82, having considered a new work item proposal from Norway (MSC 82/21/15) and the comments by Singapore (MSC 82/21/20) related to fires and explosions on chemical and product tankers, had decided not to establish the work programme item for the BLG Sub-Committee at this stage, but agreed to refer the aforementioned documents to FP 51 and DE 50 for consideration and advice so that MSC 83 could take appropriate action on the matter, when it considers the reports of the FP and DE Sub-Committees on the specific issues it had requested the Sub-Committees to consider.

Safety of oil and chemical tankers

10.4 In considering the aforementioned report of IIWG (MSC 81/8/1 and MSC 81/INF.8), which recommended that the Committee give consideration to amending SOLAS chapter II-2 to provide for the application of inert gas systems to new oil tankers of less than 20,000 dwt and new chemical tankers, the Sub-Committee noted the views of several delegations and observers that the inert gas systems would reduce the risk of explosion and, therefore, should be required, while also noting the view that the value of operational measures should not be underestimated, taking into account that the most significant contributory factor to the casualties studied by the IIWG was a failure to follow or understand cargo operation guidelines and procedures (at both the shipboard and ship management level).

10.5 The Sub-Committee considered document MSC 82/21/15 (Norway), proposing to develop more user-friendly regulations for inerting of tanks for new and existing tankers when handling and transporting low flash point chemicals and petroleum products, and the comments by Singapore (MSC 82/21/20), in particular that the application of inert gas systems to existing tankers should only be considered after a thorough FSA study, and noted the views of several delegations and observers that any solution should be holistic in nature and take into account the costs associated with the full range of damage to both the ship and the environment.

10.6 The Sub-Committee noted, during the discussion, the results for the preliminary FSA study carried out by Japan (FP 51/10/1) on the application of requirements for inert gas systems to tankers of less than 20,000 dwt, which was based on casualty data and ship type data for the period of 1978 to 2005, as supplied by Lloyd's Register Fairplay; and that the study concluded that the installation of inert gas systems on tankers of less than 20,000 dwt has not been justified by the analysis. Several delegations pointed out that the preliminary study only calculated the gross costs for averting a fatality versus the net costs, which include damage to the surrounding area and the environment.

10.7 Following the consideration of the proposals and recommendations contained in the above documents, the Sub-Committee discussed at length how to proceed with the matter and, having recognized that it would require detailed consideration, taking into account the complexity of the matter, including the disadvantages (i.e., affixation) and potential benefits (i.e., reducing the risk of explosion) of application of inert gas systems for the practical safety-related implications to the operation of chemical tankers and product tankers of less thank 20,000 dwt, agreed to recommend to the Committee to include, in the Sub-Committee's work programme, a new item on "Measures to prevent explosions on oil and chemical tankers transporting low-flash point cargoes", with two sessions needed to complete this item, in co-operation with the BLG and DE Sub-Committees.

10.8 The Sub-Committee agreed that under the proposed work programme item, the Sub-Committee should first consider measures for new ships; and, having noted the opinion of the considerable number of delegations, further agreed that, depending on the outcome of the consideration of the aforementioned measures, the Sub-Committee could consider the appropriate measures for existing oil and chemical tankers transporting low-flash point cargoes.

10.9 Having considered the above issues, the Sub-Committee invited the Committee to consider the above recommendations and take action as appropriate. In this regard, the Sub-Committee also invited DE 50 to note the above recommendations.

Requirements for hydrocarbon gas detection systems on double-hull oil tankers

10.10 In considering document MSC 82/21/12 (Austria *et al*) containing a proposal, which was already approved by MSC 82, to include a new item on "Fixed hydrocarbon gas detection systems on double hull oil tankers" in the Sub-Committee's work programme, in co-operation with the BLG Sub-Committee, the Sub-Committee agreed to instruct the correspondence group established under agenda item 8 (Measures to prevent fires in engine-rooms and cargo-pump rooms) to give preliminary consideration to the proposal contained in document MSC 82/21/12 and to submit the results under the relevant agenda item to FP 52 (see paragraphs 8.9 and 8.10). In this context, the Sub-Committee also invited Member Governments and international organizations to submit relevant comments and proposals to FP 52.

11 FIRE RESISTANCE OF VENTILATION DUCTS

11.1 The Sub-Committee recalled that MSC 81, having considered a proposal by the United Kingdom (MSC 81/23/1) to amend SOLAS chapter II-2 to require ventilation system ducts to be of steel or equivalent material where the current requirement is for non-combustibility; and to amend both SOLAS chapter II-2 and the HSC Code, to specify a suitable limit on the calorific potential per unit area, in respect of the parts of ventilation ducts which are permitted to be combustible but of low flame spread, had agreed to include a high priority item on "Fire resistance of ventilation ducts", with a target completion date of 2007, in the Sub-Committee's work programme and the provisional agenda for FP 51.

11.2 Having considered documents FP 51/11 and MSC 81/23/1 (United Kingdom), the Sub-Committee noted the views of several delegations that the scope of work on this item should be extended to a comprehensive review of all ventilation requirements (in lieu of considering only the ducts) and decided not to propose an expansion of the scope of work at this stage. However, Member Governments and international organizations were invited to submit comments and proposals to the Committee in accordance with the Guidelines or the organization and method of work (MSC-MEPC.1/Circ.1) and FP 52.

11.3 To make progress on the work to be undertaken, the Sub-Committee agreed to instruct the correspondence group established under agenda item 4 (Comprehensive review of the Fire Test Procedures Code) to consider the item taking into account documents FP 51/11 and MSC 81/23/1 and report to FP 52 (see paragraph 4.18).

11.4 Consequently, the Sub-Committee invited the Committee to extend the target completion date of this item to 2009.

12 APPLICATION OF REQUIREMENTS FOR DANGEROUS GOODS IN SOLAS AND THE 2000 HSC CODE

General

12.1 The Sub-Committee recalled that, at MSC 81, the Committee, having considered a proposal by Japan (MSC 81/23/5) to develop amendments to SOLAS regulation II-2/19 and chapter 7 of the 2000 HSC Code and to prepare a guidance on matters related to the application of requirements for dangerous goods in packaged form for SOLAS and 2000 HSC Code, had agreed to include, in the FP and DSC Sub-Committees' work programmes and the provisional agendas for FP 51 and DSC 11, a new high priority item on "Application of requirements for dangerous goods in package form in SOLAS and 2000 HSC Code", with a target completion date of 2007. The Committee, at MSC 82, also agreed to assign the Sub-Committee as co-ordinator on this matter.

12.2 The Sub-Committee also recalled that MSC 81, having noted the adoption of amendments to the UN Recommendations on the transport of dangerous goods, whereby the flash point of 61°C in various places within the IMDG Code would read 60°C, had agreed that consequential amendments to SOLAS regulation II-2/19 (II-2/54) would be necessary and instructed FP 51 to develop appropriate amendments to SOLAS regulation II-2/19 as a result of the change to the flashpoint in the IMDG Code.

12.3 The Sub-Committee further recalled that MSC 81 had noted the view of the DSC Sub-Committee that, if the amendment to paragraph 7.17.3.6.1 of the 2000 HSC Code, as prepared by FP 49, is included in the revised HSC Code, a consequential amendment to SOLAS regulation II-2/19.3.6.1 should also be prepared by the FP Sub-Committee; and that, if the aforementioned amendments to SOLAS and the HSC Code are approved by the Committee, the DSC Sub-Committee's work programme should include an item on the development of the associated guidance concerning protective clothing and had:

.1 instructed FP 51 to consider the aforementioned view of DSC 10 regarding consequential amendments to SOLAS regulation II-2/19.3.6.1 and advise MSC 83 as appropriate; and

.2 agreed to include, in the DSC Sub-Committee's work programme, a high priority item on "Guidance on protective clothing", with two sessions needed to complete the item.

Application of requirements for dangerous goods in packaged form

12.4 Having considered document MSC 81/23/5 (Japan), containing the proposed amendments to SOLAS regulation II-2/19 and chapter 7 of the 2000 HSC Code and a draft circular on

application of requirements for dangerous goods in packaged form for SOLAS and 2000 HSC Code, the Sub-Committee agreed to invite the Committee to extend the target completion date of the item to 2008 and invited Member Governments and international organizations to submit relevant comments and proposals to FP 52, which should take into account the outcome of DSC 12 on this matter, as appropriate.

12.5 The Sub-Committee requested the Secretariat to inform the DSC Sub-Committee of the above outcome.

13 UNIFIED INTERPRETATION ON THE NUMBER AND ARRANGEMENT OF PORTABLE EXTINGUISHERS IN ACCOMMODATION SPACES, SERVICE SPACES, CONTROL STATIONS, ETC.

13.1 The Sub-Committee recalled that, at FP 49, it had considered a proposal by China (FP 49/16/2) to develop a unified interpretation or a guideline on the number and arrangement of portable fire extinguishers on board and had agreed that the proposal should be considered as a new work item. Subsequently, MSC 81, having considered a relevant proposal by China (MSC 81/23/15) on the aforementioned matter, had included the above item in the Sub-Committee's work programme and agenda for FP 51, with a target completion date of 2008.

13.2 The Sub-Committee, having considered documents submitted by:

.1 China (FP 51/13), containing a proposed draft Unified interpretation on the number and arrangement of portable fire extinguishers in accommodation and service spaces;

.2 United States (FP 51/13/1), recommending the number, distribution and type of portable fire extinguishers for the various types of spaces on ships, considering a uniform risk-based interpretation; and

.3 Japan (FP 51/13/2), commenting on the number and arrangement of portable fire extinguishers,

and agreed to merge the above proposals and recommendations with a view to developing a single unified interpretation on the number and arrangement of portable fire extinguishers on board ships.

Establishment of a drafting group

13.3 To progress the matter, the Sub-Committee decided to establish the Drafting Group on Unified Interpretation on the Number and Arrangement of Portable Fire Extinguishers and instructed it, taking into account the comments made and decisions taken in plenary, to further develop the draft unified interpretation of SOLAS chapter II-2 on the number and arrangement of portable fire extinguishers on board ships, taking into account documents FP 51/13, FP 51/13/1 and FP 51/13/2, for consideration by the Sub-Committee.

Report of the drafting group

13.4 Having received the report of the drafting group (FP 51/WP.6), the Sub-Committee approved it in general and endorsed the group's views that:

.1 there should be no difference in the numbers and arrangements for portable fire extinguishers for passenger ships and other types of ships;

.2 the guidelines should be applied to ships constructed on or after the date of approval of the circular; and

.3 the current requirements for spare charges are adequate and should therefore not be included in the interpretation.

13.5 Having considered the above issues, the Sub-Committee agreed, in principle, to the draft unified interpretation of SOLAS chapter II-2 on the number and arrangement of portable fire extinguishers in accommodation spaces, service spaces, control stations, etc., and the associated draft MSC circular, as set out in the annex to document FP 51/WP.6, for further consideration at FP 52.

13.6 Member Governments and international organizations were also invited to submit comments and proposals to FP 52, taking into account the draft unified interpretation set out in the annex to document FP 51/WP.6.

14 REVIEW OF FIRE SAFETY OF EXTERNAL AREAS ON PASSENGER SHIPS

General

14.1 The Sub-Committee recalled that, at MSC 81, following the approval of the draft amendments to SOLAS chapter II-2 related to the safety of cabin balcones, which were prepared following the fire on board the **Star Princess**, the Committee had agreed to include a new high priority item on "Review of fire safety of external areas on passenger ships" in the Sub-Committee's work programme and provisional agenda for FP 51.

14.2 In this context, the Sub-Committee noted that, at MSC 82, the aforementioned amendments were adopted by resolution MSC.216(82) with an expected entry-into-force date of 1 July 2008.

14.3 The Sub-Committee, having considered documents submitted by:

.1 the United States (FP 51/14), discussing in-depth various issues relating to the fire safety of external areas on passenger ships, including an important issue on the categorization of external areas, which is essential for consideration of any application of fire protection requirements to external areas, and suggesting possible measures to address those issues; and

.2 ICCL (MSC 82/3/14), presenting the results of balcony fire risk assessments at MSC 82 and (FP 51/14/1) discussing various aspects of the fire safety of external areas on passenger ships and including recommendations for addressing the issues,

noted the views of several delegations on the need to take a risk-based approach.

Establishment of a correspondence group

14.4 In considering how best to progress the work on this matter, the Sub-Committee decided to establish the Correspondence Group on Review of Fire Safety of External Areas on Passenger Ships, under the co-ordination of Italy*, and instructed it, taking into account all relevant information contained in documents FP 51/14 and FP 51/14/1, and comments and decision made in plenary, to:

.1 develop draft guidelines for categorization of external areas based on fire risk, and relevant fire safety measures;

.2 develop draft guidelines for a simplified risk assessment method to allow operators to perform an onboard evaluation of the relative fire risk of external areas, taking into account the category of the area, the materials used therein, the arrangement, relevant operational measures, and potential sources of ignition; and

.3 submit a report to FP 52.

14.5 Following the above decision, the Sub-Committee invited the Committee to extend the target completion date of this item to 2009.

15 PERFORMANCE STANDARDS FOR FIXED WATER SPRAYING, FIRE DETECTION AND FIRE ALARM SYSTEMS FOR CABIN BALCONIES

General

15.1 The Sub-Committee recalled that, at MSC 81, following consideration of the report of the Working Group on Passenger Ship Safety, the Committee had agreed to include a new high priority item on "Performance standards for fixed water-spraying, fire detection and fire alarm systems for cabin balconies" in the Sub-Committee's work programme and provisional agenda for FP 51, taking into account the draft amendments to SOLAS chapter II-2 related to the safety of cabin balconies.

15.2 The Sub-Committee recalled also that MSC 81 had instructed FP 51 to start the work on this matter promptly and instructed the Correspondence Group on Performance Testing and Approval Standards for Fire Safety Systems to prepare criteria for the testing and approval of balcony fire protection systems.

15.3 In this context, the Sub-Committee noted that, at MSC 82, the draft amendments to SOLAS chapter II-2 related to the safety of cabin balcones were adopted by resolution MSC.216(82) with an expected entry-into-force date of 1 July 2008.

---

* **Co-ordinator**:

Mr. C. Abbate
Manager, Safety Sector
RINA S.P.A.
Via Corsica 12
Genova 16128
Italy
Tel.: +39 010 5385347
Fax: +39 010 5351000
E-Mail: claudio.abbate@rina.org

Report of the correspondence group

15.4 The Sub-Committee considered the relevant part of the report of the Correspondence Group on Performance Testing and Approval Standards for Fire Safety Systems (FP 51/3/1, paragraph 4 and annexes 1 and 2), regarding the criteria for the testing and approval of balcony fire protection systems, in particular the preliminary full scale testing that was used to establish a technical basis for the new draft test standards.

15.5 As agreed under agenda item 3 (see paragraph 3.8), the Sub-Committee, having briefly discussed the draft test standards prepared by the correspondence group, instructed the Working Group on Performance Testing and Approval Standards for Fire Safety Systems, established under agenda item 3 to finalize, as a high priority, the draft Guidelines for fixed pressure water-spraying fire-extinguishing systems and fixed fire detection and fire alarm systems for cabin balconies, as set out in annexes 1 and 2 to document FP 51/3/1, taking into account the comments and decisions made in plenary.

Report of the working group

15.6 Having considered the part of the report of the working group (FP 51/WP.1) relating to this item, the Sub-Committee took action as outlined in the following paragraphs.

Fixed pressure water-spraying fire-extinguishing systems for cabin balconies

15.7 The Sub-Committee noted that the group agreed to add the requirements for automatic systems, recognizing the need for that in addition to the requirements for manually released systems. The title of the standard was consequently changed to the Guidelines for the approval of fixed pressure water-spraying and water-based fire-extinguishing systems for cabin balconies.

15.8 Concerning the wind conditions expected on open deck areas, the Sub-Committee noted that the group, after extensive discussions, had generally agreed to use a nominal wind speed instead of actual wind speed, bearing in mind that the test ventilation conditions are intended to provide a safety factor. In an actual fire, the master and crew are expected to take appropriate actions to manoeuvre the ship to assist the suppression system.

15.9 The Sub-Committee further noted that the group had also agreed that the minimum capacity and design of the supply system for a manually released system should be based on the complete protection of the most hydraulically demanding section, and that the minimum capacity and design of the supply system for an automatic system should be based on the complete protection of the hydraulically most demanding area of 280 m^2, including the eight most hydraulically demanding balconies. In cases where the balcony system is supplied by the sprinkler system, the total system design area need not exceed 280 m^2.

15.10 Subsequently, the Sub-Committee agreed to the draft Guidelines for the approval of fixed pressure water-spraying and water-based fire-extinguishing systems for cabin balconies and the associated draft MSC circular, as set out in annex 10, for submission to MSC 83 for approval. In this regard, the Sub-Committee agreed that the approval of fixed pressure water-spraying and water-based fire-extinguishing systems for cabin balconies on passenger ships installed before 1 July 2008 should be left to the satisfaction of the Administration.

15.11 The observer from IACS expressed concern regarding the system capacity requirements where an automatic cabin balcony system is being supplied from another system and suggested that it should be possible to isolate the cabin balcony system from the supplying system to ensure that the capacity of the system is not impaired by the operation of the cabin balcony system.

Fixed fire detection and fire alarm systems for cabin balconies

15.12 The Sub-Committee noted that the group, having considered the draft Guidelines for the approval of fixed fire detection and fire alarm systems for cabin balconies (FP 51/3/1, annex 2), had agreed, in particular, that the system and its components should be suitably designed to withstand ambient temperature changes, vibration, humidity, shock, corrosion and impact normally encountered on ships, and that external components should additionally be designed to withstand sun irradiation, ultraviolet exposure, water ingress and corrosion normally encountered on open deck areas.

15.13 The Sub-Committee also noted that the group had decided that a specific performance test for the approval of fire detectors installed on cabin balconies was not needed, taking into account that many types of detection systems could be used for this application, and that existing detection systems were adequately tested to various national and international standards. In addition, the Sub-Committee noted that the guidelines focused on the principal system requirements, tailored to the open deck environment.

15.14 Subsequently, the Sub-Committee agreed to the draft Guidelines for the approval of fixed fire detection and fire alarm systems for cabin balconies and the associated draft MSC circular, as set out in annex 11, for submission to MSC 83 for approval. In this regard, the Sub-Committee agreed that the approval of fixed pressure water-spraying and water-based fire-extinguishing systems for cabin balconies on passenger ships installed before 1 July 2008 should be left to the satisfaction of the Administration.

16 WORK PROGRAMME AND AGENDA FOR FP 52

Work programme and agenda for FP 52

16.1 The Sub-Committee revised its work programme (FP 51/WP.4) based on that approved by MSC 82 (FP 51/2/2, annex) and, taking into account the progress made during this session, prepared a draft revised work programme and draft provisional agenda for FP 52. While reviewing the work programme, the Sub-Committee agreed to invite the Committee to:

.1 delete the following work programme items, as work on them has been completed:

.1.1 item H.3 – Recommendation on evacuation analysis for new and existing passenger ships; and

.1.2 item H.11 – Performance standards for fixed water spraying, fire detection and fire alarm systems for cabin balconies;

.2 extend the target completion date of the following work programme items:

.2.1 item H.4 – Review of the SPS Code, to 2008;

.2.2	item H.5 –	Development of provisions for gas-fuelled ships, to 2009;	
.2.3	item H.7 –	Fire resistance of ventilation ducts, to 2009;	
.2.4	item H.8 –	Application of requirements for dangerous goods in SOLAS and the 2000 HSC Code, to 2008; and	
.2.5	item H.10 –	Review of fire safety of external areas on passenger ships, to 2009;	
.3	include the following new items in the Sub-Committee's work programme:		
.3.1	item H.13 –	Harmonization of the requirements for the location of entrances, air inlets and openings in the superstructures of tankers;	2 sessions
.3.2	item H.14 –	Review of the requirements for releasing controls and means of escape for spaces protected by fixed CO_2 systems;	2 sessions

.4 renumber the work programme items accordingly.

16.2 The Committee was invited to approve the draft revised work programme and draft provisional agenda for FP 52, as set out in annex 12.

Arrangements for the next session

16.3 The Sub-Committee agreed to establish, at its next session, working groups on the following subjects:

.1 performance testing and approval standards for fire safety systems;

.2 comprehensive review of the Fire Test Procedures Code; and

.3 review of fire safety of external areas on passenger ships,

and a drafting group on measures to prevent fires in engine-rooms and cargo pump-rooms.

16.4 The Sub-Committee established correspondence groups on the following subjects, due to report to FP 52:

.1 performance testing and approval standards for fire safety systems;

.2 comprehensive review of the Fire Test Procedures Code;

.3 measures to prevent fires in engine-rooms and cargo pump-rooms; and

.4 review of fire safety of external areas on passenger ships.

16.5 The Sub-Committee noted that its fifty-second session had been tentatively scheduled to take place from 14 to 18 January 2008, at a venue to be announced in due course.

17 ELECTION OF CHAIRMAN AND VICE-CHAIRMAN FOR 2008

17.1 In accordance with the Rules of Procedure of the Maritime Safety Committee, the Sub-Committee unanimously re-elected Mr. J.C. Cubisino (Argentina) as Chairman and Mr. C. Abbate (Italy) as Vice-Chairman, both for 2008.

18 ANY OTHER BUSINESS

Device to prevent passage of flame into cargo tanks

18.1 In considering documents FP 51/18 (Denmark) and FP 51/18/1 (IACS), which addressed matters related to device to prevent passage of flame into cargo tanks, the Sub-Committee, after discussion, in which the delegation of Denmark expressed the view that they did not agree with the IACS comment made in document FP 51/18/1 regarding the need for amendments to the Revised standards for the design, testing and locating of devices to prevent the passage of flame into cargo tanks in tankers (MSC/Circ.677), considered that the circular had adequately addressed this matter and agreed with the opinion expressed by Denmark.

Unified interpretations of SOLAS regulation II-2/10 and chapter 14 of the FSS Code

18.2 The Sub-Committee considered document FP 51/18/2 (Sweden), proposing a unified interpretation of the definition of cargo tank area in respect of SOLAS regulation II-2/10.8.1 (Fixed deck foam fire-extinguishing systems), and a statement by the delegation of the United Kingdom, in which they considered:

.1 whether CO_2 should be permitted as an extinguishing medium for such enclosed trunks; or

.2 guidance on whether piping or controls for the various extinguishing systems should be permitted within the trunk, noting that, according to SOLAS, control stations may not be located over cargo tanks and, if so, which systems should be operated without entering the trunk; and

.3 depending on the outcome of subparagraphs .1 and .2 above, whether duplication of the fire-extinguishing system coverage in the trunk should be required,

and agreed to refer this matter to the Correspondence Group on Performance Testing and Approval Standards for Fire Safety Systems, for detailed consideration (see paragraph 3.27).

Means of escape from machinery spaces

18.3 The Sub-Committee noted Denmark's intention (FP 51/18/3) to submit to MSC 83 a proposal for a new work programme item to amend SOLAS regulation II-2/13.4 on means of escape from machinery spaces since there have been serious accidents caused by fire where persons were not able to escape from rooms within machinery spaces because only one escape route from the room was provided.

Test laboratories recognized by the Administrations

18.4 The Secretariat informed the Sub-Committee that the latest annual FP circular on Test laboratories recognized by the Administrations had been published as FP.1/Circ.32 on 9 January 2006.

Halon banking and reception facilities

18.5 The Sub-Committee noted information provided by the Secretariat that the latest annual FP circular on Halon banking and reception facilities had been published as FP.1/Circ.33 on 9 January 2006.

19 ACTION REQUESTED OF THE COMMITTEE

19.1 The Maritime Safety Committee is invited to:

.1 approve the draft MSC circular on Amendments to the Revised Guidelines for the approval of equivalent water-based fire-extinguishing systems for machinery spaces and cargo pump-rooms (MSC/Circ.1165) (paragraph 3.17 and annex 1);

.2 approve the draft amendments to SOLAS regulation II-2/10, to require all carbon dioxide systems to have two separate releasing controls (paragraph 3.19 and annex 2);

.3 include, in the Sub-Committee's work programme, a new item, to review safety matters relating to the installation of total flooding carbon dioxide systems, taking into account the justification for the proposal for the new item (paragraph 3.20 and annex 3);

.4 adopt the draft MSC resolution on Amendments to the Revised Guidelines for approval of sprinkler systems equivalent to that referred to in SOLAS regulation II-2/12 (resolution A.800(19)) (paragraphs 3.24 and annex 4);

.5 approve the draft MSC circular on Guidelines for evacuation analysis for new and existing passenger ships (paragraph 5.10 and annex 5);

.6 include, in the Sub-Committee's work programme, a new item, to harmonize the requirements for the location of entrances, air inlets and openings in the superstructures of tankers, taking into account the justification for the proposal for the new item (paragraph 9.9 and annex 6);

.7 note the Sub-Committee's decision with regard to the MSC 82's instruction to consider the draft MSC circular on interpretation of SOLAS regulation II-2/4.5.1.1 concerning pump-rooms intended solely for ballast transfer or fuel oil transfer (paragraph 9.17);

.8 approve the draft MSC circular on Unified interpretations of SOLAS chapter II-2 (paragraphs 9.5 and 9.20.1 and annex 7);

.9 approve the draft MSC circular on Unified interpretations of the International Code for Fire Safety System (FSS Code) (paragraphs 9.6 and 9.20.2 and annex 8);

.10 approve the draft MSC circular on Unified interpretations of the International Bulk Chemical (IBC) Code (paragraph 9.5 and 9.20.3 and annex 9);

.11 consider the Sub-Committee's views and recommendations on issues related to oil and chemical tankers, including the proposal to include a new item in the Sub-Committee's work programme, and take action as appropriate (paragraphs 10.4 to 10.9);

.12 note the Sub-Committee's outcome with regard to the Committee's instruction to consider the DSC 10 concerning consequential amendments to SOLAS regulation II-2/19.3.6.1 (paragraph 12.4);

.13 approve the draft MSC circular on Guidelines for the approval of fixed pressure water spraying and water based fire-extinguishing systems for cabin balconies and endorse the Sub-Committee's recommendation that the approval of the aforementioned systems on passenger ships installed before 1 July 2008 should be left to the satisfaction of the Administration (paragraph 15.10 and annex 10);

.14 approve the draft MSC circular on Guidelines for the approval of fixed fire detection and fire alarm systems for cabin balconies and endorse the Sub-Committee's recommendation that the approval of the aforementioned systems on passenger ships installed before 1 July 2008 should be left to the satisfaction of the Administration (paragraph 15.14 and annex 11);

.15 approve the draft revised work programme of the Sub-Committee and the draft provisional agenda for FP 52 (paragraphs 16.2 and annex 12); and

.16 approve the report in general.

***

ANNEX 1

DRAFT MSC CIRCULAR

AMENDMENTS TO THE REVISED GUIDELINES FOR THE APPROVAL OF EQUIVALENT WATER-BASED FIRE-EXTINGUISHING SYSTEMS FOR MACHINERY SPACES AND CARGO PUMP-ROOMS (MSC/CIRC.1165)

1 The Committee, at its eightieth session (11 to 20 May 2005), after having considered the proposal by the forty-ninth session of the Sub-Committee on Fire Protection regarding review on the Guidelines for the approval of equivalent water-based fire-extinguishing systems as referred to in SOLAS 74 for machinery spaces and cargo pump-rooms (MSC/Circ.668 as amended by MSC/Circ.728), approved Revised Guidelines for the approval of equivalent water-based fire-extinguishing systems for machinery spaces and cargo pump-rooms contained in MSC/Circ.1165.

2 The Sub-Committee on Fire Protection, at its fifty-first session (5 to 9 February 2007), reviewed the Revised Guidelines for the approval of equivalent water-based fire-extinguishing systems for machinery spaces and cargo pump-rooms (MSC/Circ.1165) and, acknowledging figures 1, 2 and 3 in the Revised Guidelines did not clearly illustrate the recommended fire test configurations and spray fire locations, revised the aforementioned figures accordingly to clearly show the specified test arrangements.

3 The Committee, at its eighty-third session (3 to 12 October 2007), after having considered the above proposal, approved amendments to figures 1, 2 and 3 of the Revised Guidelines for the approval of equivalent water-based fire-extinguishing systems for machinery spaces and cargo pump-rooms (MSC/Circ.1165), as set out in the annex.

4 Member Governments are invited to apply the amendments to the Revised Guidelines when approving equivalent water-based fire-extinguishing systems for machinery spaces and pump-rooms and bring them to the attention of ship designers, shipowners, equipment manufacturers, test laboratories and other parties concerned.

ANNEX

AMENDMENTS TO THE REVISED GUIDELINES FOR THE APPROVAL OF EQUIVALENT WATER-BASED FIRE-EXTINGUISHING SYSTEMS FOR MACHINERY SPACES AND CARGO PUMP-ROOMS (MSC/CIRC.1165)

1 The existing figures 1, 2 and 3 are replaced by the following figures 1, 2 and 3, respectively:

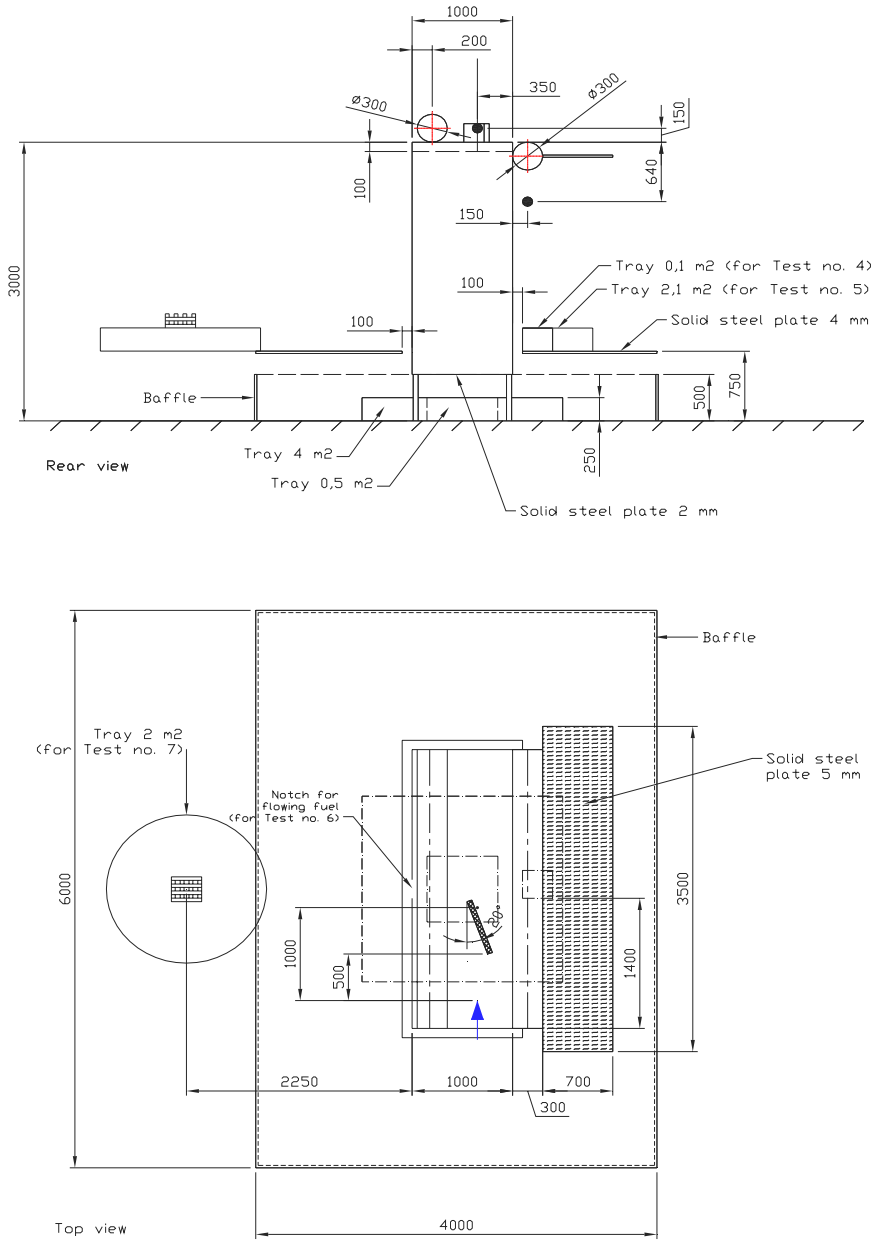

Figure 1

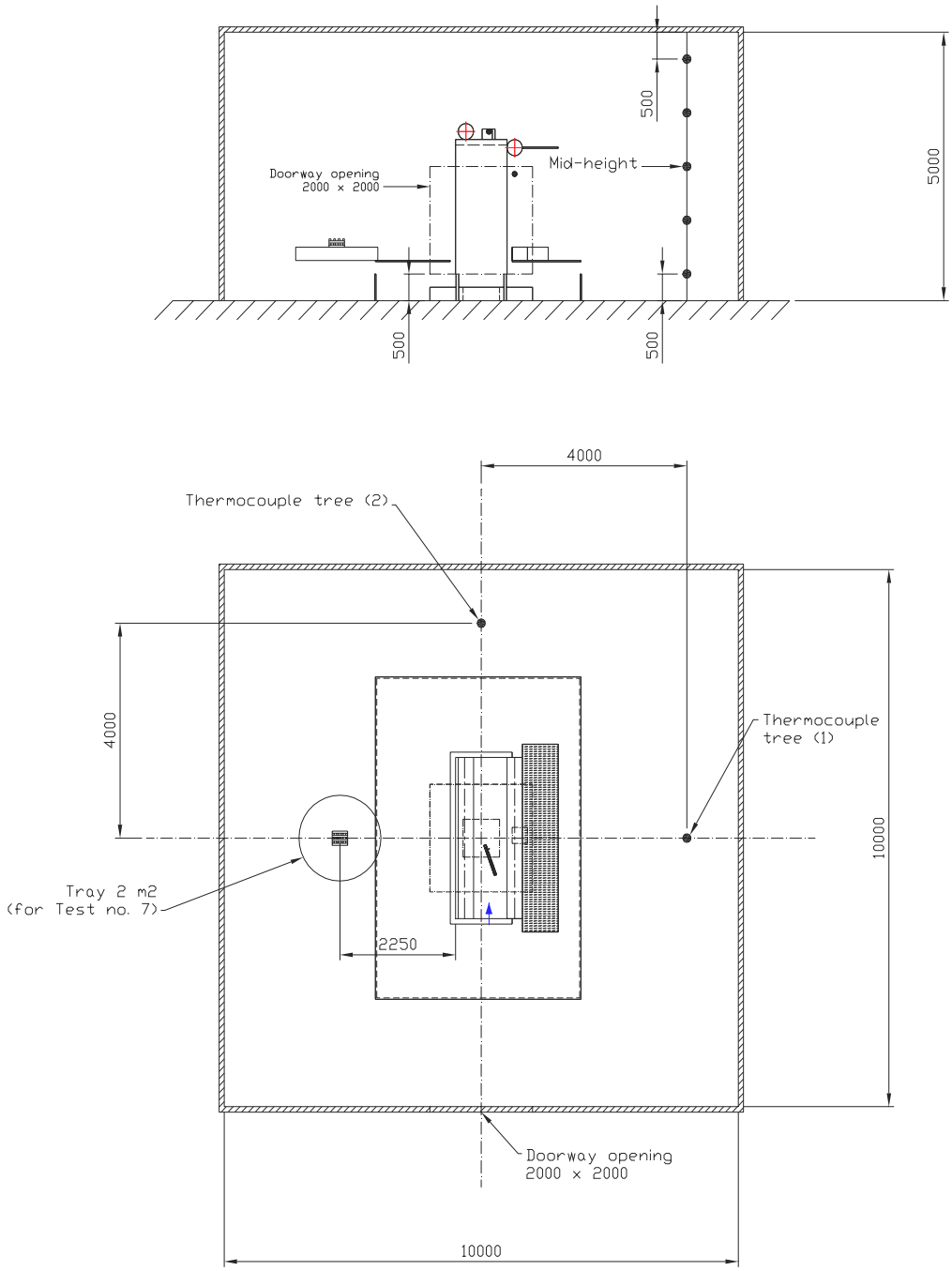
500
Mid-height
Doorway opening
2000 x 2000
5000
500
500
4000
Thermocouple tree (2)
4000
Thermocouple
tree (1)
10000
Tray 2 m2
(for Test no. 7)
2250
Doorway opening
2000 x 2000
10000

Figure 2

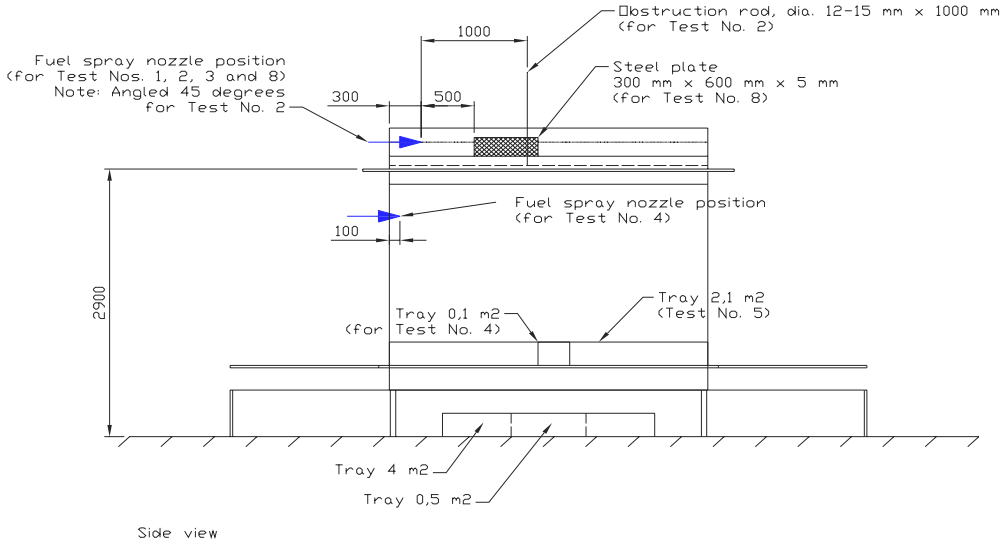
Obstruction rod, dia. 12-15 mm x 1000 mm
(for Test No. 2)
1000
Fuel spray nozzle position
(for Test Nos. 1, 2, 3 and 8)
Note: Angled 45 degrees
for Test No. 2
300
500
Steel plate
300 mm x 600 mm x 5 mm
(for Test No. 8)
Fuel spray nozzle position
(for Test No. 4)
100
2900
Tray 0,1 m2
(for Test No. 4)
Tray 2,1 m2
(Test No. 5)
Tray 4 m2
Tray 0,5 m2
Side view

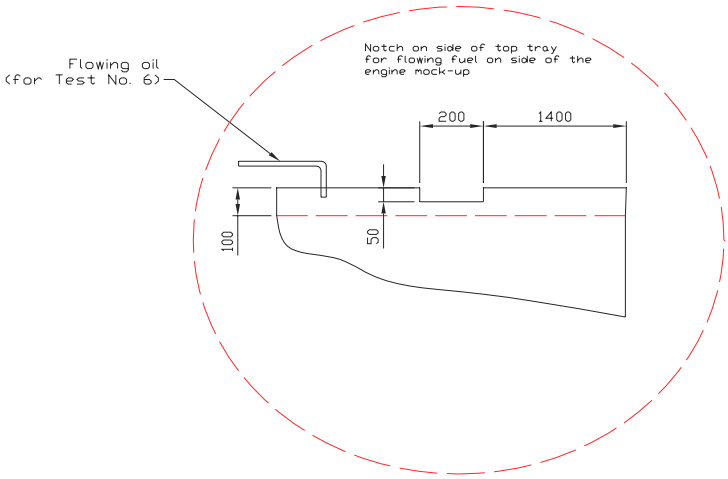
Flowing oil
(for Test No. 6)
Notch on side of top tray
for flowing fuel on side of the
engine mock-up
200
1400
100
50

Figure 3

***

ANNEX 2

DRAFT AMENDMENT TO SOLAS REGULATION II-2/10

CHAPTER II-2
CONSTRUCTION – FIRE PROTECTION, FIRE DETECTION AND FIRE EXTINCTION

Regulation 10 – Fire fighting

1 The following new paragraph 4.1.5 is added after the existing paragraph 4.1.4:

"4.1.5 By the first scheduled dry-docking after [1 July 2009], fixed carbon dioxide fire-extinguishing systems for the protection of machinery spaces and cargo pump-rooms on all ships shall comply with the provisions of paragraph 2.2.2 of chapter 5 of the Fire Safety Systems Code."

***

ANNEX 3

JUSTIFICATION FOR THE PROPOSAL FOR NEW WORK PROGRAMME ITEM (in accordance with MSC-MEPC.1/Circ.1)

PROPOSED AMENDMENTS TO SOLAS CHAPTER II-2 RELATED TO THE RELEASING CONTROLS AND MEANS OF ESCAPE FOR SPACES PROTECTED BY FIXED CARBON DIOXIDE SYSTEMS

1 Scope of the proposal

Examine and prepare amendments to SOLAS chapter II-2 to clarify the releasing control arrangements for carbon dioxide fire-extinguishing systems and recommend measures to ensure the means of escape provisions from protected spaces are adequate.

2 Compelling need

A new work programme item is necessary to enable the Sub-Committee to amend SOLAS chapter II-2 to include this vital crew safety information. Recent casualties have shown an apparent need for enhanced understanding of system operation along with uniform design criteria for the arrangement of releasing controls. In addition, means of escape provisions such as emergency lighting and evacuation way-finding aides are necessary for timely escape from the protected areas.

3 Analysis of the issues involved, having regard to the costs to the maritime industry and global legislative and administrative burdens

The continued safety to crew personnel is considered a significant concern in light of the potential for accidental release of carbon dioxide into manned spaces. There is expected to be a modest cost for the initial installation of the additional measures. Administrative and legal burdens are not expected to be impacted, since review and periodic inspection of carbon dioxide systems is already required by SOLAS.

4 Benefits

Crew safety will be greatly enhanced since the releasing controls will be standardized and escape aids will be provided.

5 Priority and target completion date

This matter should have a high priority since the issues have been an ongoing cause of concern for Administrations, recognized organizations and manufacturers. It is expected that two sessions will be needed to properly deal with this matter.

6 Specific indication of the action required

Amend SOLAS chapter II-2 to clarify the releasing control arrangements for carbon dioxide systems and recommend measures to ensure the means of escape provisions from protected spaces are adequate.

7 Remarks on the criteria for general acceptance

.1 The subject of the proposal is within the scope of IMO objectives.

.2 The item is within the relevant provisions of the Strategic plan for the Organization and the High-level action plan.

.3 Adequate industry standards do exist, but they are inconsistently applied.

.4 It is believed that the benefits do justify the proposed action.

8 Identification of which subsidiary bodies are essential to complete the work

The work should be able to be accomplished by the Sub-Committee on Fire Protection exclusively.

***

ANNEX 4

DRAFT MSC RESOLUTION
(adopted on …)

AMENDMENTS TO THE REVISED GUIDELINES FOR APPROVAL OF SPRINKLER SYSTEMS EQUIVALENT TO THAT REFERRED TO IN SOLAS REGULATION II-2/12 (RESOLUTION A.800(19))

THE MARITIME SAFETY COMMITTEE,

RECALLING Article 28(b) of the Convention on the International Maritime Organization concerning the functions of the Committee,

NOTING the significance of the performance and reliability of the sprinkler systems approved under provisions of regulation II-2/12 of the International Convention for the Safety of Life at Sea (SOLAS), 1974,

DESIROUS of keeping abreast of the advancement of sprinkler technology and further improving fire protection on board ships,

HAVING CONSIDERED, at its [eighty-third session], the text of the proposed amendments to the Revised Guidelines for approval of sprinkler systems equivalent to that referred to in SOLAS regulation II-2/12 (resolution A.800(19)),

1. ADOPTS the amendments to the Revised Guidelines for approval of sprinkler systems equivalent to that referred to in SOLAS regulation II-2/12 (resolution A.800(19)), the text of which is set out in the annex to the present resolution;

2. INVITES Governments to apply the amendments when approving equivalent sprinkler systems.

ANNEX

PROPOSED AMENDMENTS TO REVISED GUIDELINES FOR APPROVAL OF SPRINKLER SYSTEMS EQUIVALENT TO THAT REFERRED TO IN SOLAS REGULATION II-2/12 (RESOLUTION A.800(19))

3 Principle requirements for the system

1 The existing text of paragraph 3.3 is replaced by the following:

"3.3 The sprinkler system should be capable of continuously supplying the water-based extinguishing medium for a minimum of 30 min. A pressure tank or other means should be provided to meet the functional requirement stipulated in FSS Code, chapter 8, paragraph 2.3.2.1. The design of the system should ensure that full system pressure is available at the most remote nozzle in each section within 60 s of system activation."

2 The existing text of paragraph 3.8 is replaced by the following:

"3.8 There should be not less than two sources of power for the system. Where the sources of power for the pump are electrical, these should be a main generator and an emergency source of power. One supply for the pump should be taken from the main switchboard, and one from the emergency switchboard by separate feeders reserved solely for that purpose. The feeders should be so arranged as to avoid galleys, machinery spaces and other enclosed spaces of high fire risk except in so far as it is necessary to reach the appropriate switchboards, and should be run to an automatic changeover switch situated near the sprinkler pump. This switch should permit the supply of power from the main switchboard so long as a supply is available there from, and be so designed that upon failure of that supply it will automatically change over to the supply from the emergency switchboard. The switches on the main switchboard and the emergency switchboard should be clearly labelled and normally kept closed. No other switch should be permitted in the feeders concerned. One of the sources of power supply for the alarm and detection system should be an emergency source. Where one of the sources of power for the pump is an internal combustion engine, it should, in addition to complying with the provisions of FSS Code, paragraph 2.4.3.1, be so situated that a fire in any protected space will not affect the air supply to the machinery. Pump sets consisting of two diesel engines each supplying at least 50% of the required water capacity are considered acceptable if the fuel supply is adequate to operate the pumps at full capacity for a period of 36 h on passenger ships and 18 h on cargo ships."

3 The following text is added at the end of paragraph 3.9:

"The capacity of the redundant means should be sufficient to compensate for the loss of any single supply pump or alternative source. Failure of any one component in the power and control system should not result in a reduction of the automatic release capability or reduction of sprinkler pump capacity by more than 50%."

4 The existing text of paragraph 3.13 is replaced by the following:

"3.13 Each section of sprinklers should be capable of being isolated by one stop valve only. The stop-valve in each section should be readily accessible in a location outside of the associated section or in cabinets within stairway enclosures. The valve's location should be clearly and permanently indicated. Means should be provided to prevent the operation of the stop-valves by any unauthorized person. Isolation valves used for service, maintenance or for refilling of antifreeze solutions may be installed in the sprinkler piping in addition to the section stop valves, if provided with a means for giving a visual and audible alarm as required by paragraph 3.17. Valves on the pump unit may be accepted without such alarms if they are locked in the correct position."

5 The existing text of paragraph 3.15 is replaced by the following:

"3.15 The sprinkler system water supply components should be outside category A machinery spaces and should not be situation in any space required to be protected by the sprinkler system."

6 The following text is added to the end of paragraph 3.19:

"The maintenance instructions should include provisions for a flow test of each section at least annually to check for possible clogging or deterioration in the discharge piping."

7 The existing text of paragraph 3.22 is replaced by the following:

"3.22 Pumps and alternative supply components should be capable of supplying the flow rate and pressure needed for the space with the greatest hydraulic demand. For the purposes of this calculation, the design area used to calculate the required flow and pressure should be the deck area of the most hydraulically demanding space, separated from adjacent spaces by A-class/B-class divisions, up to a maximum of 280 m^2. The quantity of water needed for the atrium deluge system, if provided should/should not be included in the calculation. For application to a small ship, the Administration may specify the appropriate area for sizing of pumps and alternate supply components."

8 The following new paragraphs 3.23 to 3.27 are added after the existing paragraph 3.22:

"3.23 The nozzle location, type of nozzle, and nozzle characteristics should be within the tested limits determined by the fire test procedures in appendix 2 to provide fire control or suppression as referred to in paragraph 3.2.

3.24 For atria, theatres, restaurants and similar public spaces with ceiling heights greater than 5 m, a manually activated deluge system should be installed at the ceiling using open nozzles equivalent to those tested to the requirements of section 6 of annex 2, at a 5 m ceiling height. The deluge system should be divided into sections not exceeding 280 m^2. The manually operated section valves should comply with the criteria in paragraph 3.13, and the criteria for visual and audible alarms in paragraph 3.17. All enclosed spaces and any spaces beneath balconies or overhangs within the space should have automatic ceiling mounted nozzles. Spacing of nozzles within the atrium should be in accordance with the public space test requirements.

3.25 The system should be designed in such a way that during a fire occurrence, the level of protection provided to those spaces unaffected by fire is not reduced.

3.26 A quantity of spare water mist nozzles should be carried for all types and ratings installed on the ship as follows:

Total number of nozzles	Required number of spares
< 300	6
300 to 1000	12
> 1000	24

The number of spare nozzles of any type need not exceed the total number of nozzles installed of that type.

3.27 Any parts of the system which may be subjected to freezing temperatures in service should be suitably protected against freezing."

9 The following new paragraph 5.21.4 is added to appendix 1:

"5.21.4 Alternative supply arrangements to the apparatus shown in figure 3 may be used where damage to the pump is possible. Restrictions to piping defined by note 2 of table 5 should apply to such systems."

10 The existing text of appendix 2 is replaced by the following:

"**APPENDIX 2**

FIRE TEST PROCEDURES FOR WATER MIST SYSTEMS IN ACCOMMODATION, PUBLIC SPACES AND SERVICE AREAS ON PASSENGER SHIPS

1 Scope

1.1 These test procedures describe a fire test method for evaluating the effectiveness of water mist systems equivalent to systems covered by chapter 8 of the FSS Code in accommodation and service areas on board ships. It should be noted that the test method is limited to the systems' effectiveness against fire and is not intended for testing of the quality and design parameters of the individual components of the system.

1.2 In order to fulfil the requirements of paragraph 3.5 of the guidelines, the system should be capable of fire control or suppression in a wide variety of fire loading, fuel arrangement, room geometry and ventilation conditions.

1.3 Products employing materials or having forms of construction differing from the requirements contained herein may be examined and tested in accordance with the intent of the requirements and, if found to be substantially equivalent, may be judged to comply with the document.

1.4 Products complying with the text of this document will not necessarily be judged to comply, if, when examined and tested, they are found to have other features which impair the level of safety contemplated by this document.

2 Hazard and occupancy classification

For the purposes of identifying the different fire risk classifications, table 1 is given, which correlates the fire tests with the classification of occupancy defined in SOLAS regulations II-2/9.2.2.3 and II-2/9.2.2.4:

Table 1 – Correlation between fire tests with the classification of occupancy defined in SOLAS regulations II-2/9.2.2.3 and II-2/9.2.2.4

	Corresponding fire test			
Occupancy classification	**Section 5 cabin**	**Section 5 corridor**	**Section 6 public spaces**	**Section 8 storage**
(1) Control stations			X	
(2) Stairways		X[1]		
(3) Corridors		X[1]		
(6) Accommodation spaces of minor fire risk	X[2]		X[3]	
(7) Accommodation spaces of moderate fire risk	X[2]		X[3, 4]	
(8) Accommodation spaces of greater fire risk			X[3, 4]	
(9) Sanitary & similar spaces	X[2]		X[3]	
(11) Refrigerated chambers			X	
(12) Main galleys and annexes			X	
(13) Store rooms, workshops, pantries, etc.				X
(14) Other spaces in which flammable liquids are stowed				X

Notes:

1 For corridors and stairways wider than 1.5 m, use section 6 public space fire test instead of the corridor fire test.
2 For spaces up to the area of the cabin applied in tests of section 5.
3 For spaces over the area of the cabin applied in tests of section 5.
4 Refer to annex, paragraph 3.24.

3 Definitions

3.1 *Fire suppression:* sharply reducing the heat release rate of a fire and preventing its re-growth by means of a direct and sufficient application of water through the fire plume to the burning fuel surface.

3.2 *Fire control:* limiting the size of a fire by distribution of water so as to decrease the heat release rate and pre-wet adjacent combustibles, while controlling ceiling gas temperatures to avoid structural damage.

3.3 *Fire source:* fire source is defined as the combustible material in which the fire is set and the combustible material covering walls and ceiling.

3.4 *Igniter:* the device used to ignite the fire source.

4 General requirements

4.1 Nozzle positioning

These test procedures are applicable to either overhead nozzles installed on the ceiling, or sidewall nozzles installed on bulkheads below the ceiling. Separate approval tests should be conducted for each nozzle type. The testing organization should be responsible for assuring that the nozzles for each fire test are installed in accordance with the manufacturer's design and installation instructions. The tests should be performed at the maximum specified spacings, installation height and distances below the ceiling. In addition, if the testing organization finds it necessary, selected fire tests should also be conducted at minimum specified spacings, installation height and distances below the ceiling. Where two types of nozzles are installed in the same area, an overlap of the different nozzle spray patterns should be provided equal to at least one half of the maximum approved nozzle spacing.

4.2 Water pressure and flow rates

The testing organization should be responsible for assuring that all fire tests are conducted at the operating pressure and flow rates specified by the manufacturer.

For all tests, the system should either be:

.1 pressurised to the minimum operating pressure specified by the manufacturer. Upon activation of the first nozzle, the flowing water pressure should be maintained at the minimum system operating pressure; or

.2 pressurised to the minimum stand-by pressure specified by the manufacturer. Upon activation of the first nozzle, the flowing water pressure should be gradually increased to the minimum system operating pressure, specified by the manufacturer. The delay time until the minimum system operating pressure is reached should be at least 15 s. The delay time recorded during the tests should be documented and included in the approval of the system.

4.3 Temperature measurements

Temperatures should be measured as described in detail under each chapter. Chromelalumel thermocouple wires not exceeding 0.5 mm in diameter welded together should be used. The temperatures should be measured continuously, at least every two seconds, throughout the tests.

4.4 Environmental conditions

The test hall should have an ambient temperature of between 10ºC and 30ºC at the start of each test.

4.5 Tolerances

Unless otherwise stated, the following tolerances should apply:

.1	Length	± 2 % of value
.2	Volume	± 5 % of value
.3	Pressure	± 3 % of value
.4	Temperature	± 5 % of value

These tolerances are in accordance with ISO Standard 6182-1:1994.

4.6 Observations

The following observations should be made during and after each test:

.1 time of ignition;

.2 activation time of each nozzle;

.3 time when water flow is shut off;

.4 damage to the fire source;

.5 temperature recordings;

.6 system flow rate and pressure; and

.7 total number of operating nozzles.

4.7 Fire sources

If the requirements for fire sources specified in the following sections of this test method cannot be fulfilled, it is the responsibility of the test laboratory to show that alternative materials used have burning characteristics similar to those of specified materials.

4.8 Product and documentation requirements

The fire test report should identify the critical parameters to be incorporated into the design, installation and operating instruction manual.

The instruction manual should reference the limitations of each device and should include at least the following items:

.1 description and operating details of each device and all accessory equipment, including identification of extinguishing system components or accessory equipment by part or model number;

.2 nozzle design recommendation and limitations for each fire type;

.3 type and pressure rating of pipe, tubing and fittings to be used;

.4 equivalent length values of all fittings and all system components through which water flows;

.5 discharge nozzle limitations, including maximum dimensional and area coverage, minimum mad maximum installation height limitations, and nozzle permitted location in the protected volume;

.6 range of filling capacities for each size storage container;

.7 details for the proper installation of each device, including all component equipment;

.8 reference to the specific types of detection and control panels (if applicable) to be connected to the equipment;

.9 operating pressure ranges of the system;

.10 method of sizing pipe or tubing;

.11 recommended orientation of tee fittings and the splitting of flows through tees; and

.12 maximum difference in operating (flowing) pressure between the hydraulically closest and most remote nozzle.

5 Cabin and corridor tests

5.1 Test arrangement

5.1.1 The fire tests should be conducted in a 3 m x 4 m, 2.5 m high cabin connected to the centre of a 1.5 m x 12 m long corridor, 2.5 m high with both ends open. The cabin area may be increased up to the maximum size to be protected with one nozzle. The disabled nozzle test should be conducted in a 3 m x 4 m cabin.

5.1.2 The cabin should be fitted with one doorway opening, 0.8 m wide and 2.2 m high, which provides for a 0.2 m lintel above the opening

5.1.3 The walls of the cabin should be constructed from an inner layer of nominally 12 mm thick non-combustible wall board with a nominally 45 mm thick mineral wool liner. The walls and ceiling of the corridor and ceiling of the cabin should be constructed of nominally 12 mm thick non-combustible wall boards. The cabin may be provided with a window in the wall opposite the corridor for observation purposes during the fire tests.

5.1.4 The cabin and corridor ceiling should be covered with cellulosic acoustical panels. The acoustical panels should be nominally 12 mm to 15 mm thick and should not ignite when tested in accordance with IMO resolution A.653(16).

5.1.5 Plywood panels should be placed on the cabin and corridor walls. The panels should be approximately 3 mm thick. The ignition time of the panel should be not more than 35 s and the flame spread time at 350 mm position should not be more than 100 s as measured in accordance with IMO resolution A.653(16).

5.2 Instrumentation

During each fire test, the following temperatures should be measured using thermocouples of diameter not exceeding 0.5 mm:

.1 the ceiling surface temperature above the ignition source in the cabin should be measured with a thermocouple embedded in the ceiling material from above such that the thermocouple bead is flush with the ceiling;

.2 the ceiling gas temperature should be measured with a thermocouple 75±1 mm below the ceiling in the centre of the cabin;

.3 the ceiling surface temperature in the centre of the corridor, directly opposite the cabin doorway, should be measured with a thermocouple embedded in the ceiling material such that the thermocouple bead is flush with the ceiling (figure 1); and

.4 the ceiling surface temperature directly above the corridor test fire source (if used) described in paragraph 5.4.2 should be measured with a thermocouple embedded in the ceiling material such that the thermocouple bead is flush with the ceiling surface.

5.3 Nozzle positioning

The nozzles should be installed to protect the cabin and corridor in accordance with the manufacturer's design and installation instructions subject to the following:

.1 if only one ceiling nozzle is installed in the cabin, it may not be placed in the shaded area in figure 2;

.2 if two or more ceiling nozzles are installed in the cabin the nominal water flux density should be homogeneously distributed throughout the cabin;

.3 corridor nozzles should not be placed closer to the centreline of the cabin doorway than one half the maximum spacing recommended by the manufacturer. An exception is systems where nozzles are required to be placed outside each doorway; and

.4 cabin mounted sidewall nozzles should be installed on the centreline of the front wall of the cabin adjacent to the doorway, aimed towards the rear of the cabin.

5.4 Fire sources

5.4.1 Cabin test fire source

Two pullman-type bunk beds having an upper and lower berth should be installed along the opposite side walls of the cabin (figure 1). Each bunk bed should be fitted with 2 m by 0.8 m by 0.1 m polyether mattresses having a cotton fabric cover. Pillows measuring 0.5 m by 0.8 m by 0.1 m should be cut from the mattresses. The cut edge should be positioned towards the doorway. A third mattress should form a backrest for the lower bunk bed. The backrest should be attached in an upright position in a way that prevents it from falling over (figure 3).

The mattresses should be made of non-fire retardant polyether and they should have a density of approximately 33 kg/m^3. The cotton fabric should not be fire retardant treated and it should have an area weight of 140 g/m^2 to 180 g/m^2. When tested according to ISO Standard 5660-1:2002 (ASTME-1354), the polyether foam should give results as given in the table below. The frame of the bunk beds should be of steel nominally 2 mm thick.

ISO STANDARD 5660, Cone calorimeter test

Test conditions: Irradiance 35 kW/m^2. Horizontal position.
Sample thickness 50 mm. No frame retainer should be used

Test results	**Foam**
Time to ignition (s)	2-6
3 minute average HRR, q_{180} (kW/m^2)	270±50
Minimum heat of combustion (MJ/kg)	25
Total heat release (MJ/m^2)	50±12

5.4.1 Corridor test fire source

The corridor fire tests should be conducted using eight piled polyether mattress pieces measuring 0.4 m x 0.4 m x 0.1 m, as specified in paragraph 5.4.1, without fabric covers. The pile should be placed on a stand, 0.25 m high, and in a steel test basket to prevent the pile from falling over (figure 4).

5.5 Test method

The following series of fire tests should be performed with automatic activation of the nozzle(s) installed in the cabin and/or corridor as indicated. Each fire should be ignited using an igniter made of some porous material, e.g., pieces of insulating fibreboard. The igniter may be either square or cylindrical, 60 mm square or 75 mm in diameter. The length should be 75 mm. Prior to the test the igniter should be soaked in 120 m*l* of heptane and positioned as indicated for each cabin fire test. For the corridor fire tests, the igniter should be located in the centre at the base of the pile of the mattress pieces, and on one side of the test stand at the base of the pile of mattress pieces:

.1 lower bunk bed test. Fire arranged in one lower bunk bed and ignited with the igniter located at the front (towards door) centreline of the pillow;

.2 upper bunk bed test. Fire arranged in one upper bunk bed with the igniter located at the front (towards door) centreline of the pillow;

.3 arsonist test;

.4 disabled nozzle test. The nozzle(s) in the cabin should be disabled. Fire arranged in one lower bunk bed and ignited with the igniter located at the front (towards door) centreline of the pillow. If nozzle(s) in the cabin are linked with nozzle(s) in the corridor such that a malfunction would affect them all, all cabin and corridor nozzles linked should be disabled;

.5 corridor test. Fire source located against the wall of the corridor under one nozzle; and

.6 corridor test. Fire source located against the wall of the corridor between two nozzles.

The fire tests should be conducted for 10 min after the activation of the first nozzle, and any remaining fire should be extinguished manually.

5.6 Acceptance criteria

Based on the measurements, a maximum 30 s average value should be calculated for each measuring point which forms the temperature acceptance criteria.

Acceptance criteria for the cabin and corridor tests

		Maximum 30 s average ceiling surface temperature in the cabin (ºC)	Maximum 30 s average ceiling gas temperature in the cabin (ºC)	Maximum 30 s average ceiling surface temperature in the corridor (ºC)	Maximum acceptable damage on mattresses (%)		Other criteria
					Lower bunk	Upper bunk	
Cabin tests	**Lower bunk bed**	360	320	120	40	10	No nozzles in corridor allowed to operate[3]
	Upper bunk bed				N.A.	40	
	Arsonist	N.A.	N.A.	120	N.A.	N.A.	N.A.
Corridor tests		N.A.	N.A.	120[1]	N.A.		Only two Independent and adjacent nozzles in corridor allowed to operate[4]
Disabled nozzle		N.A.	N.A.	400[2]	N.A.		N.A.

Notes:

1 In each test, the temperature should be measured above the fire source.
2 The fire is not allowed to propagate along the corridor beyond the nozzles closest to the door opening.
3 Not applicable, if cabin nozzle(s) are linked to corridor nozzle(s).
4 Not applicable, if corridor nozzle(s) are linked together.

N.A. means not applicable

5.7 After the test, the fire sources should be examined visually to determine compliance with the required maximum damage. The damages should be estimated using the following formula:

.1 damage to lower bunk bed = (damage to horizontal mattress (%) + 0.25 x damage to pillow (%) + damage to backrest (%))/2.25;

.2 damage to upper bunk bed = (damage to horizontal mattress (%) + 0.25 x damage to pillow (%))/1.25; and

.3 if it is not clearly obvious by visual examination whether the criteria are fulfilled or not, the test should be repeated.

6 Public space fire tests

6.1 Test arrangements

The fire tests should be conducted in a well-vented building under a ceiling of at least 80 m^2 in area with no dimension less than 8 m. There should be at least a 1 m space between the perimeters of the ceiling and any wall of the test building. The ceiling height should be set at 2.5 m and 5.0 m respectively.

Two different tests should be conducted as per paragraphs 6.1.1 and 6.1.2.

6.1.1 *Open public space test*

The fire source should be positioned under the centre of the open ceiling so that there is an unobstructed flow of gases across the ceiling. The ceiling should be constructed from a non-combustible material. At least 1 m^2 of the ceiling just above ignition should be covered with acoustical panels. The acoustical panels should be nominally 12 mm to 15 mm thick, and should not ignite when tested in accordance with IMO resolution A.653(16).

6.1.2 *Corner public space test*

The test should be conducted in a corner constructed by two at least 3.6 m wide, nominally 12 mm thick, non-combustible wall boards.

Plywood panels should be placed on the walls. The panels should be 3 to 4 mm thick. The ignition time of the panel should not be more than 35 s and the flame spread time at 350 mm position should not be more than 100 s measured in accordance with IMO resolution A.653(16).

The ceiling should be covered, 3.6 m out from the corner, with cellulosic acoustical panels. The acoustical panels should be nominally 12 mm to 15 mm thick, and should not ignite when tested in accordance with IMO resolution A.653(16).

6.2 Instrumentation

During each fire test, the following temperatures should be measured using thermocouples with diameter not exceeding 0.5 mm.

6.2.1 *Open public space test*

.1 the ceiling surface temperature above the ignition source should be measured using a thermocouple embedded in the ceiling material such that the thermocouple bead is flush with the ceiling surface; and

.2 The ceiling gas temperature should be measured using a thermocouple located 75±1 mm below the ceiling 1.8 m from ignition.

6.2.2 *Corner public space test*

.1 The ceiling surface temperature above the ignition source should be measured using a thermocouple embedded in the ceiling material such that the thermocouple bead is flush with the ceiling surface.

.2 The ceiling gas temperature should be measured using a thermocouple located 75±1 mm below the ceiling within 0.2 m horizontally from the closest nozzle to the corner.

6.3 Nozzle positioning

For nozzles with frame arms, tests should be conducted with the frame arms positioned both perpendicular and parallel with the edges of the ceiling or corner walls. For nozzles without framed arms, the nozzles should be oriented so that the lightest discharge density will be directed towards the fire area.

6.4 Fire sources

6.4.1 *Open public space*

The fire source should consist of four sofas made of mattresses as specified in section 5.4.1 installed in steel frame sofas. The steel frames for the sofas should consist of rectangular bottom and backrest frames constructed of 25±2 mm square iron of normally 2 mm thickness. The dimensions of the bottom frame should be 2000 mm x 700 mm and the dimensions of the backrest frame should be 2000 mm x 725 mm. The seat and backrest mattresses should be supported on each frame by three vertical and one horizontal steel bar, constructed from similar steel stock. The vertical steel bars should be spaced every 500 mm and welded to the inner long sides of the frame. The horizontal steel bar should be welded to the inner short sides of the frame. Both steel frames should be fitted with a 150 mm by 150 mm steel plate, nominally 2 mm thick. The steel plate should be positioned directly under and behind the intended position of the igniter, in order to prevent it from falling to the floor under a test. Each sofa should have a rectangular armrest on each end. The armrest should be constructed of similar steel stock and should be 600 mm in length and 300 mm in height. The front section of the armrest should be attached to the bottom frame 70 mm from the backrest frame. The assembled frames should be supported by four legs constructed of similar steel stock. The two rear legs should be 205 mm in height and the front legs should be 270 mm in height. When installed, mattress forming the seat should be installed first, with its long side edge close up against the backrest frame. The mattress forming the backrest should be installed thereafter. This mattress should be kept in upright position by four hooks, two on the short sides and two on the long sides of the backrest frame. The hooks should be constructed from nominally 50 mm flat iron bars, of nominally 2 mm thickness. The sofas should be positioned as shown in figure 7, with the top of the backrests spaced 25 mm apart. One of the middle sofas should be ignited, centrically and at the bottom of the backrest, with an igniter as described in section 5.5.

6.4.2 *Corner public space test*

The fire source should consist of a sofa, as specified in 6.4.1, placed with the backrest 25 mm from the right-hand wall and close up to the left-hand wall. A target sofa should be placed along

the right-hand wall with the seat cushion 0.1 m from the first sofa and another target sofa should be placed 0.5 m from it on the left hand side. The sofa should be ignited using an igniter, as described in 5.5, that should be placed at the far left of the corner sofa, at the base of the backrest, near the left-hand wall (figure 8).

6.5 Test method

The fire tests should be conducted for 10 min after the activation of the first nozzle, and any remaining fire should be extinguished manually.

6.5.1 *Open public space tests*

Fire tests should be conducted with the ignition centred under one, between two and below four nozzles. An additional test should be conducted with the ignition centred under a disabled nozzle.

6.5.2 *Corner public space test*

The fire tests should be conducted with at least four nozzles arranged in a 2 x 2 matrix.

6.6 Acceptance criteria

Based on the measurements, a maximum 30 s average value should be calculated for each measuring point which forms the temperature acceptance criteria.

6.6.1 *Acceptance criteria for the public space tests*

		Maximum 30 s average ceiling surface temperature (ºC)	**Maximum 30 s average ceiling gas temperature (ºC)**	**Maximum acceptable Damage on mattresses (%)**
Open space	**normal**	360	220[2]	50/35[1]
	disabled nozzle	N.A.	N.A.	70
Corner		360	220	50/35[1] (ignition sofa) no charring of target sofas

Notes:

1 50% is the upper limit for any single test. 35% is the upper limit for the average of the public space tests required in 6 at each ceiling height (excluding the disabled sprinkler test).

2 The gas temperature should be measured at four different positions and the evaluation of the results is based on the highest reading.

N.A. means not applicable.

7 Storage area fire tests

7.1 Test arrangements

As specified in paragraph 6.1, but with 2.5 m ceiling height only.

7.2 Instrumentation

No temperature measurements are required.

7.3 Nozzle positioning

As per 6.3.

7.4 Fire source

The fire source should consist of two central, 1.5 m high, solid piled stacks of cardboard boxes packed with polystyrene unexpanded plastic cups with a 0.3 m flue space. Each stack should be approximately 1.6 m long and 1.1 m to 1.2 m wide.

A suitable plastic commodity is the FMRC standard plastic commodity. Similar commodities might be used if they are designed in a similar way and are proven to have the same burning characteristics and suppressability.

The fire source should be surrounded by six 1.5 m high solid piled stacks of empty cardboard boxes forming a target array to determine if the fire will jump the aisle. The boxes should be attached to each other, for example by staples, to prevent them from falling over (figure 9).

7.5 Test method

Fire tests should be conducted with the ignition centred under one, between two and below four nozzles.

Each fire should be ignited using two igniters as described in 5.5. The igniters should be placed on the floor, each against the base of one of the two central stacks and ignited simultaneously.

The fire tests should be conducted for 10 min after the activation of the first nozzle, and any remaining fire should be extinguished manually.

7.6 Acceptance criteria

.1 No ignition or charring of the target cartons is allowed.

.2 No more than 50% of the cartons filled with plastic cups should be consumed.”

***

ANNEX 5

DRAFT MSC CIRCULAR

GUIDELINES FOR EVACUATION ANALYSIS FOR NEW AND EXISTING PASSENGER SHIPS

1 The Maritime Safety Committee, at its seventy-first session (19 to 28 May 1999), having approved MSC/Circ.909 on Interim Guidelines for a simplified evacuation analysis of ro-ro passenger ships as a guide for the implementation of SOLAS regulation II-2/28-1.3, requested the Sub-Committee on Fire Protection (FP) to also develop guidelines on evacuation analysis for passenger ships in general and high-speed passenger craft.

2 The Committee, at its seventy-fourth session (30 May to 8 June 2001), following a recommendation of the forty-fifth session of the FP Sub-Committee, approved MSC/Circ.1001 on Interim Guidelines for a simplified evacuation analysis of high-speed passenger craft. The Committee, at its eightieth session (11 to 20 May 2005), after having considered a proposal by the forty-nine session of the Sub-Committee on Fire Protection made in light of the experienced gained in the application of the aforementioned Interim Guidelines, approved MSC/Circ.1166 on Guidelines for a simplified evacuation analysis of high-speed passenger craft, which supersede MSC/Circ.1001, together with the worked example appended thereto.

3 The Committee, at its seventy-fifth session (15 to 24 May 2002), further approved MSC/Circ.1033 on Interim Guidelines on evacuation analyses for new and existing passenger ships and invited Member Governments to collect and submit to the Sub-Committee on Fire Protection for further consideration, any information and data resulting from research and development activities, full-scale tests and findings on human behaviour which may be relevant for the necessary future upgrading of the present Interim Guidelines.

4 The Committee, at its [eighty-third session (… to … October 2007)], approved the Guidelines on evacuation analyses for new and existing passenger ships, including ro-ro passenger ships, as set out in the annexes to the present circular.

5 The annexed Guidelines offer the possibility of using two distinct methods:

.1 a simplified evacuation analysis (annex 1); and/or

.2 an advanced evacuation analysis (annex 2).

6 The assumptions inherent within the simplified method are by their nature limiting. As the complexity of the vessel increases (through the mix of passenger types, accommodation types, number of decks and number of stairways) these assumptions become less representative of reality. In such cases, the use of the advanced method would be preferred. However, in early design iterations of the vessel, the simplified method has merit due to its relative ease of use and its ability to provide an approximation to expected evacuation performance.

7 It is also to be noted that the acceptable evacuation times in these Guidelines are based on an analysis of fire risk.

8 Member Governments are invited to bring the annexed Guidelines (annexes 1 and 2) to the attention of all those concerned and, in particular to:

.1 recommend them to use these Guidelines when conducting evacuation analyses on new ro-ro passenger ships in compliance with SOLAS regulation II-2/28-1.3 and regulation II-2/13.7.4 (which entered into force on 1 July 2002); and

.2 encourage them to conduct evacuation analyses on new and existing passenger ships other than ro-ro passenger ships using these Guidelines.

9 Member Governments are also encouraged to:

.1 collect and submit to the Sub-Committee on Fire Protection for further consideration, any information and data resulting from research and development activities, full-scale tests and findings on human behaviour, which may be relevant for the necessary future upgrading of the present Guidelines;

.2 submit to the Sub-Committee on Fire Protection information on experience gained in the implementation of the Guidelines; and

.3 use the Guidance on validation/verification of evacuation simulation tools provided in annex 3 to the present circular when assessing the ability of evacuation simulation tools to perform an advanced evacuation analysis.

10 This circular supersedes MSC/Circ.1033.

ANNEX 1

GUIDELINES FOR A SIMPLIFIED EVACUATION ANALYSIS FOR NEW AND EXISTING PASSENGER SHIPS

Preamble

1 The following information is provided for consideration by, and guidance to, the users of these Guidelines:

.1 To ensure uniformity of application, typical benchmark scenarios and relevant data are specified in the Guidelines. Therefore, the aim of the analysis is to assess the performance of the ship with regard to the benchmark scenarios rather than simulating an actual emergency.

.2 Although the approach is, from a theoretical and mathematical point of view, sufficiently developed to deal with realistic simulations of evacuation onboard ships, there is still a shortfall in the amount of verification data and practical experience on its application. When suitable information is provided by Member Governments, the Organization should reappraise the figures, parameters, benchmark scenarios and performance standards defined in the Interim Guidelines.

.3 Almost all the data and parameters given in the Guidelines are based on well-documented data coming from civil building experience. The data and results from ongoing research and development show the importance of such data for improving the Interim Guidelines. Nevertheless, the simulation of these benchmark scenarios are expected to improve ship design by identifying inadequate escape arrangements, congestion points and optimising evacuation arrangements, thereby significantly enhancing safety.

2 For the above considerations, it is recommended that:

.1 the evacuation analysis be carried out as indicated in the Guidelines, in particular using the scenarios and parameters provided;

.2 the objective should be to assess the evacuation process through benchmark cases rather than trying to model the evacuation in real emergency conditions;

.3 application of the Guidelines to analyse actual events to the greatest extent possible, where passengers were called to assembly stations during a drill or where a passenger ship was actually evacuated under emergency conditions, would be beneficial in validating the Guidelines;

.4 the aim of the evacuation analysis for existing passenger ships should be to identify congestion points and/or critical areas and to provide recommendations as to where these points and critical areas are located on board; and

.5 keeping in mind that it is the ship owner's responsibility to ensure passenger and crew safety by means of operational measures, if the result of an analysis, conducted on an existing passenger ship shows that the maximum allowable evacuation time has been exceeded, then the shipowner should ensure that suitable operational measures (e.g., updates of the onboard emergency procedures, improved signage, emergency preparedness of the crew, etc.) are implemented.

1 General

1.1 The purpose of this part of the Guidelines is to present the methodology for conducting a simplified evacuation analysis and, in particular, to:

.1 identify and eliminate, as far as practicable, congestion which may develop during an abandonment, due to normal movement of passengers and crew along escape routes, taking into account the possibility that crew may need to move along these routes in a direction opposite the movement of passengers; and

.2 demonstrate that escape arrangements are sufficiently flexible to provide for the possibility that certain escape routes, assembly stations, embarkation stations or survival craft may be unavailable as a result of a casualty.

2 Definitions

2.1 *Persons load* is the number of persons considered in the means of escape calculations contained in chapter 13 of the Fire Safety Systems (FSS) Code (resolution MSC.98(73)).

2.2 *Awareness time (A)* is the time it takes for people to react to the situation. This time begins upon initial notification (e.g. alarm) of an emergency and ends when the passenger has accepted the situation and begins to move towards an assembly station.

2.3 *Travel time (T)* is defined as the time it takes for all persons on board to move from where they are upon notification to the assembly stations and then on to the embarkation stations.

2.4 *Embarkation time (E) and launching time (L),* the sum of which defines the time required to provide for abandonment by the total number of persons on board.

3 Method of evaluation

The steps in the evacuation analysis specified as below.

3.1 ***Description of the system:***

.1 Identification of assembly stations.

.2 Identification of escape routes.

3.2 Assumptions

This method of estimating evacuation time is basic in nature and, therefore, common evacuation analysis assumptions should be made as follows:

.1 all passengers and crew will begin evacuation at the same time and will not hinder each other;

.2 passengers and crew will evacuate via the main escape route, as referred to in SOLAS regulation II-2/13;

.3 initial walking speed depends on the density of persons, assuming that the flow is only in the direction of the escape route, and that there is no overtaking;

.4 passenger load and initial distribution are assumed in accordance with chapter 13 of the FSS Code;

.5 full availability of escape arrangements is considered, unless otherwise stated;

.6 people can move unhindered;

.7 counterflow is accounted for by a counterflow correction factor; and

.8 effects of ship's motions, passenger age and mobility impairment, flexibility of arrangements, unavailability of corridors, restricted visibility due to smoke, are accounted for in a correction factor and a safety factor. The safety factor has a value of 1.25.

3.3 *Scenarios to be considered*

3.3.1 As a minimum, four scenarios (cases 1, 2, 3 and 4) should be considered for the analysis as follows:

.1 case 1 (primary evacuation case, night) and case 2 (primary evacuation case, day) in accordance with chapter 13 of the FSS Code; and

.2 cases 3 and 4 (secondary evacuation cases). In these cases only the main vertical zone, which generates the longest travel time, is further investigated. These cases utilize the same population demographics as in case 1 (for case 3) and as in case 2 (for case 4). The following are two alternatives that should be considered for both case 3 and case 4. Alternative 1 should be considered if possible:

.2.1 alternative 1: one complete run of the stairways having largest capacity previously used within the identified main vertical zone is considered unavailable for the simulation; or

.2.2 alternative 2: 50% of the persons in one of the main vertical zones neighbouring the identified main vertical zone are forced to move into the zone and to proceed to the relevant assembly. The neighbouring zone with the largest population should be selected.

3.3.2 If the total number of persons on board calculated, as indicated in the above cases, exceeds the maximum number of persons the ship will be certified to carry, the initial distribution of people should be scaled down so that the total number of persons is equal to what the ship will be certified to carry.

3.3.3 Additional relevant scenarios may be considered as appropriate.

3.4 ***Calculation of the evacuation time***

The following components should be considered:

.1 awareness time (A) should be 10 min for the night time scenarios and 5 min for the day time scenarios;

.2 method to calculate the travel time (T) is given in appendix 1; and

.3 embarkation time (E) and launching time (L).

3.5 ***Performance standards***

3.5.1 The following performance standards, as illustrated in figure 3.5.3, should be complied with:

Calculated total evacuation time: $1.25\ (A + T) + 2/3\ (E + L) \leq n$ (1)

$E + L \leq 30$ min (2)

3.5.2 In performance standard (1):

.1 for ro-ro passenger ships, $n = 60$; and

.2 for passenger ships other than ro-ro passenger ships, $n = 60$ if the ship has no more than three main vertical zones; and 80, if the ship has more than three main vertical zones.

3.5.3 Performance standard (2) complies with SOLAS regulation III/21.1.4.

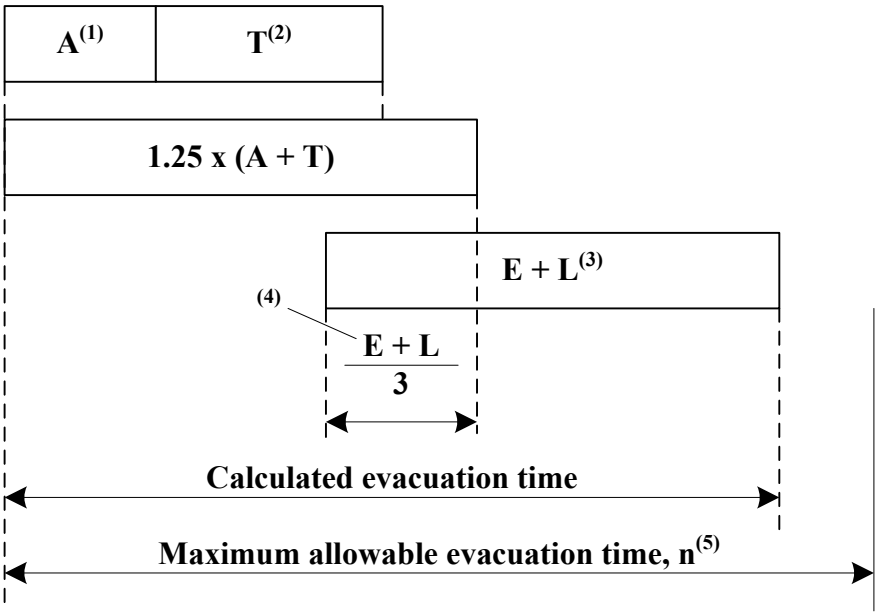

(1) 10 min in case 1 and case 3, 5 min in case 2 and case 4
(2) calculated as in appendix 1 to these Guidelines
(3) maximum 30min in compliance with SOLAS regulation III/21.1.4
(4) overlap time = 1/3 (E+L)
(5) values of n (min) provided in 3.5.2

Figure 3.5.3

3.6 *Calculation of E + L*

3.6.1 *E + L* should be calculated separately based upon:

.1 results of full scale trials on similar ships and evacuation systems; or

.2 data provided by the manufacturers. However, in this case, the method of calculation should be documented, including the value of correction factor used.

3.6.2 For cases where neither of the two above methods can be used, *E + L* should be assumed equal to 30 min.

3.7 *Identification of congestion*

Congestion is identified by either of the following criteria:

.1 initial density equal to, or greater than, 3.5 persons/m^2; or

.2 significant queues (accumulation of more than 1.5 persons per second between ingress and exit from a point).

4 Corrective actions

4.1 For new ships, if the total evacuation time calculated, as described in paragraph 3.5 above, is in excess of the required total evacuation time, corrective actions should be considered at the design stage by suitably modifying the arrangements affecting the evacuation system in order to reach the required total evacuation time.

4.2 For existing ships, if the total evacuation time calculated, as described in paragraph 3.5 above, is in excess of the required total evacuation time, on-board evacuation procedures should be reviewed with a view toward taking appropriate actions which would reduce congestion which may be experienced in locations as indicated by the analysis.

5 Documentation

The documentation of the analysis should report on the following items:

.1 basic assumptions for the analysis;

.2 schematic representation of the layout of the zones subjected to the analysis;

.3 initial distribution of persons for each considered scenario;

.4 methodology used for the analysis if different from these Interim Guidelines;

.5 details of the calculations;

.6 total evacuation time; and

.7 identified congestion points.

APPENDIX 1

METHOD TO CALCULATE THE TRAVEL TIME (T)

1 PARAMETERS TO BE CONSIDERED

1.1 Clear width (W_c)

Clear width is measured off the handrail(s) for corridors and stairways and the actual passage width of a door in its fully open position.

1.2 Initial density of persons (D)

The initial density of persons in an escape route is the number of persons (p) divided by the available escape route area pertinent to the space where the persons are originally located and expressed in (p/m^2).

1.3 Speed of persons (S)

The speed (m/s) of persons along the escape route depends on the specific flow of persons (as defined in 1.4) and on the type of escape facility. People speed values are given in tables 1.1 (initial speed) and 1.3 below (speed after transition point as a function of specific flow).

1.4 Specific flow of persons (F_s)

Specific flow (p/(ms)) is the number of escaping persons past a point in the escape route per unit time per unit of clear width W_c of the route involved. Values of F_S are given, in table 1.1 (initial F_s as a function of initial density) and in table 1.2 (maximum value) below.

Table 1.1* - Values of initial specific flow and initial speed as a function of density

Type of facility	Initial density D (p/m^2)	Initial specific flow Fs (p/(ms))	Initial speed of persons S (m/s)
Corridors	0	0	1.2
	0.5	0.65	1.2
	1,9	1.3	0.67
	3.2	0.65	0.20
	≥ 3.5	0.32	0.10

Table 1.2* - Value of maximum specific flow

Type of facility	Maximum specific flow Fs (p/(ms))
Stairs (down)	1.1
Stairs (up)	0.88
Corridors	1.3
Doorways	1.3

* Data derived from land-based stairs, corridors and doors in civil building and extracted from the publication "SFPE Fire Protection Engineering Handbook, 2nd edition, NFPA 1995".

Table 1.3* - Values of specific flow and speed

Type of facility	Specific flow *Fs* (p/(ms))	Speed of persons *S* (m/s)
Stairs (down)	0	1.0
	0.54	1.0
	1.1	0.55
Stairs (up)	0	0.8
	0.43	0.8
	0.88	0.44
Corridors	0	1.2
	0.65	1.2
	1.3	0.67

1.5 Calculated flow of persons (F_c)

The calculated flow of persons (p/s) is the predicted number of persons passing a particular point in an escape route per unit time. It is obtained from:

$$F_c = F_s \, W_c \qquad (1.5)$$

1.6 Flow time (t_F)

Flow time (s) is the total time needed for N persons to move past a point in the egress system, and is calculated as:

$$t_F = N / F_c \qquad (1.6)$$

1.7 Transitions

Transitions are those points in the egress system where the type (e.g., from a corridor to a stairway) or dimension of a route changes or where routes merge or ramify. In a transition, the sum of all the outlet-calculated flow is equal to the sum of all the inlet-calculated flow:

$$\Sigma \, F_c(in)_i = \Sigma \, F_c(out)_j \qquad (1.7)$$

where:

$F_c(\text{in})_i$ = calculated flow of route (i) arriving at transition point
$F_c(\text{out})_j$ = calculated flow of route (j) departing from transition point

1.8 Travel time T, correction factor and counterflow correction factor

Travel time T expressed in seconds as given by:

$$T = (\gamma + \delta) \, t_I \qquad (1.8)$$

where:

γ = is the correction factor to be taken equal to 2 for cases 1 and 2 and 1.3 for cases 3 and 4;

* Data derived from land-based stairs, corridors and doors in civil building and extracted from the publication "SFPE Fire Protection Engineering Handbook, 2nd edition, NFPA 1995".

δ = is the counterflow correction factor to be taken equal to 0.3; and
t_I = is the highest travel time expressed in seconds in ideal conditions resulting from application of the calculation procedure outlined in paragraph 2 of this appendix.

2 Procedure for calculating the travel time in ideal conditions

2.1 *Symbols*

To illustrate the procedure, the following notation is used:

t_{stair} = stairway travel time(s) of the escape route to the assembly station

t_{deck} = travel time(s) to move from the farthest point of the escape route of a deck to the stairway

$t_{assembly}$ = travel time(s) to move from the end of the stairway to the entrance of the assigned assembly station

2.2 *Quantification of flow time*

The basic steps of the calculation are the following:

.1 Schematization of the escape routes as a hydraulic network, where the pipes are the corridors and stairways, the valves are the doors and restrictions in general, and the tanks are the public spaces.

.2 Calculation of the density D in the main escape routes of each deck. In the case of cabin rows facing a corridor, it is assumed that the people in the cabins simultaneously move into the corridor; the corridor density is therefore the number of cabin occupants per corridor unit area calculated considering the clear width. For public spaces, it is assumed that all persons simultaneously begin the evacuation at the exit door (the specific flow to be used in the calculations is the door's maximum specific flow); the number of evacuees using each door may be assumed proportional to the door clear width.

.3 Calculation of the initial specific flows Fs, by linear interpolation from table 1.1, as a function of the densities.

.4 Calculation of the flow Fc for corridors and doors, in the direction of the correspondent assigned escape stairway.

.5 Once a transition point is reached, formula (1.7) is used to obtain the outlet calculated flow(s) Fc. In cases where two or more routes leave the transition point, it is assumed that the flow Fc of each route is proportional to its clear width. The outlet specific flow(s), Fs, is obtained as the outlet calculated flow(s) divided by the clear width(s); two possibilities exist:

.1 Fs does not exceed the maximum value of table 1.2; the corresponding outlet speed (S) is then taken by linear interpolation from table 1.3, as a function of the specific flow; or

.2 Fs exceeds the maximum value of table 1.2 above; in this case, a queue will form at the transition point, Fs is the maximum of table 1.2 and the corresponding outlet speed (S) is taken from table 1.3.

.6 The above procedure is repeated for each deck, resulting in a set of values of calculated flows Fc and speed S, each entering the assigned escape stairway.

.7 Calculation, from N (number of persons entering a flight or corridor) and from the relevant Fc, of the flow time t_F of each stairway and corridor. The flow time t_F of each escape route is the longest among those corresponding to each portion of the escape route.

.8 Calculation of the travel time t_{deck} from the farthest point of each escape route to the stairway, is defined as the ratio of length/speed. For the various portions of the escape route, the travel times should be summed up if the portions are used in series, otherwise the largest among them should be adopted. This calculation should be performed for each deck; as the people are assumed to move in parallel on each deck to the assigned stairway, the dominant value t_{deck} should be taken as the largest among them. No t_{deck} is calculated for public spaces.

.9 Calculation, for each stair flight, of its travel time as the ratio of inclined stair flight length and speed. For each deck, the total stair travel time, t_{stair}, is the sum of the travel times of all stairs flights connecting the deck with the assembly station.

.10 Calculation of the travel time t assembly from the end of the stairway (at the assembly station deck) to the entrance of the assembly station.

.11 The overall time to travel along an escape route to the assigned assembly station is:

$$t_I = t_F + t_{deck} + t_{stair} + t_{assembly} \qquad (2.2.11)$$

.12 The procedure should be repeated for both the day and night cases. This will result in two values (one for each case) of t_I for each main escape route leading to the assigned assembly station.

.13 Congestion points are identified as follows:

.1 in those spaces where the initial density is equal, or greater than, 3.5 persons/m^2; and

.2 in those locations where the difference between inlet and outlet calculated flows (F_C) is in more than 1.5 persons per second.

.14 Once the calculation is performed for all the escape routes, the highest t_I should be selected for calculating the travel time T using formula (1.8).

APPENDIX 2

EXAMPLE OF APPLICATION

1 General

1.1 This example provides an illustration on the application of the Interim Guidelines regarding cases 1 and 2. Therefore it should not be viewed as a comprehensive and complete analysis nor as an indication of the data to be used.

1.2 The present example refers to an early design analysis of arrangements of a hypothetical new cruise ship. Moreover, the performance standard is assumed to be 60 min, as for ro-ro passenger ships. It should be noted that, at the time this example was developed, no such requirement is applicable for passenger ships other than ro-ro passenger ships. This example is therefore to be considered purely illustrative.

2 Ship characteristics

2.1 The example is limited to two main vertical zones (MVZ 1 and MVZ 2) of a hypothetical cruise ship. For MVZ 1, a night scenario is considered, hereinafter called case 1 (see figure 1) while a day scenario (case 2, see figure 2) is considered for MVZ 2.

2.2 In case 1, the initial distribution corresponds to a total of 449 persons located in the crew and passengers cabins as follows: 42 in deck 5; 65 in deck 6 (42 in the fore part and 23 in the aft part); 26 in deck 7; 110 in deck 9; 96 in deck 10; and 110 in deck 11. Deck 8 (assembly station) is empty.

2.3 In case 2, the initial distribution corresponds to a total of 1138 persons located in the public spaces as follows: 469 in deck 6; 469 in deck 7; and 200 in deck 9. Deck 8 (assembly station) is empty.

3 Description of the system

3.1 *Identification of assembly stations*

For both MVZ 1 and MVZ 2, the assembly stations are located at deck 8, which is also the embarkation deck.

3.2 *Identification of escape routes*

3.2.1 In MVZ 1, the escape routes are as follows (see figure 3):

.1 Deck 5 is connected with deck 6 (and then deck 8 where assembly stations are located) through one stair (stair A) in the fore part of the zone. Four corridors (corridors 1, 2, 3 and 4) and two doors (respectively door 1 and 2) connect the cabins with stair A. The clear widths and lengths are:

Item	Wc (clear width)[m]	Length [m]	Area [m^2]	Notes
MVZ1 – deck 5 – corridor 1	0.9	13	11.7	To door 1
MVZ1 – deck 5 – corridor 2	0.9	20	18	To door 1
MVZ1 – deck 5 – corridor 3	0.9	9.5	8.55	To door 2
MVZ1 – deck 5 – corridor 4	0.9	20	18	To door 1
MVZ1 – deck 5 – door 1	0.9	N.A.	N.A.	To stair A
MVZ1 – deck 5 – door 2	0.9	N.A.	N.A.	To stair A
MVZ1 – deck 5 – stair A	1.35	4.67	N.A.	Up to deck 6

.2 Deck 6 is connected with deck 7 (and then deck 8) through two stairs (stairs A and B respectively in the fore and aft part of the zone). Four corridors (corridors 1, 2, 3 and 4) and two doors (doors 1 and 2) connect the fore cabins with stair A; and two corridors (corridors 5 and 6) and two doors (doors 3 and 4) connect the aft cabins with stair B. The clear widths and lengths are:

Item	Wc (clear width)[m]	Length [m]	Area [m^2]	Notes
MVZ1 – deck 6 – corridor 1	0.9	13	11.7	To door 1
MVZ1 – deck 6 – corridor 2	0.9	20	18	To door 1
MVZ1 – deck 6 – corridor 3	0.9	9.5	8.55	To door 2
MVZ1 – deck 6 – corridor 4	0.9	20	18	To door 1
MVZ1 – deck 6 – door 1	0.9	N.A.	N.A.	To stair A
MVZ1 – deck 6 – door 2	0.9	N.A.	N.A.	To stair A
MVZ1 – deck 6 – stair A	1.35	4.67	N.A.	Up to deck 7
MVZ1 – deck 6 – corridor 5	0.9	13	11.7	To door 3
MVZ1 – deck 6 – corridor 6	0.9	20	18	To door 4
MVZ1 – deck 6 – door 3	0.9	N.A.	N.A.	To stair B
MVZ1 – deck 6 – door 4	0.9	N.A.	N.A.	To stair B
MVZ1 – deck 6 – stair B	1.35	4.67	N.A.	Up to deck 7

.3 Deck 7 is connected with deck 8 through stair C (stairs A and B coming from below stop at deck 7). Arrival of stairs A and B and deck 7 cabins are connected to stair C through 8 corridors, doors are neglected here in view of simplifying this example. The clear widths and lengths are:

Item	Wc (clear width)[m]	Length [m]	Area [m^2]	Notes
MVZ1 – deck 7 – corridor 1	0.9	6	5.4	To stair C
MVZ1 – deck 7 – corridor 2	0.9	9	8.1	To corridor 7
MVZ1 – deck 7 – corridor 3	0.9	15	13.5	To corridor 8
MVZ1 – deck 7 – corridor 4	0.9	6	5.4	To stairway C
MVZ1 – deck 7 – corridor 5	0.9	14	12.6	To corridor 7
MVZ1 – deck 7 – corridor 6	0.9	15	13.5	To corridor 8
MVZ1 – deck 7 – corridor 7	2.4	11	26.4	From stair B
MVZ1 – deck 7 – corridor 8	2.4	9	21.6	From stair A to stair C
MVZ1 – deck 7 – stair C	1.40	4.67	N.A.	Up to deck 8

.4 Deck 11 is connected with deck 10 through a double stair (stair C) in the aft part of the zone. Two corridors (corridor 1 and 2) connect the cabins with stair C through two doors (respectively doors 1 and 2). The clear widths and lengths are:

Item	Wc (clear width)[m]	Length [m]	Area [m^2]	Notes
MVZ1 – deck 11 – corridor 1	0.9	36	32.4	To door 1
MVZ1 – deck 11 – corridor 2	0.9	36	32.4	To door 2
MVZ1 – deck 11 – door 1	0.9	N.A.	N.A.	To stair C
MVZ1 – deck 11 – door 2	0.9	N.A.	N.A.	To stair C
MVZ1 – deck 11 – stair C	2.8	4.67	N.A.	down to deck 10

.5 Deck 10 has a similar arrangement as deck 11. The clear widths and lengths are:

Item	Wc (clear width)[m]	Length [m]	Area [m^2]	Notes
MVZ1 – deck 10 – corridor 1	0.9	36	32.4	To door 1
MVZ1 – deck 10 – corridor 2	0.9	36	32.4	To door 2
MVZ1 – deck 10 – door 1	0.9	N.A.	N.A.	To stair C
MVZ1 – deck 10 – door 2	0.9	N.A.	N.A.	To stair C
MVZ1 – deck 10 – stair C	2.8	4.67	N.A.	down to deck 9

.6 Deck 9 has a similar arrangement as deck 11. The clear widths and lengths are:

Item	Wc (clear width)[m]	Length [m]	Area [m^2]	Notes
MVZ1 – deck 9 – corridor 1	0.9	36	32.4	To door 1
MVZ1 – deck 9 – corridor 2	0.9	36	32.4	To door 2
MVZ1 – deck 9 – door 1	0.9	N.A.	N.A.	To stair C
MVZ1 – deck 9 – door 2	0.9	N.A.	N.A.	To stair C
MVZ1 – deck 9 – stair C	2.8	4.67	N.A.	down to deck 8

.7 Deck 8, people coming from decks 5, 6 and 7 (stair C) and from decks 11, 10 and 9 (stair C) enters the assembly station through paths 1 and 2. The clear widths and lengths are:

Item	Wc (clear width)[m]	Length [m]	Notes
MVZ1 – deck 8 – path 1	2.00	9.50	to assembly station
MVZ1 – deck 8 – path 2	2.50	7.50	to assembly station

3.2.2 In MVZ 2, the escape routes are as follows (see figure 4):

.1 Deck 6 is connected with deck 7 (and then deck 8 where assembly stations are located) through two stairs (stair A and B respectively) in the fore part of the zone and through a double stair (stair C) in the aft part of the zone. Two doors (respectively door A and B) connect the public space with stairs A and B; and two doors (respectively door port side (PS) and door starboard side (SB)) connect the public space with stair C. The clear widths and lengths are:

Item	Wc (clear width)[m]	Length [m]	Notes
MVZ2 – deck 6 – door A	1	N.A.	
MVZ2 – deck 6 – door B	1	N.A.	
MVZ2 – deck 6 – door C PS	1.35	N.A.	
MVZ2 – deck 6 – door C SB	1.35	N.A.	
MVZ2 – deck 6 – stair A	1.4	4.67	up to deck 7
MVZ2 – deck 6 – stair B	1.4	4.67	up to deck 7
MVZ2 – deck 6 – stair C	3.2	4.67	up to deck 7

.2 deck 7 is connected with deck 8 through the same arrangements as deck 6 to deck 7. The clear widths and lengths are:

Item	Wc (clear width)[m]	Length [m]	Notes
MVZ2 – deck 7 – door A	1.7	N.A.	
MVZ2 – deck 7 – door B	1.7	N.A.	
MVZ2 – deck 7 – door C PS	0.9	N.A.	
MVZ2 – deck 7 – door C SB	0.9	N.A.	
MVZ2 – deck 7 – stair A	2.05	4.67	up to deck 8
MVZ2 – deck 7 – stair B	2.05	4.67	up to deck 8
MVZ2 – deck 7 – stair C	3.2	4.67	up to deck 8

.3 Deck 9 is connected with deck 8 through a double stair (stair C) in the aft part of the zone. Two doors (respectively door PS and door SB) connect the public space with stair C. The clear widths and lengths are:

Item	Wc (clear width)[m]	Length [m]	Notes
MVZ2 – deck 9 – door C PS	1	N.A.	
MVZ2 – deck 9 – door C SB	1	N.A.	
MVZ2 – deck 9 – stair C	3.2	4.67	down to deck 7

.4 Deck 8, people coming from decks 6 and 7 (stairs A and B) enter directly the embarkation station (open deck) through doors A and B, while people coming from deck 9 (stair C) enter the assembly (muster) station through paths 1 and 2. The clear widths and lengths are:

Item	Wc (clear width)[m]	Length [m]	Notes
MVZ2 – deck 8 – door A	2.05	N.A.	to embarkation station
MVZ2 – deck 8 – door B	2.05	N.A.	to embarkation station
MVZ2 – deck 8 – path 1	2	9.5	to assembly station
MVZ2 – deck 8 – path 2	2.5	7.5	to assembly station

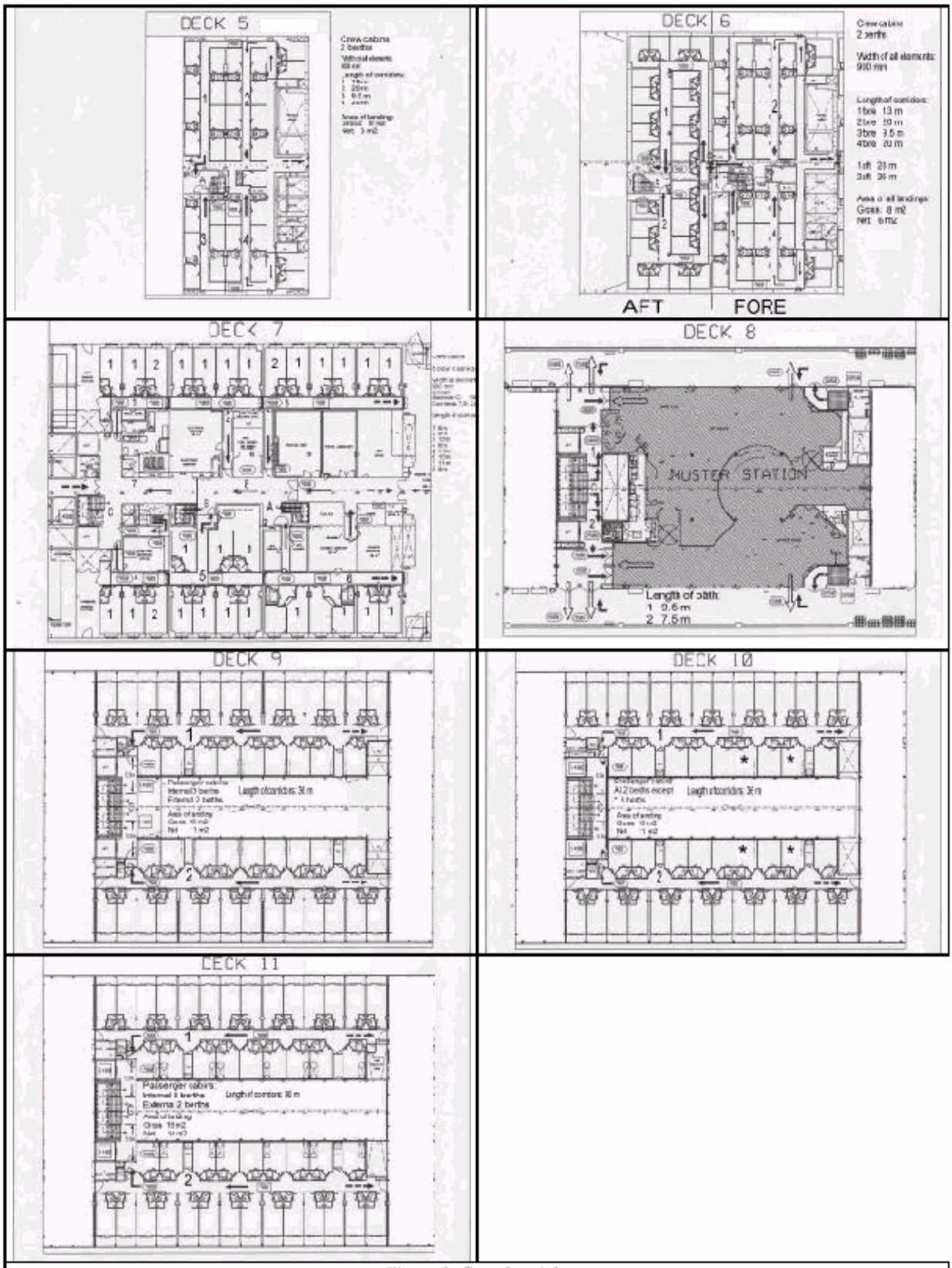

Figure 1: Case 1 - night

NOTE: "Muster Station" has the same meaning as "Assembly Station".

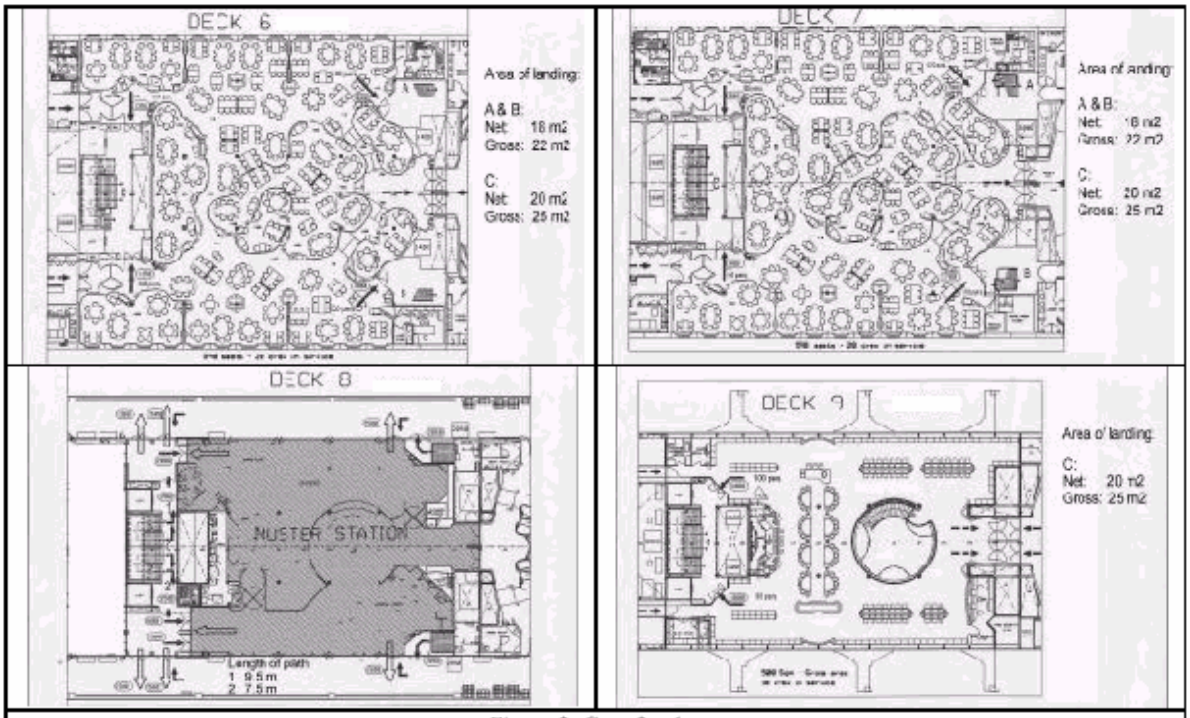

Figure 2: Case 2 - day

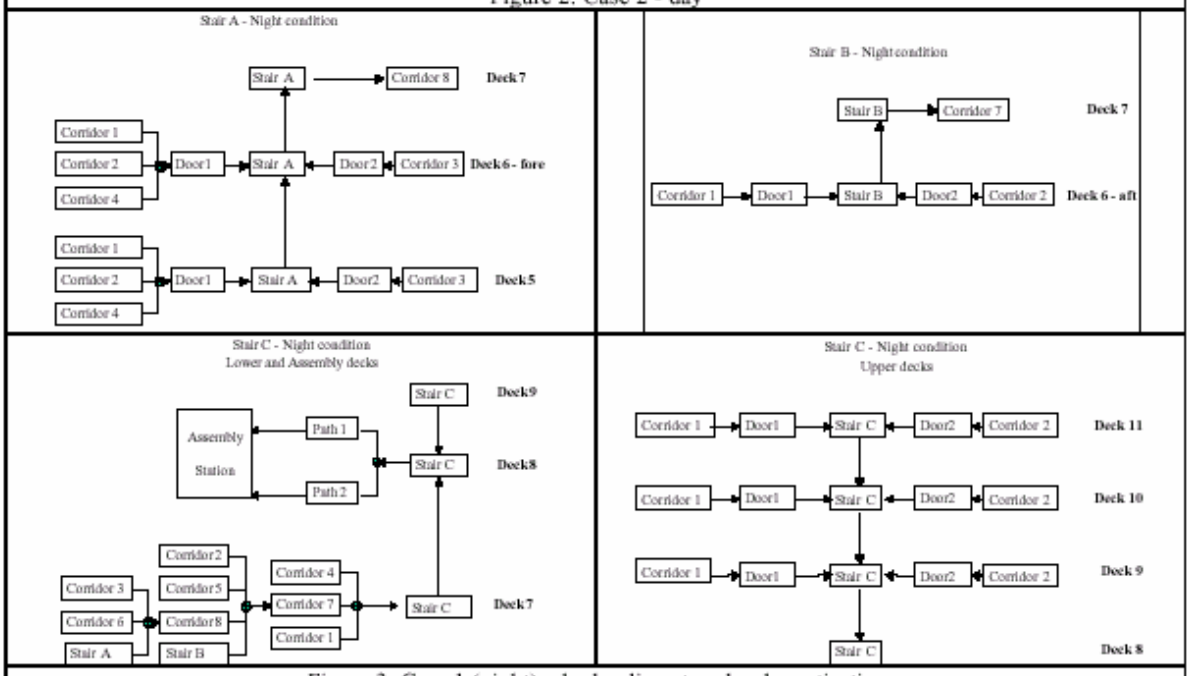

Figure 3: Case 1 (night) – hydraulic network schematisation

Figure 4: Case 2 (day) – hydraulic network schematisation

NOTE: "Muster Station" has the same meaning as "Assembly Station".

4 Scenarios considered

4.1 Case 1 refers to a day scenario in MVZ 1, according to chapter 13 of the FSS Code, the 449 persons are initially distributed as follows: 42 in deck 5; 65 in deck 6 (42 in the fore part and 23 in the aft part); 26 in deck 7; 110 in deck 9; 96 in deck 10; and 110 in deck 11. Deck 8 (assembly station) is empty. In accordance with paragraph 2.2 of appendix 1 to the Guidelines, all persons in the cabins are assumed to simultaneously move into the corridors. The corresponding initial conditions are:

MVZ 1 - Corridors	Persons	Initial density D (p/m^2)	Initial specific flow Fs (p/(ms))	Calculated flow Fc (p/s)	Initial speed of persons S (m/s)
Deck 5 – corridor 1	11	0.94	0.85	0.77	1.03
Deck 5 – corridor 2	12	0.67	0.73	0.65	1.14
Deck 5 – corridor 3	8	0.94	0.85	0.77	1.04
Deck 5 – corridor 4	11	0.61	0.7	0.63	1.16
Deck 6 – corridor 1	11	0.94	0.85	0.77	1.03
Deck 6 – corridor 2	12	0.67	0.73	0.65	1.14
Deck 6 – corridor 3	8	0.94	0.85	0.77	1.04
Deck 6 – corridor 4	11	0.61	0.7	0.63	1.16
Deck 6 – corridor 5	11	0.94	0.85	0.77	1.03
Deck 6 – corridor 6	12	0.67	0.73	0.65	1.14
Deck 7 – corridor 1	4	0.74	0.76	0.69	1.11
Deck 7 – corridor 2	4	0.49	0.64	0.58	1.2
Deck 7 – corridor 3	6	0.44	0.58	0.52	1.2
Deck 7 – corridor 4	4	0.74	0.76	0.69	1.11
Deck 7 – corridor 5	6	0.48	0.62	0.56	1.2
Deck 7 – corridor 6	2	0.15	0.19	0.17	1.2
Deck 7 – corridor 7	0	0	N.A.	N.A.	N.A.
Deck 7 – corridor 8	0	0	N.A.	N.A.	N.A.
Deck 11 – corridor 1	55	1.7	1.21	1.09	0.75
Deck 11 – corridor 2	55	1.7	1.21	1.09	0.75
Deck 10 – corridor 1	48	1.48	1.11	1	0.83
Deck 10 – corridor 2	48	1.48	1.11	1	0.83
Deck 9 – corridor 1	55	1.7	1.21	1.09	0.74
Deck 9 – corridor 2	55	1.7	1.21	1.09	0.74

MVZ 1 – Stairs, doors & corridors	Persons (N)		Specific flow Fs in (p/(ms))	Max. specific flow Fs (p/(ms))	Specific flow Fs (p/(ms))	Cal-culated flow Fc (p/s)	Speed of persons S (m/s)	Queue	Comments	Notes
	From current route	Total including those from other routes								
Deck 5 – door 1	34	34	2.28	1.3	1.3	1.17	N.A.	Yes	From corridors 1, 2 and 4	1
Deck 5 – door 2	8	8	1.85	1.3	0.85	0.77	N.A.		From corridor 3	1
Deck 5 – stair A	42	42	1.43	0.88	0.88	1.188	0.44	Yes	From doors 1 and 2	1, 2
Deck 6 – door 1	34	34	2.58	1.30	1.3	1.17	N.A.	Yes	From corridors 1, 2, and 4;	1
Deck 6 – door 2	8	8	0.85	1.30	0.85	0.77	N.A.		From corridor 3	1
Deck 6 – stair A	42	84	2.32	0.88	0.88	1.188	0.44	Yes	From doors 1 and 2, from deck 5	1, 2
Deck 6 – door 3	11	11	0.85	1.30	0.85	0.77	N.A.		From corridor 5	1
Deck 6 – door 4	12	12	0.73	1.30	0.81	0.73	N.A.		From corridor 4	1
Deck 6 – stair B	23	23	1.05	0.88	0.88	1.188	0.44	Yes	From doors 3 and 4	1, 2
Deck 7 – corridor 8	8	92	0.78	1.3	0.78	1.88	1.09		From corridors 3 and 6, from deck 6, stair A	1, 3
Deck 7 – corridor 7	18	125	1.75	1.3	1.3	3.12	0.67	Yes	From corridors 2, 5 and 8, from deck 6, stair B	1, 4
Deck 7 – stair C	8	133	3.21	0.88	0.88	1.232	0.44	Yes	From corridors 1, 4 and 7; up to deck 8	1, 2, 5
Deck 11 – door 1	55	55	1.21	1.3	1.21	1.09	N.A.		To stair C	1
Deck 11 – door 2	55	55	1.21	1.3	1.21	1.09	N.A.		To stair C	1
Deck 11 – stair C	110	110	0.78	1.1	0.78	2.17	0.81		Down to deck 10	1, 2
Deck 10 – door 1	48	48	1.11	1.3	1.11	1	N.A.		To stair C	1
Deck 10 – door 2	48	48	1.11	1.3	1.11	1	N.A.		To stair C	1
Deck 10 – stair C	96	206	1.49	1.1	1.10	3.08	0.55	Yes	Down to deck 9	1, 2
Deck 9 – door 1	55	55	1.21	1.3	1.21	1.09	N.A.		To stair C	1
Deck 9 – door 2	55	55	1.21	1.3	1.21	1.09	N.A.		To stair C	1
Deck 9 – stair C	110	316	1.88	1.1	1.10	3.08	0.55	Yes	Down to deck 8	1, 2
Deck 8 – path 1	0	200	0.96	1.3	0.96	1.92	0.95		To assembly stat.	1, 6
Deck 8 – path 2	0	249	0.96	1.3	0.96	2.4	0.95		To assembly stat.	1, 6

Notes:

1 The specific flow "Fs in" is the specific flow entering the element of the escape route; the maximum specific flow is the maximum allowable flow given in table 1.3 of appendix 1 of the Guidelines; the specific flow is the one applicable for the calculations i.e., the minimum between "Fs in" and the maximum allowable; when "Fs in" is greater than the maximum allowable, a queue is formed.

2 Some stairs are used by both persons coming from below (or above) and persons coming from the current deck considered; in making the calculation for a stair connecting deck N to deck N+1 (or deck N-1), the persons to be considered are those entering the stairs at deck N plus those coming from all decks below (or above) deck N.

3 At deck 7, 8 persons initially move from the cabins into corridor 8 and 84 persons arrive to corridor 8 from deck 6, stair A; the total is therefore 92 persons.

4 At deck 7, 18 persons initially move from the cabins into corridor 7, 23 persons arrive to corridor 7 from deck 6 stair B and 84 persons arrive to corridor 8 from deck 7, corridor 7; the total is therefore 125 persons.

5 At deck 7, 8 persons initially move from the cabins directly to the stair C and 125 persons arrive to stair C from corridor 8; the total is therefore 133 persons.

6 At deck 8 (assembly/muster station), no persons are initially present, therefore the escape routes on this deck are then used by the total number of persons arriving from above and/or below.

4.2 Case 2 refers to a day scenario in MVZ 2, according to chapter 13 of the FSS Code, the 1,138 persons are initially distributed as follows: 469 in deck 6; 469 in deck 7; and 200 in deck 9. Deck 8 (assembly/muster station) is initially empty. In accordance with paragraph 2.2 of appendix 1 to the Guidelines, all persons are assumed to simultaneously begin the evacuation and use the exit doors at their maximum specific flow. The corresponding initial conditions are:

MVZ 2 - Doors	**Persons**	**Initial density D (p/m^2)**	**Initial Specific flow Fs (p/(ms))**	**Calculated flow Fc (p/s)**	**Initial speed of persons S (m/s)**
Deck 6 – door A	100	N.A.	1.3	1.3	N.A.
Deck 6 – door B	100	N.A.	1.3	1.3	N.A.
Deck 6 – door C PS	134	N.A.	1.3	1.76	N.A.
Deck 6 – door C SB	135	N.A.	1.3	1.76	N.A.
Deck 7 – door A	170	N.A.	1.3	2.21	N.A.
Deck 7 – door B	170	N.A.	1.3	2.21	N.A.
Deck 7 – door C PS	65	N.A.	1.3	1.17	N.A.
Deck 7 – door C SB	64	N.A.	1.3	1.17	N.A.
Deck 9 – door C SB	100	N.A.	1.3	1.3	N.A.
Deck 9 – door C PS	100	N.A.	1.3	1.3	N.A.

MVZ 2 - Stairs	Persons (N)		Specific flow Fs in (p/(ms))	Max. specific flow Fs (p/(ms))	Specific flow Fs (p/(ms))	Calcu-lated flow Fc (p/s)	Speed of persons S (m/s)	Queue	Comments	Notes
	From current route	Total including those from other routes								
Deck 6 – stair A	100	100	0.93	0.88	0.88	1.23	0.44	Yes	up to deck 7	1
Deck 6 – stair B	100	100	0.93	0.88	0.88	1.23	0.44	Yes	up to deck 7	1
Deck 6 – stair C	269	269	1.1	0.88	0.88	2.82	0.44	Yes	up to deck 7	1
Deck 7 – stair A	170	270	1.68	0.88	0.88	1.8	0.44	Yes	up to deck 8	1, 2
Deck 7 – stair B	170	270	1.68	0.88	0.88	1.8	0.44	Yes	up to deck 8	1, 2
Deck 7 – stair C	129	398	1.61	0.88	0.88	2.82	0.44	Yes	up to deck 8	1, 2
Deck 9 – stair C	200	200	0.81	1.1	0.81	2.60	0.78		down to deck 8	
Deck 8 – path 1	0	266	1.2	1.3	1.2	2.41	0.75		from decks 7 and 9	1, 3
Deck 8 – path 2	0	332	1.2	1.3	1.2	3.01	0.75		from decks 7 and 9	1, 3
Deck 8 – door A	0	270	0.88	1.3	0.88	1.8	N.A.		from deck 7	1, 3
Deck 8 – door B	0	270	0.88	1.3	0.88	1.8	N.A.		from deck 7	1, 3

Notes:

1 The specific flow "Fs in" is the specific flow entering the element of the escape route; the maximum specific flow is the maximum allowable flow given in table 1.3 of appendix 1 of the Guidelines; the specific flow is the one applicable for the calculations i.e., the minimum between "Fs in" and the maximum allowable; when "Fs in" is greater than the maximum allowable, a queue is formed.

2 Some stairs are used by both persons coming from below (or above) and persons coming from the current deck considered; in making the calculation for a stair connecting deck N to deck N+1 (or deck N-1), the persons to be considered are those entering the stairs at deck N plus those coming from all decks below (or above) deck N.

3 At deck 8 (assembly/muster station), no persons are initially present, therefore the escape routes on this deck are then used by the total number of persons arriving from above and/or below.

5 Calculation of t_F, t_{deck} and t_{stair}

5.1 For case 1:

Item	Persons N	Length L (m)	Calculated flow Fc (p/s)	Speed S (m/s)	Flow time t_F (s) $t_F = N/Fc$	Deck or stairs time, t_{deck}, t_{stairs} $T = L/S$	Entering
Deck 5 – corridor 1	11	13	0.77	1.03	14.3	12.6	Door 1
Deck 5 – corridor 2	12	20	0.65	1.14	18.3	17.6	Door 1
Deck 5 – corridor 3	8	9.5	0.77	1.04	10.4	9.2	Door 2
Deck 5 – corridor 4	11	20	0.63	1.16	17.4	17.3	Door 1
Deck 5 – door 1	34	N.A.	1.17	N.A.	29.1	N.A.	Stair A
Deck 5 – door 2	8	N.A.	0.77	N.A.	10.4	N.A.	Stair A
Deck 5 – stair A	42	4.67	1.188	0.44	35.4	10.6	Deck 6
Deck 6 – corridor 1	11	13	0.77	1.03	14.3	12.6	Door 1
Deck 6 – corridor 2	12	20	0.65	1.14	18.3	17.6	Door 1
Deck 6 – corridor 3	8	9.5	0.77	1.04	10.4	9.2	Door 2
Deck 6 – corridor 4	11	20	0.63	1.16	17.4	17.3	Door 1
Deck 6 – door 1	34	N.A.	1.17	N.A.	29.1	N.A.	Stair A
Deck 6 – door 2	8	N.A.	0.77	N.A.	10.4	N.A.	Stair A
Deck 6 – stair A	84	4.67	1.188	0.44	70.7	10.6	Deck 7
Deck 6 – corridor 5	11	13	0.77	1.03	14.3	12.6	Door 3
Deck 6 – corridor 6	12	20	0.65	1.14	18.3	17.6	Door 4
Deck 6 – door 3	11	N.A.	0.77	N.A.	14.3	N.A.	Stair B
Deck 6 – door 4	12	N.A.	0.65	N.A.	18.3	N.A.	Stair B
Deck 6 – stair B	23	4.67	1.188	0.44	19.4	10.6	Deck 7
Deck 7 – corridor 1	4	6	0.69	1.11	5.8	5.4	Stair C
Deck 7 – corridor 2	4	9	0.58	1.2	6.9	7.5	Corridor 7
Deck 7 – corridor 3	6	15	0.52	1.2	11.5	12.5	Corridor 8
Deck 7 – corridor 4	4	6	0.69	1.11	5.8	5.4	Stair C
Deck 7 – corridor 5	6	14	0.56	1.2	10.8	11.7	Corridor 7
Deck 7 – corridor 6	2	15	0.17	1.2	11.5	12.5	Corridor 8
Deck 7 – corridor 8	92	9	1.88	1.09	48.9	8.2	Corridor 7
Deck 7 – corridor 7	125	11	3.12	0.67	40.1	16.4	Stair C
Deck 7 – stair C	133	4.67	1.232	0.44	108	10.6	Deck 8
Deck 11– corridor 1	55	36	1.09	0.75	50.7	48.2	Door 1
Deck 11– corridor 2	55	36	1.09	0.75	50.7	48.2	Door 2
Deck 11 – door 1	55	N.A.	1.09	N.A.	50.7	N.A.	Stair C
Deck 11 – door 2	55	N.A.	1.09	N.A.	50.7	N.A.	Stair C
Deck 11 – stair C	110	4.67	2.17	0.81	50.7	5.8	Deck 10
Deck 10– corridor 1	48	36	1	0.83	48.2	43.5	Door 1
Deck 10– corridor 2	48	36	1	0.83	48.2	43.5	Door 2
Deck 10 – door 1	48	N.A.	1	N.A.	48.2	N.A.	Stair C
Deck 10 – door 2	48	N.A.	1	N.A.	48.2	N.A.	Stair C
Deck 10 – stair C	206	4.67	3.08	0.55	66.9	8.5	Deck 9
Deck 9– corridor 1	55	36	1.09	0.74	50.7	48.4	Door 1
Deck 9– corridor 2	55	36	1.09	0.74	50.7	48.4	Door 2
Deck 9 – door 1	55	N.A.	1.09	N.A.	50.7	N.A.	Stair C
Deck 9 – door 2	55	N.A.	1.09	N.A.	50.7	N.A.	Stair C
Deck 9 – stair C	316	4.67	3.08	0.55	102.6	8.5	Deck 8

5.2 For case 2: since in this particular arrangement there are no corridors, the deck time is zero.

Item	Persons *N*	Length *L* (m)	Calculated flow *Fc* (p/s)	Speed *S* (m/s)	Flow time t_F (s) $t_F = N/Fc$	Deck or stairs *time*, t_{deck}, t_{stairs} $t = L/S$	Entering
Deck 6 – door A	100	N.A.	1.3	N.A	76.9	N.A.	Stair A
Deck 6 – door B	100	N.A.	1.3	N.A.	76.9	N.A.	Stair B
Deck 6 – door C PS	134	N.A.	1.76	N.A.	76.4	N.A.	Stair C
Deck 6 – door C SB	135	N.A.	1.76	N.A.	76.9	N.A.	Stair C
Deck 6 – stair A	100	4.67	1.23	0.44	81.2	10.6	Deck 7
Deck 6 – stair B	100	4.67	1.23	0.44	81.2	10.6	Deck 7
Deck 6 – stair C	269	4.67	2.82	0.44	95.5	10.6	Deck 7
Deck 7 – door A	170	N.A.	2.21	N.A	76.9	N.A.	Stair A
Deck 7 – door B	170	N.A.	2.21	N.A.	76.9	N.A.	Stair B
Deck 7 – door C PS	65	N.A.	1.17	N.A.	55.6	N.A.	Stair C
Deck 7 – door C SB	64	N.A.	1.17	N.A.	54.7	N.A.	Stair C
Deck 7 – stair A	270	4.67	1.8	0.44	149.7	10.6	Deck 8
Deck 7 – stair B	270	4.67	1.8	0.44	149.7	10.6	Deck 8
Deck 7 – stair C	398	4.67	2.82	0.44	141.3	10.6	Deck 8
Deck 8 – door A	270	N.A.	1.8	N.A.	149.7	N.A.	Embarkation
Deck 8 – door B	270	N.A.	1.8	N.A.	149.7	N.A.	Embarkation
Deck 9 – door PS	100	N.A.	1.3	N.A.	76.9	N.A.	Stair C
Deck 9 – door SB	100	N.A.	1.3	N.A.	76.9	N.A.	Stair C
Deck 9 – stair C	200	4.67	2.6	0.78	76.9	6	Deck 8

6 Calculation of $t_{assembly}$

6.1 Case 1: In this case, all the 429 persons use stair C (316 coming from above deck 8 and 133 from below) and, once arrived at deck 8, need to travel on deck 8 to reach the assembly station using either path 1 or path 2. The corresponding time is as follows:

Item	Persons *N*	Length *L* (m)	Calculated flow *Fc* (p/s)	Speed *S* (m/s)	Flow time t_F (s) $t_F = N/Fc$	$t_{assembly}$ $t = L/S$	Entering
Deck 8 – path 1	200	9.5	1.92	0.95	104.4	10	Assembly station
Deck 8 – path 2	249	7.5	2.4	0.95	103.9	7.9	Assembly station

6.2 Case 2: In this case, all the persons using stair C (totalling 598), once arrived at deck 8, need to travel through on deck 8 to reach the assembly station using either path 1 or path 2. The corresponding time is as follows:

Item	Persons N	Length L (m)	Calculated flow Fc (p/s)	Speed S (m/s)	Flow time t_F (s) t_F = N/ Fc	$t_{assembly}$ $t = L/S$	Entering
Deck 8 – path 1	266	9.5	2.41	0.75	110.5	12.7	Assembly station
Deck 8 – path 2	332	7.5	3.01	0.75	110.3	10	Assembly station

7 Calculation of T

7.1 Case 1: The travel time T, according to appendix 1 to the Interim Guidelines, is the maximum t_I (equation 2.2.11) multiplied by 2.3 (sum of correction factor and counterflow correction factor). The maximum values of t_I for each escape route are given in the following:

Escape route on	T_{deck}	t_f	t_{stair}	$t_{assembly}$	t_I	T	Notes
Deck 11	48.2	104.4	22.7	10	185.3	426.2	1
Deck 10	43.5	104.4	17	10	174.8	402	1, 2
Deck 9	48.4	104.4	8.5	10	171.3	394	1, 2
Deck 8	0	104.4	0	10	114.4	286.1	
Deck 7	37.1	108	10.6	10	163.9	377	1
Deck 6 – stair A (fore)	42.4	108	21.2	10	179.6	413.1	1, 3
Deck 6 – stair B (aft)	34	108	21.2	10	170.2	391.5	1, 3
Deck 5	42.2	108	31.8	10	190.2	437.5	1, 3

Notes:

1 The flow time, t_f, is the maximum flow time recorded on the whole escape route from the deck where persons started evacuating up to the muster station.

2 The travel time on the stairways (t stair) is the total time necessary to travel along all the stairs from the deck where persons originally started evacuating up to the deck where the assembly station is located; in the present case, t stair for persons moving down from deck 11 is therefore the sum of t stair from deck 11 to 10 (5.7 s), form deck 10 to 9 (8.5 s) and from deck 9 to 8 (8.5 s), in total 22.7 s; similarly for the other cases.

3 The travel time on the stairways (t stair) is the total time necessary to travel along all the stairs from the deck where persons originally started evacuating up to the deck where the assembly station is located; in the present case, t stair for persons moving up from deck 5 is therefore the sum of t stair from deck 5 to 6 (10.6 s.), form deck 6 to 7 (10.6 s) and from deck 7 to 8 (10.6 s), in total 31.8 s; similarly for the other cases.

Accordingly, the corresponding value of T is 437.5 s.

7.2 Case 2: The travel time *T*, according to appendix 1 to the Guidelines, is the maximum t_I equation 2.2.11) multiplied by 2.3 (sum of correction factor and counterflow correction factor). The maximum values of t_I for each escape route are given in the following:

Escape route on	T_{deck}	t_f	t_{stair}	$t_{assembly}$	t_I	T	Notes
Deck 9	0	110.4	6	12.7	168.3	387.2	1, 2
Deck 8	0	110.4	0	12.7	162.4	373.4	
Deck 7 – stair A	0	149.7	10.6	0	160.3	368.6	
Deck 7 – stair B	0	149.7	10.6	0	160.3	368.6	
Deck 7 – stair C	0	141.3	10.6	12.7	164.6	378.7	2
Deck 6 – stair A	0	149.7	21.2	0	170.9	393	1, 3
Deck 6 – stair B	0	149.7	21.2	0	170.9	393	1, 3
Deck 6 – stair C	0	141.3	21.2	12.7	175.2	403.1	1, 2, 3

Notes:

1 The flow time, t_f, is the maximum flow time recorded on the whole escape route from the deck where persons started evacuating up to the assembly station.

2 In this example, stairs A and B are already leading to the embarkation station, therefore only those escape routes passing through stair C need additional time, $t_{assembly}$, to reach the assembly station.

3 The travel time on the stairways (t_{stair}) is the total time necessary to travel along all the stairs from the deck where persons originally started evacuating up to the deck where the assembly station is located; in the present case, t_{stair} for persons moving from deck 6 is therefore the sum of t_{stair} from deck 6 to 7 (10.6 s) and from deck 7 to 8 (10.6 s).

Accordingly, the corresponding value of *T* is 403.1 s.

8 Identification of congestion

8.1 Case 1: Congestion takes place on deck 5 (door 1 and stair A), deck 6 (door 1, stair A and B), deck 7 (corridor 7 and stair C), deck 10 (stair C) and deck 9 (stair C). However, since the total time is below the limit (see paragraph 9.1 of this example) and no design modifications are needed.

8.2 Case 2: Congestion takes place on deck 6 (stairs A, B and C) and deck 7 (stairs A, B and C). However, since the total time is below the limit (see paragraph 9.2 of this example) no design modifications are needed.

9 Performance standard

9.1 Case 1: The total evacuation time, according to paragraph 3.5 of the Interim Guidelines is as follows:

$$1.25\ A + T + 2/3\ (E+L) = 1.25\text{-x}\ (10' + 7'18'') + 20 = 41'\ 38'' \qquad (9.1)$$

Where:

$E + L$ is assumed to be 30'
A = 10' (night case)
T = 7' 18"

9.2 Case 2: The total evacuation time, according to paragraph 3.5 of the Interim Guidelines is as follows:

$$1.25A + T + 2/3\ (E+L) = 1.25\text{-x}\ (5' + 6'\ 43'') + 20 = 34'\ 39'' \qquad (9.2)$$

Where:

$E + L$ is assumed to be 30'
A = 5' (day case)
T = 6' 43".

ANNEX 2

GUIDELINES FOR AN ADVANCED EVACUATION ANALYSIS OF NEW AND EXISTING PASSENGER SHIPS*

1 General

1.1 The purpose of these Guidelines is to present the methodology for conducting an advanced evacuation analysis and, in particular, to:

.1 identify and eliminate, as far as practicable, congestion which may develop during an abandonment, due to normal movement of passengers and crew along escape routes, taking into account the possibility that crew may need to move along these routes in a direction opposite the movement of passengers; and

.2 demonstrate that escape arrangements are sufficiently flexible to provide for the possibility that certain escape routes, assembly stations, embarkation stations or survival craft may be unavailable as a result of a casualty.

2 Definitions

2.1 *Person load* is the number of persons (p) considered in the means of escape calculations contained in chapter 13 of the Fire Safety Systems (FSS) Code (resolution MSC.98(73)).

2.2 *Response times* are intended to reflect the total time spent in pre-evacuation movement activities beginning with the sound of the alarm. This includes issues such as cue perception provision and interpretation of instructions, individual reaction times, and performance of all other miscellaneous pre-evacuation activities.

2.3 *Individual travel time* is the time incurred by an individual in moving from his/her starting location to reach the assembly station.

2.4 *Individual assembly time* is the sum of the individual response time and the individual travel time.

2.5 *Total assembly time* (t_A), is the maximum individual assembly time.

2.6 *Embarkation time* (E) and *launching time* (L), the sum of which defines the time required to provide for abandonment by the total number of persons on board.

* **Note:** Advanced evacuation analysis is taken to mean a computer-based simulation that represents each occupant as an individual that has a detailed representation of the layout of a ship and represents the interaction between the occupants and the layout.

3 Method of evaluation

3.1 *Description of the system*:

.1 Identification of assembly stations.

.2 Identification of escape routes.

3.2 *Assumptions*

This method of estimating the evacuation time is based on several idealized benchmark scenarios and the following assumptions are made:

.1 the passengers and crew are represented as unique individuals with specified individual abilities and response times;

.2 passengers and crew will evacuate via the main escape routes, as referred to in SOLAS regulation II-2/13;

.3 passenger load and initial distribution is based on chapter 13 of the FSS Code;

.4 unless otherwise stated, full availability of escape arrangements is considered;

.5 a safety factor having a value of 1.25 is introduced in the calculation to take account of model omissions, assumptions, and the limited number and nature of the benchmark scenarios considered. These issues include:

.5.1 the crew will immediately be at the evacuation duty stations ready to assist the passengers;

.5.2 passengers follow the signage system and crew instructions (i.e., route selection is not predicted by the analysis);

.5.3 smoke, heat and toxic fire products present in fire effluent are not considered to impact passenger/crew performance;

.5.4 family group behaviour is not considered in the analysis; and

.5.5 ship motion, heel, and trim are not considered.

3.3 *Scenarios to be considered*

3.3.1 As a minimum, four scenarios should be considered for the analysis. Two scenarios, namely night (case 1) and day (case 2), as specified in chapter 13 of the FSS Code; and, two further scenarios (case 3 and case 4) based on reduced escape route availability are considered for the day and night case, as specified in the appendix.

3.3.2 Additional relevant scenarios may be considered as appropriate.

3.4 ***Calculation of the evacuation time***

The following components should be included in the calculation of the evacuation time as specified in paragraphs 3.5 and 3.6 below:

.1 The response time distribution to be used in the calculations is specified in the appendix.

.2 The method to determine the travel time, T is given in the appendix.

.3 Embarkation time (E) and launching time (L).

3.5 ***Performance standards***

3.5.1 The following performance standards, as illustrated in figure 3.5.3, should be complied with:

Calculated total evacuation time: $1.25\ T + 2/3\ (E + L) \leq n$ (1)

$E + L \leq 30$ min (2)

3.5.2 In performance standard (1):

.1 for ro-ro passenger ships, n = 60; and

.2 for passenger ships other than ro-ro passenger ships, n = 60 for ships with no more than three main vertical zones and n = 80 for ships with more than three main vertical zones.

3.5.3 Performance standard (2) complies with SOLAS regulation III/21.1.4.

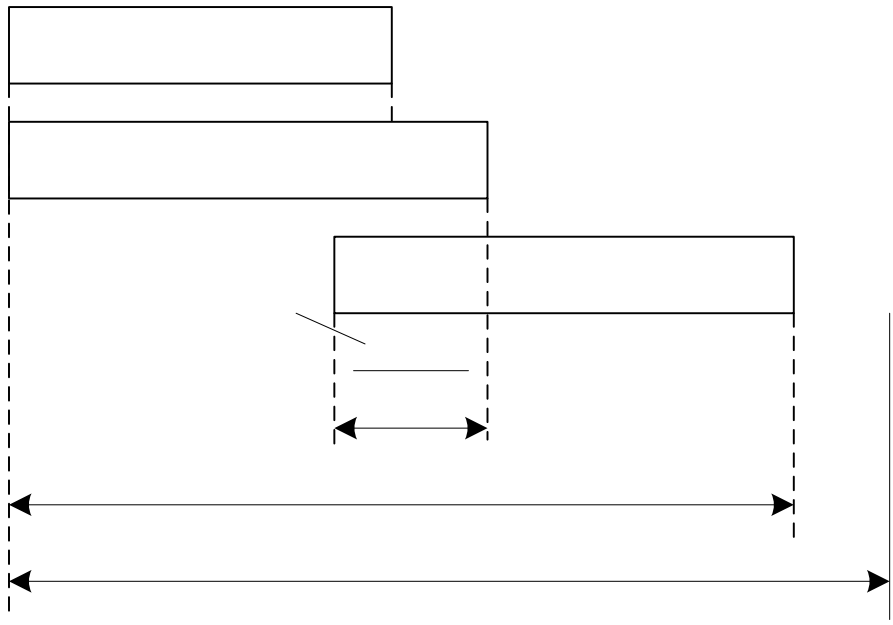

(1) calculated as in the appendix to the Interim Guidelines
(2) maximum 30 min in compliance with SOLAS regulation III/21.1.4
(3) overlap time = 1/3 (E+L)
(4) values of n (min) provided in paragraph 3.5.2

Figure 3.5.3

3.6 ***Calculation of E + L***

3.6.1 *E* + *L* should be calculated based upon:

.1 the results of full scale trials on similar ships and evacuation systems; or

.2 data provided by the manufacturers. However, in this case, the method of calculation should be documented, including the value of safety factor used.

3.6.2 For cases where neither of the two above methods can be used, *E* + *L* should be assumed equal to 30 min.

3.7 ***Identification of congestion***

3.7.1 Congestion within regions is identified by local population densities exceeding 4 p/m^2 for significant periods of time. These levels of congestion may or may not be significant to the overall assembly process.

3.7.2 If any identified congestion region is found to persist for longer than 10% of the simulated overall assembly time (t_A), it is considered to be significant.

4 Corrective actions

4.1 For new ships, if the total evacuation time calculated, as described in paragraph 3.5 above, is in excess of the required total evacuation time, corrective actions should be considered at the design stage by suitably modifying the arrangements affecting the evacuation system in order to reach the required total evacuation time.

4.2 For existing ships, if the total evacuation time calculated, as described in paragraph 3.5 above, is in excess of the total evacuation time, on-board evacuation procedures should be reviewed with a view toward taking appropriate actions which would reduce congestion which may be experienced in locations as indicated by the analysis.

5 Documentation

The documentation of the analysis should be provided as specified in the appendix.

APPENDIX

METHOD TO DETERMINE THE TRAVEL TIME (T) BY SIMULATION TOOLS FOR THE ADVANCED EVACUATION ANALYSIS

1 Characteristics of the models

1.1 Each person (p) is represented in the model individually.

1.2 The abilities of each person are determined by a set of parameters, some of which are probabilistic.

1.3 The movement of each person is recorded.

1.4 The parameters should vary among the individuals of the population.

1.5 The basic rules for personal decisions and movements are the same for everyone, described by a universal algorithm.

1.6 The time difference between the actions of any two persons in the simulation should be not more than one second of simulated time, e.g. all persons proceed with their action in one second (a parallel update is necessary).

2 Parameters to be used

2.1 In order to facilitate their use, the parameters are grouped into the same 4 categories as used in other industrial fields, namely: GEOMETRICAL, POPULATION, ENVIRONMENTAL and PROCEDURAL.

2.2 Category GEOMETRICAL: layout of escape routes, their obstruction and partial unavailability, initial passenger and crew distribution conditions.

2.3 Category POPULATION: ranges of parameters of persons and population demographics.

2.4 Category ENVIRONMENTAL: static and dynamic conditions of the ship.

2.5 Category PROCEDURAL: crew members available to assist in emergency.

3 Recommended values of the parameters

3.1 *Category GEOMETRICAL*

3.1.1 General. The evacuation analysis specified in this annex is aimed at measuring the performance of the ship in reproducing benchmark scenarios rather than simulating an actual emergency situation. Four benchmark cases should be considered, namely case 1, 2, 3 and 4 (refer to paragraph 4 for detailed specifications) corresponding to primary evacuation cases (case 1 and 2, where all the escape routes should be assumed to be in operation) and secondary evacuation cases (case 3 and 4, where some of the escape route should be assumed to be unavailable).

3.1.2 Layout of escape routes - primary evacuation cases (case 1 and case 2): Passengers and crew should be assumed to proceed along the primary escape routes and to know their ways up to the assembly stations; to this effect, signage, low-location lighting, crew training and other relevant aspects connected with the evacuation system design and operation should be assumed to be in compliance with the requirements set out in IMO instruments.

3.1.3 Layout of escape routes – secondary evacuation cases (case 3 and case 4): Those passengers and crew who were previously assigned to the now unavailable primary escape route should be assumed to proceed along the escape routes determined by the ship designer.

3.1.4 Initial passenger and crew distribution condition. The occupant distribution should be based upon the cases defined in chapter 13 of the FSS Code, as outlined in 4.

3.2 ***Category POPULATION***

3.2.1 This describes the make-up of the population in terms of age, gender, physical attributes and response times. The population is identical for all scenarios with the exception of the response time and passenger initial locations. The population is made of the following mix:

Table 3.1 – Population's composition (age and gender)

Population groups - passengers	**Percentage of passengers (%)**
Females younger than 30 years	7
Females 30-50 years old	7
Females older than 50 years	16
Females older than 50, mobility impaired (1)	10
Females older than 50, mobility impaired (2)	10
Males younger than 30 years	7
Males 30-50 years old	7
Males older than 50 years	16
Males older than 50, mobility impaired (1)	10
Males older than 50, mobility impaired (2)	10
Population groups – crew	**Percentage of crew (%)**
Crew females	50
Crew males	50

All of the attributes associated with this population distribution should consist of a statistical distribution within a fixed range of values. The range is specified between a minimum and maximum value with a uniform random distribution.

3.2.2 Response time

The response time distributions for the benchmark scenarios should be truncated logarithmic normal distributions[1] as follows:

[1] "Recommendations on the Nature of the Passenger Response Time Distribution to be used in the MSC.1033 Assembly Time Analysis Based on Data Derived from Sea Trials", Galea, E. R., Deere, S., Sharp, G., Fillips, L., Lawrence, P., and Gwunne, S., The Transaction of The Royal Institution of Naval Architects, Part A - International Journal of Maritime Engineering ISSN 14798751.2007.

For Case 1 and Case 3 (Night Cases):

$$y = \frac{1.01875}{\sqrt{2\pi}\,0.84(x-400)} \exp\left[-\frac{(\ln(x-400)-3.95)^2}{2\times 0.84^2}\right] \qquad (3.2.2.1)$$

$$400 < x < 700$$

For Case 2 and Case 4 (Day Cases):

$$y = \frac{1.00808}{\sqrt{2\pi}\,0.94x} \exp\left[-\frac{(\ln(x)-3.44)^2}{2\times 0.94^2}\right] \qquad (3.2.2.2)$$

$$0 < x < 300$$

where, x is the response time in seconds and y is the probability density at response time x.

3.2.3 Unhindered travel speeds on flat terrain (e.g., corridors)

The maximum unhindered travel speeds to be used are those derived from data published by Ando[2] which provides male and female walk rates as a function of age. These are distributed according to figure 3.1 and represented by approximate piecewise functions shown in table 3.3.

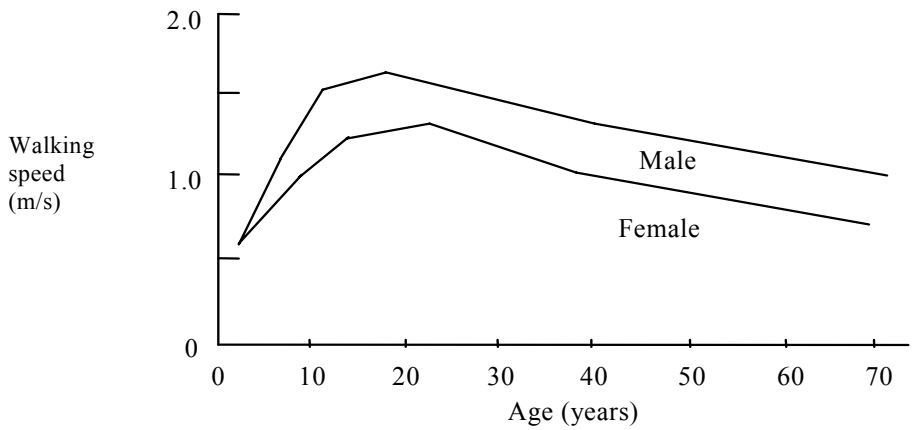

Figure 3.1 - Walking speeds as a function of age and gender

[2] Ando K, Ota H, and Oki T, Forecasting The Flow Of People, Railway Research Review, (45), pp 8-14, 1988.

Table 3.3 - Regression formulation for mean travel speed values[3]

Gender	Age (years)	Speed (m/s)
Female	2 - 8.3	0.06 * age + 0.5
	8.3 - 13.3	0.04 * age + 0.67
	13.3 - 22.25	0.02 * age + 0.94
	22.25 - 37.5	-0.018 * age + 1.78
	37.5 - 70	-0.01 * age + 1.45
Male	2 - 5	0.16 * age + 0.3
	5 - 12.5	0.06 * age + 0.8
	12.5 - 18.8	0.008 * age + 1.45
	18.8 - 39.2	-0.01 * age + 1.78
	39.2 - 70	-0.009 * age + 1.75

For each and gender group specified in table 3.1, the walking speed should be modelled as a statistical uniform distribution having minimum and maximum values as follows:

Table 3.4 – Walking speed on flat terrain (e.g., corridors)

Population groups – passengers	**Walking speed on flat terrain (e.g., corridors)**	
	Minimum (m/s)	**Maximum (m/s)**
Females younger than 30 years	0.93	1.55
Females 30-50 years old	0.71	1.19
Females older than 50 years	0.56	0.94
Females older than 50, mobility impaired (1)	0.43	0.71
Females older than 50, mobility impaired (2)	0.37	0.61
Males younger than 30 years	1.11	1.85
Males 30-50 years old	0.97	1.62
Males older than 50 years	0.84	1.4
Males older than 50, mobility impaired (1)	0.64	1.06
Males older than 50, mobility impaired (2)	0.55	0.91
Population groups – crew	**Walking speed on flat terrain (e.g., corridors)**	
	Minimum (m/s)	**Maximum (m/s)**
Crew females	0.93	1.55
Crew males	1.11	1.85

[3] Maritime EXODUS V4.0, USER GUIDE AND TECHNICAL MANUAL, Authors: E R Galea, S Gwynne, P. J. Lawrence, L. Filippidis, D. Blackshields and D. Cooney, CMS Press, May 2003 Revision 1.0, ISBN: 1 904521 38 X.

3.2.4 Unhindered stair speeds[4]

Speeds are given on the base of gender, age and travel direction (up and down). The speeds in table 3.5 are those along the inclined stairs. It is expected that all the data above will be updated when more appropriate data and results become available.

Table 3.5 – Walking speed on stairs

Population groups – passengers	**Walking speed on stairs (m/s)**			
	Stairs down		**Stairs up**	
	Min.	**Max.**	**Min.**	**Max.**
Females younger than 30 years	0.56	0.94	0.47	0.79
Females 30-50 years old	0.49	0.81	0.44	0.74
Females older than 50 years	0.45	0.75	0.37	0.61
Females older than 50, mobility impaired (1)	0.34	0.56	0.28	0.46
Females older than 50, mobility impaired (2)	0.29	0.49	0.23	0.39
Males younger than 30 years	0.76	1.26	0.5	0.84
Males 30-50 years old	0.64	1.07	0.47	0.79
Males older than 50 years	0.5	0.84	0.38	0.64
Males older than 50, mobility impaired (1)	0.38	0.64	0.29	0.49
Males older than 50, mobility impaired (2)	0.33	0.55	0.25	0.41
Population groups – Crew	**Walking speed on stairs (m/s)**			
	Stairs down		**Stairs up**	
	Min.	**Max.**	**Min.**	**Max.**
Crew females	0.56	0.94	0.47	0.79
Crew males	0.76	1.26	0.5	0.84

3.2.5 Exit flow rate (doors)

The specific unit flow rate is the number of escaping persons past a point in the escape route per unit time per unit width of the route involved, and is measured in number of persons (p). The specific unit flow rate[5] for any exit should not exceed 1.33 p/(m s).

3.3 *Category ENVIRONMENTAL*

Static and dynamic conditions of the ship. These parameters will influence the moving speed of persons. Presently no reliable figures are available to assess this effect, therefore these parameters could not yet be considered. This effect will not be accounted for in the scenarios (cases 1, 2, 3 and 4) until more data has been gathered.

---

4 The maximum unhindered stair speeds are derived from data generated by J. Fruin. Pedestrian planning and design, Metropolitan Association of Urban Designers and Environmental Planners, New York, 1971. The study comprises two staircase configurations.

5 Value based on data accepted in civil building applications in Japan, the United Kingdom and the United States; this value is also consistent with the simplified evacuation analysis method.

3.4 ***Category PROCEDURAL***

For the purposes of the four benchmark cases, it is not required to model any special crew procedures. However, the distribution of the crew for the benchmark cases should be in accordance with 4.

3.5 It is expected that all data provided in paragraph 3.2 and 3.3 will be updated when more appropriate data and results become available.

4 Detailed specifications (scenarios) for the 4 cases to be considered

For the purpose of conducting the evacuation analysis, the following initial distributions of passengers and crew should be considered as derived from chapter 13 of the FSS Code, with the additional indications only relevant for the evacuation analysis. If the total number of persons on board calculated as indicated in the following cases exceeds the maximum number of persons the ship will be certified to carry, the initial distribution of persons should be scaled down so that the total number of persons is equal to what the ship will be certified to carry.

4.1 ***Case 1 (primary evacuation case, night)***

Passengers in cabins with maximum berthing capacity fully occupied; 2/3 of crew members in their cabins; of the remaining 1/3 of crew members:

.1 50% should be initially located in service spaces and behave as passengers having walking speed and reaction time as specified in paragraph 3;

.2 25% should be located at their emergency stations and should not be explicitly modelled; and

.3 25% should be initially located at the assembly stations and should proceed towards to the most distant passenger cabin assigned to that assembly station in counterflow with evacuees; once this passenger cabin is reached, these crew are no longer considered in the simulation. The ratio between the passenger and counterflow crew should be the same in each main vertical zone.

4.2 ***Case 2 (primary evacuation case, day)***

Public spaces, as defined by SOLAS regulation II-2/3.39, will be occupied to 75 % of maximum capacity of the spaces by passengers. Crew will be distributed as follows:

.1 1/3 of the crew will behave as passengers with crew's walking speeds and reaction times as specified in paragraph 3 and being initially distributed in the crew cabins;

.2 1/3 of the crew will behave as passengers with crew's walking speeds and reaction times as specified in paragraph 3 and being initially distributed in the public spaces;

.3 the remaining 1/3 should be distributed as follows:

.1 50% should be located in service spaces and behave and a specified as in paragraph 4.2.1;

.2 25% should be located at their emergency stations and should not be explicitly modelled; and

.3 25% should be initially located at the assembly stations and should proceed towards to the most distant passenger cabin assigned to that assembly station in counterflow with evacuees; once this passenger cabin is reached, these crew are no longer considered in the simulation. The ratio between the passenger and counterflow crew should be the same in each main vertical zone.

4.3 ***Cases 3 and 4 (secondary evacuation case, night and day)***

In these cases only the main vertical zone, which generates the longest assembly time, is further investigated. These cases utilize the same population demographics as in case 1 (for case 3) and as in case 2 (for case 4). The following are two alternatives that should be considered for both case 3 and case 4. Alternative 1 should be considered if possible:

.1 alternative 1: one complete run of the stairways having largest capacity previously used within the identified main vertical zone is considered unavailable for the simulation;

.2 alternative 2: 50% of the persons in one of the main vertical zones neighbouring the identified main vertical zone are forced to move into the zone and to proceed to the relevant assembly station. The neighbouring zone with largest population should be selected.

5 Procedure for calculating the travel time T

5.1 The travel time, both that predicted by models and as measured in reality, is a random quantity due to the probabilistic nature of the evacuation process.

5.2 In total, a minimum of 50 different simulations should be carried out for each of the four-benchmark cases. This will yield, for each case, a total of at least 50 values of t_A.

5.3 These simulations should be made up of at least 10 different randomly generated populations (within the range of population demographics specified in paragraph 3). Simulations based on each of these different populations should be repeated at least 5 times. If these 5 repetitions produce insignificant variations in the results, the total number of populations analysed should be 50 rather than 10, with only a single simulation performed for each population.

5.4 The value of the travel time for each of the four cases: the value t_I is taken which is higher than 95% of all the calculated values (i.e. for each of the four cases, the times t_A are ranked from lowest to highest and t_R is selected for which 95% of the ranked values are lower).

5.5 The value of the travel time to comply with the performance standard T is the highest of the four calculated travel times t_I (one for each of the four cases).

6 Documentation of the simulation model used

6.1 The assumptions made for the simulation should be stated. Assumptions that contain simplifications above those in paragraph 3.2 of the Guidelines for the advanced evacuation analysis of new and existing passenger ships, should not be made.

6.2 The documentation of the algorithms should contain:

.1 the variables used in the model to describe the dynamics, e.g., walking speed and direction of each person;

.2 the functional relation between the parameters and the variables;

.3 the type of update, e.g., the order in which the persons move during the simulation (parallel, random sequential, ordered sequential or other);

.4 the representation of stairs, doors, assembly stations, embarkation stations, and other special geometrical elements and their influence on the variables during the simulation (if there is any) and the respective parameters quantifying this influence; and

.5 a detailed user guide/manual specifying the nature of the model and its assumptions and guidelines for the correct use of the model and interpretations of results should be readily available.

6.3 The results of the analysis should be documented by means of:

.1 details of the calculations;

.2 the total evacuation time; and

.3 the identified congestion points.

ANNEX 3

GUIDANCE ON VALIDATION/VERIFICATION OF EVACUATION SIMULATION TOOLS

1 Software verification is an ongoing activity. For any complex simulation software, verification is an ongoing activity and is an integral part of its life cycle. There are at least four forms of verification that evacuation models should undergo. These are*:

.1 component testing;

.2 functional verification;

.3 qualitative verification; and

.4 quantitative verification.

Component testing

2 Component testing involves checking that the various components of the software perform as intended. This involves running the software through a battery of elementary test scenarios to ensure that the major sub-components of the model are functioning as intended. The following is a non-exhaustive list of suggested component tests that should be included in the verification process.

Test 1: Maintaining set walking speed in corridor

3 One person in a corridor 2 m wide and 40 m long with a walking speed of 1 m/s should be demonstrated to cover this distance in 40 s.

Test 2: Maintaining set walking speed up staircase

4 One person on a stair 2 m wide and a length of 10 m measured along the incline with a walking speed of 1 m/s should be demonstrated to cover this distance in 10 s.

Test 3: Maintaining set walking speed down staircase

5 One person on a stair 2 m wide and a length of 10 m measured along the incline with a walking speed of 1 m/s should be demonstrated to cover this distance in 10 s.

Test 4: Exit flow rate

6 100 persons (p) in a room of size 8 m by 5 m with a 1 m exit located centrally on the 5 m wall. The flow rate over the entire period should not exceed 1.33 p/s.

---

* Note: This procedure has been highlighted in ISO document ISO/TR 13387-8:1999.

Test 5: Response time

7 Ten persons in a room of size 8 m by 5 m with a 1 m exit located centrally on the 5 m wall. Impose response times as follows uniformly distributed in the range between 10 s and 100 s. Verify that each occupant starts moving at the appropriate time.

Test 6: Rounding corners

8 Twenty persons approaching a left-hand corner (see figure 1) will successfully navigate around the corner without penetrating the boundaries.

Test 7: Assignment of population demographics parameters

9 Choose a panel consisting of males 30-50 years old from table 3.4 in the appendix to the Guidelines for the advanced evacuation analysis of new and existing ships and distribute the walking speeds over a population of 50 people. Show that the distributed walking speeds are consistent with the distribution specified in the table.

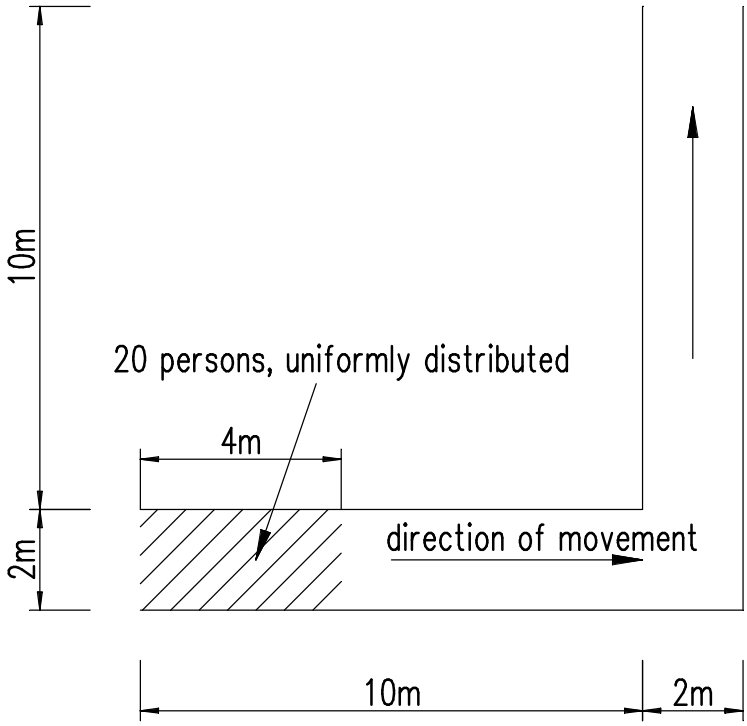

Figure 1: Transverse corridor

Functional verification

10 Functional verification involves checking that the model possesses the ability to exhibit the range of capabilities required to perform the intended simulations. This requirement is task specific. To satisfy functional verification the model developers must set out in a comprehensible manner the complete range of model capabilities and inherent assumptions and give a guide to the correct use of these capabilities. This information should be readily available in technical documentation that accompanies the software.

Qualitative verification

11 The third form of model validation concerns the nature of predicted human behaviour with informed expectations. While this is only a qualitative form of verification, it is nevertheless important, as it demonstrates that the behavioural capabilities built into the model are able to produce realistic behaviours.

Test 8: Counterflow – two rooms connected via a corridor

12 Two rooms 10 m wide and long connected via a corridor 10 m long and 2 m wide starting and ending at the centre of one side of each room. Choose a panel consisting of males 30-50 years old from table 3.4 in the appendix to the Guidelines for the advanced evacuation analysis of new and existing ships with instant response time and distribute the walking speeds over a population of 100 persons.

13 Step 1: One hundred persons move from room 1 to room 2, where the initial distribution is such that the space of room 1 is filled from the left with maximum possible density (see figure 2). The time the last person enters room 2 is recorded.

14 Step 2: Step one is repeated with an additional ten, fifty, and one hundred persons in room 2. These persons should have identical characteristics to those in room 1. Both rooms move off simultaneously and the time for the last persons in room 1 to enter room 2 is recorded. The expected result is that the recorded time increases with the number of persons in counterflow increases.

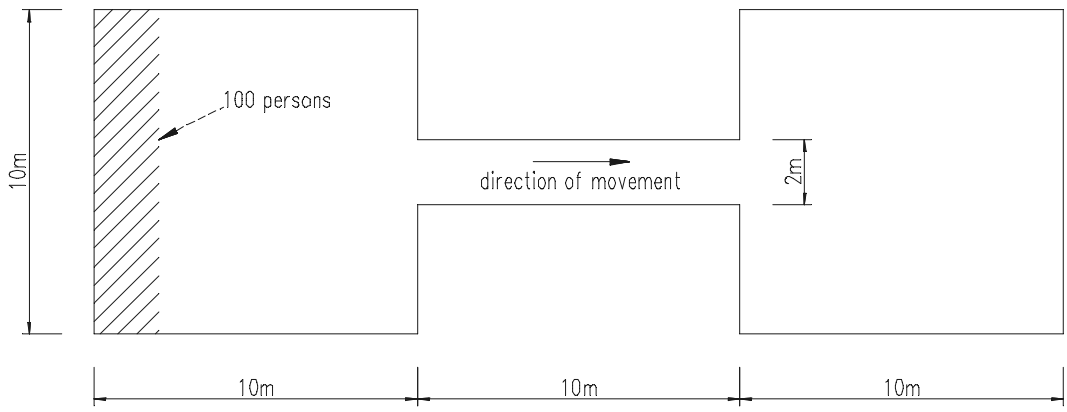

Figure 2: Two rooms connected via a corridor

Test 9: Exit flow: crowd dissipation from a large public room

15 Public room with four exits and 1,000 persons (see figure 3) uniformly distributed in the room. Persons leave via the nearest exits. Choose a panel consisting of males 30-50 years old from table 3.4 in the appendix to the Guidelines for the advanced evacuation analysis of new and existing ships with instant response time and distribute the walking speeds over a population of 1,000 persons.

Step 1: Record the time the last person leaves the room.

Step 2: Close doors 1 and 2 and repeat step 1.

The expected result is an approximate doubling of the time to empty the room.

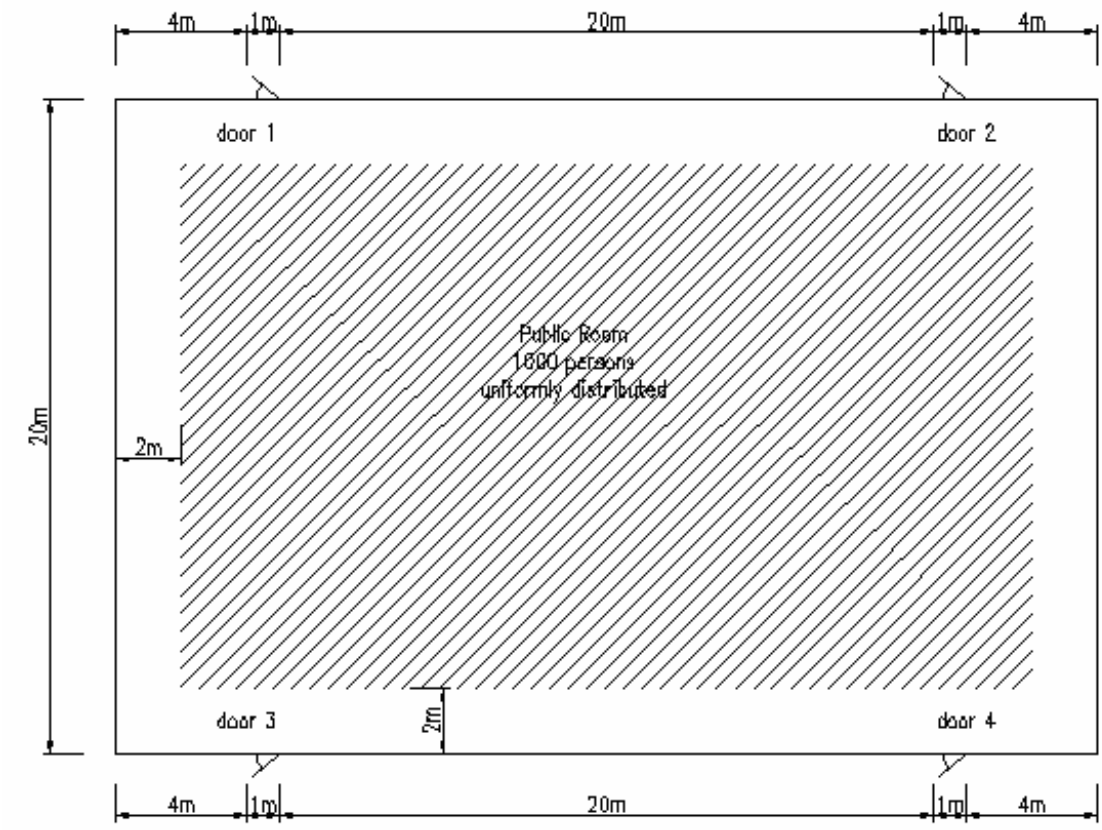

Figure 3: Exit flow from a large public room

Test 10: Exit route allocation

16 Construct a cabin corridor section as shown in figure 3 populated as indicated with a panel consisting of males 30-50 years old from table 3.4 in the appendix to the Guidelines for the advanced evacuation analysis of new and existing ships with instant response time and distribute the walking speeds over a population of 23 persons. The people in cabins 1, 2, 3, 4, 7, 8, 9, and 10 are allocated the main exit. All the remaining passengers are allocated the secondary exit. The expected result is that the allocated passengers move to the appropriate exits.

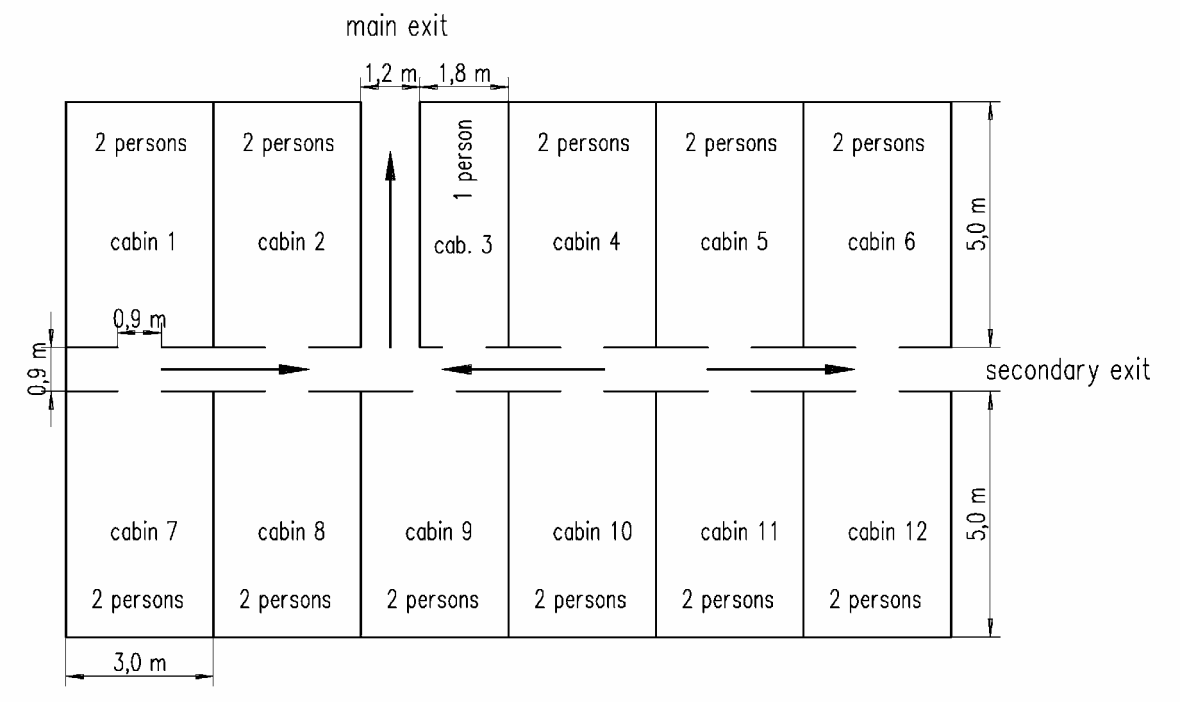

Figure 4: Cabin area

Test 11: Staircase

17 Construct a room connected to a stair via a corridor as shown in figure 4 populated as indicated with a panel consisting of males 30-50 years old from table 3.4 in the appendix to the Guidelines for the advanced evacuation analysis of new and existing ships with instant response time and distribute the walking speeds over a population of 150 persons. The expected result is that congestion appears at the exit from the room, which produces a steady flow in the corridor with the formation of congestion at the base of the stairs.

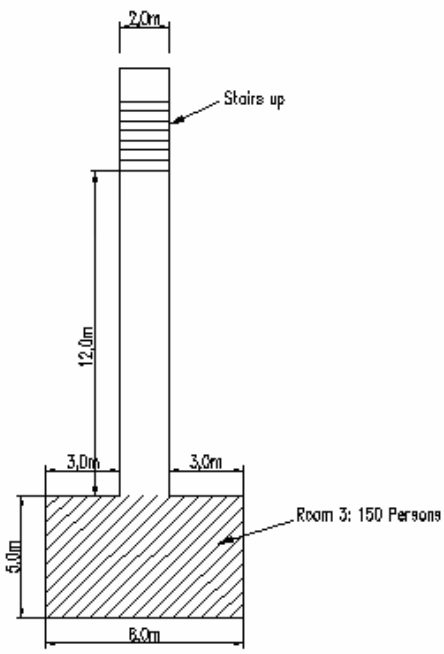

Figure 5: Escape route via stairs

Quantitative verification

18 Quantitative verification involves comparing model predictions with reliable data generated from evacuation demonstrations. At this stage of development there is insufficient reliable experimental data to allow a thorough quantitative verification of egress models. Until such data becomes available the first three components of the verification process are considered sufficient.

***

ANNEX 6

JUSTIFICATION FOR THE PROPOSAL FOR A NEW WORK PROGRAMME ITEM (in accordance with MSC-MEPC.1/Circ.1)

HARMONIZATION OF THE REQUIREMENTS FOR THE LOCATION OF ENTRANCES, AIR INLETS AND OPENINGS IN THE SUPERSTRUCTURES OF TANKERS

1 Scope of the proposal

Harmonize the admissible distances required in the 1974 SOLAS Convention and the IBC and IGC Codes for entrances, air inlets and openings in the superstructures of tankers, taking into account the publication IEC 60092-502, the unified interpretations contained in MSC/Circ.474, MSC/Circ.1120 and MSC/Circ.1203 and the relevant IACS unified interpretations (FP 51/9/4 and FP 51/9/7).

2 Compelling need

A new work programme item is necessary to enable the Sub-Committee to develop amendments to SOLAS regulation II-2/4.5.2, paragraphs 3.2.3 and 3.7.4 of the IBC Code and paragraphs 3.2.3 and 3.2.4 of the IGC Code to harmonize the requirements contained in the aforementioned provisions, including the incorporation, as appropriate, of the relevant unified interpretations developed by IMO and IACS and the criteria contained in publication IEC 60092-502, in order to ensure consistent implementation of the relevant IMO instruments.

3 Analysis of the issues involved, having regard to the costs to the maritime industry and global legislative and administrative burdens

The purpose of this harmonization would be primarily to ensure that a consistent application (and simplified) requirements by ship owners and builders, which are currently hindered by the different provisions in IMO instruments and international standards.

As long as it is planned to apply the harmonized regulation to new ships, there will not be any cost or administrative or legal burden.

4 Benefits

Administrations, or recognized organizations acting on their behalf, will apply the aforementioned requirements in a uniform manner, and ship owners and builders will benefit by being provided with consistent and unambiguous requirements.

5 Priority and target completion date

This matter should have a high priority in view of the considerable concern of Administrations, recognized organizations and ship builders and in order to avoid possible explosions in tankers related to ambiguous requirements for the aforementioned ignition sources.

It is expected that only two sessions will be needed to properly deal with this matter in the FP Sub-Committee.

6 Specific indication of action required

Develop a set of amendments to SOLAS regulation II-2/4.5, paragraph 3.7 of the IBC Code and paragraph 3.2 of the IGC Code to harmonize their requirements, taking into account the relevant IMO and IACS unified interpretations (FP 51/9/4 and FP 51/9/7) and publication IEC 60092-502.

7 Remarks on the criteria for general acceptance

.1 The subject of the proposal is within the scope of IMO objectives.

.2 The item is within the relevant provisions of the Strategic plan for the Organization and the High-level action plan.

.3 Adequate industry standards do exist, but they are inconsistently applied.

.4 It is believed that the benefits do justify the proposed action.

8 Identification of which subsidiary bodies are essential to complete the work

The work should be able to be accomplished by the FP Sub-Committee and the BLG Sub-Committee, if requested by the FP Sub-Committee.

***

ANNEX 7

DRAFT MSC CIRCULAR

UNIFIED INTERPRETATIONS OF SOLAS CHAPTER II-2

1 The Maritime Safety Committee, at its [eighty-third session (3 to 12 October 2007)], with a view to providing more specific guidance for application of the relevant requirements, of the 1974 SOLAS Convention, approved the unified interpretations of SOLAS chapter II-2 prepared by the Sub-Committee on Fire Protection, at its fifty-first session, as set out in the annex.

2 Member Governments are invited to use the annexed unified interpretations as guidance when applying relevant provisions of SOLAS chapter II-2 to fire protection construction, installation, arrangements and equipment to be installed on board ships constructed on or after [*date of approval of the circular*] and to bring the unified interpretations to the attention of all parties concerned.

ANNEX

UNIFIED INTERPRETATIONS OF SOLAS CHAPTER II-2

Regulations II-2/3.6 and II-2/4.5.1.1 – Protection of fuel oil

1 A void space or ballast water tank protecting a fuel oil tank, in accordance with MARPOL, as shown in figure 1, need not be considered as a "cargo area" as defined in SOLAS regulation II-2/3.6 even though they have a cruciform contact with the cargo oil tank or slop tank.*

2 The void space protecting a fuel oil tank, in accordance with MARPOL, is not considered as a cofferdam as specified in SOLAS regulation II-2/4.5.1.1. Therefore, location of the void space shown in figure 1 should be considered acceptable even though they have a cruciform contact with the slop tank.

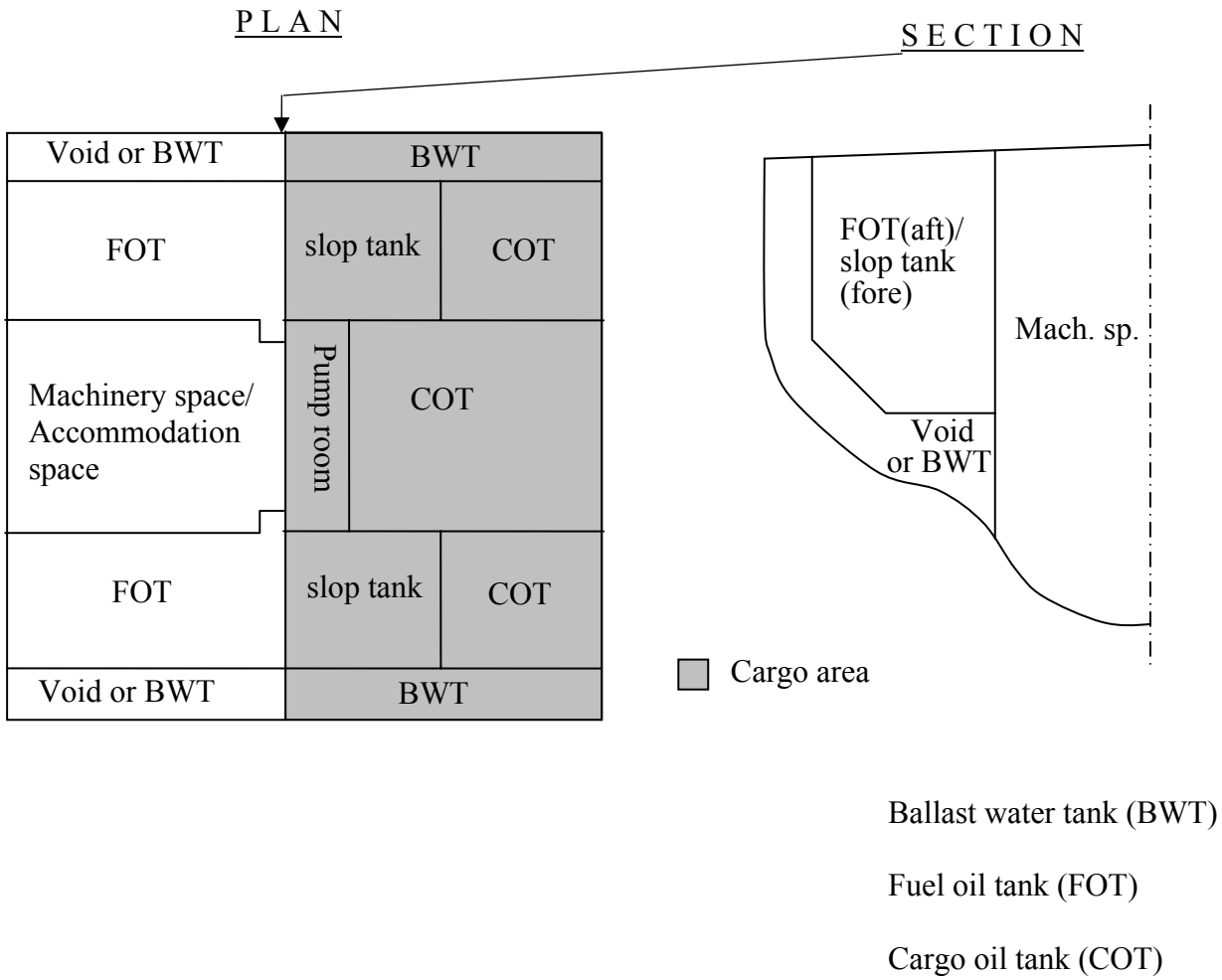

Figure 1

* As defined by MARPOL 73/78.

Regulations II-2/4.5.1.2 and II-2/4.5.1.3 – Location of paint lockers within the cargo block

1 Paint lockers, regardless of their use, should not be located above the tanks and spaces defined in SOLAS regulation II-2/4.5.1.2 for oil tankers and the cargo area for chemical tankers.

Regulation II-2/9.7.3.1.2 – Fire category of fan rooms serving engine-rooms

1 A fan room solely serving the engine-room or multiple spaces containing an engine-room, may be treated as machinery space having little or no fire risk. In this case:

.1 boundaries between the fan room and engine-room casing should be of "A-0" fire integrity;

.2 duct penetrations should comply with SOLAS regulation II-2/9.7.3.1.2;

.3 ducts serving the engine-room should be routed directly to the relevant fan(s) and from the fan to the louvers; and

.4 closing of the ventilation duct to/from the engine-room should be possible from outside the engine-room. In this case, the controls for the closing of the engine-room ventilation duct (i.e., a fire damper installed in accordance with SOLAS regulation II-2/9.7.3.1.2) can be located inside the fan room.

2 A fan room solely serving the engine-room may be considered as part of the engine-room. In this case:

.1 requirements for fire integrity of the horizontal boundary between fan room and engine-room need not apply; and

.2 closing the ventilation duct to/from engine-room should be possible from outside the engine-room. In this case, the controls for closing of the ventilation trunk (i.e., a fire damper installed as per SOLAS regulation II-2/9.7.3.1.2) should be located outside the fan room.

3 For both of the cases described above:

.1 for any space(s) adjacent to the fan room superstructure, the fire integrity of the separating bulkhead(s) should meet the applicable fire integrity requirements contained in the table set out in SOLAS regulation II-2/9; and

.2 the CLIA* requirements relevant to the means of closing for downflooding protection should be applied, if necessary.

* Cruise Lines International Association.

Regulation II-2/10.4.3 – Storage of fire-extinguishing media forward the cargo holds

1 Fire-extinguishing media protecting the cargo holds may be stored in a room located forward of the cargo holds, but aft of the collision bulkhead or aft its imaginary vertical line, provided that both the local manual release mechanism and remote control(s) for the release of the media are fitted, and that the latter is of robust construction or so protected as to remain operable in case of fire in the protected spaces. The remote controls should be placed in the accommodation area in order to facilitate their ready accessibility by the crew. The capability to release different quantities of fire-extinguishing media into different cargo holds so protected should be included in the remote release arrangement.

Regulation II-2/20.6.2 – Portable fire-fighting appliances in cargo holds loaded with vehicles with fuel in their tanks

1 Cargo holds loaded with vehicles with fuel in their tanks which are stowed in open or closed containers need not to be provided with portable fire extinguishers, water-fog applicators and foam applicator units.

***

ANNEX 8

DRAFT MSC CIRCULAR

UNIFIED INTERPRETATION OF THE INTERNATIONAL FIRE SAFETY SYSTEMS CODE

1 The Maritime Safety Committee, at its [eighty-third session (3 to 12 October 2007)], with a view to providing more specific guidance for application of the relevant requirements of chapter 5 of the International Fire Safety Systems Code (FSS Code), approved the unified interpretation of the FSS Code, prepared by the Sub-Committee on Fire Protection, at its fifty-first session, as set out in the annex.

2 Member Governments are invited to use the annexed unified interpretation as guidance when applying relevant provisions of chapter 5 of the FSS Code for ships constructed on or after [*date of approval of the circular*] and to bring the unified interpretation to the attention of all parties concerned.

ANNEX

UNIFIED INTERPRETATION OF THE INTERNATIONAL FIRE SAFETY SYSTEMS CODE

Paragraph 2.1.3.3 – Storage of fire-extinguishing media forward the cargo holds

1 Fire-extinguishing media protecting the cargo holds may be stored in a room located forward the cargo holds, but aft of the collision bulkhead or aft its imaginary vertical line, provided that both the local manual release mechanism and remote control(s) for the release of the media are fitted, and that the latter is of robust construction or so protected as to remain operable in case of fire in the protected spaces. The remote controls should be placed in the accommodation area in order to facilitate their ready accessibility by the crew. The capability to release different quantities of fire-extinguishing media into different cargo holds so protected should be included in the remote release arrangement.

***

ANNEX 9

DRAFT MSC CIRCULAR

UNIFIED INTERPRETATION OF THE INTERNATIONAL BULK CHEMICALS CODE

1 The Maritime Safety Committee, at its [eighty-third session (3 to 12 October 2007)], with a view to providing more specific guidance for application of the relevant requirements of the International Bulk Chemicals Code (IBC Code), approved a unified interpretation of chapter 3 of the IBC Code prepared by the Sub-Committee on Fire Protection, at its fifty-first session, as set out in the annex.

2 Member Governments are invited to use the annexed unified interpretation as guidance when applying relevant provisions of chapter 3 of the IBC Code for ships constructed on or after [*date of approval of the circular*] and to bring the unified interpretation to the attention of all parties concerned.

ANNEX

UNIFIED INTERPRETATION OF THE INTERNATIONAL BULK CHEMICALS CODE

Paragraph 3.2.1 – Location of paint lockers within cargo block

1 Paint lockers, regardless of their use, should not be located above the tanks and spaces, defined in SOLAS regulation II-2/4.5.1.2, in case of oil tankers and the cargo area, in case of chemical tankers.

***

ANNEX 10

DRAFT MSC CIRCULAR

GUIDELINES FOR THE APPROVAL OF FIXED PRESSURE WATER-SPRAYING AND WATER-BASED FIRE-EXTINGUISHING SYSTEMS FOR CABIN BALCONIES

1 The Committee, at its [eighty-third session (3 to 12 October 2007)], having recognized the need for guidelines for fixed pressure water-spraying fire-extinguishing systems for cabin balconies, taking into account the amendments to SOLAS chapter II-2 and the FSS Code adopted by resolutions MSC.216(82) and MSC.217(82), considered the proposal by the Sub-Committee on Fire Protection at its fifty-first session and approved the Guidelines for the approval of fixed pressure water-spraying and water-based fire-extinguishing systems for cabin balconies, as set out in the annex.

2 Member Governments are invited to apply the attached Guidelines when approving fixed pressure water-spraying and water-based fire-extinguishing systems for cabin balconies on passenger ships for systems to be installed on or after 1 July 2008 and bring them to the attention of ship designers, ship owners, equipment manufacturers, test laboratories and other parties concerned.

ANNEX

GUIDELINES FOR THE APPROVAL OF FIXED PRESSURE WATER-SPRAYING AND WATER-BASED FIRE-EXTINGUISHING SYSTEMS FOR CABIN BALCONIES

1 General

Fixed pressure water-spraying fire-extinguishing systems, as required by SOLAS regulation II-2/10.6.1.3, for the protection of cabin balconies where furniture and furnishings other than those of restricted fire risk are used should be shown by test to have the capability of suppressing typical fires expected in such areas, and preventing them from spreading to the adjacent cabin and to other balconies. These Guidelines should be applied when approving fixed pressure water-spraying and water-based fire-extinguishing systems for cabin balconies on passenger ships to be installed on or after 1 July 2008.

1.2 Definitions

1.2.1 *Automatic system* is a system with automatic nozzles. Each head must be individually activated by heat from the fire before water will be discharged.

1.2.2 *Manually released system* is a pipework system with open nozzles, controlled by section valves. When a section valve is opened, all of the connected nozzles will discharge water simultaneously.

2 Principal requirements for the system

2.1 The system should either be automatic or capable of manual release from a location remote from the protected area.

2.2 The system should be capable of fire suppression based on testing conducted in accordance with the appendix to these guidelines.

2.3 The system should be capable of fire suppression on open deck areas with expected wind conditions while the vessel is underway. The fire test does not require the use of actual wind velocities; instead, a nominal wind speed is included to account for variables in balcony geometry and related issues. Although the test ventilation conditions are intended to provide a safety factor, it is recognized that in an actual fire, the master and crew are expected to take appropriate actions to manoeuvre the ship to assist the suppression system.

2.4 The system should be available for immediate use and capable of continuously operating for at least 30 min.

2.5 The system and its components should be suitably designed to withstand ambient temperature changes, vibration, humidity, shock, impact, clogging and corrosion normally encountered on open deck areas. Open head nozzles should be tested in accordance with appendix A of MSC/Circ.1165*. Automatic nozzles should be tested in accordance with appendix 1 of resolution A.800(19)*.

---

* These IMO instruments have been amended by MSC/Circ.[…] and resolution MSC…[…], respectively.

2.6 The location, type and characteristics of the nozzles should be within the limits tested, as referred to in the appendix. Nozzle positioning should take into account obstructions to the spray of the fire-fighting system. Automatic nozzles should have fast response characteristics as defined in ISO standard 6182-1.

2.7 The piping system should be sized in accordance with a hydraulic calculation technique such as the Hazen-Williams hydraulic calculation technique* and the Darcy-Weisbach hydraulic calculation technique, to ensure availability of flows and pressures required for correct performance of the system.

2.8 The minimum capacity and design of the supply system for a manually released system should be based on the complete protection of the most hydraulically demanding section. The minimum capacity and design of the supply system for an automatic system should be based on the complete protection of the eight most hydraulically remote balconies.

2.9 The water supply for cabin balcony systems may be fed from an independent supply, or they may be fed from the supply to another water-based fire-fighting system providing that adequate water quantity and pressure are available as indicated below:

.1 Manually released systems: The water supply should be capable of supplying the largest balcony section and, if supplied by the sprinkler system, the capacity should be adequate to supply eight adjacent cabins. If supplied by the fire main, the system should be capable of supplying the largest balcony section plus the two jets of water required by SOLAS regulation II-2/10.2.1.3 and II-2/10.2.1.6.

.2 Automatic systems: The water supply should be capable of supplying the eight most hydraulically demanding balconies. If combined with the sprinkler system, the design area in total need not exceed 280 m^2.

2.10 The system should be grouped into sections. A manually released section should not serve cabin balconies on both sides of the ship, except that the same section may serve balconies located on one side of the ship and balconies in the fore or aft end of the ship.

2.11 The system section valves and operation controls should be located at easily accessible positions outside the protected space, not likely to be cut off by a fire in the cabin balconies.

2.12 A means for testing the operation of the system for assuring the required pressure and flow should be provided.

---

* Where the Hazen-Williams Method is used, the following values of the friction factor "C" for different pipe types which may be considered should apply:

Pipe type	C factor
Black or galvanized mild steel	100
Copper and copper alloys	150
Stainless steel	150

2.13 Activation of any water supply pump should give a visual and audible alarm at a continuously manned central control station or onboard safety centre.

2.14 Any parts of the system which may be subjected to freezing temperatures in service should be suitably protected against freezing.

2.15 The system should be provided with a redundant means of pumping or otherwise supplying the discharge nozzles. The capacity of the redundant means should be sufficient to compensate for the loss of any single pump or supply source. The system should be fitted with a permanent sea inlet and be capable of continuous operation using seawater.

2.16 Operating instructions for the system should be displayed at each operating position.

2.17 Spare parts and operating and maintenance instructions for the system should be provided as recommended by the manufacturer.

2.18 Dry pipe systems should be arranged such that water will discharge from the farthest sprinkler within 60 s of actuation of the sprinkler.

APPENDIX

TEST METHOD FOR FIXED PRESSURE WATER-SPRAYING AND WATER-BASED FIRE-EXTINGUISHING SYSTEMS FOR CABIN BALCONIES

1 SCOPE

1.1 This test method is intended for evaluating the effectiveness of fixed pressure water-spraying and water-based fire-extinguishing systems for cabin balconies.

1.2 It was developed for ceiling or sidewall mounted nozzles located to protect external cabin balconies that are open to the atmosphere with natural wind conditions.

1.3 Systems for the protection of cabin balconies are intended for either automatic or manual operation.

2 GENERAL REQUIREMENTS

2.1 The nozzles and other system components should be supplied by the manufacturer with design and installation criteria, operating instructions, drawings, and technical data sufficient for the identification of the components.

2.2 Temperatures should be measured using plain K-type thermocouple wires not exceeding 0.5 mm in diameter. The thermocouple beads should be shielded to protect against direct water impingement.

2.3 Unless otherwise stated, the following tolerances should apply:

.1	Length	± 2% of value
.2	Pressure	± 3% of value
.3	Temperature	± 2% of value

2.4 System water pressure should be measured by using suitable equipment. Total water flow rate should be determined by a direct measurement or indirectly by using the pressure data and k-factor of the nozzles.

2.5 Wind velocity should be measured by using suitable equipment.

2.6 The temperature and pressure measurements should be made continuously, at least once in every two seconds throughout the tests.

2.7 The tests should simulate the conditions of an actual installed system regarding objectives such as time delays between the activation of the system and minimum system water pressure or water delivery. In addition, the use of a pre-primed fire suppression enhancing additive, if applicable, should be taken into account.

3 FIRE TESTS

3.1 Test principles

3.1.1 These tests are intended to evaluate the fire-suppression capabilities of nozzles used for the protection of cabin balconies against external fires in furniture and furnishings of other than restricted fire risk. The primary objective of the test is to evaluate the ability of the system to prevent a fire on a cabin balcony from spreading to the adjacent cabin and to other balconies.

3.1.2 The tests also define the following design and installation criteria:

.1 the maximum coverage (length and width) of a single nozzle; and

.2 the minimum operating pressure.

3.2 Test description

3.2.1 Fire test compartment

3.2.1.1 These tests are intended to evaluate the nozzle's fire-suppression capabilities against external fires on open cabin balconies. The tests may be conducted inside a well ventilated test hall having a specified area of at least 100 m^2, a specified height of at least 5 m and adequate natural or forced ventilation to ensure that there is no restriction in air supply to the test fires. The fire test hall should have an ambient temperature of 20 ± 5°C at the start of each test.

3.2.2 Apparatus

3.2.2.1 The fire tests should be conducted in a test apparatus consisting of a balcony mock-up in accordance with figure 1. The balcony ceiling should be smooth to allow an unobstructed flow of gases.

3.2.2.2 The mock-up should be constructed of nominally 12 mm thick non-combustible wallboard panels. Plywood panels should be attached to the wall below the ventilation channel opening, and on the back wall, covering at least 2 m horizontally, starting from the fan side corner. The panels should be 2 m high and 3 to 4 mm thick. The ignition time of the panel should not be more than 35 s and the flame spread time at 350 mm position should not be more than 100 s as measured in accordance with the FTP Code. Prior to the test, the plywood panels should be conditioned at 21± 2.8º C and 50 ± 10% relative humidity for at least 72 h.

3.2.2.3 The dimensions of the balconies should be in accordance with figure 1, or may be increased up to the maximum coverage area (length and width) to be protected by one nozzle.

3.2.2.4 A fan should be attached to the balcony mock-up, as indicated in figure 1. The fan should provide an average air velocity of 5 m/s. Typically, sufficient dimensions of the fan are 0.8 m in diameter with a power of 5.5 kW.

For ceiling nozzles, the velocity measurements should be done at nine locations; at the nozzle and around it on a circle of 0.5 m radius (figure 3(a)). For sidewall nozzles, the measurement should be done in six locations, at the nozzle and around it on a half-circle of 0.5 m radius

(figure 3(b)). In vertical direction, the measurement should be done in the middle of the wind channel (25 cm from the ceiling). The intention is to distribute measurement locations over the region where the wind affects the suppression medium flow.

3.2.3 Fire source

3.2.3.1 The fire source should consist of a wood crib, two simulated chairs and a table mock-up.

3.2.3.2 Each chair should be fitted with two 0.5 m by 0.8 m by 0.1 m polyether cushions. The cushions should be made of non-fire retardant polyether and they should have a density of approximately 33 kg/m^3. When tested according to ISO 5660-1 (ASTM E-1354), the polyether foam should give results as given in the table below.

The frame of the chairs should be of steel nominally 2 mm thick consisting of rectangular bottom and backrest frames constructed of steel angles, channels or rectangular stock of at least 3 mm thickness. The frame dimensions should be 0.5 m x 0.8 m (figure 2). The seat and backrest cushions should be supported on each frame by steel bars 20-30 mm wide x 0.80 m long located in the centre of the frames and welded to the edges. Steel plates should not be used to support the cushions. The assembled frames should be supported by four legs 500 mm in height constructed of similar steel stock. The frames should be equipped with a metal wire net to support the cushions, and the backrest should be tied in place, to keep from falling over during the test. The backrest should be placed on top of the seat cushion.

ISO 5660, Cone calorimeter test

Test conditions:

Irradiance 35 kW/m^2
Horizontal position
Sample thickness 50 mm
No frame retainer should be used

Test results	**Foam**
Time to ignition (s)	2-6
3 minute average HRR, q_{180}	270±50
Minimum heat of combustion (MJ/kg)	25
Total heat release (MJ/m^2)	50±12

3.2.3.3 A table should be constructed of a similar steel stock as the chairs. The table should have a 0.5 m by 0.5 m metal frame, supported by four legs, 520 mm in height. A 0.5 m by 0.5 m table plate should be fitted into the frame, cut out of 12 mm plywood made of spruce or pine. The ignition time of the plywood should be not more than 35 s and the flame spread time at the 350 mm position should be not more than 100 s as measured in accordance with Part 5 of Annex 1 of the FTP Code.

3.2.3.4 The two chairs should be placed in the fan side corner of the balcony, in such a way that the polyether foam is 0.1 m from the plywood panel, according to figures 3 and 4, corners of the

cushions touching. The table should be placed in the corner, edges aligned with the ends of the chairs.

3.2.3.5 The wood crib should be dimensioned 0.3 m x 0.3 m x 0.15 m (high). The crib should consist of four alternate layers of four trade size nominal 38 mm x 38 mm kiln-dried spruce or fir lumber 0.3 m long. The alternate layers of the lumber should be placed at right angles to the adjacent layers. The individual wood members in each layer should be evenly spaced along the length of the previous layer of wood members and stapled together. After the wood crib is assembled, it should be conditioned at a temperature of 50 ±5ºC for not less than 16 h. Following the conditioning, the moisture content of the crib should be measured at various locations with a probe-type moisture meter. The moisture content of the crib should not exceed 5% prior to the fire test.

3.2.3.6 A square steel tray of area 0.1 m^2 and height 0.1 m should be located under the table, so that its corner is next to the point where chairs touch. The wood crib should be supported directly over the tray, edges aligned with the chair ends. The top of the wood crib should be 0.27 m above the floor level (figure 4).

3.2.3.7 For ignition, the tray should be filled with 1 *l* of water and 250 ml of commercial heptane.

3.2.4 Nozzle installation requirements

3.2.4.1 The tests with the given balcony dimensions are intended for a single nozzle protection. The single nozzle has to be located symmetrically in the balcony, at the centreline in the position recommended by the manufacturer's installation instructions, vertically at least 0.4 m above the lower edge of the wind channel. The two most conceivable locations are shown in figure 3.

3.2.4.2 If the nozzle is located closer to the fan side wall than at the centreline, the protection width of the nozzle will be less than 3 m, i.e., twice the tested distance between the nozzle and wall. If a larger than 3 m protection width is aimed at, a wider balcony should be constructed for the test.

3.2.4.3 The nozzle should be connected to a suitable water supply and arranged to operate at the minimum pressure specified by the manufacturer.

3.2.4.4 The tests should be repeated using two nozzle orientations, where applicable. At first, the lowest discharge density should be directed towards the cabin wall, and then, towards the fan side wall.

3.2.5 Instrumentation

3.2.5.1 Thermocouples should be installed at four locations; two on the front edge of the balcony ceiling, one 1 m and the other 2 m from the fan side wall, one of the back edge of the ceiling, 2 m from the fan side wall and one in the centre of the side wall opposite the fan.

3.2.5.2 System water pressure should be measured near the nozzle, and the system water flow rate should be defined with suitable means for the system.

4 TEST METHOD

4.1 Test programme

4.1.1 Two tests should be done for each type of nozzle. One test with wind, and one without.

4.1.2 In the wind test, the fan should be started before ignition and operated continuously during the test. The wind velocity should be measured when it has levelled, before ignition as defined in 3.2.2.5.

4.1.3 Automatic nozzles should be tested with the fusible element removed.

4.2 Ignition

The heptane in the tray should be ignited using a gas burner, long stick, match or equivalent.

4.3 Pre-burn time

Each fire should be ignited and allowed to burn for 120 s prior to the sprinkler system operation.

4.4 Test duration

The sprinkler system should be manually activated at the end of the pre-burn period. The test should be conducted for 10 min after the sprinkler system is activated, and any remaining fire should be manually extinguished.

4.5 Observations during the test

During the test, following observations should be recorded:

.1 activation time of ventilation system (if applicable);

.2 time of ignition;

.3 activation time of the extinguishing system;

.4 time of ignition of the plywood panels (if any);

.5 time of extinguishment, if any; and

.6 time when the test is terminated.

5 ACCEPTANCE CRITERIA

5.1 For all tests, there should be no ignition of the plywood panels.

5.2 For the test without wind, 15 s after activation of the system, none of the thermocouples should show temperatures exceeding 150ºC.

6 TEST REPORT

The test report should, as a minimum, include the following information:

.1 name and address of the test laboratory;

.2 date of issue and identification number of the test report;

.3 name and address of applicant;

.4 name and address of manufacturer or supplier of the nozzles;

.5 test method and purpose;

.6 nozzle identification;

.7 description of the tested nozzle;

.8 detailed drawings/photos of the test set-up;

.9 date of tests;

.10 measured nozzle pressure and flow characteristics;

.11 identification of the test equipment and used instruments;

.12 test results including observations and measurements made during and after the test:

.1 maximum protected area per nozzle; and

.2 minimum operating pressures;

.13 deviations from the test method;

.14 conclusions; and

.15 date of the report and signature.

Figure 1: Balcony Mock-up

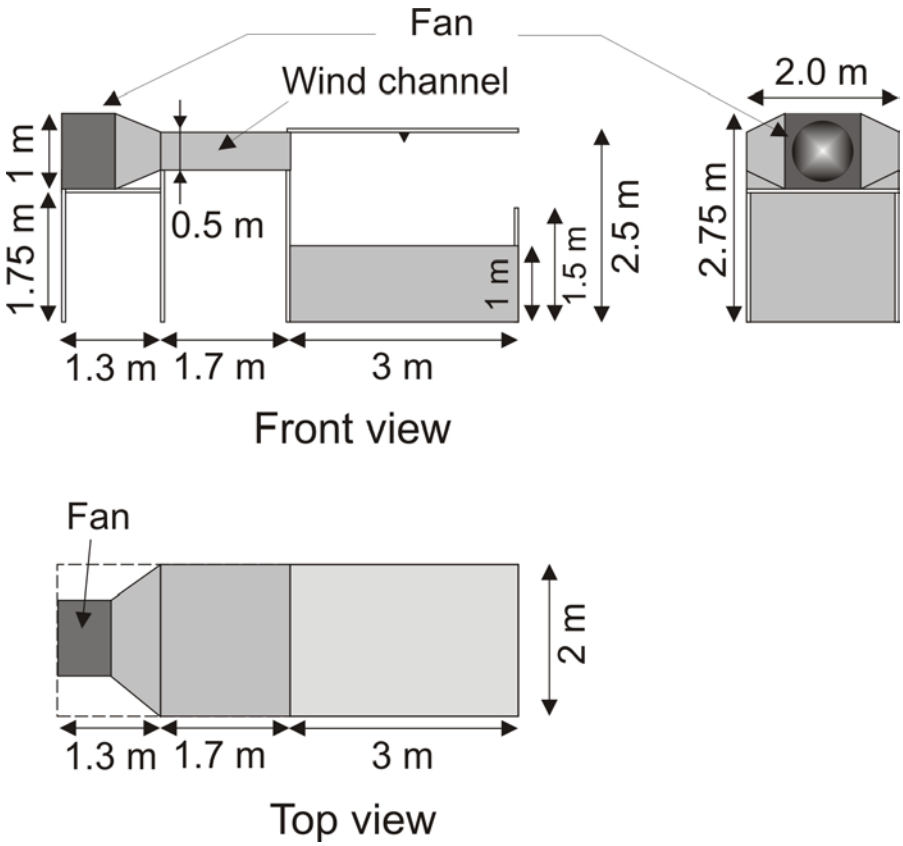

Figure 2: Chair frame

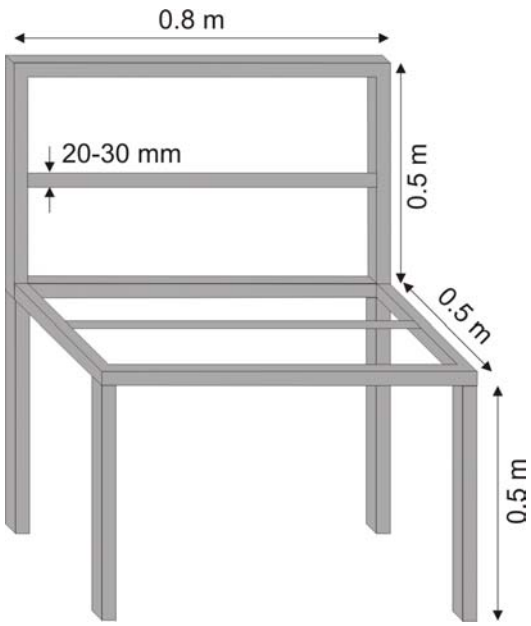

Figure 3: Fire scenario and measurements. Thermocouple locations (x) and wind measurement positions (.) for (a) ceiling nozzle, (b) sidewall nozzle

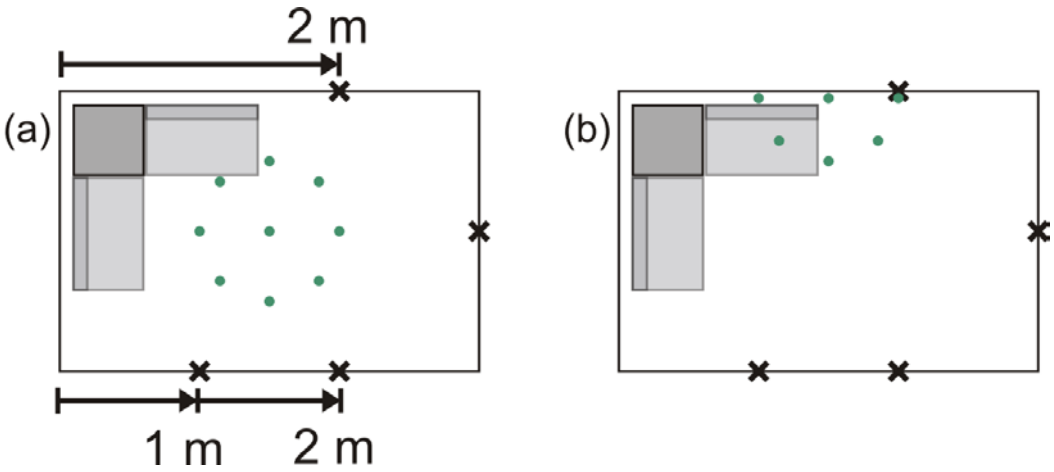

Figure 4: Fire source

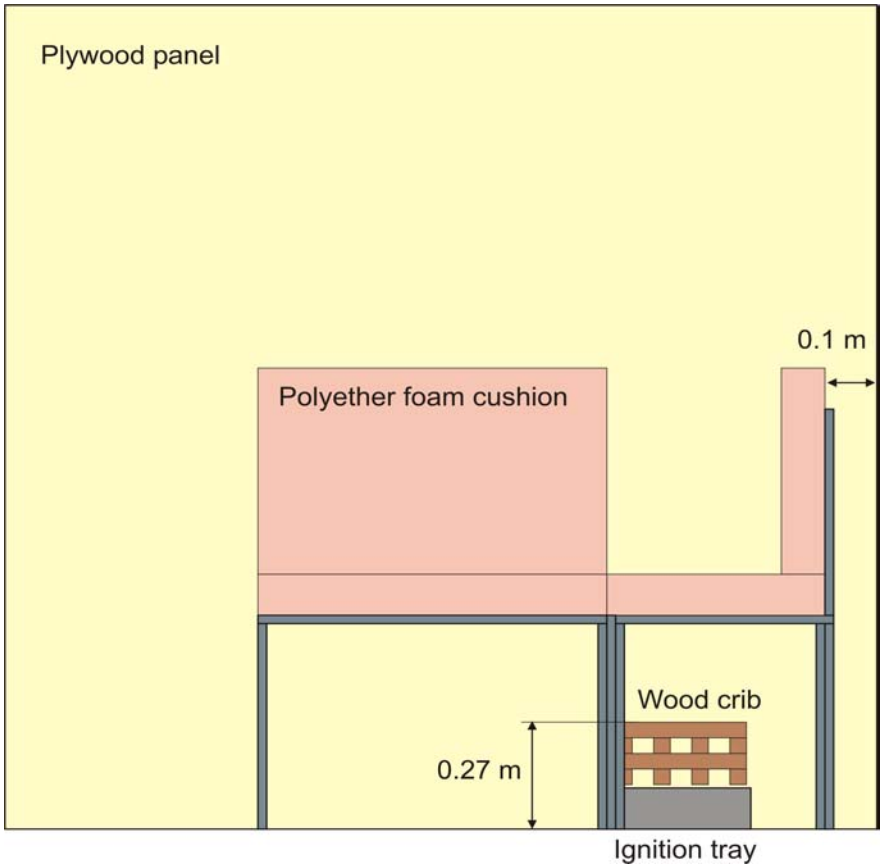

***

ANNEX 11

DRAFT MSC CIRCULAR

GUIDELINES FOR THE APPROVAL OF FIXED FIRE DETECTION AND FIRE ALARM SYSTEMS FOR CABIN BALCONIES

1 The Committee, at its [eighty-third session (3 to 12 October 2007)], having recognized the need for guidelines for the approval of fixed fire detection and fire alarm systems for cabin balconies, taking into account the amendments to SOLAS chapter II-2 and the FSS Code adopted by resolutions MSC.216(82) and MSC.217(82), considered the proposal by the Sub-Committee on Fire Protection at its fifty-first session and approved Guidelines for the approval of fixed fire detection and fire alarm systems for cabin balconies, as set out in the annex.

2 Member Governments are invited to apply the attached Guidelines when approving fixed fire detection and fire alarm systems for cabin balconies on passenger ships for systems installed on or after 1 July 2008 and bring them to the attention of ship designers, ship owners, equipment manufacturers, test laboratories and other parties concerned.

ANNEX

GUIDELINES FOR THE APPROVAL OF FIXED FIRE DETECTION AND FIRE ALARM SYSTEMS FOR CABIN BALCONIES

1 General

Fixed fire detection and fire alarm systems, as required by SOLAS regulation II-2/7.10, for the protection of cabin balconies where furniture and furnishings other than those of restricted fire risk are used should be shown by test to have the capability of detecting typical fires expected in such areas before they spread to the adjacent cabin and to other balconies. These Guidelines should be applied when approving fixed fire detection and fire alarm systems for cabin balconies on passenger ships to be installed on or after 1 July 2008.

2 Principal requirements for the system

2.1 The system should be capable of immediate operation at all times.

2.2 The system should be capable of fire detection based on testing conducted in accordance with internationally recognized standards or as prescribed by the Administration.

2.3 The system should be capable of fire detection on cabin balconies with expected wind conditions while the vessel is underway.

2.4 The system and its components should be suitably designed to withstand ambient temperature changes, vibration, humidity, shock, corrosion and impact normally encountered on ships. External components should additionally be designed to withstand sun irradiation, ultraviolet exposure, water ingress and corrosion normally encountered on open deck areas.

2.5 If detectors are not remotely and individually identifiable dedicated to cabin balconies only, the detectors should be grouped into sections. The system indicating units should, as a minimum, denote the section in which a detector has been activated.

2.6 The location and spacing of the detectors should be within the limits tested.

2.7 There should be not less than two sources of power supply for the electrical equipment used in the operation of the fixed fire detection and fire alarm system, one of which should be an emergency source. The supply should be provided by separate feeders reserved solely for that purpose. Such feeders should run to an automatic change-over switch situated in or adjacent to the control panel for the fire detection system.

2.8 Detectors should be operated by heat, smoke or other products of combustion, flame, or any combination of these factors. Detectors operated by other factors indicative of incipient fires may be considered by the Administration provided that they are no less sensitive than such detectors.

2.9 All detectors should be of a type such that they can be tested for correct operation and restored to normal surveillance without the renewal of any component.

2.10 The activation of any detector shall initiate a visual and audible fire signal* at the control panel and indicating units. If the signals have not received attention within 2 min an audible alarm shall be automatically sounded throughout the crew accommodation and service spaces, control stations and machinery spaces of category A. This alarm sounder system need not be an integral part of the detection system.

2.11 The control panel should be located on the navigation bridge or in the onboard safety centre.

2.12 At least one indicating unit should be so located that it is easily accessible to responsible members of the crew at all times.

2.13 Clear information should be displayed on or adjacent to each indicating unit about the spaces covered and the location of the sections.

2.14 Power supplies and electric circuits necessary for the operation of the system should be monitored for loss of power or fault conditions as appropriate. Occurrence of a fault condition should initiate a visual and audible fault signal at the control panel which should be distinct from a fire signal.

2.15 Suitable instructions and component spares for testing and maintenance should be provided, taking into account any special requirements for detectors located in external areas. Detectors should be periodically tested using equipment suitable for the types of fires to which the detector is designed to respond. Ships with self-diagnostic systems that have in place a cleaning regime for areas where heads may be prone to contamination, may carry out testing in accordance with the requirements of the Administration.

***

* Refer to the Code on Alarms and Indicators as adopted by the Organization by resolution A.830(19).

ANNEX 12

PROPOSED REVISED WORK PROGRAMME OF THE SUB-COMMITTEE AND PROVISIONAL AGENDA FOR FP 52

PROPOSED REVISED WORK PROGRAMME OF THE SUB-COMMITTEE

		Target completion date/number of sessions needed for completion	Reference
1	**Analysis of fire casualty records**	Continuous	MSC 75/24, paragraph 22.18; FP 51/19, section 10
2	**Consideration of IACS unified interpretations**	Continuous	MSC 78/26, paragraph 22.12; FP 51/19, section 9
H.1	**Performance testing and approval standards for fire safety systems**	2009	MSC 74/24, paragraph 21.12; FP 51/19, section 3
H.2	**Comprehensive review on the Fire Test Procedures Code**	2008	MSC 80/24, paragraph 21.11; FP 51/19, section 4
~~H.3~~	~~**Recommendation on evacuation analysis for new and existing passenger ships**~~	~~2008~~	~~MSC 73/21, paragraph 4.16~~
H.4	**Review of the SPS Code** (co-ordinated by DE)	~~2007~~ 2008	MSC 78/26, paragraph 24.9; FP 51/19, section 6
H.5	**Development of provisions for gas-fuelled ships** (co-ordinated by BLG)	~~2007~~ 2009	MSC 78/26, paragraph 24.19; FP 51/19, section 7
H.6	**Measures to prevent fires in engine-rooms and cargo pump-rooms**	2009	MSC 79/23, paragraph 20.11; FP 51/19, section 8

Notes: 1 "H" means a high priority item and "L" means a low priority item. However, within the high and low priority groups, items have not been listed in any order of priority.
2 Struck-out text indicates proposed deletions and the shaded text shows proposed additions or changes.
3 Items printed in bold letters have been selected for the provisional agenda for FP 52.

		Target completion date/number of sessions needed for completion	Reference
H.7	**Fire resistance of ventilation ducts**	~~2007~~ 2009	MSC 81/25, paragraph 23.13; FP 51/19, section 11
H.8	**Application of requirements for dangerous goods in package form in SOLAS and the 2000 HSC Code** (in co-operation with DSC)	~~2007~~ 2008	MSC 81/25, paragraph 23.14; FP 51/19, section 12
H.9	**Unified interpretation on the number and arrangement of portable extinguishers ~~in accommodation spaces, service spaces, control stations, etc.~~**	2008	MSC 81/25, paragraphs 23.15 and 23.16; FP 51/19, section 13
H.10	**Review of fire safety of external areas on passenger ships**	~~2007~~ 2009	MSC 81/25, paragraph 23.17.1; FP 51/19, section 14
~~H.11~~	~~**Performance standards for fixed water-spraying, fire detection and fire alarm systems for cabin balconies**~~	~~2008~~	~~MSC 81/25, paragraph 23.17.2~~
~~H.12~~ H.11	**Fixed hydrocarbon gas detection systems on double-hull oil tankers** (in co-operation with BLG as necessary and when requested by FP)	~~2 sessions~~ 2009	MSC 82/24, paragraph 21.18; FP 51/19, paragraph 10.10
~~H.13~~ H.12	**Clarification of SOLAS chapter II-2 requirements regarding interrelation between central control station and safety centre**	~~2 sessions~~ 2009	MSC 82/24, paragraph 21.20
[H.13	Harmonization of the requirements for the location of entrances, air inlets and openings in the superstructures of tankers	2 sessions	FP 51/19, paragraph 9.9]
[H.14	Amendments to SOLAS chapter II-2 related to the releasing controls and means of escape for spaces protected by fixed CO_2 systems	2 sessions	FP 51/19, paragraph 3.20]
L.1	Smoke control and ventilation	2 sessions	FP 39/19, section 9; FP 46/16, section 4

DRAFT PROVISIONAL AGENDA FOR FP 52*

Opening of the session

1 Adoption of the agenda

2 Decisions of other IMO bodies

3 Performance testing and approval standards for fire safety systems

4 Comprehensive review of the Fire Test Procedures Code

5 Review of fire safety of external areas on passenger ships

6 Measures to prevent fires in engine-rooms and cargo pump-rooms

7 Fire resistance of ventilation ducts

8 Review of the SPS Code

9 Application of requirements for dangerous goods in package form in SOLAS and the 2000 HSC Code

10 Unified interpretation on the number and arrangement of portable extinguishers

11 Development of provisions for gas-fuelled ships

12 Consideration of IACS unified interpretations

13 Fixed hydrocarbon gas detection systems on double-hull oil tankers

14 Clarification of SOLAS chapter II-2 requirements regarding interrelation between central control station and safety centre

15 Analysis of fire casualty records

16 Work programme and agenda for FP 53

17 Election of Chairman and Vice-Chairman for 2009

18 Any other business

19 Report to the Maritime Safety Committee

---

* Agenda item numbers do not necessarily indicate priority.