INTERNATIONAL MARITIME ORGANIZATION

IMO

E

SUB-COMMITTEE ON FIRE PROTECTION
48th session
Agenda item 19

FP 48/19
3 February 2004
Original: ENGLISH

REPORT TO THE MARITIME SAFETY COMMITTEE

Summary of decisions

Table of contents

Section		Page
1	GENERAL	3
2	DECISIONS OF OTHER IMO BODIES	5
3	UNIFIED INTERPRETATIONS OF SOLAS CHAPTER II-2, THE FSS CODE AND RELATED FIRE TEST PROCEDURES	6
4	LARGE PASSENGER SHIP SAFETY	7
5	PERFORMANCE TESTING AND APPROVAL STANDARDS FOR FIRE SAFETY SYSTEMS	9
6	REVISION OF THE FISHING VESSEL SAFETY CODE AND VOLUNTARY GUIDELINES	11
7	REVISION OF THE GAS CONCENTRATION LIMIT ON SULPHUR DIOXIDE FOR FLOOR COVERINGS	12
8	REVIEW OF THE OSV GUIDELINES	12
9	USE OF DIRECTIONAL SOUND FOR PASSENGER EVACUATION	13
10	REVIEW OF THE 2000 HSC CODE AND AMENDMENTS TO THE DSC CODE AND THE 1994 HSC CODE	13
11	CONSIDERATION OF IACS UNIFIED INTERPRETATIONS	14
12	RECOMMENDATION ON EVACUATION ANALYSIS FOR NEW AND EXISTING PASSENGER SHIPS	15
13	ANALYSIS OF FIRE CASUALTY RECORDS	15

For reasons of economy, this document is printed in a limited number. Delegates are kindly asked to bring their copies to meetings and not to request additional copies.

14	AMENDMENTS TO RESOLUTION A.754(18) RELATING TO PERFORMANCE CRITERIA FOR FIRE DOORS	16
15	AMENDMENTS TO THE PROCEDURE FOR THE PREPARATION OF SPECIMENS OF SEALANTS AND MASTICS (RESOLUTION A.653(16))	16
16	WORK PROGRAMME AND AGENDA FOR FP 49	16
17	ELECTION OF CHAIRMAN AND VICE-CHAIRMAN FOR 2005	17
18	ANY OTHER BUSINESS	17
19	ACTION REQUESTED OF THE COMMITTEE	18

LIST OF ANNEXES

ANNEX 1	DRAFT MSC CIRCULAR ON UNIFIED INTERPRETATIONS OF SOLAS CHAPTER II-2, THE FSS CODE, THE FTP CODE, AND RELATED FIRE TEST PROCEDURES
ANNEX 2	DEFINITION FOR “SAFE HAVEN” AND WORK TO BE CARRIED OUT
ANNEX 3	ANALYSIS OF TASKS ASSIGNED TO THE SUB-COMMITTEE FOR LARGE PASSENGER SHIP SAFETY
ANNEX 4	RELEVANT PARTS OF THE DRAFT REVISED FISHING VESSEL SAFETY CODE PREPARED BY THE SUB-COMMITTEE
ANNEX 5	RELEVANT PARTS OF THE DRAFT REVISED FISHING VESSEL VOLUNTARY GUIDELINES PREPARED BY THE SUB-COMMITTEE
ANNEX 6	DRAFT MSC RESOLUTION ON ADOPTION OF AMENDMENTS TO THE INTERNATIONAL CODE FOR APPLICATION OF FIRE TEST PROCEDURES
ANNEX 7	DRAFT REVISED FIRE CASUALTY RECORD
ANNEX 8	PROPOSED TERMS OF REFERENCE FOR THE SUB-COMMITTEE ON FIRE PROTECTION
ANNEX 9	PROPOSED REVISED WORK PROGRAMME OF THE SUB-COMMITTEE AND PROVISIONAL AGENDA FOR FP 49

1 GENERAL

1.1 The Sub-Committee held its forty-eighth session from 12 to 16 January 2004 under the chairmanship of Mr. J.C. Cubisino (Argentina). The Vice-Chairman, Mr. C. Abbate (Italy), was also present.

1.2 The session was attended by delegations from the following Member Governments:

ARGENTINA
AUSTRALIA
BANGLADESH
BRAZIL
CANADA
CHILE
CHINA
CROATIA
CUBA
CYPRUS
DEMOCRATIC PEOPLE'S REPUBLIC OF KOREA
DEMOCRATIC PEOPLE'S REPUBLIC OF THE CONGO
DENMARK
ECUADOR
EGYPT
FINLAND
FRANCE
GERMANY
GREECE
INDONESIA
IRAN (ISLAMIC REPUBLIC OF)
IRELAND
ITALY
JAPAN
LIBERIA
MALTA
MARSHALL ISLANDS
MEXICO
MOROCCO
NETHERLANDS
NIGERIA
NORWAY
PANAMA
PERU
PHILIPPINES
POLAND
PORTUGAL
REPUBLIC OF KOREA
ROMANIA
RUSSIAN FEDERATION
SAUDI ARABIA
SINGAPORE
SPAIN
SWEDEN
TURKEY
UNITED KINGDOM
UNITED STATES
VENEZUELA

the following Associate Member of IMO:

HONG KONG, CHINA

1.3 The session was also attended by representatives from the following United Nations specialized agency:

FOOD AND AGRICULTURE ORGANIZATION OF THE UNITED NATIONS (FAO)

1.4 The session was also attended by observers from the following non-governmental organizations:

INTERNATIONAL CHAMBER OF SHIPPING (ICS)
INTERNATIONAL ORGANIZATION FOR STANDARDIZATION (ISO)
INTERNATIONAL CONFEDERATION OF FREE TRADE UNIONS (ICFTU)
INTERNATIONAL RADIO MARITIME COMMITTEE (CIRM)

BIMCO
INTERNATIONAL ASSOCIATION OF CLASSIFICATION SOCIETIES (IACS)
INTERNATIONAL FEDERATION OF SHIPMASTERS' ASSOCIATIONS (IFSMA)
INTERNATIONAL ASSOCIATION OF INDEPENDENT TANKER OWNERS (INTERTANKO)
INTERNATIONAL GROUP OF P & I ASSOCIATES (P & I CLUBS)
INTERNATIONAL COUNCIL OF CRUISE LINES (ICCL)
THE INSTITUTE OF MARINE ENGINEERING, SCIENCE AND TECHNOLOGY (IMarEST)
THE INTERNATIONAL MARINE CONTRACTORS ASSOCIATION (IMCA)
THE ROYAL INSTITUTION OF NAVAL ARCHITECTS (RINA)

Opening address of the Secretary-General

1.5 In welcoming the participants, the Secretary-General wished delegates and the maritime community at large, a happy, healthy and successful, accident-free new year and reiterated his plea, made to the Council and Assembly in 2003, that all those with an interest in the affairs of IMO and the shipping industry should join forces so that a safer, more secure and environmentally friendly maritime world can be created.

Referring to the approval by MSC 77 of the Guidelines for partially weathertight hatchway covers on board containerships and the draft Assembly resolution on Graphical symbols for shipboard fire control plans, which was subsequently adopted by the Assembly in December 2003, the Secretary-General considered this as an important achievement in IMO's continuous endeavours to provide up-to-date for both passenger and cargo ships, while noting that the aforementioned guidelines would provide useful advice to shipowners, operators and designers.

Recalling that the Sub-Committee had also been requested by the MSC to consider matters on large passenger ship safety, he emphasized how important it was for IMO to give its fullest attention and care to progressing the safety of large passenger ships and that he had no doubt that the Sub-Committee's contribution to the MSC's work would undoubtedly be of utmost importance. The Secretary-General encouraged the Sub-Committee to forward to the Committee any comments and proposals which may need detailed consideration so that IMO could take pride in the knowledge that it had also contributed to the overall design, construction and equipment of beautiful passenger ships such as the **Queen Mary 2**, which has had an impressive positive impact on the image of shipping as a whole.

Referring to the revision of the fishing vessel Safety Code and Voluntary Guidelines, the Secretary-General recalled the efforts already made by the Organization to establish adequate safety standards for fishing vessels, which culminated in the adoption of the 1993 Torremolinos Protocol for the Safety of Fishing Vessels, and expressed his confidence that the Sub-Committee would bring its work on this matter to a conclusion and, in this context, expressed his sincere appreciation to the Food and Agriculture Organization for their contributions. In concluding on this issue, the Secretary-General observed that, no matter how important these developments are, the fact remains that neither the Torremolinos Protocol nor the STCW-F Convention had yet come into force and that he was extremely concerned about the reported annual loss of some 24,000 fishermen. To this end, he stated that the Secretariat would intensify its efforts in this respect and that the emphasis placed on this issue in the restructuring of the Maritime Safety Division was a step in that direction.

The Secretary-General recalled the hectic work undertaken expeditiously by the Organization to build an adequate maritime security infrastructure so that Governments and the industry, both rising to the challenges of acting appropriately to protect shipping against international terrorism, have enough guidance to do so, and urged all parties concerned, be it Administrations, designated authorities, port authorities, companies, recognized security organizations, training institutions or others, to intensify their efforts to meet the entry-into-force deadline for the new security regime specified in SOLAS chapter XI-2 and the International Ship and Port Facility Security Code. He also urged all parties concerned, in particular SOLAS Contracting Governments, to implement, as far as ships flying their flag are concerned, the new measures as early as possible.

Adoption of the agenda

1.6 The Sub-Committee adopted the agenda (FP 48/1) and noted a list of documents (FP 48/INF.6) considered under each agenda item. The Sub-Committee agreed, in general, to be guided in its work by the annotations contained in document FP 48/1/1.

2 DECISIONS OF OTHER IMO BODIES

2.1 The Sub-Committee noted the decisions and comments pertaining to its work made by STW 34, DE 46, BLG 8, FSI 11, MSC 77, C 90, NAV 49, MEPC 49, SLF 46, DSC 8, C/ES.22 and A 23, as reported in documents FP 48/2, FP 48/2/1 and FP 48/2/2, and took them into account in its deliberations when dealing with relevant agenda items.

2.2 As reported in paragraph 3 of document FP 48/2/2, the Sub-Committee noted that the Council, at its twenty-second extraordinary session, in considering the outcomes of SLF 46 and DSC 8 with regard to the trial reporting system, had:

.1 noted that, under the provisional arrangements, the issue of the availability of working groups' reports in all working languages for consideration on the penultimate day of the session was not fully resolved, especially if the reports in question were voluminous;

.2 agreed that the trial period of the provisional system be extended to cover all the sub-committees which will meet between now and the next sessions of the MSC and the MEPC;

.3 invited the MSC and the MEPC to consider the conclusions and recommendations of the reporting sub-committees and to draw their own recommendations, which they should submit to C 93 for consideration and action, as appropriate;

.4 agreed that all the working papers approved by the sub-committees in plenary should be posted on the IMO website; and

.5 agreed that, until further notice, sub-committees should produce an approved final summary of decisions to enable the Committee(s) to take action as may be requested at the first opportunity after a sub-committee's session (as done by SLF 46 and DSC 8).

2.3 The Sub-Committee noted that MSC 77 had decided that, in the future, sub-committees should avoid developing unified interpretations for guidelines. In cases where the existing text of the guidelines is vague and needs modifications, the sub-committee concerned should amend the guidelines accordingly in lieu of developing unified interpretations.

3 UNIFIED INTERPRETATIONS OF SOLAS CHAPTER II-2, THE FSS CODE AND RELATED FIRE TEST PROCEDURES

General

3.1 The Sub-Committee had for its consideration under this agenda item documents submitted by Italy, the co-ordinator of the correspondence group (FP 48/3), the Republic of Korea (FP 48/3/1 and FP 48/3/2), the United States (FP 48/3/3 and FP 48/3/4) and IACS (FP 48/3/5).

3.2 In considering paragraph 8 of document FP 48/3, the Sub-Committee agreed that the group's recommendation to amend SOLAS chapter II-2 and relevant codes with a view to ensuring that all alarms are based on the Code on Alarms and Indicators, was outside the scope of this work programme item and invited interested Members to submit proposals to the MSC in accordance with the Guidelines on the organization and method of work.

Establishment of the working group

3.3 Following discussion of the above documents, the Sub-Committee established the Working Group on Unified Interpretations of SOLAS Chapter II-2, the FSS Code and Related Fire Test Procedures and instructed it, taking into account the comments and decisions made in plenary, to:

.1 further consider the draft unified interpretations contained in the report of the correspondence group (FP 48/3) and documents FP 48/3/1, FP 48/3/2, FP 48/3/3, FP 48/3/4, FP 48/3/5 and MSC 77/25/5, and prepare a text of the draft unified interpretations;

.2 review the fire protection-related IACS unified interpretations, as contained in the report of the correspondence group (FP 48/3), and make recommendations as appropriate (see also paragraphs 11.1 and 11.2);

.3 consider matters related to the development of performance test standards for large fire doors;

.4 consider matters related to the draft concentration limits of sulphur dioxide emissions from floor coverings, taking into account document FP 48/7, and make recommendations as appropriate (see also paragraphs 7.1 and 7.2); and

.5 consider whether it is necessary to establish a correspondence group and, if so, prepare the terms of reference for consideration by the Sub-Committee.

Report of the working group

3.4 Having received the report of the working group (FP 48/WP.6/Rev.1), the Sub-Committee approved it in general and, in particular (with reference to paragraphs of, and annexes to, document FP 48/WP.6):

.1 agreed to the unified interpretations to SOLAS chapter II-2, the FSS Code, the FTP Code and related fire test procedures and associated draft MSC circular, set out in annex 1, for submission to MSC 78 for approval (paragraphs 5 to 22 and annex 2);

.2 noted the group's recommendation that the aforementioned circular on unified interpretations should be updated regularly (paragraph 21); and

.3 noted the group's view that the proposals related to enlarged fire doors was a new work item and invited Members to submit appropriate proposals with supporting documentation to the Committee in accordance with the Guidelines on the organization and method of work (MSC/Circ.1099) (paragraphs 23 to 25).

3.5 In debating the interpretation of SOLAS regulation II-2/10.7.2 concerning ships carrying dangerous goods on deck only, the delegation of Japan reserved its position, believing that the risk of fire in the hold would be minimal when only non-combustible cargoes with a low fire risk are carried in the hold, irrespective of whether dangerous goods are carried on deck or not. They, therefore, did not consider it necessary to require a fixed fire-extinguishing system in the hold in such a case, and some delegates supported this view. However, the majority of the Sub-Committee agreed that the interpretation should go forward to the Committee for approval.

3.6 In respect of document FP 48/3/2 (Republic of Korea), proposing to develop guidelines on insulation of high temperature surfaces, the Sub-Committee was of the opinion that the guidelines were very useful, but did not fall within the scope of a unified interpretation. The Sub-Committee therefore invited the Republic of Korea to submit a proposal for a new work programme item to the Committee, in accordance with the Guidelines on the organization and method of work (MSC/Circ.1099).

3.7 With regard to the use of ISO standards, the Sub-Committee noted that a number of ISO standards had been included in the unified interpretations previously approved by the MSC, bearing in mind that the ISO standards can be used as guidance in applying the relevant provisions of the 1974 SOLAS Convention and the FTP and FSS Codes, provided they do not conflict with the provisions of these instruments.

4 LARGE PASSENGER SHIP SAFETY

General

4.1 The Sub-Committee had for its consideration under this agenda item documents submitted by Germany, the co-ordinator of the correspondence group (FP 48/4), Germany (FP 48/4/1) and ICCL (MSC 77/4/1).

4.2 In considering the above documents, the Sub-Committee agreed to:

.1 discuss, under this agenda item, matters related to the application of the Interim Guidelines for evacuation analyses for new and existing passenger ships (MSC/Circ.1033) only as they relate to large passenger ships and to discuss all other matters related to the aforementioned Interim Guidelines under agenda item 12; and

.2 discuss matters related to the development of performance tests for large fire doors under agenda item 3 (see paragraph 3.4.3).

Establishment of the working group

4.3 Having briefly discussed the above documents, the Sub-Committee established the Working Group on Large Passenger Ship Safety and instructed it, taking into account the comments and decisions made in plenary, to:

.1 as a high priority, further consider what constitutes a "safe haven", taking into account the report of the correspondence group (FP 48/4), and prepare appropriate functional requirements and fire scenarios, bearing in mind that the other tasks assigned on this matter may be effected;

.2 further consider the report of the correspondence group (FP 48/4), taking into account documents FP 47/WP.10 and Corr.1, FP 48/4/1 and MSC 77/4/1, with a view to identifying which tasks will require further action by the Sub-Committee and which tasks need no further action and provide appropriate explanatory text and target completion dates for the tasks requiring further consideration;

.3 further consider issues related to the development of the performance-based standards for evacuation systems, taking into consideration document FP 48/4 and make recommendations as appropriate; and

.4 consider whether there is a need for a correspondence group and, if so, prepare the terms of reference for consideration by the Sub-Committee.

Report of the working group

4.4 Having received the report of the working group (FP 48/WP.7/Rev.1), the Sub-Committee approved it in general and, in particular (with reference to paragraphs and annexes in document FP 48/WP.7/Rev.1):

.1 noted the discussion of the group regarding the "safe haven" concept and, in particular, the related assumptions and considerations to be taken into account when developing functional requirements, fire scenarios and performance standard (paragraphs 4 to 9 and 26 to 30, and annexes 1 and 2);

.2 agreed to the proposed definition of the "safe haven", set out in annex 2 (paragraph 10 and annex 2);

.3 agreed to develop functional requirements, fire scenarios and performance standards based on the definition of "safe haven" taking into account guiding principles set out in annex 2. (paragraph 10 and annex 2);

.4 agreed with the analysis of tasks assigned to the Sub-Committee for large passenger ships (paragraphs 11 to 14 and 22 and annexes 3 and 4);

.5 noted the recommendation of the group concerning the review of requirements for shops and the list of tasks not specific to large passenger ships (paragraphs 15, 16 and 22 and annex 4).

.6 noted the recommendation of the majority of the group concerning the use of evacuation analysis in the design process and simplification of escape route arrangements (paragraph 17).

.7 concurred with the recommendation of the group concerning crowd management issues, including the proposed review of relevant IMO model courses; and agreed to invite the STW Sub-Committee to consider reviewing the IMO model courses on the basis of the safe haven concept, as appropriate (paragraphs 18 to 21); and

.8 agreed to re-establish the Correspondence Group on Large Passenger Ship Safety under the co-ordination of Germany*, with the following terms of reference (paragraph 31):

.1 to develop functional requirements, performance standards and fire scenarios for the application of the "safe haven" concept taking into account the information contained in annexes 1, 2 and 3 to document FP 48/WP.7/Rev.1;

.2 to finalize draft performance-based standard for evacuation guidance systems, taking into account the information contained in documents FP 48/4, annex 4 and FP 47/16, paragraphs 11.5 and 11.6, and FP 48/WP.7/Rev.1, paragraph 25; and

.3 to submit a report to FP 49.

5 PERFORMANCE TESTING AND APPROVAL STANDARDS FOR FIRE SAFETY SYSTEMS

General

5.1 The Sub-Committee had for its consideration under this agenda item documents submitted by Denmark (FP 48/5/4 and MSC 77/11/2), Germany (FP 48/INF.3), Japan (FP 48/5/6), the Republic of Korea (FP 48/5/1, FP 48/5/2 and FP 48/5/5), Sweden (FP 48/5/3 and MSC 77/11/2) and the United States, the co-ordinator of the correspondence group (FP 48/5).

5.2 In considering matters related to the interpretation of paragraph 3.22 of resolution A.800(19), the Sub-Committee agreed to the recommendation of the correspondence group to postpone consideration of this issue until the technical data from International Water Mist Association's (IWMA) test programme is available, after having noted that the IWMA test programme would be completed by the end of 2004 (FP 48/INF.3). In this regard, the delegation of Germany kindly offered to inform the IWMA of the above decision and to submit the results of the IWMA test programme to the Sub-Committee, once available, for consideration with a view to finalizing the aforementioned interpretation of paragraph 3.22.

---

* Co-ordinator: Mr. Andreas Ullrich
Dipl.-Ing. Schiffbau
Naval Architect
NSF-Ship Safety Department
Germanischer Lloyd
Vorsetzen 35
D-20459 Hamburg
Germany
Tel: 49 40 36149 454
Fax: 49 40 36149 1738
E-mail: ull@gl-group.com

Establishment of the working group

5.3 Having discussed the above documents, the Sub-Committee established the Working Group on Performance Testing and Approval Standards for Fire Safety Systems and instructed it, taking into account the comments and decisions in plenary, to:

.1 as a high priority, further consider matters related to the fire test standards for machinery space water based fire-extinguishing systems, taking into account documents FP 48/5, FP 48/5/1, FP 48/5/2, FP 48/5/3 and FP 48/5/5, and make recommendations as appropriate;

.2 further consider the report of the correspondence group (FP 48/5) and document FP 48/5/4, taking into account the priorities specified in annex 2 of document FP 47/WP.9, with a view to making appropriate recommendations; and

.3 consider whether there is the need for a correspondence group and, if so, prepare the terms of reference for consideration by the Sub-Committee.

Report of the working group

5.4 Having received the report of the working group (FP 48/WP.4), the Sub-Committee approved it in general and took action as indicated in the following paragraphs (with references to paragraphs and annexes of document FP 48/WP.4/Rev.1):

. 1 agreed in principle to the proposed amendments to the annexes of MSC/Circ.668/728, MSC/Circ.913 and MSC/Circ.848 (paragraphs 6, 9 and 14 and annexes 1, 2 and 3); and

.2 invited Members to submit their views on prohibiting carbon dioxide systems in occupied spaces to FP 49 (paragraph 13.9).

5.5 The Sub-Committee agreed to establish a correspondence group under the co-ordination of the United States*, and instructed it, taking into account all relevant information contained in documents FP 47/8/1, FP 47/8/3, FP 47/8/4, FP 47/8/8, FP 48/5, FP 48/5/3 and FP 48/5/4 and the outcome of discussion outlined in document FP 48/WP.4/Rev.1, to:

.1 further discuss the remaining issues reflected in paragraph 1.5 and annex 5 of document FP 48/WP.4/Rev.1, regarding water mist fire-extinguishing systems and prepare draft amendments to annex 1 as appropriate;

.2 prepare relevant amendments for the following short-term priority category of topics relating to machinery space and cargo pump-room fire-extinguishing systems:

---

* Mr. R. Eberly, P.E.
Commandant (G-MSE-4)
United States Coast Guard
2100 Second Street, S.W.
Washington, DC 20593-0001
United States of America
Tel : +1 202 267 1444
Fax : +1 202 267 4816
e-mail : reberly@comdt.uscg.mil

.1 fixed pressure water-spraying systems;

.2 fixed high-expansion foam fire-extinguishing systems;

.3 fixed low-expansion foam fire-extinguishing systems; and

.4 portable foam applicator units;

.3 prepare relevant amendments for water mist fire-extinguishing systems relating to control stations, accommodation and service spaces, taking into account document FP 48/5/4;

.4 prepare relevant amendments for water mist fire-extinguishing systems for vehicle space, ro-ro space and special category space extinguishing systems;

.5 prepare draft guidance on fixed gas fire-extinguishing systems with regard to safety and maintenance and draft relevant technical amendments to the FSS Code using as a basis the proposals contained in documents FP 47/8/8 and FP 47/8/1, respectively; and

.6 submit a report to FP 49.

6 REVISION OF THE FISHING VESSEL SAFETY CODE AND VOLUNTARY GUIDELINES

General

6.1 The Sub-Committee had for its consideration under this agenda item the documents FP 48/6, FP 48/6/1 and FP 48/6/2 submitted by Japan, the co-ordinator of the correspondence group.

6.2 In considering the report of the correspondence group, the Sub-Committee agreed:

.1 that footnotes providing a reference to the FTP and FSS Codes should be added to the draft text of chapters V and 5 of the revised fishing vessel Safety Code and Voluntary Guidelines, respectively, where appropriate;

.2 to change the title of part C of the draft chapter V of the revised fishing vessel Safety Code, as contained in document FP 47/WP.7, to "Part C - Fire safety measures in vessels of 45 m in length and over but less than 60 m";

.3 to the new part D relating to fishing vessels of 24 m in length and over but less than 45 m, as contained in part 3 of the group's report (FP 48/6/2), for inclusion in the draft chapter V of the revised fishing vessel Safety Code;

.4 that provisions in the fishing vessel Safety Code relating to low flame spread and smoke generation should be left to the satisfaction of the Administration until uniform measures are developed by IMO; and

.5 to the fire safety objectives and fundamental requirements, as contained in paragraphs 34.1 and 34.2 of document FP 48/6, for inclusion in part A of the draft chapter V of the revised fishing vessel Safety Code.

Establishment of the drafting group

6.3 Having briefly discussed the above documents, the Sub-Committee established the Drafting Group on Revision of the Fishing Vessel Safety Code and Voluntary Guidelines and instructed it, taking into account the comments made in plenary, to prepare the final texts of the fire protection chapters of the draft revised fishing vessel Safety Code and Voluntary Guidelines, using as a basis documents FP 48/6, FP 48/6/1, FP 48/6/2 and FP 47/WP.7.

Report of the drafting group

6.4 Having received the report of the drafting group (FP 48/WP.2/Rev.1 and FP 48/WP.3/Rev.1), the Sub-Committee approved it in general and took the following actions:

.1 agreed to the draft text of the relevant parts of the draft revised Fishing Vessel Safety Code, as set out in annex 4, for referral to the SLF Sub-Committee and its correspondence group dealing with this issue, for co-ordination purposes; and

.2 invited the SLF Sub-Committee to include in an appropriate annex to the Code references to the Fire Test Procedures Code, the Fire Safety Systems Code and the provisions of the International Standard IEC Publication 60079;

.3 agreed to the draft text of the relevant parts of the draft revised fishing vessel Voluntary Guidelines set out in annex 5, for referral to the SLF Sub-Committee and its correspondence group dealing with this issue, for co-ordination purposes; and

.4 agreed to the revised fire safety objectives and invited the SLF Sub-Committee and its correspondence group to incorporate them into the appropriate sections of Part A of the Safety Code (see paragraph 7 of FP 48/WP.3/Rev.1).

7 REVISION OF THE GAS CONCENTRATION LIMIT ON SULPHUR DIOXIDE FOR FLOOR COVERINGS

7.1 The Sub-Committee considered document FP 48/7 (Japan), containing proposed revisions of the gas concentration limit of sulphur dioxide for floor coverings, taking into account annex 5 to document FP 47/WP.8, and agreed to forward the above document to the Working Group on Unified Interpretations of SOLAS chapter II-2, the FSS Code and related fire test procedures for further consideration and advice as appropriate (see paragraph 3.3).

Report of the working group

7.2 In considering the part of the report of the working group (FP 48/WP.6/Rev.1) referring to the above matter, the Sub-Committee agreed to the draft amendments to the FTP Code relating to the sulphur dioxide (SO_2) gas concentration for floor coverings, as set out in annex 6, for submission to MSC 78 for approval and subsequent adoption.

8 REVIEW OF THE OSV GUIDELINES

8.1 The Sub-Committee considered document FP 48/8 (Australia), containing a proposal on how best to proceed on this matter, and, after having a detailed discussion on the matter, took the following actions:

.1 agreed that the existing text of paragraph 5 of the Guidelines for the design and construction of offshore supply vessels (resolution A.469(XII)) should be replaced with the following:

> "The vessel should comply with the relevant provisions for cargo ships contained in chapter II-2 of the 1974 SOLAS Convention, in force, as determined by the Administration."

.2 agreed to update, at FP 49, the fire protection references in paragraphs 3.9.1 and 3.9.2.4 of the Guidelines for the transport and handling of limited amounts of hazardous and noxious liquid substances in bulk on offshore support vessels (resolution A.673(16)) and amended the title of the aforementioned work programme item accordingly (see also paragraph 16.3); and

.3 instructed the Secretariat to inform DE 47 (co-ordinator) and other sub-committees concerned of the above decisions.

9 USE OF DIRECTIONAL SOUND FOR PASSENGER EVACUATION

General

9.1 The Sub-Committee noted that there were no documents submitted under this agenda item. However, having recalled that FP 47 had agreed that the acceptability of the directional sound system should be evaluated on the basis of performance standards for evacuation guidance systems and having further recalled its decision, under agenda item 4 (Large Passenger Ships Safety) to consider matters related to the development of performance standards for evacuation guidance systems under that agenda item, the Sub-Committee, after a general discussion of relevant parts of document FP 48/4 agreed to refer the matter to the Working Group on Large Passenger Ship Safety established under agenda item 4, for further consideration and advice as appropriate (see paragraphs 4.3.3 and 4.4.8.2).

Report of the working group

9.2 In considering the part of the report of the working group (FP 48/WP.7/Rev.1) referring to the above matter, the Sub-Committee noted that more time was necessary to prepare the draft performance-based standard for evacuation guidance systems and, having further noted that the Correspondence Group on Large Passenger Ship Safety was instructed (see paragraph 4.4.8.2) to finalize the draft standard, agreed to continue consideration of the item at FP 49, taking into account the aforementioned draft standard, and modified the title of this item to reflect the nature of the work to be carried out.

10 REVIEW OF THE 2000 HSC CODE AND AMENDMENTS TO THE DSC CODE AND THE 1994 HSC CODE

10.1 The Sub-Committee considered document FP 48/10 (Australia), containing a proposal on how best to proceed on this matter, and agreed:

.1 that the review of the 2000 HSC Code should include integrating the existing fire protection interpretations contained in MSC/Circ.1102, provisions of the Interim Guidelines for a simplified evacuation analysis of high-speed passenger craft (MSC/Circ.1001) and provisions related to the use of asbestos; and

.2 to establish a working group at FP 49 to deal with this matter in detail.

10.2 In view of the above decisions, the Sub-Committee agreed to establish a correspondence group, under the co-ordination of Australia,* to progress this work intersessionally and instructed it to:

.1 review the fire protection-related provisions of the 2000 HSC Code with a view to updating them, taking into account MSC/Circ.1001, MSC/Circ.1102 and prepare a draft text of amendments;

.2 consider the experience gained with the implementation of the Interim Guidelines for a simplified evacuation analysis of high-speed passenger craft (MSC/Circ.1001) in relation to the above review and make recommendations as appropriate;

.3 consider matters related to use of asbestos and make recommendations as appropriate;

.4 review the DSC Code and the 1994 HSC Code with a view to aligning their requirements with those of the 1974 SOLAS Convention and the 2000 HSC Code; and

.5 submit a report to FP 49.

10.3 The Secretariat was instructed to inform DE 47 (co-ordinator) and other sub-committees concerned of the above decisions.

11 CONSIDERATION OF IACS UNIFIED INTERPRETATIONS

General

11.1 The Sub-Committee had document FP 48/3 (Italy) for its consideration and decided to forward the relevant parts of the above document to the Working Group on Unified Interpretations of SOLAS Chapter II-2, the FSS Code and Related Fire Test Procedures, established under agenda item 3, for further consideration (see paragraph 3.3.2).

Report of the working group

11.2 In considering the part of the report of the working group (FP 48/WP.6/Rev.1) referring to the above matter, the Sub-Committee noted that the fire protection-related IACS unified interpretations had been incorporated in the draft MSC circular on Unified interpretations to SOLAS chapter II-2, the FSS Code, the FTP Code and related fire test procedures, prepared for submission to MSC 78 for approval (see paragraph 3.4.1 and annex 1).

---

* Co-ordinator:
Mr. Rob Gehling
Principal Adviser
Australian Maritime Safety Authority
25 Constitution Ave
GPO Box 2181
Canberra ACT 2601
Australia
Telephone: 61 (0) 2 6279 5696
Facsimile: 61 (0) 2 6279 5966
E-mail: rcg@amsa.gov.au

12 RECOMMENDATION ON EVACUATION ANALYSIS FOR NEW AND EXISTING PASSENGER SHIPS

12.1 The Sub-Committee considered document FP 48/INF.2 (Canada) and noted with appreciation the information provided on the experience gained with two passenger vessels with regard to the application of the simplified and advanced methods specified in the Interim Guidelines on evacuation analysis for new and existing passenger ships (MSC/Circ.1033).

12.2 The Sub-Committee also considered documents FP 48/4 and FP 48/4/1 (Germany), containing comments and proposed revisions on the Interim Guidelines, and agreed not to revise the aforementioned guidelines until more experience is gained in their application. To this end, Members and international organizations were invited to submit, to FP 49, any information that may be relevant for the necessary future upgrading of the present Interim Guidelines.

13 ANALYSIS OF FIRE CASUALTY RECORDS

Revision of the fire casualty record

13.1 The Sub-Committee considered document FP 48/13 (Secretariat), containing the draft revised fire casualty record (annex 6 of MSC/Circ.953-MEPC/Circ.372), which was prepared by the Secretariat, as instructed at FP 47, taking into account the modifications proposed by FP 47 and FSI 11 (documents FP 47/WP.4 and FSI 11/WP.2).

Establishment of the drafting group

13.2 Recognizing the necessity to make progress on the above issue and recalling its relevant decision at FP 47, the Sub-Committee established the Drafting Group on Analysis of Fire Casualty Records and instructed it, taking into account the decisions made in plenary, to finalize the aforementioned draft fire casualty record for consideration by the Sub-Committee.

Report of the drafting group

13.3 Having received the report of the drafting group (FP 48/WP.5/Rev.1), the Sub-Committee approved it in general and, in particular (with reference to paragraphs in document FP 48/WP.5/Rev.1):

.1 noted the group's view regarding inconsistencies with the format and terminology throughout MSC/Circ.953-MEPC/Circ.372 (paragraphs 4 and 5);

.2 agreed to the draft revised fire casualty record, as set out in annex 7, for referral to the FSI Sub-Committee for further action as appropriate (paragraph 7); and

.3 instructed the Secretariat to convey the report of the group to the FSI Sub-Committee to take it into account in a future review of the circular.

Related matters

13.4 In the context of this item, the Sub-Committee noted that MSC 77, in considering the proposal by STW 34 to delete the item on "Casualty analysis" from the work programme and to deal with the matter under the agenda item on "Any other business", had agreed to consider the aforementioned proposal at MSC 78 with regard to the sub-committees which have such an item on their work programme.

14 AMENDMENTS TO RESOLUTION A.754(18) RELATING TO PERFORMANCE CRITERIA FOR FIRE DOORS

14.1 The Sub-Committee considered document FP 48/14 (France), proposing to revise resolution A.754(18) to allow for the testing of performance criteria at the threshold of ship doors without reducing the level of safety, and, following a detailed discussion of the issues, agreed to further consider this matter at the next session.

14.2 Members and international organizations were invited to submit comments and proposals to FP 49.

15 AMENDMENTS TO THE PROCEDURE FOR THE PREPARATION OF SPECIMENS OF SEALANTS AND MASTICS (RESOLUTION A.653(16))

15.1 The Sub-Committee considered document FP 48/15 (France), proposing to develop amendments to the procedure for preparing specimens of sealants and mastics for surface flammability testing specified in resolution A.653(16), and, following a detailed discussion of the issues, agreed to further consider this matter at the next session.

15.2 Members and international organizations were invited to submit comments and proposals to FP 49.

16 WORK PROGRAMME AND AGENDA FOR FP 49

Terms of reference for the Sub-Committee

16.1 As instructed by MSC 76, the Sub-Committee considered its terms of reference (FP 47/2/2, annex 2), taking into account the annex to document FP 47/WP.1 (Chairman), and agreed to the draft revised terms of reference, set out in annex 8, for submission to MSC 78 and MEPC 52 for consideration and action as appropriate.

16.2 The Sub-Committee debated, as requested by MSC 77, the view with respect to the proposal to consolidate, under one sub-committee, the responsibility for escape, evacuation and recovery and, having agreed that all matters related to on-board escape and evacuation covered under SOLAS chapter II-2 should remain within the Sub-Committee's purview, invited the Committee to note this opinion. The Secretariat was instructed to inform COMSAR 9 and DE 47 accordingly.

Work programme and agenda for FP 49

16.3 Taking into account the progress made at this session and the provisions of the agenda management procedure contained in paragraphs 3.11 to 3.23 of the Guidelines on the organization and method of work (MSC/Circ.1099 – MEPC/Circ.405), the Sub-Committee revised its work programme (FP 48/WP.1/Rev.1, annex 1), based on that approved by MSC 77 (FP 48/2, annex), and invited the Committee to approve the proposed revised work programme and provisional agenda for FP 49, set out in annex 9.

Arrangements for the next session

16.4 The Sub-Committee agreed to establish, at its next session, working groups on the following subjects:

.1 large passenger ship safety;

.2 performance testing and approval standards for fire safety systems; and

.3 review of the 2000 HSC Code and amendments to the DSC Code and the 1994 HSC Code,

and a drafting group on amendments to resolutions A.653(16) and A.754(18).

16.5 The Sub-Committee noted that its forty-ninth session had been tentatively scheduled to take place from 24 to 28 January 2005.

17 ELECTION OF CHAIRMAN AND VICE-CHAIRMAN FOR 2005

17.1 In accordance with the Rules of Procedure of the Maritime Safety Committee, the Sub-Committee unanimously re-elected Mr. J.C. Cubisino (Argentina) as Chairman and Mr. C. Abbate (Italy) as Vice-Chairman, for 2005.

18 ANY OTHER BUSINESS

Basic elements of a shipboard occupational health and safety programme

18.1 The Sub-Committee considered documents FP 48/18 (Secretariat) and BLG 8/WP.4; containing draft Guidelines on the basic elements of a shipboard occupational health and safety programme prepared by BLG 8, and agreed that no modifications to the draft Guidelines were necessary from the fire protection point of view.

18.2 The Secretariat was instructed to inform BLG 9 accordingly.

Test laboratories recognized by the Administrations

18.3 The Sub-Committee noted with appreciation the submission by the United Kingdom (FP 48/INF.4) providing the latest information on test laboratories approved by the Administration.

18.4 In this context, the Sub-Committee noted the information provided by the Secretariat that the latest annual FP circular on test laboratories recognized by the Administrations had been published as FP/Circ.26.

Update on ISO activities related to fire protection

18.5 The Sub-Committee noted with appreciation the document submitted by ISO (FP 48/INF.5) providing information on the latest TC 8 activities for matters on shipboard safety-related signage.

Halon banking and reception facilities

18.6 The Sub-Committee noted information provided by the Secretariat that the latest annual FP circular on halon banking and reception facilities had been published as FP/Circ.27.

19 ACTION REQUESTED OF THE COMMITTEE

19.1 The Maritime Safety Committee is invited to:

.1 approve the draft MSC circular on Unified interpretations of the revised SOLAS chapter II-2, the FSS Code, the FTP Code and related fire test procedures (paragraph 3.4.1 and annex 1);

.2 consider the definition of the "safe haven" with respect to large passenger ships and take action as appropriate (paragraph 4.4.2 and annex 2);

.3 endorse the Sub-Committee's decision to develop functional requirements, fire scenarios and performance standards with respect to the work on large passenger ship safety, taking into account the definition for "safe haven" (paragraph 4.4.3 and annex 2);

.4 endorse the Sub-Committee's decision regarding the work to be undertaken on matters related to large passenger ship safety (paragraph 4.4.4 and annex 3);

.5 note that the STW Sub-Committee was invited to consider reviewing the relevant IMO model courses for crowd management issues on the basis of the "safe haven" concept, as appropriate (paragraph 4.4.7);

.6 note that the Sub-Committee has completed the relevant chapters of the draft revised fishing vessel Safety Code and Voluntary Guidelines and forwarded them to the SLF Sub-Committee for co-ordination purposes (paragraphs 6.4.1 to 6.4.4 and annexes 4 and 5);

.7 note that the SLF Sub-Committee was invited to include in an appropriate annex to the Fishing Vessel Safety Code references to the Fire Test Procedures Code, the Fire Safety Systems Code and the provisions of the International Standard IEC Publication 60079 (paragraph 6.4.2);

.8 approve the draft amendment to the FTP Code relating to the sulphur dioxide (SO_2) gas concentration for floor coverings, with a view to adoption (paragraph 7.2 and annex 6);

.9 note that the review of the relevant provisions of the OSV Guidelines has been completed and forwarded to the DE Sub-Committee for co-ordination purposes (paragraph 8.1.1);

.10 enclose the Sub-Committee's decision to update the fire protection references in paragraphs 3.9.1 and 3.9.2.4 of the Guidelines for the transport and handling of limited amounts of hazardous and noxious liquid substances in bulk on offshore support vessels (resolution A.673(16)) and agree to the amended title of the work programme item on "Review of the OSV Guidelines" (paragraph 8.1.2 and annex 9);

.11 note that consideration of the IACS unified interpretations has been completed (paragraph 11.2 and annex 1);

.12 note that the Sub-Committee finalized the draft revised fire casualty record and forwarded it to the FSI Sub-Committee for co-ordination purposes (paragraph 13.3.2 and annex 7);

.13 consider the draft terms of reference for the Sub-Committee and take action as appropriate (paragraph 16.1 and annex 8);

.14 note the Sub-Committee's view that the responsibility for on-board escape and evacuation related provisions covered under SOLAS chapter II-2 should remain within the purview of the Sub-Committee and take this view into account when considering the relevant opinions of COMSAR 9 and DE 47 on the matter (paragraph 16.2);

.15 approve the draft revised work programme of the Sub-Committee and the draft provisional agenda for FP 49 (paragraph 16.3 and annex 9); and

.16 approve the report in general.

***

ANNEX 1

DRAFT MSC CIRCULAR

UNIFIED INTERPRETATIONS OF SOLAS CHAPTER II-2, THE FSS CODE, THE FTP CODE AND RELATED FIRE TEST PROCEDURES

1 The Maritime Safety Committee, at its [seventy-eighth session (12 to 21 May 2004)], with a view to providing more specific guidance for vague expressions such as "to the discretion of the Administration", which are open to different interpretations contained in IMO instruments, approved the unified interpretations of SOLAS chapter II-2, the FSS Code, the FTP Code and related fire test procedures prepared by the Sub-Committee on Fire Protection, as set out in the annex.

2 Member Governments are invited to use the annexed unified interpretations as guidance when applying relevant provisions of SOLAS chapter II-2, the FSS Code, the FTP Code and related fire test procedures to fire protection construction, installation, arrangements and equipment to be installed on board ships on or after [*date of approval of the circular*] and to bring the unified interpretations to the attention of all parties concerned.

ANNEX

UNIFIED INTERPRETATIONS OF SOLAS CHAPTER II-2, THE FSS CODE, THE FTP CODE AND RELATED FIRE TEST PROCEDURES

INTERPRETATIONS OF VAGUE EXPRESSIONS AND OTHER VAGUE WORDING WITH REFERENCES TO SOLAS CHAPTER II-2, AS AMENDED BY RESOLUTION MSC.99(73)

SOLAS chapter II-2		Interpretation or reference
Part	**Regulation**	**Application**
A	1.2.2.2	**Interpretation of the term "first survey"** For passenger ships, the term "first survey" relates to the first initial* or renewal survey for the issue of the Passenger Ship Safety Certificate. For ships other than passenger ships, the term "first survey" relates to the first initial, annual or renewal survey for the issue of the Cargo Ship Safety Equipment Certificate or any occasional survey, which implies the confirmation of validity of the certificate. * NOTE: SOLAS regulations I/7 and I/8, and IMO resolution A.746(18) indicate that an initial survey includes all the survey work necessary to issue a certificate before the ship is put in service. Therefore, a ship the keel of which is laid before 1 July 2002, but is put in service and issued a valid safety equipment or passenger safety certificate on/after 1 July 2002 (or 2003 for regulation V/19.2.4) needs to comply with the regulations referenced above when it is put into service. Conversely, a ship which is put in service and issued certificates before 1 July 2002 (or 2003 for regulation V/19.2.4) has until the date of the first annual or the first renewal survey for safety equipment/passenger safety, whichever occurs first after 1 July 2002, (or 2003 for regulation V/19.2.4) to comply.
A	1.3.2	**Examples of repairs, alterations and modifications** 1 Example of substantial alteration of the dimensions of a ship: *Lengthening by adding a new midbody; the new midbody should comply with chapter II-2 of SOLAS 1974, as amended.* 2 Example of substantial alteration of the passenger accommodation spaces: *A vehicle deck converted to passenger accommodation spaces; new accommodation spaces should comply with chapter II-2 of SOLAS 1974, as amended.* 3 Example of substantial increase of a ship's service life: *Renewal of passenger accommodation spaces on one entire deck; renewed accommodation spaces should comply with chapter II-2 of SOLAS 1974, as amended. However, in this case, means of escapes in the areas not subject to renewal are not required to be reviewed in the light of new requirements.*
A	3.1	**Devices in pantries or isolated pantries containing no cooking appliances** Pantries or isolated pantries containing no cooking appliances may contain: - coffee automats, toasters, dish washers, microwave ovens, water boilers, induction heaters and similar appliances each of them with a maximum power of 5 kW, - electrically heated cooking plates and hot plates for keeping food warm each of them with a maximum power of 2 kW and a surface temperature not above 150°C. A dining room containing such appliances should not be regarded as a pantry. This interpretation also covers regulations 9.2.2.3.2.2(9), 9.2.2.4.2.2(3), 9.2.3.3.2.2(3) and 9.2.4.2.2.2(3).

SOLAS chapter II-2		Interpretation or reference
Part	**Regulation**	**Application**
A	3.2.1 3.2.2	**Application of "light-weight constructions"** “Light-weight constructions” (honeycomb type, etc.) of steel or equivalent material may be used as non load-bearing internal "A" class division in accommodation and service spaces provided they have successfully passed the relevant standard fire test according to the FTP Code. These “light-weight constructions” should not be used as an integral part of main fire zone bulkheads and stairway enclosures on passenger ships.
A	3.9.9	**Explanations to communication systems** The communication systems here mean only internal communication systems, which are required by the regulations.
A	3.10	**Adhesives in “C” class construction** Adhesives used in the construction of the “C” class divisions are not required to be non-combustible; however, they are to have low flame-spread characteristics.
A	3.18	**Explanation for control stations** 1 Main navigational equipment includes, in particular, the steering stand and the compass, radar and position-finding equipment. 2 Steering gear rooms containing an emergency steering position are not considered to be control stations. 3 Where in the regulations of chapter II-2 relevant to fixed fire-extinguishing systems there are no specific requirements for the centralization within a control station of major components of a system, such major components may be placed in spaces which are not considered to be a control station. 4 Spaces containing, for instance, the following battery sources should be regarded as control stations regardless of the battery capacity: .1 emergency batteries in separate battery room for power supply from black-out till start of the emergency generator; .2 emergency batteries in separate battery room as reserve source of energy to radio installation; .3 batteries for start of the emergency generator; and .4 in general, all emergency batteries required in pursuance of regulation II-1/42 or II-1/43.
A	3.45	**Devices in main pantries, pantries containing cooking appliances and galleys** 1 Main pantries and pantries containing cooking appliances may contain: - coffee automats, toasters, dish washers, microwave ovens, water boilers, induction heaters and similar appliances each of them with a power of more than 5 kW, - electrically heated cooking plates and hot plates for keeping food warm each of them with a maximum power of 5 kW. This interpretation also covers regulations 9.2.2.3.2.2(13) and 9.2.2.4.2.2(9). 2 Spaces containing any electrically heated cooking plate or hot plate for keeping food warm with a power of more than 5 kW should be regarded as galleys.

SOLAS chapter II-2		Interpretation or reference
Part	**Regulation**	**Application**
B	4.2.1.4	**Use of fuel oil having a flashpoint of 43°C or less and crude oil or slop for tanker boilers** 1 Machineries and piping systems for the usage of fuel oil having a flashpoint of 43°C or less should comply with the following: .1 provisions for the measurement of oil temperature should be provided on the suction pipe of oil fuel pump; .2 stop valves and/or cocks should be provided to the inlet side and outlet side of the oil fuel strainers; and .3 pipe joints of welded construction or of circular cone type or spherical type union joint should be applied as much as possible. 2 Reference is made to IACS requirement M 24 – "Requirements concerning use of crude oil or slop as fuel for tanker boilers".
B	4.2.2.3.4	**Controls for remote operation of the valve for emergency generator fuel tank** The wording "separate location" does not mean separate spaces.
B	4.2.2.4 and 4.2.3.1	**Position of air pipe outlets** Air pipes from oil fuel tanks or heated lubricating oil tanks should be led to a safe position on the open deck. They should not terminate in any place where a risk of ignition is present. Air pipes from unheated lubricating oil (including hydraulic oil) tanks may terminate in the machinery space, provided that the open ends are so situated that issuing oil cannot come into contact with electrical equipment or heated surfaces.
B	4.2.4	**Arrangements for other flammable oils** The second sentence of regulation 4.2.4 is not applicable to hydraulic valves and cylinders located on weather decks, in tanks, cofferdams, or void spaces.
B	4.4.1	**Electric Radiators** Reference is made to IEC Publication 60092 - Electrical installations in ships.
B	4.4.2	**Waste receptacles** This regulation is not intended to preclude the use of containers constructed of combustible materials in galleys, pantries, bars, garbage handling or storage spaces and incinerator rooms provided they are intended purely for the carriage of wet waste, glass bottles and metal cans and are suitably marked.
B	4.4.3	**Surface protection of insulation** The fire insulation in such spaces can be covered by metal sheets (not perforated) or by vapour barrier glass cloth accurately sealed at the joint.
B	4.5.1	**Construction of "cofferdams" and prohibition of containment of cargo, wastes and goods** The expression "cofferdam" means, for the purpose of this regulation, an isolating space between two adjacent steel bulkhead or decks. The minimum distance between the two bulkheads or decks should be sufficient for safe access and inspection. In order to meet the single failure principle, in the particular case when a corner-to-corner situation occurs, this principle may be met by welding a diagonal plate across the corner (see figure of regulation 4.5.1 in the appendix). No cargo, wastes or other goods should be contained in cofferdams.

SOLAS chapter II-2		Interpretation or reference
Part	**Regulation**	**Application**
B	4.5.1.1	**Separation of cargo oil tanks** Pump-rooms intended solely for ballast transfer need not comply with the requirements of regulation 4.5.10. The requirements of regulation 4.5.10 are only applicable to the pump-rooms where pumps for cargo, such as cargo pumps, stripping pumps, pumps for slop tanks, pumps for COW or similar pumps are provided.
B	4.5.2.2	**Gastightness test for navigation bridge external doors and windows** The navigation bridge external doors and windows which are located within the limits of regulation 4.5.2.1 should be tested for gastightness. If a water hose test is applied, the following may be taken as a guide: - nozzle diameter: minimum 12 mm; - water pressure just before the nozzle: not less than 0.2 N/mm^2; and - distance between the nozzle and the doors or windows: maximum 1.5 m.
B	4.5.3.4.1.3	**Area classification and selection of electrical equipment** 1 Areas on open deck, or semi-enclosed spaces on open deck, within a vertical cylinder of unlimited height and 6m radius centred upon the center of the outlet, and within a hemisphere of 6m radius below the outlet which permit the flow of large volumes of vapour, air or inert gas mixtures during loading/discharging/ballasting are defined as Zone 1. Permitted electrical equipment: - Certified safe type equipment for Zone 1. 2 Areas within 4 m beyond the zone specified in 1 above are defined as Zone 2. Permitted electrical equipment: - Certified safe type equipment for Zone 1; - Equipment of a type, which ensures the absence of sparks, “hot spots” during its normal operation; - Equipment having an enclosure filled with a liquid dielectric, the application, or encapsulated; - Pressurized equipment; and - Equipment specifically designed for Zone 2 (for example type “n” protection in accordance with IEC 60079-15). Note: Zones 1 and 2 are those defined in IEC Publication IEC 60092 Electrical installations in ships - Part 502: Tankers - Special features
B	4.5.3.4.1.4	**Reference to IEC 60092-502** Electrical equipment fitted in compliance with IEC Publication 60092- Electrical installations in ships - Part 502: Tankers - Special features is not considered a source of ignition or ignition hazard.
B	4.5.5.3.3	**Meaning of “closed ullage system”** “Closed ullage system” means a system which allows cargo measurement without breaking the integrity of the tank.
B B	4.5.6.1	**Location of outlets and reference to MSC/Circ.677 and MSC/Circ.731** 1 The outlets mentioned in regulation 4.5.6.1 should be located in compliance with regulation 4.5.3.4.1.3 as far as the horizontal distance is concerned. 2 Refer to MSC/Circ.677, as amended by MSC/Circ.1009 - Revised standards for the design, testing and locating of devices to prevent the passage of flame into cargo tanks in oil tankers, and to MSC/Circ.731 - Revised factors to be taken into consideration when designing cargo tank venting and gas-freeing arrangements.

SOLAS chapter II-2		Interpretation or reference
Part	**Regulation**	**Application**
B	4.5.10.1.2	**Emergency lighting** Where the lighting in cargo pump-rooms can be commonly used as the emergency lighting, this lighting should be interlocked with the ventilation systems. However, this interlock should not prevent operation of the emergency lighting in case of the loss of the main source of electrical power.
B	4.5.10.1.3	**Monitoring the concentration of hydrocarbon gases in cargo pump-rooms on oil tankers** 1 Sequential sampling is acceptable as long as it is dedicated for the pump room only, including exhaust ducts, and the sampling time is reasonably short. 2 Detection positions are the zones where air circulation is reduced (e.g. recessed corners).
B	4.5.10.1.4	**Bilge level monitoring devices** Bilge high-level alarms are acceptable as an alternative means for the level monitoring devices.
B	5.2.2.4	**Location of ventilation controls in category A machinery spaces** In machinery spaces of category A, controls to close off ventilation ducts and pipes should be installed with due regard to the hot gases produced by a fire in the space concerned.
B	5.3 and 6.2	**Materials used on passenger ships for bulkheads of accommodation spaces as defined in regulation 3.1** With respect to materials and components used for bulkheads in accommodation spaces, as defined in regulation 3.1, see table of regulations 5.3 and 6.2 in the appendix.
B	5.3 and 6.2	**Fire protection materials for cargo ships** With respect to materials and components used for bulkheads in accommodation spaces, as defined in regulation 3.1, see table of regulations 5.3 and 6.2 in the appendix.
B	5.3.1.1	**Meaning of "cold service systems"** Cold service is understood to mean refrigeration systems and chilled water piping for air-conditioning systems.
B	5.3.2.2	**Calorific value** Reference is made to the recommendations published by the International Organization for Standardization, in particular, Publication ISO 1716:2002 on ***Determination of the heat of combustion***
B	5.3.2.4	**Application to materials used on surfaces of bulkheads, ceilings and linings** Surfaces referred to in regulations 5.3.2.4 are those of bulkheads, decks, floor coverings, wall linings and ceilings as appropriate. The requirements described within these regulations are not meant to apply to plastic pipes, electric cables, and furniture.
B	6.2	**Application to materials used for bulkheads and on surfaces of bulkheads, ceilings and linings** Surfaces referred to in regulations 6.2 are those of bulkheads, decks, floor coverings, wall linings and ceilings as appropriate. The requirements described within these regulations are not meant to apply to plastic pipes, electric cables, and furniture.
C	7.8.3	**Degree of protection and audibility of two-way portable telephone apparatus used in special cargo spaces** 1 On ships provided with special category spaces, ro-ro spaces or cargo spaces for the carriage of dangerous goods, the two-way portable telephone apparatus should be of certified safe type for use in zone 1 areas as defined in IEC Publication 60079 - Electrical Apparatus for Explosive Gas Atmospheres. 2 Two-way portable telephone apparatus should be audible from most parts of the ship. As a minimum, they should be audible where the fire patrol makes their rounds such as key box locations and the routes specified on fire patrol checklist. If necessary, extra antennas should be fitted to obtain effective communication.

SOLAS chapter II-2		Interpretation or reference
Part	**Regulation**	**Application**
C	8.2	**Equally effective local ventilation closing arrangements for control stations** Equally effective local closing arrangements means that in case of ventilators these should be fitted with fire dampers or smoke dampers which could be closed easily within the control station in order to maintain the absence of smoke in the event of fire.
C	8.3.3	**Location of ventilation controls in category A machinery spaces** In machinery spaces of category A, controls to close off ventilation ducts and pipes should be installed with due regard to the hot gases produced by a fire in the space concerned.
C	8.4	**Construction and location of draught stops** 1 Any of the following methods of construction may be used to construct draught stops: .1 the extension of the "B" Class bulkhead, ceiling or lining; .2 the extension of the "C" Class bulkhead, ceiling or lining; .3 1 mm thick minimum steel sheet, stiffened where necessary, intermittently welded to the ship's structure and the top profile of the bulkhead, or fastened mechanically to the ceilings or linings; .4 non-combustible board type material fastened mechanically to the ship's structure, bulkheads, ceilings or linings; or .5 non-combustible mineral wool insulation, not less than 20 mm in thickness, faced on each side with expanded metal mesh, the mesh on one side being attached to the ship's structure, or expanded metal mesh may be fitted on one side and non-combustible cloth (glass-cloth) on the other side of mineral wool insulation. Other equivalent arrangements may be accepted. 2 Draught stops are not required in public spaces with open ceilings (perforated ceilings) with openings of 40% or more.
C	8.5	**Arrangement of exhaust fans for smoke extraction systems** The application of this regulation does not imply the arrangement of additional exhaust fans other than those normally dedicated to the space considered, if these latter fans are of sufficient size to meet the required capacity.
C	9.2.2.1	**Main vertical zones and horizontal zones** If a stairway serves two main vertical zones, the maximum length of one main vertical zone should be measured from the far side of the main vertical zone stairway enclosure. In this case, all boundaries of the stairway enclosure be insulated as main vertical zone bulkheads and access doors leading into the stairway should be provided from the zones (see figures 1 to 4 of regulation 9.2.2.1 in the appendix). However, the stairway should not be included in calculating the size of the main vertical zone if it is treated as its own main vertical zone.
C	9.2.2.2.2.1	**Construction of extended bulkhead behind continuous ceilings or linings** The extension of the bulkhead should be made of non-combustible material and the construction of the extension should correspond to the fire class of extended bulkhead. If the extended bulkhead is of B-0, then the extension may be made of thin steel plates of 1 mm thickness and tightened (e.g. with mineral wool). Alternatively, B-0 class extensions may be constructed of a suitably supported mineral wool (density at least 100 kg/m^3, thickness at least 50 mm).
C	9.2.2.2.3	**Bulkheads within a main vertical zone** Refer to MSC/Circ.917

SOLAS chapter II-2		Interpretation or reference
Part	**Regulation**	**Application**
C	9.2.2.3.2.2 (7)	**Electrical distribution boards** Distribution boards may be located behind panels/linings within accommodation spaces including stairway enclosures, without the need to categorize the space, provided no provision is made for storage. If distribution boards are located in an identifiable space having a deck area of less than 4 m^2, this space may be categorized in (7), according to regulation 9.2.2.3.2.2, or (5), according to regulations 9.2.2.4.2.2, 9.2.3.3.2.2 and 9.2.4.2.2.2
C	9.2.2.3.2.2 (7)	**Devices in diet kitchens** Diet kitchens (containing no open flame) should be in compliance with the interpretation for pantries as stated under regulation 3.1.
C	9.2.2.4.2.2 (5)	**Electrical distribution boards** Distribution boards may be located behind panels/linings within accommodation spaces including stairway enclosures, without the need to categorize the space, provided no provision is made for storage. If distribution boards are located in an identifiable space having a deck area of less than 4 m^2, this space may be categorized in (7), according to regulation 9.2.2.3.2.2, or (5), according to regulations 9.2.2.4.2.2, 9.2.3.3.2.2 and 9.2.4.2.2.2
C	9.2.2.4.5	**Construction and arrangements of saunas** The space categories mentioned in regulation 9.2.2.3.4.1 should be replaced, when applying this regulation, by (5), (7) and (10).
C	table 9.3 table 9.4	**Interpretation of machinery spaces having little or no fire risk** For the definition of machinery spaces having little or no fire risk in footnote "f" see regulation 9.2.2.3.2.2 (10).
C	9.2.3.1.1.3	**Increased area of public spaces** The area of public spaces may be permitted to increase up to 75 m^2.
C	9.2.3.2.4	**Increased area of public spaces** The area of public spaces may be permitted to increase up to 75 m^2.
C	table 9.5 table 9.6	**Interpretation of machinery spaces having little or no fire risk** For the definition of machinery spaces having little or no fire risk in footnote "i" see regulation 9.2.2.3.2.2 (10).
C	9.2.3.3.2.2 (5)	**Electrical distribution boards** Distribution boards may be located behind panels/linings within accommodation spaces including stairway enclosures, without the need to categorize the space, provided no provision is made for storage.

SOLAS chapter II-2		Interpretation or reference
Part	**Regulation**	**Application**
		If distribution boards are located in an identifiable space having a deck area of less than 4 m^2, this space may be categorized in (7), according to regulation 9.2.2.3.2.2, or (5), according to regulations 9.2.2.4.2.2, 9.2.3.3.2.2 and 9.2.4.2.2.2.
C	9.2.3.3.5	**Construction and arrangements of saunas** The space categories mentioned in regulation 9.2.2.3.4.1 should be replaced, when applying this regulation, by (5), (7) and (10).
C	9.2.3.4.1	**Construction of protected stairways** The required protection of stairways penetrating more than a single deck can be achieved by: .1 a stairway enclosure allowing access from one stair to a superimposed stair within such enclosure, the entrances to which should consist self-closing "A" class fire doors at each deck level (see figure 1 of regulation 9.2.3.4.1 in the appendix); or .2 a stairway enclosure enclosing the stairs only, in combination with self-closing "A" class fire doors at each deck-level and at each end of a stair. No requirements apply to the stairs except that they should be of steel frame structure or be made of equivalent material (see figure 2.1 of regulation 9.2.3.4.1 in the appendix); or .3 stairways that penetrate only one single deck should be protected, at a minimum, at one level by at least "B-0" class division and self-closing doors (see figure 2.2 of regulation 9.2.3.4.1 in the appendix).
C	9.2.3.4.1	**Construction of dumb-waiters** Dumb-waiters are to be regarded as lifts.
C	9.2.4.2.2.2 (5)	**Electrical distribution boards** Distribution boards may be located behind panels/linings within accommodation spaces including stairway enclosures, without the need to categorize the space, provided no provision is made for storage. If distribution boards are located in an identifiable space having a deck area of less than 4 m^2, this space may be categorized in (7), according to regulation 9.2.2.3.2.2, or (5), according to regulations 9.2.2.4.2.2, 9.2.3.3.2.2 and 9.2.4.2.2.2
C	9.2.4.2.7	**Construction and arrangements of saunas** The space categories mentioned in regulation 9.2.2.3.4.1 should be replaced, when applying this regulation, by (5), (7) and (10).
C	table 9.7 table 9.8	**Interpretation of machinery spaces having little or no fire risk** For the definition of machinery spaces having little or no fire risk in footnote "e" see regulation 9.2.2.3.2.2 (10).
C	9.3.1	**Reference to resolution A.753(18)** Reference is made to resolution A.753(18) – Guidelines for the application of plastic pipes on ships.
C	9.3.4	**Prevention of heat transmission by insulation and structural details for drainage** 1 Details of measures to be adopted for avoiding heat transmission at intersections and terminal points of insulation of decks or bulkheads are given in figures 1 and 2 of regulation 9.3.4 in the appendix.

SOLAS chapter II-2		Interpretation or reference
Part	**Regulation**	**Application**
		Alternative details may be accepted provided that the effectiveness of such design is verified by an appropriate test in the same manner as those specified in the FTP Code. 2 In the case where the lower part of insulation has to be cut for drainage, the construction should be in accordance with the structural details as given in figure 3 of regulation 9.3.4 in the appendix.
C	9.4.1.1	**Reference to MSC/Circ.541** Reference is made to MSC/Circ.541 - Guidance notes on the integrity of flooding boundaries above the bulkhead deck of passenger ships for proper application of regulations II-1/8 and 20, paragraph 1, of the 1974 SOLAS Convention, as amended.
C	9.4.1.1.2	**Doors in divisions of a higher standard and fire testing of watertight doors** 1 Where required divisions are replaced by divisions of a higher standard, the door need only conform to the required division. 2 Watertight doors constructed in accordance with SOLAS regulation II-1/15 and fitted below the bulkhead deck that are required to be watertight need not be tested to the FTP Code provided that the doors meet the requirements for water tightness in SOLAS regulation II-1/18. Doors fitted above the bulkhead deck, which are required to meet both the fire protection and watertight requirements (see MSC/Circ.541), should be tested to the FTP Code.
C	9.4.1.1.4.6	**Lift door indicators located in continuously manned central control station** Lift door indication signals should meet the following: .1 the signal showing that "A" class lift doors are in the closed position should be activated only when the order to close the main fire doors has been given by the continuously manned central control station; .2 when there are several lifts giving access to the same stairway, the lift door indicators located in the continuously manned central control station should be capable of indicating that all the lift doors giving access to the same landing are properly closed. This indication should be shown on the panel.
C	9.4.1.1.8	**Type of means of manual closing of fire dampers** Manual closing may be achieved by mechanical means of release or by remote operation of the fire damper by means of a fail-safe electrical switch or pneumatic release (spring-loaded, etc.) on both sides of the division.
C	9.4.1.3	**Reference is made to the following ISO standards:** ISO 614:1989 Shipbuilding and marine structures - Toughened safety glass panes for rectangular windows and side scuttles - Punch method of non-destructive strength testing ISO 1095:1989 Shipbuilding and marine structures - Toughened safety glass panes for side scuttles ISO 1751:1993 Shipbuilding and marine structures - Ship's side scuttles ISO 3254:1989 Shipbuilding and marine structures - Toughened safety glass panes for rectangular windows

SOLAS chapter II-2		Interpretation or reference
Part	**Regulation**	**Application**
		ISO 3903:1993 Shipbuilding and marine structures - Ships' ordinary rectangular windows ISO 3904:1990 Shipbuilding and marine structures - Clear view screens
C	9.4.2.1	**Doors in divisions of a higher standard** Where required divisions are replaced by divisions of a higher standard, the door need only conform to the required division. **Doors in fire-resisting divisions of cargo ships** Steel or equivalent material is acceptable for the construction of doors and door frames in "A" class divisions.
C	9.7	**Definition of "free sectional area"** The term "free sectional area" means, even in the case of a pre-insulated duct, the area calculated on the basis of the inner diameter of the duct.
C	9.7.3.1.2	**Type of means of closing** Manual closing may be achieved by mechanical means of release or by remote operation of the fire damper by means of a fail-safe electrical switch or pneumatic release (spring-loaded, etc.) on both sides of the division.
C	9.7.4.3	**Ventilation system penetrating decks** A duct, irrespective of its cross section, serving more than one tweendeck should be fitted, near the penetration of each deck served, with a fire or smoke damper. Such dampers should close automatically by means of a fusible link or other suitable device, and manually from the deck in which the passage of smoke, due to a fire in the deck immediately below which is served by the same duct, will be avoided. Where, within a main vertical zone, a fan serves more than one tweendeck through separate ducts, each of these dedicated to a single tweendeck, each duct should be provided with a manually operated smoke damper fitted close to the fan.
C	9.7.5.1.2	**Meaning of "lower end of the duct" and "upper end of the duct" in galley range ducts** 1 "Lower end of the duct" means a position at the junction between the duct and the galley range hood. (See also interpretation of regulation 41-2.4.3.2.) 2 "Upper end of the duct" means a position close to the outlet of the duct.
C	9.7.5.1.5	**Location of hatches for inspection and cleaning in galley range ducts** 1 One hatch should be provided close to the exhaust fan. 2 In the galley exhaust duct, the grease will accumulate more in the lower end. Therefore, hatches should be fitted also in this part of the duct.
C	10.2.1.1	**Prevention of freezing in pipes** Special attention should be given to the design of the continuously pressurized pipelines for prevention of freezing in pipes where low temperatures may exist.
C	10.2.1.5.1	**Location of hydrant in machinery spaces** At least one hydrant with hose, nozzle and coupling wrench should be provided in machinery spaces of category A.

SOLAS chapter II-2		Interpretation or reference
Part	**Regulation**	**Application**
C	10.2.2.3.2.2	**Electrical cables for the emergency fire pump** The electrical cables to the emergency fire pump are not to pass through the machinery spaces containing the main fire pumps and their source(s) of power and prime mover(s). They are to be of a fire resistant type, in accordance with IACS unified Requirement E 15 Electrical Services Required to be Operable Under Fire Conditions and Fire Resistant Cables, paragraph 1, where they pass through other high fire risk areas.
C	10.2.2.3.3	**Connection of a pump to fire main** This paragraph does not force designers to choose pumps with capacity and pressure characteristics other than that being optimal for the service intended, just to make their connection to the fire main possible, provided the required number and capacity of fire pumps are already fitted.
C	10.4.3	**Storage rooms for fire-extinguishing medium** The following requirements are applicable only for the storage rooms for fire-extinguishing media of fixed gas fire-extinguishing systems: .1 the storage room should be used for no other purposes (last part of the first sentence*); .2 if the storage space is located below deck, it should be located no more than one deck below the open deck and should be directly accessible by a stairway or ladder from the open deck (3rd sentence); .3 spaces which are located below deck or spaces where access from the open deck is not provided, should be fitted with a mechanical ventilation system designed to take exhaust air from the bottom of the space and should be sized to provide at least 6 air changes per hour (4th sentence); and .4 access doors should open outwards, and bulkheads and decks including doors and other means of closing any opening therein, which form the boundaries between such rooms and adjacent enclosed spaces should be gas tight (5th sentence). * Refers to the sentences in regulation 10.4.3.
C	10.5	**Fire extinguishing arrangements in machinery spaces** The number of systems, appliance and extinguisher required by regulation 10.5 are summarized in the table of regulation 10.5 in the appendix.
C	10.5.2.2.2	**Relaxation of fire-extinguishing equipment for cargo ships** A relaxation for cargo ships should be accepted as follows: - The 45 *l* foam type extinguisher or its equivalent may be arranged outside of the space concerned.
C	10.5.6.3.1	**Definition of areas to be protected by local application systems (internal combustion machinery)** Hot surfaces such as exhaust pipes without insulation or with insulation likely to be removed frequently for maintenance and high-pressure fuel oil systems installed nearby the hot surfaces should be protected.

SOLAS chapter II-2		Interpretation or reference
Part	**Regulation**	**Application**
		The term "insulation likely to be removed frequently" means insulation fitted in accordance with the requirements of regulation 4.2.2.6.1, but which might not be secured firmly because it may be removed frequently for periodic maintenance, such as pipes between cylinders and exhaust manifold. For typical diesel engines, the area on top of the engine, fuel oil injection pumps and turbo chargers should be protected. Where the fuel oil injection pumps are located in sheltered position such as under the steel platform, the pump need not be protected by the system.
C	10.5.6.3.2	**Definition of areas to be protected by local application systems (boiler fronts)** The area around the burners without insulation or with insulation likely to be removed frequently for maintenance should be protected. The term "insulation likely to be removed frequently" means insulation fitted in accordance with the requirements of regulation 4.2.2.6.1, but which might not be secured firmly because it may be removed frequently for periodic maintenance. Oil-fired inert gas generators should be also protected in the same manner.
C	10.5.6.3.3	**Definition of areas to be protected by local application systems (incinerators)** The area around the burner(s) without insulation or with insulation likely to be removed frequently for maintenance should be protected. The term "insulation likely to be removed frequently" means insulation fitted in accordance with the requirements of regulation 4.2.2.6.1, but which might not be secured firmly because it may be removed frequently for periodic maintenance.
C	10.7.1.3	**Cargo spaces for which a fixed fire-extinguishing system is ineffective and reference to MSC/Circ.671** For cargoes for which a fixed gas fire-extinguishing system is ineffective and for which a fire-extinguishing system giving equivalent protection should be available, reference is made to MSC/Circ.671, annex, and table 2.
C	10.7.2	**Equivalent protection** Water supplies defined in regulation 19.3.1.2 are considered as an acceptable protection for cargoes listed in table 2 of MSC/Circ. 671. **Ships carrying dangerous goods on deck only** Any cargo space in a ship engaged in the carriage of dangerous goods on deck or in cargo spaces should be provided with a fixed gas fire-extinguishing system complying with the provisions of the FSS Code or with a fire-extinguishing system which, in the opinion of the Administration, gives equivalent protection for the cargoes carried.
C	11.3.1	**Insulation of aluminium decks and interpretation of "load-bearing divisions"** 1 If an aluminium deck is tested with insulation installed below the deck, then the result will apply to decks, which are bare on the top. Aluminium decks may not be provided with deck coverings on the top unless tested with the deck covering, to verify that the 200°C temperature of the aluminium is not exceeded. However, when needed, any approved primary deck covering (not specifically the one used during the standard fire test of the deck) may be used for meeting this requirement. 2 When spaces of category (1) to (10) in regulation 9.2.2.3 or of category (1) to (5) and (10) in regulation 9.2.2.4 are located on top of aluminium decks, the deck does not need to be insulated from the upper side, provided the deck is protected by an approved deck covering.

SOLAS chapter II-2		Interpretation or reference
Part	**Regulation**	**Application**
		3 "Load-bearing division" is a deck or bulkhead including stiffeners, pillars, stanchions and other structural members which, if eliminated, would adversely affect the designated structural strength of the ship.
C	11.6.2.2	**Area classification and selection of electrical equipment** 1 Areas on open deck, or semi-enclosed spaces on open deck, within 3 m of cargo tank ventilation outlets which permit the flow of small volumes of vapor, air or inert gas mixtures caused by thermal variation are defined as Zone 1. Permitted electrical equipment: - Certified safe type equipment for Zone 1. 2 Areas within 2 m beyond the zone specified in 1 above are defined as Zone 2. Permitted electrical equipment: - Certified safe type equipment for Zone 1, - Equipment of a type, which ensures the absence of sparks, "hot spots" during its normal operation, - Equipment having an enclosure filled with a liquid dielectric, the application, or encapsulated, - Pressurised equipment, - Equipment specifically designed for Zone 2 (for example type "n" protection in accordance with IEC Publication 60079-15). Note**:** Zones 1 and 2 are those defined in IEC Publication IEC 60092 Electrical installations in ships - Part 502: Tankers - Special features.
C	11.6.2.2	**Electrical equipment in areas next to cargo tank ventilation outlets which permit flow of small volumes of vapour** Permitted electrical equipment: .1 Areas on open deck within 3 m of cargo tank ventilation outlets which permit the flow of small volumes of vapour caused by thermal variation: - certified safe type equipment. .2 Areas 2 m beyond the zone specified in .1 above: - certified safe type equipment; or - equipment of a type which ensures absence of sparks or arcs and absence of ignition capable surface during normal operation; or - equipment specifically designed for Zone 2 as defined in IEC Publication 60092 Electrical installations in ships - Part 502: Tankers - Special features.
D	13.3.2.3	**Direct access to stairway enclosures** Direct access to escape stairway enclosures is only intended for those areas of an accommodation space as defined in regulation 3.39 for public spaces. Portions of an accommodation space that serve a purpose different than that of a public space such as theatre backstage areas, should not have direct access to escape stairway enclosures.
D	13.3.2.4.1	**Means of escape** The stairway arrangement required by regulation 13.3.2.4.1 for below bulkhead deck compartments of one main vertical zone can be arranged by:

SOLAS chapter II-2		Interpretation or reference
Part	**Regulation**	**Application**
		- one enclosed stairway which provides a continuous fire shelter from the level of its origin to the embarkation deck in one watertight compartment; - each of the other compartments have an enclosed stairway which provides a continuous fire shelter from the level of its origin to the bulkhead deck; and - the continuous fire shelter is also provided on the bulkhead deck trough a route protected as a category 2 space (horizontal stairway). See figure of regulation 13.3.2.4.1 in the appendix. In applying this interpretation, the content of regulation 13.3.2.1.1 should also be taken into account.
D	13.3.2.4.4	**Size of enclosed means of escape in atriums** Such enclosed means of escape should be sized taking into account the total number of persons at each level of the atrium considered.
D	13.3.3	**Locking arrangements and accessibility to embarkation decks** 1 The escape routes are routes for escape and also for access. Accordingly, the locking arrangement should be such that it does not obstruct these two objectives (escape and access). Doors along any designated escape routes which require keys to unlock them when moving in the direction of escape should not be permitted. 2 The embarkation deck should be accessible from the open decks to which escapes routes lead.
D	13.4.1.1.1	**Arrangement of means of escape (passenger ships)** Ladders having strings of flexible steel wire ropes are not acceptable in such escape routes.
D	13.4.2.1.1	**Arrangement of means of escape (cargo ships)** Ladders having strings of flexible steel wire ropes are not acceptable in such escape routes.
D	13.6	**Arrangement of escape routes in ro-ro cargo spaces** The escape (and access) routes should be so arranged to ensure safe escape also during loading and unloading such as indication of escape lane on deck with minimum clearance of 600 mm in width.
D	13.7.4	**Evacuation Analysis** Reference is made to MSC/Circ.1033 - Interim Guidelines for evacuation analysis for new and existing passenger ships.
	15.2.4	**Fire control plans** Reference is made to Assembly Resolution A.952(23) – Graphical symbols for shipboard fire control plans.
G	19.2.2.2	**Meaning of "purpose-built container spaces"** A purpose-built container space is a cargo space fitted with cell guides for stowage securing of containers.

SOLAS chapter II-2		Interpretation or reference
Part	**Regulation**	**Application**
G	19.2.2.3	**Extended meaning of "ro-ro spaces"** Ro-ro spaces include special category spaces (see regulation 20).
G	19.3.1	**Water supplies for open-top container spaces in ships** 1 The water spray system required in paragraphs 9.2, 9.3 and 9.4 of MSC/Circ.608/Rev.1 - Interim guidelines for open-top container ships - will also satisfy the requirement for dangerous goods. 2 The amount of water required for fire-fighting purposes in the largest hold should allow simultaneous use of the water spray system plus four jets of water from hose nozzles.
G	19.3.1.2	**Hydrants for dangerous goods** The number and position of hydrants should be such that at least two of the required four jets of water, when supplied by single lengths of hose, may reach any part of the cargo space when empty; and all four jets of water, each supplied by single lengths hose may reach any part of ro-ro cargo spaces.
G	19.3.1.4	**Acceptance of high expansion foam systems in case of dangerous goods** A fixed high expansion foam system, complying with the FSS Code, chapter 6, section 2.2, is acceptable, except if cargoes dangerously react with water (see IMDG Code).
G	19.3.2	**Sources of Ignition** Reference is made to the recommendations of the International Electrotechnical Commission, in particular, IEC Publication 60092 Electrical installations in ships – Part 506: Special feature- Ships carrying specific dangerous goods and materials hazardous only in bulk.
G	19.3.4	**Ventilation requirements for individual cargoes and open-top container cargo holds** 1 General If adjacent spaces are not separated from cargo spaces by gastight bulkheads or decks, ventilation requirements should apply as for the cargo space itself, required under regulation 19.3.4.2 and its interpretations. 2 Requirements for individual cargoes .1 Cargoes liable to give off vapours or gases which can form an explosive mixture with air (See the BC Code, Appendix B, e.g. IMO Class 4.3 materials): Two separate fans should be permanently fitted or being of a portable type adapted for being permanently fitted prior to loading and during voyage. The fans should be either explosion proof or arranged such that the escaping gas flow is separated from electrical cables and components. The total ventilation should be at least six air changes per hour, based upon the empty space. Ventilation should be such that any escaping gases cannot reach living spaces on or under deck. .2 Cargoes liable to spontaneous combustion (only applicable to seed cake (b) and (c)):

SOLAS chapter II-2		Interpretation or reference
Part	**Regulation**	**Application**
		Two separate fans should be permanently fitted or being of a portable type adapted for being permanently fitted prior to loading and during voyage. The fans should be either explosion proof or arranged such that the escaping gas flow is separated from electrical cables and components. The total ventilation should be at least six air changes per hour, based upon the empty space. Ventilation should be such that any escaping gases cannot reach living spaces on or under deck. 3 For open-top containerships Power ventilation should be required only for the lower part of the cargo hold for which purpose ducting is required. The ventilation capacity should be at least two air changes per hour, based on the empty hold volume below weather deck.
G	19.3.4.2	**Degree of protection of exhaust fans and use of wire mesh guards** 1 Exhaust fans should be of non-sparking type in accordance with IACS Requirement F 29, as revised. 2 The purpose of "suitable wire mesh guards" is to prevent foreign objects from entering into the fan casing. The standard wire mesh guards should have a size of 13 mm x 13 mm.
G	19.3.5.4	**Arrangements of bilge drainage systems for cargo spaces** Electrical equipment in the space should comply with IEC Publication 60092.- Electrical installations in ships.
G	19.3.6.1	**Type and suitability of protective clothing** 1 When selecting the protective clothing the danger of the chemicals according to the class and liquid or gaseous state should be taken into account. 2 The required protective clothing is for emergency purposes. 3 For solid bulk cargoes the protective clothing should satisfy the equipment requirements specified in Appendix E of the BC Code for the individual substances. For packaged goods the protective clothing should satisfy the equipment requirements specified in emergency procedures (EmS) of the Supplement to IMDG Code for the individual substances.
G	19.4	**Certification of special dangerous goods** Certification for carriage of solid dangerous bulk cargoes covers only those cargoes listed in Appendix B of the BC Code except cargoes of MHB. Other solid dangerous bulk cargoes may only be permitted subject to acceptance by the Administrations involved.
G	20.2.2.1	**Horizontal fire zone concept** The "total overall clear height" is the sum of distances between deck and web frames of the decks forming one horizontal zone.
G	20.3.1.1	**Capacity of ventilation systems** Reference is made to MSC/Circ.729 - Design guidelines and operational recommendations for ventilation systems in ro-ro cargo spaces.
G	20.3.1.3	**Alarm in case of loss of ventilation capacity** The requirement to indicate any loss of ventilating capacity is considered complied with by an alarm on the bridge, initiated by fall-out of starter relay of fan motor.

SOLAS chapter II-2		Interpretation or reference
Part	**Regulation**	**Application**
G	20.3.1.4.2	**Arrangement and construction of ventilation ducts on cargo ships** Ventilation ducts should not pass through machinery spaces of category A unless fire insulated to A-60 standard.
G	20.3.2.2	**Degree of protection of electrical equipment 450 mm above deck** For equipment above a height of 450 mm above deck the degree of protection of electrical equipment required by this regulation will be realized: .1 by an enclosure of at least IP 55 as defined in IEC Publication 600529 - Classification of Degree of Protection Provided by Enclosures; or .2 by apparatus for use in zone 2 areas as defined in Publication 60079 - Electrical Apparatus for Explosive Gas Atmospheres (Temperature class T3).
G	20.3.3	**Degree of protection of electrical equipment in exhaust ventilation ducts and of exhaust fans** 1 The electrical equipment referred to in these regulations should be of certified safe type and wiring, if fitted, and should be suitable for use in zone 1 areas as defined in IEC Publication 60079 - Electrical Apparatus for Explosive Gas Atmospheres (Gas group II A and temperature class T3). 2 Exhaust fans should be of non-sparking type in accordance with IACS Requirement F 29, as revised.
G	20.4.1	**Arrangements for disconnecting detector sections during loading and unloading** The smoke detector sections in vehicle, special category, and ro-ro spaces may be provided with an arrangement, (e.g. a timer) for disconnecting detector sections during loading and unloading of vehicles to avoid "false" alarms. The time of disconnection should be adapted to the time of loading/unloading. The central unit should indicate whether the detector sections are disconnected or not. However, manual call points should not be capable of being disconnected by the arrangements referred to above.
G	20.6.1.4.1.1	**Sizing of scuppers and drainage pumps** For the sizing of scuppers and drainage pumps the capacity of both the water spraying system pumps and the water discharge from the required number of fire hose nozzles specified in regulations 10.2.1.5.1 and 19.3.1, as applicable, should be taken into account.
G	20.6.2.1	**Portable fire extinguishers on weather decks used as ro-ro cargo space** The requirements set out in this regulation need not to be applied to weather decks used as ro-ro cargo spaces.

INTERPRETATIONS OF VAGUE EXPRESSIONS, OTHER VAGUE WORDING AND REFERENCES IN THE FIRE SAFETY SYSTEMS (FSS) CODE

FFS Code		Interpretation or reference
Chapter	**Paragraph**	
3	2.1.1.4	**Personal Equipment** Reference is made to IEC Publication 60079- Electrical Apparatus for Explosive Gas Atmospheres.
4	--	**Fire Extinguishers** Reference is made to resolution A.951(23) - improved Guidelines for marine portable fire extinguishers, as amended by resolution A.951(23).
4	2.1.1.2	**Equivalents of fire extinguishers** Reference is made to the international standard on fire protection equipment - portable fire extinguisher - performance and construction, to be developed by ISO *(ISO/DIS 7156E).*
4	3.1.2	**Recharging of spare charges** Partially emptied extinguishers should also be recharged.
5	2.1.1.1	**Separation of spaces** Two spaces can be considered as separated spaces where fire divisions as required by regulations 9.2.2, 9.2.3 and 9.2.4, as appropriate, or divisions of steel are provided between them.
5	2.1.1.3	**Means for checking the quantity of medium in containers** Means for checking the quantity of medium in containers should be so arranged that it is not necessary to move the containers completely from their fixing position. This is achieved, for instance, by providing hanging bars above each bottle row for a weighing device or by using suitable surface indicators.
5	2.1.3.2	**Certain spaces for which the automatic warning of release of the extinguishing medium is required** Ordinary cargo holds need not comply with regulation 2.1.3.2. However, ro/ro cargo spaces, holds in container ships equipped for integrated reefer containers and other spaces where personnel can be expected to enter and where the access is therefore facilitated by doors or manway hatches should comply with the above regulation. .

FFS Code		Interpretation or reference
Chapter	**Paragraph**	
5	2.2	**Low pressure CO_2 systems** Where a low pressure CO_2 system is fitted to comply with this regulation, the following applies: 1 The system control devices and the refrigerating plants should be located within the same room where the pressure vessels are stored. 2 The rated amount of liquid carbon dioxide should be stored in vessel(s) under the working pressure in the range of 1.8 to 2.2 N/mm^2. The normal liquid charge in the container should be limited to provide sufficient vapour space to allow for expansion of the liquid under the maximum storage temperatures than can be obtained corresponding to the setting of the pressure relief valves but should not exceed 95% of the volumetric capacity of the container. 3 Provision should be made for: - pressure gauge; - high pressure alarm: not more than setting of the relief valve; - low pressure alarm: not less than 1.8 N/mm^2; - branch pipes with stop valves for filling the vessel; - discharge pipes; - liquid CO_2 level indicator, fitted on the vessel(s); - two safety valves. 4 The two safety relief valves should be arranged so that either valve can be shut off while the other is connected to the vessel. The setting of the relief valves should not be less than 1.1 times working pressure. The capacity of each valve should be such that the vapours generated under fire condition can be discharged with a pressure rise not more than 20% above the setting pressure. The discharge from the safety valves should be led to the open. 5 The vessel(s) and outgoing pipes permanently filled with carbon dioxide should have thermal insulation preventing the operation of the safety valve in 24 hours after de-energizing the plant, at ambient temperature of 45°C and an initial pressure equal to the starting pressure of the refrigeration unit. 6 The vessel(s) should be serviced by two automated completely independent refrigerating units solely intended for this purpose, each comprising a compressor and the relevant prime mover, evaporator and condenser. 7 The refrigerating capacity and the automatic control of each unit should be so as to maintain the required temperature under conditions of continuous operation during 24 hours at sea temperatures up to 32°C and ambient air temperatures up to 45°C. 8 Each electric refrigerating unit should be supplied from the main switchboard busbars by a separate feeder. 9 Cooling water supply to the refrigerating plant (where required) should be provided from at least two circulating pumps one of which being used as a stand-by. The stand-by pump may be a pump used for other services so long as its use for cooling would not interfere with any other essential service of the ship. Cooling water should be taken from not less than two sea connections, preferably one port and one starboard. 10 Safety relief devices should be provided in each section of pipe that may be isolated by block valves and in which there could be a build-up of pressure in excess of the design pressure of any of the components. 11 The piping system should be designed in such a way that the CO_2 pressure at the nozzles should not be less than 1 N/mm^2.

FFS Code		Interpretation or reference
Chapter	Paragraph	
		12 Audible and visual alarms should be given in a central control station when: - the pressure in the vessel(s) reaches the low and high values according to 2; - any one of the refrigerating units fails to operate; - the lowest permissible level of the liquid in the vessels is reached. 13 If the system serves more than one space, means for control of discharge quantities of CO_2 should be provided, e.g. automatic timer or accurate level indicators located at the control position(s). 14 If a device is provided which automatically regulates the discharge of the rated quantity of carbon dioxide into the protected spaces, it should be also possible to regulate the discharge manually.
7	2.1.1.2	**Areas for increased application rates** An indication of areas for which increased application rates may be required is given below: ***Protected Area*** — ***Application rate*** Boiler fronts or roof, firing areas, oil fuel units, centrifugal separators (not oily water separators), oil purifiers, and clarifiers. — 20 l/min/ m^2 Hot oil fuel pipes near exhausts or similar heated surfaces on main or auxiliary diesel engines — 10 l/min/m^2
8	2.1.1	**Dry pipe systems in saunas** For the definition of "dry pipe system" see resolution A.800(19), Annex, paragraph 2.3.
8	2.5.2.3	**Definition of nominal area** Nominal area is defined as being the gross, horizontal projection of the area to be covered.
9	2.4.1.1	**Acceptable activating arrangements** The following arrangement may be acceptable to: .1 activate a paging system; .2 activate the fan stops; .3 activate the closure of fire doors; .4 activate the closure of fire dampers; .5 activate the sprinkler system; .6 activate the smoke extraction system; and .7 activate the low-location lighting system.
9	2.1.4	**Relevant definitions** *Loop* means electrical circuit linking detectors of various sections in a sequence and connected (input and output) to the indicating unit(s). *Zone address identification capability* means a system with individually identifiable fire detectors.

FFS Code		Interpretation or reference
Chapter	**Paragraph**	
9	2.1.3	**Testing of detectors within cold spaces** Detectors installed within cold spaces such as refrigerated compartments should be tested according to IEC Publication 60068-2-1 - Section one - Test Aa.
10	2.1.2	**Calculation of intervals** The interval (I) should depend on the number of scanning points (N) and the response time of the fans (T). (See interpretation of paragraph 2.2.2 chapter 10 below.) With a 20 % allowance: $I = 1.2 \times T \times N$ However, the maximum allowable interval should not exceed 120 s (I_{max} = 120 s).
10	2.2.2	**Response time for fans** Depending on the capacity of the fans and the length of system piping the maximum response time of the fans in combination with the system piping should be around 15 s.
12	2.2.2.1	**Heating of diesel driven power sources and other means of starting** 1 If the room for the diesel driven power source is not heated, the diesel driven power source for the pump should be fitted with electric heating of cooling water or lubricating oil. 2 The other means of starting include those by compressed air, electricity, or other sources of stored energy, hydraulic power or starting cartridges.
13	2.2.4	**Size of landings and intermediate landings** If landings can be entered directly via entrance doors, situated in stairway enclosures, the area of such landings should comply with the requirements of paragraph 2.2.4 of chapter 13. However, if landings cannot be entered by entrance doors, such landings should be considered as intermediate landings which should comply with the capacity requirements as given in paragraph 2.3.1 of chapter 13.
14	2.1.3	**Capacity, use and handling of deck foam systems** A common line for fire main and deck foam line can only be accepted provided it can be demonstrated that the hose nozzles can be effectively controlled by one person when supplied from the common line at a pressure needed for operation of the monitors. Additional foam concentrate should be provided for operation of 2 nozzles for the same period of time required for the foam system. The simultaneous use of the minimum required jets of water should be possible on deck over the full length of the ship, in the accommodation, service spaces, control stations and machinery spaces.
14	2.3.2.3	**Foam systems positions of aft monitors** Port and starboard monitors required by this regulation may be located in the cargo area as defined in regulation 2/3.6, provided they are aft of cargo tanks and that they protect below and aft of each other.
14	2.3.3	**Application to tankers** This paragraph applies to all tankers regardless of their size.

FFS Code		Interpretation or reference
Chapter	**Paragraph**	
15	2.3.2.7	**Arrangements for isolation of inert gas supply mains and cargo piping systems** As a guide, the effective isolation required by this paragraph may be achieved by the two arrangements shown in figures 1 and 2 of chapter 15 and paragraph 2.3.2.7 in the Appendix of this circular.

INTERPRETATIONS OF VAGUE EXPRESSIONS, OTHER VAGUE WORDING AND REFERENCES IN THE FIRE TEST PROCEDURE (FTP) CODE AND FIRE TEST PROCEDURES REFERRED TO IN THE CODE

Relevant document	Paragraph	Interpretation or reference
Fire Test Procedure Code		
FTP Code, Approval	5.1.6.5	For cases where an unsuccessful test had been conducted prior to the final approval test, the fire test report should include a description of the modifications made to the test specimen that resulted in the successful test.
FTP Code, Approval	5.2.4	Type approval certificates for windows should state which side of the window was exposed to the heating condition during the test. The certificate should include a reference to optional test(s) such as hose stream test and/or thermo radiation test.
Non-combustibility test		
FTP Code, Annex 1 Part 1	2.1	The test exposure need not exceed a 30-minute duration. For the purposes of this Part, ISO 1182:2002 may be used in lieu of ISO 1182:1990.
Smoke and toxicity test		
FTP Code, Annex 1 Part 2	2.6.2	Not only the FTIR (Fourier Transform Infrared Spectrometer) method but also other methods such as GC/MS (Gas Chromatography/Mass Spectrometer) which can produce traceable results can be used for the gas analysis.
Test for "A", "B", and "F" class divisions including windows, fire dampers, pipe penetrations and cable transits		
FTP Code, Annex 1 Part 3 Resolution A.754(18),	2.1 2.6.2.2	"B" class doors should be fire tested in B class steel bulkheads of dimensions as stated in paragraph 2.4.1 of resolution A.754(18), otherwise approval should be limited to the type of construction in which the door was tested.
FTP Code, Annex 1 Part 3	2.2.1	The minimum bulkhead panel height should be a standard height of the manufactured panel with a dimension of 2.400 mm.
FTP Code, Annex 1 Part 3	3.1	The calcium silicate board described as a dummy specimen specified in paragraph 3.3 of resolution A.653(16) should be used as a standard substrate for adhesives.
FTP Code, Annex 1 Part 3	4.1	Sealing materials used in penetration systems for "A" class divisions are not required to meet non-combustibility criteria provided that all other applicable requirements of FTP Code, part 3, are met.
Resolution A. 754(18)	1.2	The thickness of insulation on the stiffeners need not be same as that of the steel plate.

Relevant document	Paragraph	Interpretation or reference
Resolution A.754(18)	1.6	Doors, windows and other division penetrations intended to be installed in fire divisions made of material other than steel should correspond to prototype(s) tested on a division made of such material, unless the Administration is satisfied that the construction, as approved, does not impair the fire resistance of the division regardless of the division construction.
Resolution A.754(18)	1.7	"B" class constructions should be tested without finishes. For constructions where this is not possible, finishes should be included in the non-combustibility test of the construction.
Resolution A.754(18)	2.8.2	Where testing is conducted on a perforated ceiling system, equally constructed non-perforated ceilings and ceilings with a lesser degree of perforations (in terms of size, shape, and perforations per unit area) may be approved without further testing.
Resolution A.754(18)	9	There exist no expectations that "A" and "B" class fire doors remain functional, in the ability to be opened/closed, during or after the specified test duration.
Resolution A.754(18), Appendix A.I Windows	2.1	The test should be conducted on a window of the maximum size (in terms of both the height and the width) and the type of the glass pane and/or the minimum thickness of the glass pane or panes and gaps, if appropriate, for which approval is sought. Test results obtained on this configuration should, by analogy, allow approval of windows of the same type, with lesser dimensions in terms of height and width and with the same or greater thickness.
Resolution A.754(18), Appendix A.I Windows	5.3	The window should be considered to have failed the hose-stream test if an opening develops that allows an observable projection of water from the stream beyond the unexposed surface during the hose stream test. Gap gauges need not be applied during or after the hose stream test.
Resolution A.754(18), Appendix A.II Fire dampers	2.2.4	The distance between the fire damper and the structural core specified in paragraph 2.2.4 means the distance between the fire damper centre and the structural core.
Resolution A.754(18), Appendix A.II Fire dampers	4	If evaluation of insulation is required, it should prevent a temperature rise at any point on the surface not exceeding 180°C above the initial temperature. The average temperature rise is not relevant.
Resolution A.754(18), Appendix A.III Pipe and duct penetrations	4.1	Penetrations and transits should meet both integrity and insulation criteria.
Resolution A.754(18), Appendix A.IV Cable transits	4.1	Penetrations and transits should meet both integrity and insulation criteria**.**
Test for surface flammability		
FTP Code, Annex 1 Part 5	1	Where a product is approved based on a test of a specimen applied on a non-combustible substrate, that product should be approved for application to any non-combustible substrate with similar or higher density (similar density may be defined as a density ≥ 0.75 x the density used during testing) or with a greater thickness if the density is more than 400 kg/m^3. Where a product is approved on

Relevant document	Paragraph	Interpretation or reference
		the basis of a test result obtained after application on a metallic substrate (e.g. thin film of paints or plastic films on steel plates), such a product should be approved for application to any metallic base of similar or higher thickness (similar thickness is obtained as a thickness ≥ 0.75 x the thickness of metallic substrate used during testing).
Resolution A.653(16)	7	Where a product is approved based on a test of a specimen applied on a non-combustible substrate, that product should be approved for application to any non-combustible substrate with similar or higher density (similar density may be defined as a density ≥ 0.75 x the density used during testing) or with a greater thickness if the density is more than 400 kg/m^3. Where a product is approved on the basis of a test result obtained after application on a metallic substrate (e.g. thin film of paints or plastic films on steel plates), such a product should be approved for application to any metallic base of similar or higher thickness (similar thickness is obtained as a thickness ≥ 0.75 x the thickness of metallic substrate used during testing).
Resolution A.653(16)	7.3	Vapour barriers used in conjunction with insulation should be tested without any other components of “A” or “B” class constructions that will shield the barrier being tested from the radiant panel.
Resolution A.653(16)	8.3.1	In the first line of the first sentence, the word “or” should read “of”".
Resolution A.653(16)	10	The sentence should be understood to mean: “Materials giving average values for all of the surface flammability criteria as listed in the following table ... (etc.)." Q_{sb} means an average of three values of average heat for sustained burning, as defined in paragraph 9.3.
Test for primary deck coverings		
FTP Code, Annex 1 Part 6	2.1	For the purpose of this part, the total heat release value (Q_t) for floor coverings given in section 10 of the annex to resolution A.653(16) is replaced by ≤ 2.0 MJ.
FTP Code, Annex 1 Part 6	2.2	Fire test procedure The test may be terminated after 40 min.

APPENDIX

EXPLANATORY SKETCHES

This appendix contains explanatory sketches to some interpretations of regulations in chapter II-2 of the 1974 SOLAS Convention, as amended, and interpretations of paragraphs in the Fire Safety Systems Code as follows:

SOLAS Chapter II-2

Regulation 4.5.1:	Corner-to-corner situation in a cofferdam (figure)
Regulation 5.3 and 6.2:	Materials used on passenger ships for bulkheads of accommodation spaces as defined in regulation II-2/3.1 (table)
Regulation 5.3 and 6.2:	Materials used in accommodation spaces, as defined in regulation II-2/3.1, of cargo ships (table)
Regulation 9.2.2.1:	Arrangement of main vertical zones (figures 1 to 4)
Regulation 9.2.3.4.1:	Construction of protected stairway enclosures of cargo ships (figures 1, 2.1 and 2.2)
Regulation 9.3.4:	Prevention of heat transmission by insulation and structural details for drainage (figures 1, 2 and 3)
Regulation 10.5:	Number of systems, appliances and extinguishers in machinery spaces
Regulation 13.3.2.4.1:	Continuous fire shelter of means of escape (figure)

Fire Safety Systems Code

Chapter 15 paragraph 2.3.2.7:	Isolation arrangements in inert gas main (figures 1 and 2)

Regulation 4.5.1: Corner-to-corner situation in a cofferdam

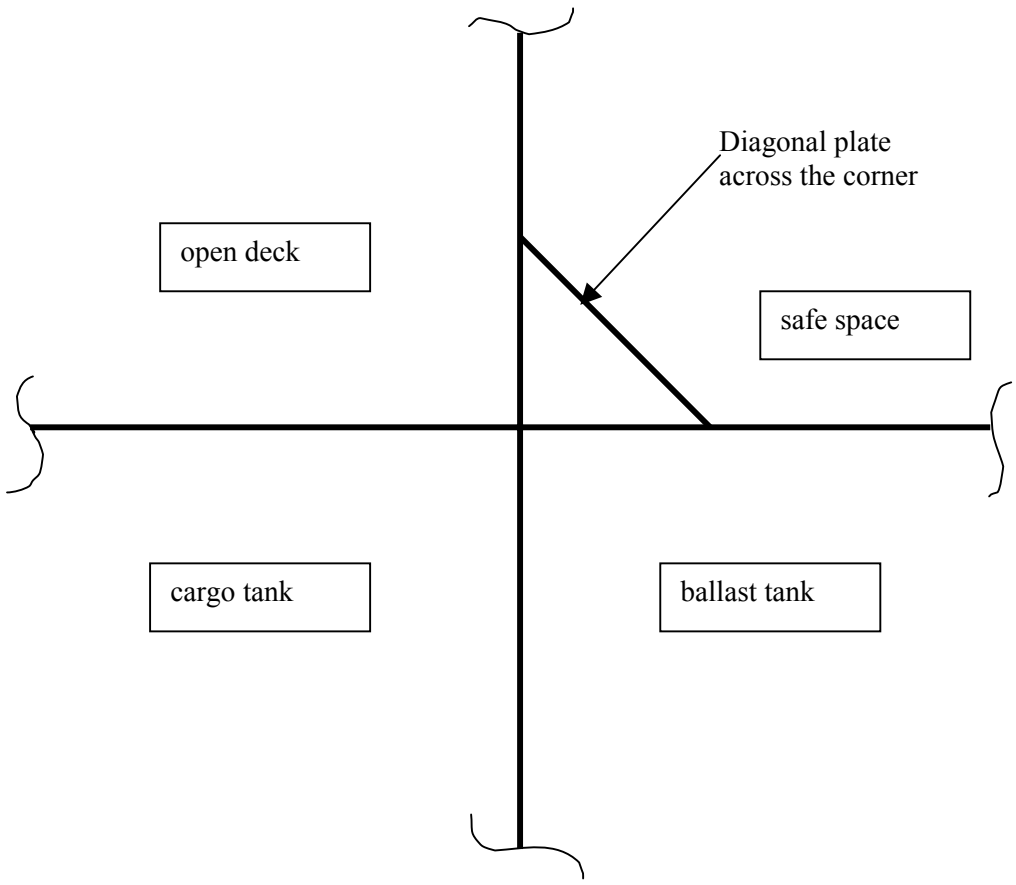

Regulations 5.3 and 6.2: Materials used on passenger ships for bulkheads of accommodation spaces as defined in regulation II-2/3.1

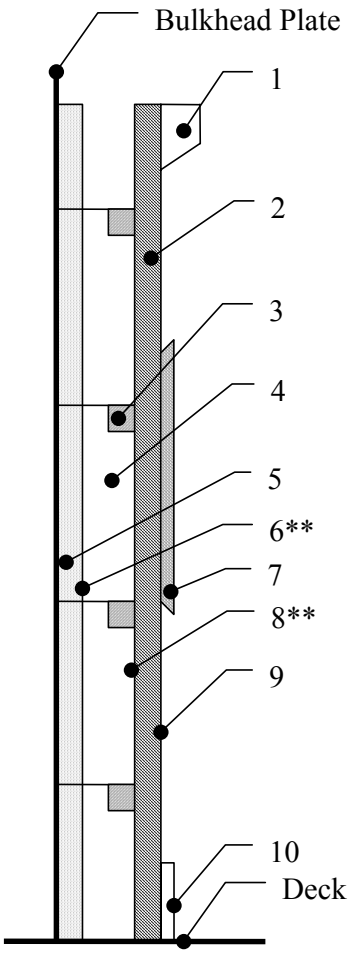

Materials used for bulkheads of accommodation spaces as defined in Reg. II-2/3.1					
Bulkhead components	Requirements in SOLAS chapter II-2 for components				
	Non-combustible material (5.3.1.1) (5.3.1.2.1)	Calorific value (5.3.2.2)	Equivalent volume (5.3.2.3)	Low flame spread (5.3.2.4)*	Smoke production, *toxic products* (6.2)
	(A)	(B)	(C)	(D)	(E)
1 moulding			X		
2 wall panel (lining)	X				
3 grounds and supports	X				
4 draft stops	X				
5 insulation	X				
6 insulation surface**				X (5.3.2.4.1.2)	
7 decoration			X		
8 painted surface** or fabric or veneer**		-- X		X (5.3.2.4.1.2) X (5.3.2.4.1.2)	
9 painted surface or fabric or veneer		-- X	X X	X (5.3.2.4.1.1) X (5.3.2.4.1.1)	X X
10 skirting board			X		

NOTES:

* Exposed surfaces of corridors and stairway enclosures referred to in regulation II-2/5.3.2.4.1.1 includes floor coverings.

** Where the wall panel is an integral part of the fire insulation in accordance with regulation II-2/9.2.2.3.3, these components are to be of non-combustible material.

Regulations 5.3 and 6.2: Materials used in accommodation spaces, as defined in regulation II-2/3.1, of cargo ships

Method IC

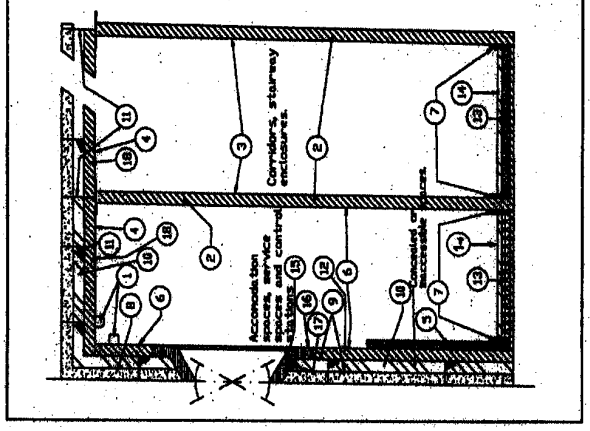

		Requirements for components						
		A Non Combustible Material Reg.II-2/5.3.1.2.2.1	B Non Combustible Material Reg.II-2/5.3.1.1	C Low flame spread Reg.II-2/5.3.2.4.2	D Equivalent volume Reg.II-2/5.3.2.3.1	E Calorific value Reg.II-2/5.3.2.2	F Smoke production Reg.II-2/6.2	G Not readily ignite Reg.II-2/6.3
1	Moulding				X	X	X (2)	
2	Panel	X			X	X	X (2)	
3	Painted surfaces or Veneer or Fabric or Foils			X	X	X	X	
4	Painted surfaces or Veneer or Fabric or Foils			X	X	X	X (2)	
5	Decoration				X		X	
6	Painted surfaces or Veneer or Fabric or Foils				X	X	X (2)	
7	Skirting board				X			
8	Insulation		X (1)					
9	Surfaces and paints in concealed or inaccessible			X				
10	Draught stop	X						
11	Grounds and supports	X		X				
12	Lining	X						
13	Primary deck covering 1st layer						X	X
14	Floor finishing			X (3)			X	
15	Window box	X						
16	Window box surface			X	X	X	X	
17	Window box surface in concealed or inaccessible			X				
18	Ceiling panel	X						

(1) Vapour barriers used on pipes for cold services (see interpretation to regulationII-2/5.3.1.1) may be of combustible materials providing that their surface has low flame spread characteristics (Reg. II-2/5.3.1.1
(2) Applicable to paints, varnishes and other finishes (Reg. II-2/6.2)
(3) Only in corridors and stairway enclosures

Method IIC - IIIC

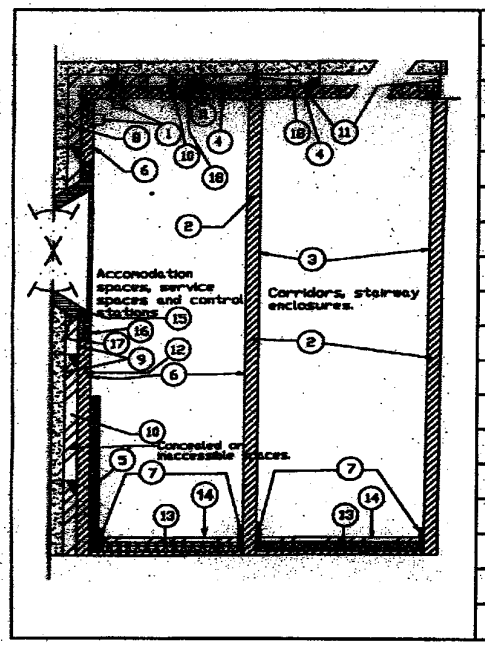

		Requirements for components						
		A Non Combustible Material Reg.II-2/5.3.1.2.2.2	B Non Combustible Material Reg.II-2/5.3.1.1	C Low flame spread Reg.II-2/5.3.2.4.2	D Equivalent volume Reg.II-2/5.3.2.3.1	E Calorific value Reg.II-2/5.3.2.2	F Smoke production Reg.II-2/6.2	G Not readily ignite Reg.II-2/6.3
1	Moulding				X (3)			
2	Panel	X (4)						
3	Painted surfaces or Veneer or Fabric or Foils			X	X	X	X (5)	
4	Painted surfaces or Veneer or Fabric or Foils			X	X (3)	X (2)	X (5)	
5	Decoration				X (3)		X	
6	Painted surfaces or Veneer or Fabric or Foils				X (3)	X (2)	X (5)	
7	Skirting board				X (3)			
8	Insulation		X (1)					
9	Surfaces and paints in concealed or inaccessible			X				
10	Draught stop	X (4)						
11	Grounds and supports	X (4)		X				
12	Lining	X (4)						
13	Primary deck covering 1st layer						X	X
14	Floor finishing			X (6)			X	
15	Window box	X (4)						
16	Window box surface			X (3)	X (3)	X (2)	X	
17	Window box surface in concealed or inaccessible			X				
18	Ceiling panel	X (4)						

(1) Vapour barriers used on pipes for cold services (see interpretation to regulation II-2/5.3.1.1) may be of combustible materials providing that their surface has low flame spread characteristics (Reg. II-2/5.3.1.1)
(2) Where the material is fitted on non combustible bulkheads, ceiling and lining in accommodation and service spaces (Reg.II-2/5.3.2.2)
(3) To be applied to those accommodation and service spaces bounded by non combustible bulkheads, ceiling and linings (Reg.II-2/5.3.2.3.1)
(4) Only in corridors and stairway enclosures serving accommodation and service spaces and control stations (Reg. II-2/5.3.1.2.2.2)
(5) Applicable to paints, varnishes and other finishes (Reg. II-2/6.2)
(6) Only in corridors and stairway enclosures

Regulation 9.2.2.1: Arrangement of main vertical zones*

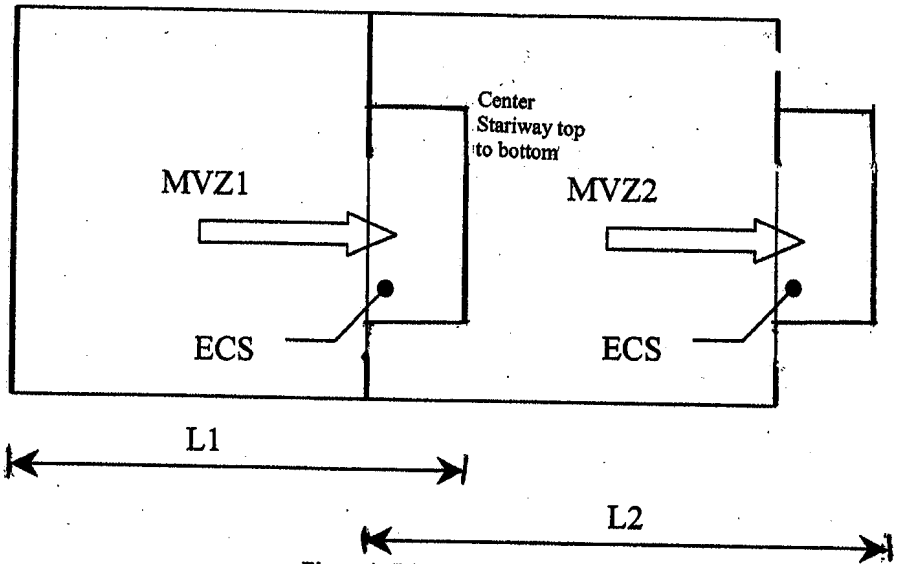

Figure 1: ECS serves one MVZ

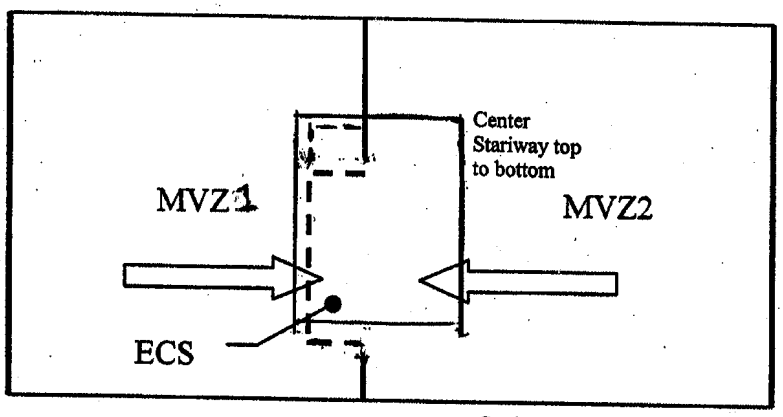

Option to reverse boundaries

Option 1: ECS belongs to MVZ1

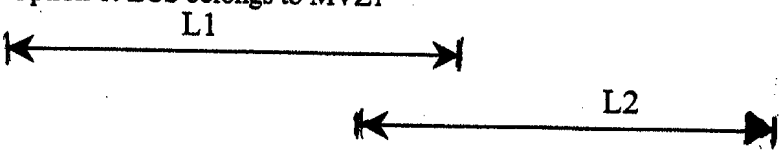

Option 2: ECS belongs to MVZ2

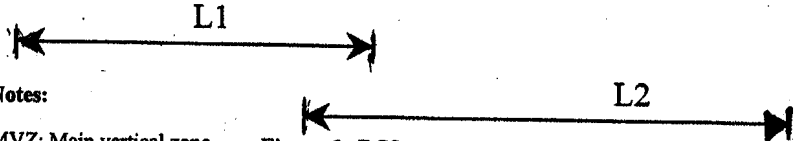

Figure 2: ECS serves two MVZ's

Notes:

*MVZ: Main vertical zone
ECS : ESCAPE Stairway
⇨ : Direction of escape

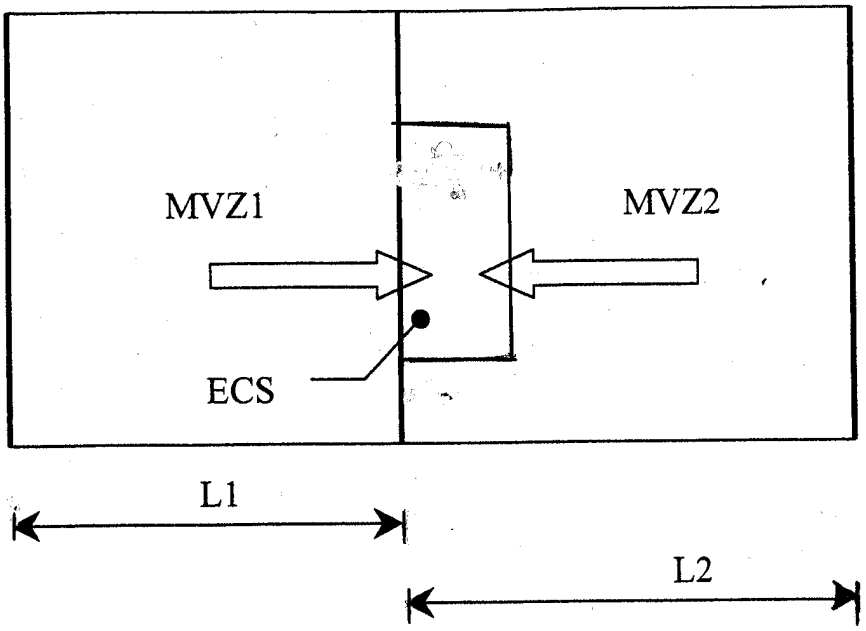

Figure 3: ECS serves two MVZ's (ECS belongs to MVZ2)

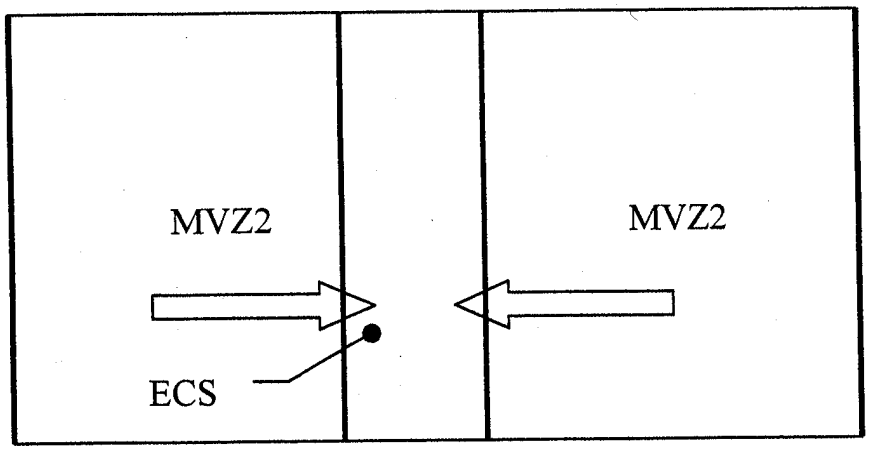

Option 1: ECS belongs to MVZ1

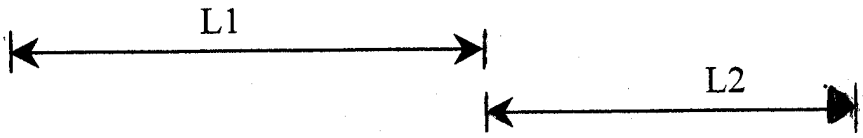

Option 2: ECS should be treated as MVZ

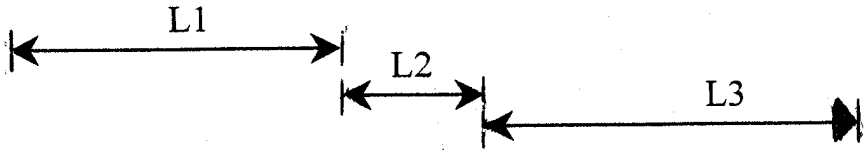

Figure 4: ECS serves two MVZ's

Regulation 9.2.3.4.1: Construction of protected stairways of cargo ships

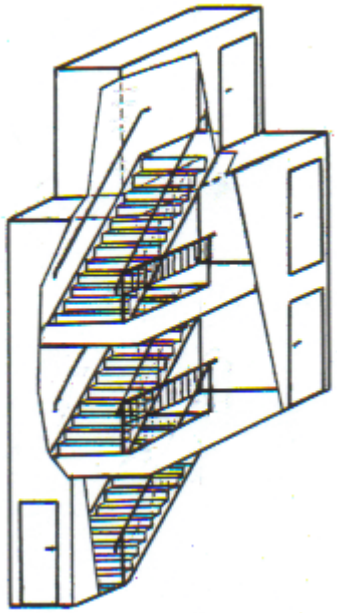

Fig. 1

staircase well with going round entrances on each deck level, self-closing doors

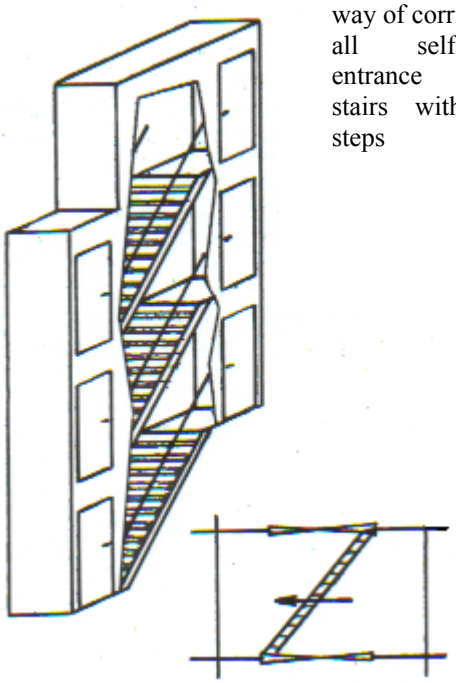

Fig. 2.1

staircase well - going round by way of corridor all self-closing entrance doors, stairs with open steps

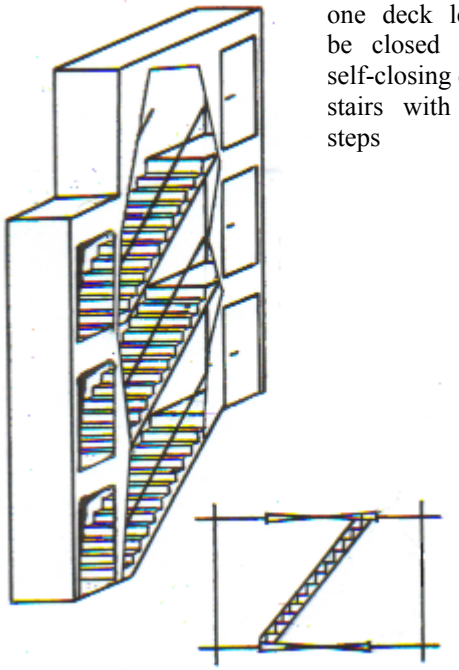

Fig. 2.2

each stairway on one deck level to be closed with a self-closing door, stairs with closed steps

Regulation 9.3.4: Prevention of heat transmission by insulation and structural details for drainage*

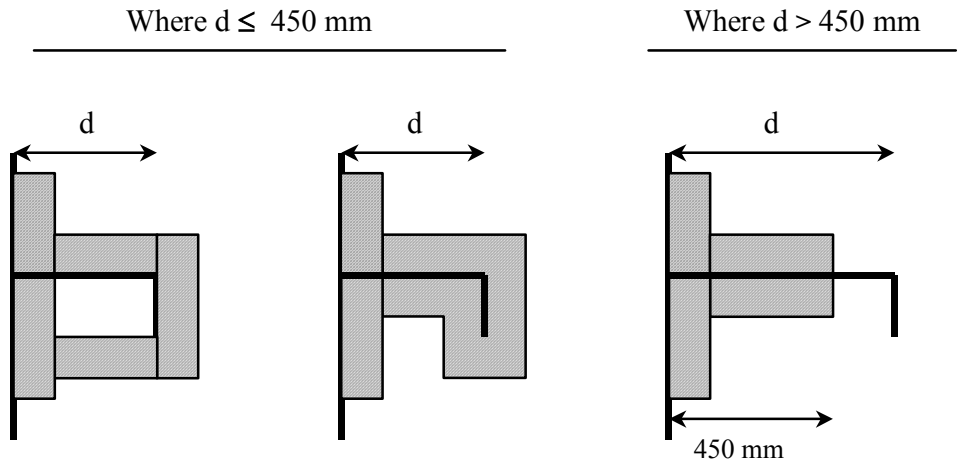

Fig. 1

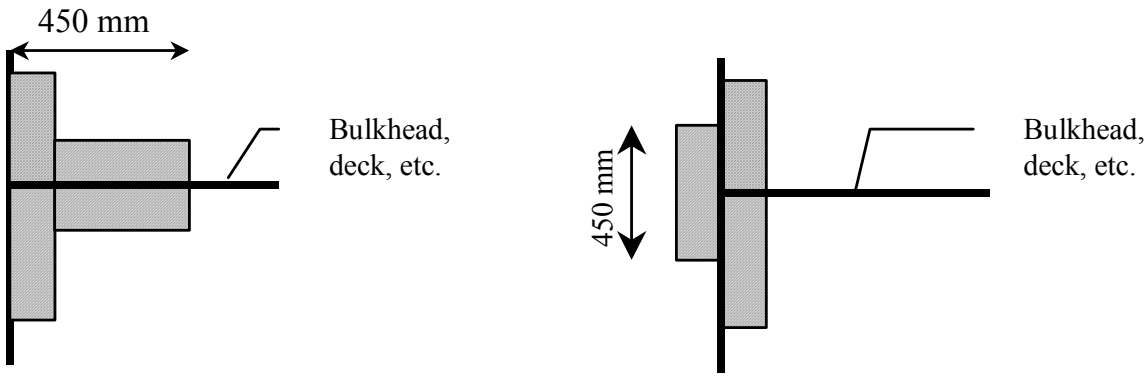

Fig. 2

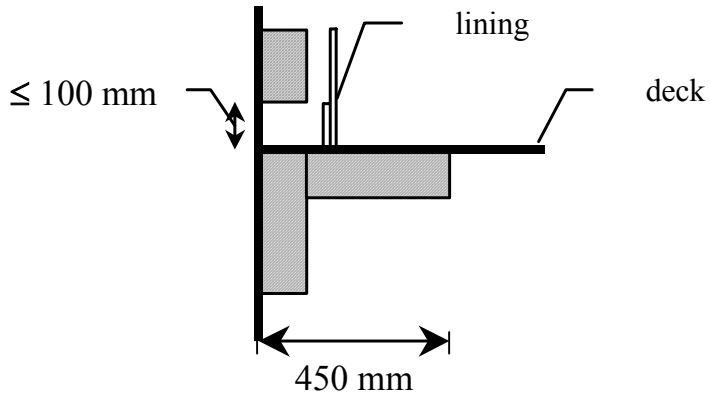

Fig. 3

***Note:**
d = Depth of stiffener on girder.

Regulation 10.5: Number of systems, appliances, and extinguishers required in machinery spaces

Systems appliances & extinguishers → **Category A Machinery spaces ↓**	**Fixed fire extinguishing system**	**Portable foam applicator** *1	**Portable foam extinguishers**	**Add'l Portable foam extinguishers**	**135 *l* foam extinguisher**	**45 *l* foam extinguishers** *2	**Sand boxes** *3
SOLAS paragraph →	10.5.1.1, 10.5.2.1	10.5.1.2.1 10.5.2.2.1	10.5.1.2.2	10.5.2.2.2	10.5.1.2.2	10.5.2.2.2	10.5.2.2.2
Oil-fired boilers	1	1	2N	NA	1*4	-	N
Oil-fired boilers and oil fuel units	1	1	2N+2	NA	1*4	-	N
Engine room containing:							
Oil fuel units only	1	-	2	NA	-	-	-
Internal combustion machinery	1	1	x		-	y	-
Internal combustion machinery and oil fuel units	1	1	x		-	y	-
Combined engine/boiler room containing:							
Internal combustion machinery, oil fired boilers and oil fuel units	1	1	(2N+2) or x whichever is greater		1*4	y*5	N

N = number of firing spaces.
"2N" means that two extinguishers are to be located in each firing space.
X = sufficient number, minimum two in each space, so located that there are at least one portable fire extinguisher within 10 m walking distance from any point.
y = sufficient number to enable foam to be directed onto any part of the fuel lubricating oil pressure systems, gearing and other fire hazard.

Notes:

*1. May be located at outside of the entrance to the room.
*2. May be arranged outside of the space concerned for smaller spaces of cargo ships.
*3. The amount of sand is to be at least 0.1 m^3.
*4. Not required for such spaces in cargo ships wherein all boilers contained therein are for domestic services and are less than 175kW.
*5. In case of machinery spaces containing both boilers and internal combustion engines (case not explicitly considered in regulation 10.5) regulation 10.5.1 and 10.5.2 apply, with the exception that one of the foam fire-extinguishers of at least 45 *l* capacity or equivalent (required by regulation 10.5.2.2.2) may be omitted on the condition that the 135 *l* extinguisher (required by regulation 10.5.1.2.2) can protect efficiently and readily the area covered by 45 *l* extinguisher.
*6. Oil fired machinery other than boilers such as fired inert gas generators, incinerators and waste disposal units are to be considered the same as boilers insofar as the required number and type of fire fighting appliances are concerned.

Regulation 13.3.2.4.1: Continuous fire shelter of means of escape

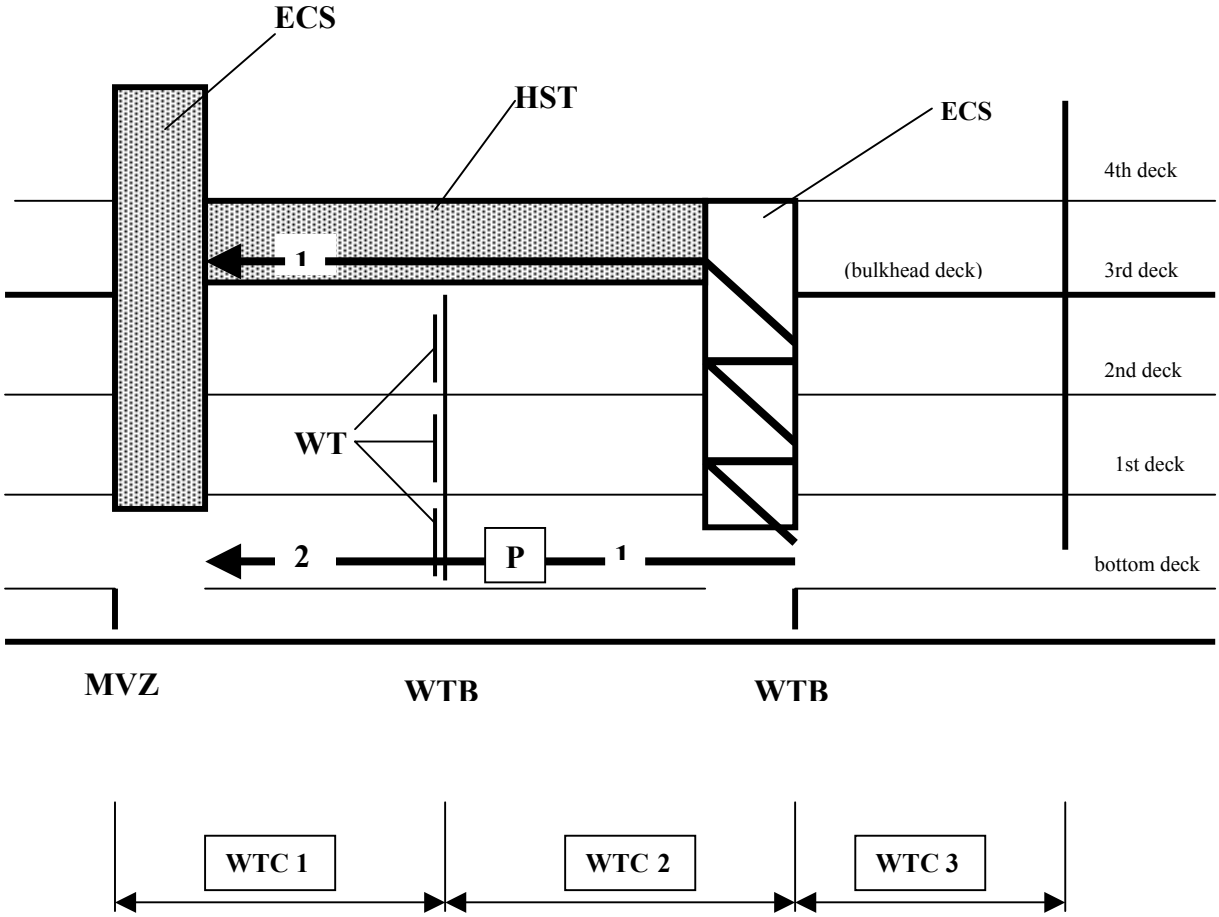

Figure

NOTES:

ECS: stairway enclosed in a continuous fire shelter
HST: "horizontal stairway"; route protected as a category 2 space
MVZ: main vertical zone
WTB: watertight bulkhead
WTC: watertight compartment
WTD: watertight door
P: group of persons

Chapter 15 paragraph 2.3.2.7: Isolation arrangements in inert gas main

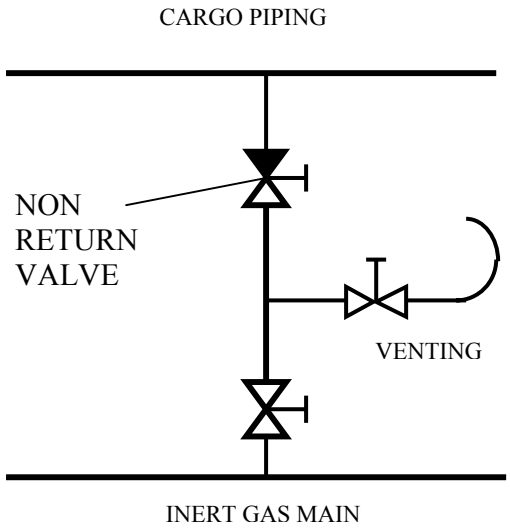

Fig. 1

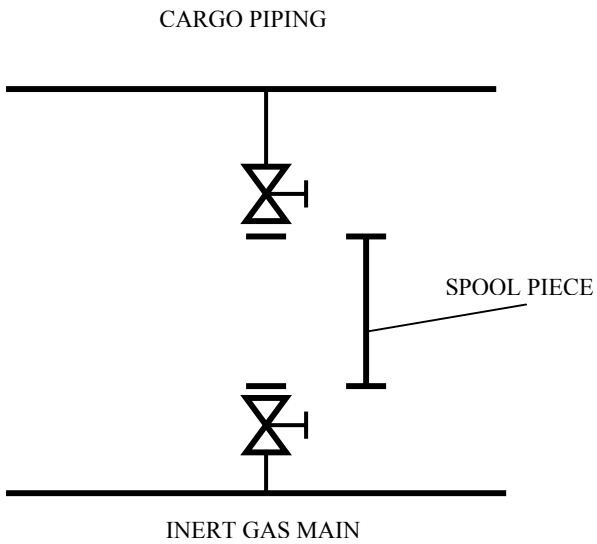

Fig. 2

***

ANNEX 2

DEFINITION FOR "SAFE HAVEN" AND WORK TO BE CARRIED OUT

Definition for the term "safe haven"

1 A safe haven, in the context of a fire casualty, is, from a perspective of habitability, any area outside the main vertical zone(s) in which a fire has occurred such that it can safely accommodate all persons on board to protect them from hazards to life or health and provide basic services as the ship proceeds to port under its own power.

Development of functional requirements

2 The functional requirements for safe havens, when the ship is subjected to the fire scenarios, include the following elements:

.1 criteria for evacuating persons from the MVZs where a fire has occurred;

.2 criteria for determining space necessary for accommodating all persons on board;

.3 provisions for basic services such as food, heat, sanitation, medical services, etc.;

.4 criteria for protection from spread of fire, smoke or damage to the safe haven;

.5 method for determination of time to return to port;

.6 safe access to survival craft in the case where the ship has ultimately to be abandoned; and

.7 provisions to ensure that the ship can safely return to port.

Fire scenarios

3 The fire scenarios to be developed should take into account the following elements: size and location of the fire; duration of fire; type of fire; number of fires; etc.

Performance standard

4 The performance standard to be developed should evaluate and verify that the ship's design can meet the functional requirements for safe havens when subjected to the above fire scenarios.

***

ANNEX 3

ANALYSIS OF TASKS ASSIGNED TO THE SUB-COMMITTEE FOR LARGE PASSENGER SHIP SAFETY

TASK	WORK TO BE UNDERTAKEN	TARGET COMPLETION DATE	GENERAL PARAMETERS
MAIN VERTICAL AND HORIZONTAL ZONE REQUIREMENTS (TASK 2.1)	To review existing requirements for main vertical and horizontal zones boundaries in order to assess if there is a need for enhancing their performance in the light of the "safe haven" concept	Two sessions	Application to ships of sufficient size to support the "safe haven" concept
FIRE BOUNDARY PENETRATION REQUIREMENTS (TASK 2.2)	To determine if existing SOLAS chapter II-2, FTP Code and FSS Code requirements for ventilation ducting penetrations of "A" and "B" class divisions are consistent and provide justification of possible measures to improve their effectiveness	Two sessions	Type of space
MEANS TO KEEP SMOKE AND FIRE FROM SPREADING BEYOND THE SPACE OF ORIGIN, SPECIFICALLY ADDRESSING EMERGENCY RESPONSE BY CREW, SHIPBOARD SAFETY SYSTEMS AND BOUNDARIES (TASK 2.3)	To review ventilation and smoke strategies, taking into account the "safe haven" concept and MSC/Circ.1034 To review existing requirements applicable to multiple deck spaces (atriums, theatres, etc.) To review existing requirements for shops, taking into consideration their categorization ("7" or "8"), fire load, boundaries, access and location	Two sessions	Type of space Time of day (use of space)

TASK	WORK TO BE UNDERTAKEN	TARGET COMPLETION DATE	GENERAL PARAMETERS
MEANS TO LINK PREVENTION AND PROTECTION MEASURES TO THE FIRE RISK OF LAUNDRY AREAS, CARPENTER SHOPS, SOLVENT CLEANING ROOMS AND OTHER SPECIFIC SPACES NOT GENERALLY COVERED BY THE EXISTING GENERAL CATEGORIZATION AND REGULATIONS (TASK 2.4)	To review the existing requirements for detection, suppression, active and passive fire protection main laundries and large storage areas. To determine the suitability of exiting requirements for detection, suppression, active and passive fire protection to those closed or semi-closed spaces such as spaces under retractable roof, restaurants, cooking areas on open decks, etc. which are not specifically addressed in SOLAS chapter II-2	Two sessions	Application to all types of ships Type of products stored Amount of combustible
THE "SAFE HAVEN" CONCEPT AND DEVELOPMENT OF FUNCTIONAL REQUIREMENTS (TASK 2.5)	See paragraph 4.4.3 annex 3	Two sessions	
RAPID MITIGATION STRATEGIES SUCH AS FAST INITIAL RESPONSE MEASURES, AUTOMATION OF FIRE DAMPERS, INTEGRATED SYSTEMS TECHNOLOGIES, ETC. (TASK 2.6)	To develop quick response strategies taking into account equipment such as locally audible alarm and addressable detectors, and industry practices such as fast response capabilities To determine if there is a need for improving the training of parties responsible for safety and the process for fast response capabilities, paying due attention to the advantages of shore-based training and existing basic fire-fighting courses in respect of number of drills	Two sessions	Size of public compartments within a fire zone Number of main vertical zones and decks

TASK	WORK TO BE UNDERTAKEN	TARGET COMPLETION DATE	GENERAL PARAMETERS
MEASURES TO PREVENT FIRE CASUALTIES (TASK 2.7)	To develop requirements applicable to on-board safety centre based on the annex to document MSC 77/4/1 with a view to determining which systems should be controlled and monitored from this position and/or the bridge	Two sessions	Number of main vertical zones and decks
FIRE AND SMOKE PROTECTION FOR MEDICAL FACILITIES (TASK 2.8)	To address the location in different MVZ of primary and secondary medical care facilities in order to meet the "safe haven" concept	Two sessions	Application to ship of sufficient size to support the "safe haven" concept
REVIEW OF SMOKE AND TOXICITY CRITERIA WITH REGARD TO NEW MATERIALS WHICH MAY BE USED (TASK 2.9)	None		
FIRE PROTECTION EQUIPMENT RELIABILITY ISSUES (TASK 2.10)	None		
METHODS TO LINK EVACUATION TIME TO VESSEL'S SURVIVAL TIME INCLUDING USE OF EVACUATION ANALYSIS IN THE DESIGN PROCESS AND SIMPLIFICATION OF ESCAPE ROUTE ARRANGEMENTS (TASK 3.1)	To review and update, where necessary, MSC/Circ.1033 on the basis of any information and data resulting from research and development activities and tests with a view of ensuring uniformity of application and to assess the performance of the ship with regard to benchmark scenarios. Specific considerations should be given to the use of this methodology for the "safe haven" concept	Two sessions	Area of operation Number of main vertical zones and decks Number of decks Type of evacuation system

TASK	WORK TO BE UNDERTAKEN	TARGET COMPLETION DATE	ETERS
CROWD MANAGEMENT ISSUES (TASK 3.2)	To develop functional requirements for auxiliary cabin lighting	Two sessions	Number of persons
PASSENGER AND CREW NOTIFICATION ISSUES (TASK 3.3)	To review present information strategies in order to ascertain whether they are appropriate in the light of the "safe haven" concept. In this respect, proposals contained in document FP 48/4, annex 1, table 1, should be considered	Two sessions	Application to ship of sufficient size to support the "safe haven" concept Number of persons
PASSENGER DEMOGRAPHICS (TASK 3.4)	To be considered in conjunction with tasks 3.1 and 3.2		
PROPERLY ACCOUNTING FOR PERSON DURING AN EMERGENCY (TASK 3.5)	To be considered in conjunction with tasks 3.1 and 3.2		
FAMILIARIZATION OF PASSENGERS WITH THE SHIP (TASK 3.6)	To be considered in conjunction with task 3.3		
THE NUMBER AND LOCATION OF EXTRA LIFE JACKETS WITH ADDITIONAL CONSIDERATION OF PASSENGER DEMOGRAPHICS (TASK 3.7)	None		

TASK	WORK TO BE UNDERTAKEN	TARGET COMPLETION DATE	ETERS
MEASURES TO IMPROVE EVACUATION WHILE ALONGSIDE IN PORT (TASK 3.8)	To be considered in conjunction with task 3.1 To consider the need for guidelines for abandonment of ship alongside in port	Two sessions	Number of persons
MEASURES FOR CHILD SAFETY, FAMILY SEPARATION AND PERSONS WITH SPECIAL NEEDS (TASK 3.9)	To be considered in conjunction with tasks 3.1 and 3.2		
DEVELOP PERFORMANCE STANDARDS (TASK 3.10)	See paragraph 4.4.3 and annex 3	Two sessions	
DEVELOP FIRE SCENARIOS (TASK 3.11)	See paragraph 4.4.3 and annex 3	Two sessions	

***

ANNEX 4

RELEVANT PARTS OF THE DRAFT REVISED FISHING VESSEL SAFETY CODE PREPARED BY THE SUB-COMMITTEE

CHAPTER I

GENERAL PROVISIONS

1.1 Purpose and Scope

1.1.1 The purpose of this part of the Code is to provide information on design, construction, and equipment of fishing vessels with a view to promoting the safety of fishing vessels and safety and health of the crew. The Code is not a substitute for national laws and regulations nor is it a substitute for the provisions of international instruments in relation to safety of fishing vessels and crew although it may serve as a guide to those concerned with framing such national laws and regulations.

1.1.2 The Code is voluntary. It is wider in scope than the Torremolinos Protocol and only the minimum requirements to ensure the safety of fishing vessels and safety and health of the crew are given in this part of the Code for fishing vessels of 24m in length and above. Each competent authority should take every possible measure to promote the safety of the vessels concerned.

1.1.3 Certain sections of this part of the Code make reference to the minimum standards set out in the provisions of the Torremolinos International Convention for the Safety of Fishing Vessels, 1977, as modified by the Torremolinos Protocol of 1993 relating thereto. For the purpose of this part of the Code, these are considered to be the minimum standards acceptable in relation to the classes of vessels, as prescribed in the Protocol, to which they should be applied.

1.1.4 Regional uniform standards or guidelines that have been submitted to IMO as provided for under Article 3, Paragraphs (4) and (5) of the Protocol for fishing vessels registered and operating in such regions, prevail over Chapters IV, V, VII and IX of this part of the Code. For all other fishing vessels of 24 m in length and over but less than 45 m in length, that are registered in such regions but operate, or are intended for operation outside the region, the whole of this part of the Code would serve as a guide.

1.1.5 Unless otherwise stated, the provisions of this part of the Code are intended to apply to new decked fishing vessels of 24 m in length and above and in the following categories:

Category 1 - Vessels intended for fishing operations in unlimited sea areas;

Category 2 - Vessels intended for fishing operations in sea areas up to 200 nautical miles from a place of shelter;

Category 3 - Vessels intended for fishing operations in sea areas up to 50 nautical miles from a place of shelter.

However, even where not otherwise stated, the competent authority should also apply these provisions, as far as reasonable and practicable, to existing decked fishing vessels.

1.1.6 The provisions of this part of the Code do not apply to fishing vessels for sport or recreation or to processing vessels.

1.1.7 Where operating experience has clearly shown that departure from the provisions of this part of the Code is justified, or in applying this part of the Code to any other equivalent area of operation for any vessel covered by this Part of the Code, the competent authority may permit adequate alterations or substitutions thereof.

1.2 Definitions

1.2.1 For the purpose of this part of the Code, unless expressly provided otherwise, the following definitions apply:

(i) *Fishing vessel* - in the following referred to as *vessel* - is a vessel used commercially for catching fish, whales, seals, walrus, or other living resources of the sea.

(ii) *Processing vessel* is a vessel used exclusively for processing fish and other living resources of the sea.

(iii) *Crew* means the skipper and all persons employed or engaged in any capacity on board a vessel on the business of that vessel.

(iv) *Competent authority* is the government of the State whose flag the vessel is entitled to fly.

(v) *New vessel* is a vessel the keel of which is laid, or which is at a similar stage of construction, on or after the date of adoption of the present revision to this Part of the Code.

(vi) *Existing vessel* is a vessel which is not a new vessel.

(vii) *Convention* means the International Convention for the Safety of Life at Sea, 1974.

(viii) *Protocol* means the Torremolinos International Convention for the Safety of Fishing Vessels, 1977, as modified by the Torremolinos Protocol of 1993 relating thereto.

(ix) *Place of shelter* is any naturally or artificially protected area easily accessible to the vessel and which can be used for sheltering the vessel in circumstances which are unfavourable to its safety.

(x) *Length* (L)* is to be taken as 96% on the waterline at 85% of the least depth measured from the keel line, or as the length from the foreside of the stem to the axis of the rudder stock on that waterline, if that be greater. In vessels designed with rake of keel the waterline on which this length is measured is to be parallel to the designed waterline.

* Amendments adopted in 1983.

(xi) The *forward and after perpendiculars* are to be taken at the forward and after ends of the length (L). The forward perpendicular is to be coincident with the foreside of the stem on the waterline on which the length is measured.

(xii) *Breadth* (B)* is the maximum breadth of the vessel, measured amidships to the moulded line of the frame in a vessel with a metal shell and to the outer surface of the hull in a vessel with a shell of any other material.

(xiii) (a) *The moulded depth* is the vertical distance measured from the keel line to the top of the working deck beam at side.

(b) In vessels having rounded gunwales, the moulded depth is to be measured to the point of intersection of the moulded lines of deck and side shell plating, the lines extending as though the gunwale were of angular design.

(c) Where the working deck is stepped and the raised part of the deck extends over the point at which the moulded depth is to be determined, the moulded depth is measured to a line of reference extending from the lower part of the deck along a line parallel with the raised part.

(xiv) The *depth (D)* is the moulded depth amidships.

(xv) *Least depth** is the depth measured from the keel line to the top of the working deck beam at side at the point where a parallel to the keel line is tangent to the deck line. Where the working deck is stepped and the raised part of the deck extends over the point at which the least depth is to be determined, the least depth should be measured to a line of reference extending from the lower part of the deck along a line parallel with the raised part.

(xvi) *Deepest operating waterline* is the waterline related to the maximum permissible operating draft.

(xvii) *Freeboard* (f_{min}) is the actual minimum freeboard and is the distance from the underside of the working deck at the side to a water-line, measured perpendicularly to the water-line, plus the minimum thickness of decking. When the working deck is stepped, the lowest line of the deck and the continuation of that line parallel to the upper part of the deck is to be taken as the working deck.

(xviii) *Amidships* is the mid-length of L.

(xix) *Midship section* is that section of the hull defined by the intersection of the moulded surface of the hull with a vertical plane perpendicular to the water and centreline planes passing through amidships.

(xx) *Keel line** is the line parallel to the slope of keel passing amidships through:

(a) the top of the keel or line of intersection of the inside of shell plating with the keel where a bar keel extends above that line of a vessel with a metal shell;

* Amendments adopted in 1983.

(b) the rabbet lower line of the keel of a vessel with a shell of wood or a composite material; or

(c) the intersection of a fair extension of the outside of the shell contour at the bottom with the centreline of a vessel with a shell of material other than wood and metal.

(xxi) *Baseline* is the horizontal line intersecting at amidships the keel line.

(xxii) *Working deck* is generally the lowest complete deck above the deepest operating waterline from which fishing is undertaken. In vessels fitted with two or more complete decks, the competent authority may accept a lower deck as a working deck provided that that deck is situated above the deepest operating waterline.

(xxiii) *Superstructure* is the decked structure on the working deck extending from side to side of the vessel or with the side plating not being inboard of the shell plating more than 0.04 B.

(xxiv) *Enclosed superstructure* is a superstructure with:

(a) enclosing bulkheads of efficient construction;

(b) access openings, if any, in those bulkheads fitted with permanently attached weathertight doors of a strength equivalent to the unpierced structure which can be operated from each side; and

(c) other openings in sides or ends of the superstructure fitted with efficient weathertight means of closing.

A raised quarter-deck is regarded as a superstructure.

A bridge or poop should not be regarded as enclosed unless access is provided for the crew to reach machinery and other working spaces inside those superstructures by alternative means which are available at all times when bulkhead openings are closed.

(xxv) *Superstructure deck* is that complete or partial deck or the top of a superstructure, deckhouse or other erections situated at a height of not less than 1.8 m above the working deck. Where this height is less that 1.8 m, the top of such deckhouses or other erections should be treated in the same way as the working deck.

(xxvi) *Height of a superstructure or other erection is* the least vertical distance measured at side from the top of the deck beams of a superstructure or an erection to the top of the working deck beams.

(xxvii) *Weather deck is* the uppermost deck exposed to weather and sea. Where the deck is not continuous the uppermost deck at the point in question should be taken as the weather deck.

(xxviii) *Weathertight* means that in any sea conditions water will not penetrate into the vessel.

(xxix) *Watertight* means capable of preventing the passage of water through the structure in any direction under a head of water for which the surrounding structure is designed.

(xxx) *Collision bulkhead* is a watertight bulkhead up to the working deck in the forepart of the vessel which meets the following conditions:

(a) The bulkhead is to be located at a distance from the forward perpendicular:

(i) not less than 0.05 L and not more than 0.08 L for vessels of 45 m and over;

(ii) not less than 0.05 L and not more than 0.05 L plus 1.35 m for vessels less than 45 m in length except as may be allowed by the competent authority; and

(iii) in no case less than 2.0 m.

(b) Where any part of the underwater body extends forward of the forward perpendicular, e.g. a bulbous bow, the distance stipulated in subparagraph (a) is to be measured from a point at mid-length of the extension forward of the forward perpendicular or from a point 0.015 L forward of the forward perpendicular, whichever is less.

(c) The bulkhead may have steps or recesses provided they are within the limits prescribed in subparagraph (a).

(xxxi) *Bow height*, defined as the vertical distance at the forward perpendicular between the waterline corresponding to the maximum permissible operating draught and the designed trim and the top of the exposed deck at side.

(xxxii) *Organization* means the International Maritime Organization*.

(xxxiii) *Approved* means approved by the competent authority.

1.2.2 In this Part of the Code measurements are given in the metric system using the following abbreviations:

m	-	metre
cm	-	centimetre
mm	-	millimetre
t	-	tonne (1,000 kg)
kg	-	kilogram
mt	-	metre - tonne
º C	-	degree centigrade
sec	-	second
N	-	Newton
KW	-	Kilowatt kN∗m/sec

* Drawn from Article 2 of the 1993 Torremolinos Protocol

1.3 Surveys

1.3.1 The hull, machinery, equipment, and radio installations should be surveyed on completion and thereafter in such manner and at such intervals as the competent authority or a classification society recognized by the competent authority may consider necessary in order to ensure that their condition is in all respects satisfactory. The surveys should be such as to ensure that the arrangements, material, and scantlings of the structure, boilers and other pressure vessels and their appurtenances, main and auxiliary machinery, electrical installations as well as crew accommodation and other equipment are in all respects satisfactory for the service for which the vessel is intended.

1.3.2 After any survey has been completed, no change should be made in the structural arrangements, machinery, equipment, etc., covered by the survey, without the sanction of the competent authority.

1.3.3 A fishing vessel should carry on board documentation relating to the safety of the vessel issued by the competent authority.

1.3.4 Documentation relating to the safety of the vessel should cease to be valid upon transfer of the vessel to the flag of another State. New safety documentation should only be issued when the competent authority is fully satisfied that the vessel is in compliance with the requirements of the relevant provisions.

1.4 Equivalents

Where the present provisions require that a particular fitting, material, appliance or apparatus, or type thereof, should be fitted or carried in a vessel, or that any particular provision should be made, the competent authority may allow any other fitting, material, appliance or apparatus, or type thereof, to be fitted or carried, or any other provision to be made in that vessel, if it is satisfied by trial thereof or otherwise that such fitting, material, appliance or apparatus, or type thereof, or provision, is at least as effective as that required by the present provisions. Documentation approved by the competent authority to the effect that the alternative structures, measures and appliances meet national regulations should be available on board a vessel.

CHAPTER IV

MACHINERY AND ELECTRICAL INSTALLATIONS AND PERIODICALLY UNATTENDED MACHINERY SPACES

PART D - PERIODICALLY UNATTENDED MACHINERY SPACES

4.19 Fire safety

Fire prevention

4.19.1 Special consideration should be given to high-pressure fuel oil pipes. Where practicable, leakages from such piping systems should be collected in a suitable drain tank, which should be provided with a high level alarm.

4.19.2 Where daily service fuel oil tanks are filled automatically or by remote control, means should be provided to prevent overflow spillages. Similar consideration should be given to other equipment which treats flammable liquids automatically, e.g. fuel oil purifier, which, whenever practicable, should be installed in a special space reserved for purifiers and their heaters.

4.19.3 Where fuel oil daily service tanks or settling tanks are fitted with heating arrangements, a high temperature alarm should be provided if the flashpoint of the fuel oil can be exceeded.

Fire detection

4.19.4 An approved fire detection system based on a self monitoring principle and including facilities for periodical testing should be installed in machinery spaces.

4.19.5 The detection system should initiate both audible and visual alarm in the wheelhouse and in sufficient appropriate spaces to be heard and observed by persons on board, when the vessel is in harbour.

4.19.6 The fire detection system should be fed automatically from an emergency source of power if the main source of power fails.

4.19.7 Internal combustion engines of 2,500 kW and over should be provided with crankcase oil mist detectors or engine bearing temperature detectors or equivalent devices.

Fire fighting

4.19.8 A fixed fire-extinguishing system should be provided to the satisfaction of the competent authority, which should be in compliance with the requirements of 5.22 , 5.40 and 5.57.

4.19.9 In vessels of 75 m in length and over provisions should be made for immediate water delivery from the fire main system either by:

(a) remote starting arrangements of one of the main fire pumps in the wheelhouse and the fire control station, if any; or

(b) permanent pressurization of the fire main system, due regard being paid to the possibility of freezing.*

* See the Guidance for Precautions Against Freezing of Fire Mains contained in recommendation 6 of attachment 3 to the Final Act of the 1993 Torremolinos Conference.

4.19.10 The competent authority should be satisfied with the maintenance of the fire integrity of the machinery spaces, the location and centralization of the fire-extinguishing system controls, the shut-down arrangements, (e.g. ventilation, fuel pumps, etc.,) and may require fire-extinguishing appliances and other firefighting equipment and breathing apparatus in addition to the relevant requirements of chapter V.

CHAPTER V

FIRE PROTECTION, FIRE DETECTION, FIRE EXTINCTION, AND FIRE FIGHTING

PART A - GENERAL FIRE PROTECTION PROVISIONS

5.1 General

One of the following methods of protection should be adopted in accommodation and service spaces:

(a) Method IF - The construction of all internal divisional bulkheads of non-combustible "B" or "C" Class divisions generally without the installation of a detection or sprinkler system in the accommodation and service spaces; or

(b) Method IIF - The fitting of an automatic sprinkler and fire alarm system for the detection and extinction of fire in all spaces in which fire might be expected to originate, generally with no restriction on the type of internal divisional bulkheads; or

(c) Method IIIF - The fitting of an automatic fire alarm and detection system in all spaces in which a fire might be expected to originate, generally with no restriction on the type of internal divisional bulkheads, except that in no case should the area of any accommodation space or spaces bounded by an "A" or "B" Class division exceed 50 m^2. However, the competent authority could increase this area for public spaces The recommendations for the use of non-combustible materials in construction and insulation for the boundary bulkheads of machinery spaces, control stations, etc. and the protection of stairway enclosures and corridors should be common to all three methods.

5.2 Definitions

5.2.1 "Non-combustible material" means a material, which neither burns nor gives off flammable vapours in sufficient quantity for self-ignition when heated to approximately 750ºC, this being determined in accordance with the Fire Test Procedures Code. Any other material is a combustible material.

5.2.2 "A standard fire test" is one in which specimens of the relevant bulkheads or decks are exposed in a test furnace to temperatures corresponding approximately to the standard time-temperature curve specified in the Fire Test Procedures Code.

5.2.3 ""A" class divisions" are those divisions formed by bulkheads and decks, which comply with the following:

(a) they should be constructed of steel or other equivalent material;

(b) they should be suitably stiffened;

(c) they should be so constructed as to be capable of preventing the passage of smoke and flame to the end of the one-hour standard fire test; and

(d) they should be insulated with approved non-combustible materials such that the average temperature of the unexposed side will not rise more than 140ºC above the original temperature, nor will the temperature, at any one point, including any joint, rise more than 180ºC above the original temperature, within the time listed below:

Class "A-60" 60 min
Class "A-30" 30 min
Class "A-15" 15 min
Class "A-0" 0 min

The competent authority may require a test of a prototype bulkhead or deck to ensure that it meets the above requirements for integrity and temperature rise in accordance with the Fire Test Procedures Code.

5.2.4 ""B" class divisions" are those divisions formed by bulkheads, decks, ceilings, or linings, which comply with the following:

(a) they should be so constructed as to be capable of preventing the passage of flame to the end of the first one-half hour of the standard fire test,

(b) they should have an insulation value such that the average temperature of the unexposed side will not rise more than 140ºC above the original temperature, nor will the temperature at any one point, including any joint, rise more than 225ºC above the original temperature, within the time listed below:

Class "B-15" 15 min
Class "B-0" 0 min,

(c) they should be constructed of approved non-combustible materials and all materials entering into the construction and erection of "B" class divisions should be non-combustible with the exception that combustible veneers could be permitted provided they meet the relevant recommendations of this chapter.

The competent authority may require a test of a prototype division to ensure that it meets the above requirements for integrity and temperature rise in accordance with the Fire Test Procedures Code.

5.2.5 ""C" class divisions" are those divisions constructed of approved non-combustible materials. They do not need to meet requirements relative to the passage of smoke and flame nor the limiting of temperature rise. Combustible veneers could be used provided they meet other requirements of this chapter.

5.2.6 ""F" class divisions" are those divisions formed by bulkheads, decks, ceilings or linings which comply with the following:

(a) they should be so constructed as to be capable of preventing the passage of flame to the end of the first one-half hour of the standard fire test; and

(b) they should have an insulation value such that the average temperature of the unexposed side will not rise more than 140ºC above the original temperature, nor will the temperature at any one point, including any joint, rise more than 225ºC above the original temperature, up to the end of the first one-half hour of the standard fire test.

The competent authority may require a test of a prototype division to ensure that it meets the above requirements for integrity and temperature rise in accordance with the Fire Test Procedures Code.

5.2.7 "Continuous "B" class ceilings or linings" are those "B" class ceilings or linings, which terminate only at an "A" or "B" class division.

5.2.8 "Steel or other equivalent material" means steel or any material which, by itself or due to insulation provided, has structural and integrity properties equivalent to steel at the end of the applicable fire exposure to the standard fire test (e.g. aluminium alloy with appropriate insulation).

5.2.9 "Low flame-spread" means that the surface thus described will adequately restrict the spread of flame, to the satisfaction of the competent authority by an established test procedure.*

5.2.10 "Accommodation spaces" are those spaces used for public spaces, corridors, lavatories, cabins, offices, hospitals, cinemas, games and hobbies rooms and pantries containing no cooking appliances and similar spaces.

5.2.11 "Public spaces" are those portions of the accommodation spaces, which are used for halls, dining rooms, lounges, and similar permanently enclosed spaces.

5.2.12 "Service spaces" are those spaces used for galleys, pantries containing cooking appliances, lockers and store-rooms, workshops other than those forming part of the machinery spaces and similar spaces and trunks to such spaces.

5.2.13 "Control stations" are those spaces in which the vessel's radio or main navigation equipment or the emergency source of power is located, or where the fire recording or fire control equipment is centralized.

5.2.14 "Machinery spaces of category A" are those spaces and trunks to such spaces, which contain internal combustion type machinery, used either:

(a) for main propulsion; or

(b) for other purposes where such machinery has in the aggregate a total power output of not less than 750kW;

(c) or which contain any oil-fired boiler or fuel oil unit.

* Refer to the recommendation on improved fire test procedures for flammability of bulkheads, ceilings and deck finish materials adopted by resolution A.653(16).

5.2.15 "Machinery spaces" are those machinery spaces of category A and all other spaces containing propulsion machinery, boilers, fuel oil units, steam and internal combustion engines, generators, steering gear, major electrical machinery, oil filling stations, refrigerating, stabilizing, ventilating and air conditioning machinery and similar spaces, and trunks to such spaces.

5.2.16 *Fire Test Procedures Code* means the International Code for Application of Fire Test Procedures adopted by the Maritime Safety Committee of IMO by resolution MSC.61(67), as may be amended by IMO.

5.2.17 *Fire Safety Systems Code* means the International Code for Fire Safety Systems adopted by the Maritime Safety Committee of IMO by resolution MSC.98(73), as may be amended by IMO.

PART B - FIRE SAFETY MEASURES IN VESSELS OF A LENGTH OF 60 M AND ABOVE

5.3 Structure

5.3.1 The hull, superstructure, structural bulkheads, decks and deckhouses should be constructed of steel or other equivalent material except as otherwise specified in 5.3.4.

5.3.2 The insulation of aluminium alloy components of "A" or "B" Class divisions, except structures which, in the opinion of the competent authority, are non-load-bearing, should be such that the temperature of the structural core does not rise more than 200ºC above the ambient temperature at any time during the applicable fire exposure to the standard fire test.

5.3.3 Special attention should be given to the insulation of aluminium alloy components of columns, stanchions and other structural members required to support survival craft stowage, launching and embarkation areas, and "A" and "B" Class divisions, to ensure:

(a) that for such members supporting survival craft areas and "A" Class divisions the temperature rise limitation specified in 5.3.2 should apply at the end of one hour; and

(b) that for such members required to support "B" Class divisions, the temperature rise limitation specified in 5.3.2 should apply at the end of one half-hour.

5.3.4 Crowns and casings of machinery spaces of category A should be of steel construction adequately insulated and any openings therein should be suitably arranged and protected to prevent the spread of fire.

5.4 Bulkheads within the accommodation and service spaces

5.4.1 Within the accommodation and service spaces, all bulkheads required to be "B" Class divisions should extend from deck to deck and to the shell or other boundaries. Unless continuous "B" Class ceilings or linings, or both, are fitted on both sides of the bulkheads in which case the bulkhead could terminate at the continuous ceiling or lining.

5.4.2 Method IF. All bulkheads not required by this or other sections of this Part to be "A" or "B" Class divisions should be at least "C" Class divisions.

5.4.3 Method IIF. There should be no restriction on the construction of bulkheads not required by this or other sections of this Part to be "A" or "B" Class divisions except in individual cases where "C" Class bulkheads are required in accordance with Table l in 5.7.

5.4.4 Method IIIF. There should be no restriction on the construction of bulkheads not required by this or other sections of this Part to be "A" or "B" Class divisions. In no case should the area of any accommodation space or spaces bounded by a continuous "A" or "B" Class division exceed 50 square metres, except in individual cases where "C" Class bulkheads are required in accordance with Table l in 5.7. However, the competent authority may increase this area for public spaces.

5.5 Protection of stairways and lift trunks in accommodation spaces, service spaces and control stations

5.5.1 Stairways, which penetrate only a single deck, should be protected at least at one level by at least "B-0" Class divisions and self-closing doors. Lifts, which penetrate only a single deck, should be enclosed by "A-0" Class divisions with steel doors at both levels. Stairways and lift trunks which penetrate more than a single deck should be enclosed by at least "A-0" Class divisions and protected by self-closing doors at all levels.

5.5.2 All stairways should be of steel frame construction except where the competent authority permits the use of other equivalent material.

5.6 Doors in fire-resistant divisions

5.6.1 Doors should have resistance to fire as far as practicable, equivalent to the division in which they are fitted. Doors and doorframes in "A" Class divisions should be constructed of steel. Doors in "B" Class divisions should be non-combustible. Doors fitted in boundary bulkheads of machinery spaces of category A should be self-closing and reasonably gastight. The competent authority could permit the use of combustible materials in doors separating cabins from the individual interior sanitary accommodation, such as showers, if constructed according to Method IF.

5.6.2 Doors required to be self-closing should not be fitted with holdback hooks. However, holdback arrangements fitted with remote release fittings of the fail-safe type could be used.

5.6.3 Ventilation openings could be permitted in and under the doors in corridor bulkheads except that such openings should not be permitted in and under stairway enclosure doors. The openings should be provided only in the lower half of a door. Where such opening is in or under a door the total net area of any such opening or openings should not exceed 0.05 m^2. When such opening is cut in a door it should be fitted with a grille made of non-combustible material.

5.6.4 Watertight doors need not be insulated.

5.7 Fire integrity of bulkheads and decks

5.7.1 In addition to the specific provisions for fire integrity of bulkheads and decks required elsewhere in this part the minimum fire integrity of bulkheads and decks should be as prescribed in tables l and 2 of this section.

5.7.2 The following requirements should govern application of the tables:

(a) tables l and 2 should apply respectively to bulkheads and decks separating adjacent spaces; and

(b) for determining the appropriate fire integrity standards to be applied to divisions between adjacent spaces, such spaces are classified according to their fire risk as follows:

(i) Control Stations (1)
Spaces containing emergency sources of power and lighting.
Wheelhouse and chartroom.
Spaces containing the vessel's radio equipment.
Fire-extinguishing rooms, fire-control rooms and fire recording stations.
Control room for propulsion machinery when located outside the machinery space.
Spaces containing centralized fire alarm equipment.

(ii) Corridors (2)
Corridors and lobbies.

(iii) Accommodation Spaces (3)
Spaces as defined in 5.2.10 and 5.2.11 excluding corridors.

(iv) Stairways (4)
Interior stairways, lifts and escalators other than those wholly contained within the machinery spaces and enclosures thereto. In this connection, a stairway, which is enclosed only at one level, should be regarded as part of the space from which it is not separated by a fire door.

(v) Service Spaces of Low Fire Risk (5)
Lockers and storerooms having areas of less than 2 m^2 and laundries.

(vi) Machinery Spaces of category A (6)
Spaces as defined in 5.2.14.

(vii) Other Machinery Spaces (7)
Spaces as defined in 5.2.15 including fishmeal processing spaces, but excluding machinery spaces of category A.

(viii) Cargo Spaces (8)
All spaces used for cargo, including cargo oil tanks, and trunkways and hatchways to such spaces.

(ix) Service Spaces of High Fire Risk (9)
Galleys, pantries containing cooking appliances, paint rooms, lamp rooms, lockers and store-rooms having areas of 2 m^2or more, and workshops other than those forming part of the machinery spaces.

(x) Open Decks (l0)
Open deck spaces and enclosed promenades, spaces for processing fish in the raw state, fish washing spaces and similar spaces containing no fire risk. The air spaces outside superstructures and deckhouses.

The title of each category is intended to be typical rather than restrictive. The number in parenthesis following each category refers to the applicable column or row in the tables.

Table 1 Fire Integrity Of Bulkheads Separating Adjacent Spaces

Spaces	**(1)**	**(2)**	**(3)**	**(4)**	**(5)**	**(6)**	**(7)**	**(8)**	**(9)**	**(10)**
Control Stations (l)	A-0 [e]	A-0	A-60	A-0	A-15	A-60	A-15	A-60	A-60	*
Corridors (2)		C	B-0	B-0 A-0[c]	B-0	A-60	A-0	A-0	A-0	*
Accommodation Spaces (3)			C[a,b]	B-0 A-0[c]	B-0	A-60	A-0	A-0	A-0	*
Stairways (4)				B-0 A-0[c]	B-0 A-0[c]	A-60	A-0	A-0	A-0	*
Service Spaces of Low Fire Risk (5)					C	A-60	A-0	A-0	A-0	*
Machinery Spaces of Category A (6)						*	A-0	A-0	A-60	*
Other Machinery Spaces (7)							A-0[d]	A-0	A-0	*
Cargo Spaces (8)								*	A-0	*
Service Spaces of High Fire Risk (9)									A-0[d]	*
Open Decks (10)										-

Table 2 Fire Integrity Of Decks Separating Adjacent Spaces

Space Above → Space below ↓	**(1)**	**(2)**	**(3)**	**(4)**	**(5)**	**(6)**	**(7)**	**(8)**	**(9)**	**(10)**
Control Stations (1)	A-0	A-0	A-0	A-0	A-0	A-60	A-0	A-0	A-0	*
Corridors (2)	A-0	*	*	A-0	*	A-60	A-0	A-0	A-0	*
Accommodation (3)	A-60	A-0	*	A-0	*	A-60	A-0	A-0	A-0	*
Stairways (4)	A-0	A-0	A-0	*	A-0	A-60	A-0	A-0	A-0	*
Service Spaces of Low Fire Risk (5)	A-15	A-0	A-0	A-0	*	A-60	A-0	A-0	A-0	*
Machinery Spaces of Category A (6)	A-60	A-60	A-60	A-60	A-60	*	A-60	A-30	A-60	*
Other Machinery Spaces (7)	A-15	A-0	A-0	A-0	A-0	A-0	*	A-0	A-0	*
Cargo Spaces (8)	A-60	A-0	A-0	A-0	A-0	A-0	A-0	*	A-0	*
Service Spaces of High Fire Risk (9)	A-60	A-0	A-0	A-0	A-0	A-0	A-0	A-0	A-0[f]	*
Open Decks (10)	*	*	*	*	*	*	*	*	*	-

***Notes: To be applied to both tables 1 and 2, as appropriate.**

(a) No special requirements are imposed upon these bulkheads in Methods IIF and IIIF fire protection.

(b) In case of Method IIIF "B" Class bulkheads of "B-0" rating should be provided between spaces or groups of spaces of 50 m^2 and over in area.

(c) For clarification as to which applies see 5.4 and 5.5.

(d) Where spaces are of the same numerical category and superscript d appears, a bulkhead or deck of the rating shown in the Tables is only required when the adjacent spaces are for a different purpose, e.g. in category (9). A galley next to a galley does not require a bulkhead but a galley next to a paint room requires an "A-0" bulkhead.

(e) Bulkheads separating the wheelhouse, chartroom and radio room from each other may be "B-0" rating.

(f) Fire insulation need not be fitted if the machinery space in category (7), in the opinion of the competent authority, has little or no fire risk.

* Where an asterisk appears in the tables the division should be of steel or equivalent material but do need to be of "A" class standard.

5.7.3 Continuous "B" Class ceilings or linings, in association with the relevant decks or bulkheads, could be accepted as contributing, wholly or in part, to the required insulation and integrity of a division.

5.7.4 Windows and skylights to machinery spaces should be as follows:

(a) where skylights can be opened they should be capable of being closed from outside the space. Skylights containing glass panels should be fitted with external shutters of steel or other equivalent material permanently attached;

(b) glass or similar materials should not be fitted in machinery space boundaries. This does not preclude the use of wire-reinforced glass for skylights and glass in control rooms within the machinery spaces; and

(c) in skylights referred to in sub-paragraph (a) wire-reinforced glass should be used.

5.7.5 External boundaries which are required by 5.3.1 to be of steel or equivalent material could be pierced for the fitting of windows and sidescuttles provided that there is no requirement elsewhere in this Part for such boundaries to have "A" Class integrity. Similarly, in such boundaries, which are not required to have "A" Class integrity, doors may be of materials to the satisfaction of the competent authority.

5.8 Details of construction

5.8.1 Method IF. In accommodation and service spaces and control stations all linings, draught stops, ceilings and their associated grounds should be of non-combustible materials.

5.8.2 Methods IIF and IIIF. In corridors and stairway enclosures serving accommodation and service spaces and control stations, ceilings, linings, draught stops and their associated grounds should be of non-combustible materials.

5.8.3 Methods IF, IIF and IIIF

(a) Except in cargo spaces or refrigerated compartments of service spaces insulating materials should be non-combustible. Vapour barriers and adhesives used in conjunction with insulation, as well as the insulation of pipe fittings, for cold service systems need not be of non-combustible material, but they should be kept to the minimum quantity practicable and their exposed surfaces should have qualities of resistance to the propagation of flame to the satisfaction of the competent authority. In spaces where penetration of oil products is possible, the surface of insulation should be impervious to oil or oil vapour.

(b) Where non-combustible bulkheads, linings and ceilings are fitted in accommodation and service spaces they could have a combustible veneer not exceeding 2.0 mm in thickness within any such space except corridors, stairway enclosures and control stations, where it should not exceed 1.5 mm in thickness.

(c) Air spaces enclosed behind ceilings, panellings, or linings should be divided by close-fitting draught stops spaced not more than 14 m apart. In the vertical direction, such spaces, including those behind linings of stairways, trunks, etc., should be closed at each deck.

5.9 Ventilation systems

5.9.1 (a) Ventilation ducts should be of non-combustible material. Short ducts, however, not generally exceeding 2 m in length and with a cross section not exceeding 0.02 m^2 need not be non-combustible, subject to the following conditions:

(i) these ducts should be of a material, which to the satisfaction of the competent authority, has a low fire risk;

(ii) they should only be used at the end of the ventilation device; and

(iii) they should not be situated less than 600 mm, measured along the duct, from an opening in an "A" or "B" Class division including continuous "B" Class ceilings.

(b) Where the ventilation ducts with a free cross-sectional area exceeding 0.02 m^2 pass through "A" Class bulkheads or decks, the opening should be lined with a steel sheet sleeve unless the ducts passing through the bulkheads or decks are of steel in the vicinity of passage through the deck or bulkhead and comply in that portion of the duct with the following:

(i) for ducts with a free cross-sectional area exceeding 0.02 m^2 the sleeves should have a thickness of at least 3 mm and a length of at least 900 mm. When passing through bulkheads this length should preferably be divided evenly on each side of the bulkhead. Ducts with free cross-sectional area exceeding 0.02 m^2 should be provided with fire insulation. The insulation should have at least the same fire integrity as the bulkhead or deck through which the duct passes. Equivalent penetration protection should be provided to the satisfaction of the competent authority; and

(ii) ducts with a free cross-sectional area exceeding 0.085 m^2 should be fitted with fire dampers in addition to the recommendations of sub-paragraph (b)(i). The fire damper should operate automatically but should also be capable of being closed manually from both sides of the bulkhead or deck. The damper should be provided with an indicator, which shows whether the damper is open or closed. Fire dampers are not required, however, where ducts pass through spaces surrounded by "A" Class divisions, without serving those spaces, provided those ducts have the same fire integrity as the bulkheads which they penetrate.

(c) Ventilation ducts for machinery spaces of category A or galleys should not in general pass through accommodation spaces, service spaces or control stations. Where the competent authority permits this arrangement, the ducts should be constructed of steel or equivalent material and so arranged as to preserve the integrity of the divisions.

(d) Ventilation ducts of accommodation spaces, service spaces or control stations should not in general pass through machinery spaces of category A or through galleys. Where the competent authority permits this arrangement the ducts should be constructed of steel or equivalent material and so arranged as to preserve the integrity of the divisions.

(e) Where ventilation ducts with a free cross-sectional area exceeding 0.02 m^2 pass through "B" Class bulkheads the openings should be lined with steel sheet sleeves of at least 900 mm in length, unless the ducts are of steel for this length in way of the bulkheads. When passing through a "B" Class bulkhead this length should preferably be divided evenly on each side of the bulkhead.

(f) Such measures as are practicable should be taken in respect of control stations outside machinery spaces in order to ensure that ventilation, visibility and freedom from smoke are maintained, so that in the event of fire the machinery and equipment contained therein may be supervised and continue to function effectively. Alternative and separate means of air supply should be provided; air inlets of the two sources of supply should be so disposed that the risk of both inlets drawing in smoke simultaneously is minimized. At the discretion of the competent authority, such requirements need not apply to control stations situated on, and opening on to, an open deck, or where local closing arrangements are equally effective.

(g) Where they pass through accommodation spaces or spaces containing combustible materials, the exhaust ducts from galley ranges should be constructed of "A" Class divisions. Each exhaust duct should be fitted with:

(i) a grease trap readily removable for cleaning;

(ii) a fire damper located in the lower end of the duct;

(iii) arrangements, operable from within the galley, for shutting off the exhaust fan; and

(iv) fixed means for extinguishing a fire within the duct, except where the competent authority considers such fittings impractical in a vessel of less than 75 m in length.

5.9.2 The main inlets and outlets of all ventilation systems should be capable of being closed from outside the spaces being ventilated. Power ventilation of accommodation spaces, service spaces, control stations and machinery spaces should be capable of being stopped from an easily accessible position outside the space being served. This position should not be readily cut off in the event of a fire in the spaces served. The means provided for stopping the power ventilation of the machinery spaces should be entirely separate from the means provided for stopping ventilation of other spaces.

5.9.3 Means should be provided for closing, from a safe position, the annular spaces around funnels.

5.9.4 Ventilation systems serving machinery spaces should be independent of systems serving other spaces.

5.9.5 Storerooms containing appreciable quantities of highly flammable products should be provided with ventilation arrangements, which are separate from other ventilation systems. Ventilation should be arranged at high and low levels and the inlets and outlets of ventilators should be positioned in safe areas and fitted with spark arresters.

5.10 Heating installations

5.10.1 Electric radiators should be fixed in position and so constructed as to reduce fire risks to a minimum. No such radiator should be fitted with an element so exposed that clothing, curtains, or other similar materials can be scorched or set on fire by heat from the element.

5.10.2 Heating by means of open fires should not be permitted. Heating stoves and other similar appliances should be firmly secured and adequate protection and insulation against fire should be provided beneath and around such appliances and in way of their uptakes. Uptakes of stoves, which burn solid fuel should be so arranged and designed as to minimize the possibility of becoming blocked by combustion products and should have a ready means for cleaning. Dampers for limiting draughts in uptakes should, when in the closed position, still leave an adequate area open. Spaces in which stoves are installed should be provided with ventilators of sufficient area to provide adequate combustion-air for the stove. Such ventilators should have no means of closure and their position should be such that closing appliances in accordance with 2.9 are not required.

5.10.3 Open flame gas appliances, except cooking stoves and water heaters, should not be permitted. Spaces containing any such stoves or water heaters should have adequate ventilation to remove fumes and possible gas leakage to a safe place. All pipes conveying gas from container to stove or water heater should be of steel or other approved material. Automatic safety gas shut-off devices should be fitted to operate on loss of pressure in the gas main pipe or flame failure on any appliance.

5.10.4 Where gaseous fuel is used for domestic purposes, the arrangements, storage, distribution and use of the fuel should be to the satisfaction of the competent authority and in accordance with 5.12.

5.11 Miscellaneous items*

5.11.1 All exposed surfaces in corridors and stairway enclosures and surfaces including grounds in concealed or inaccessible spaces in accommodation and service spaces and control stations should have low flame-spread characteristics.** Exposed surfaces of ceilings in accommodation and service spaces and control stations should have low flame-spread characteristics.

5.11.2 Paints, varnishes and other finishes used on exposed interior surfaces should not be capable of producing excessive quantities of smoke or toxic gases or vapours, to be determined in accordance with the Fire Test Procedures Code.

5.11.3 Primary deck coverings within accommodation and service spaces and control stations, should be of approved material which will not readily ignite or give rise to toxic or explosive hazards at elevated temperatures this being determined in accordance with the Fire Test Procedures Code.***

5.11.4 Where "A" or "B" Class divisions are penetrated for the passage of electrical cables, pipes, trunks, ducts, etc., or for the fitting of ventilation terminals, lighting fixtures and similar devices, arrangements should be made to ensure that the fire integrity of the divisions is not impaired.

5.11.5 (a) In accommodation and service spaces and control stations, pipes penetrating "A" or "B" Class divisions should be of approved materials having regard to the temperature that such divisions are required to withstand. Where the competent authority permits the conveying of oil and combustible liquids through accommodation and service spaces, the pipes conveying oil or combustible liquids should be of an approved material having regard to the fire risk.

(b) Materials readily rendered ineffective by heat should not be used for overboard scuppers, sanitary discharges, and other outlets which are close to the waterline and where the failure of the material in the event of fire would give rise to danger of flooding.

5.11.6 Cellulose-nitrate-based film should not be used in cinematography installations.

5.11.7 All waste receptacles other than those used in fish processing should be constructed of non-combustible materials with no openings in the sides or bottom.

5.11.8 Machinery driving fuel oil transfer pumps, fuel oil unit pumps and other similar fuel pumps should be fitted with remote controls situated outside the space concerned so that they can be stopped in the event of a fire arising in the space in which they are located.

5.11.9 Drip trays should be fitted where necessary to prevent oil leaking into bilges.

---

* See the Guidance concerning the Use of Certain Plastic Materials contained in Recommendation 7 of attachment 3 to the Final Act of the 1993 Torremolinos Conference.

** See the Guidelines for the Evaluation of Fire Hazard Properties of Materials adopted by the Organization by resolution A.166 (ES.IV) and the Recommendation on Improved Fire Test Procedures for Surface Flammability of Bulkhead, Ceiling and Deck Finish Materials adopted by the Organization by resolution A.653(16).

*** See the Recommendation on Fire Test Procedures for Ignitability of Primary Deck Coverings adopted by the Organization by resolution A.687(17).

5.11.10 Within compartments used for stowage of fish, combustible insulation should be protected by close-fitting cladding.

5.12 Storage of gas cylinders and dangerous materials

5.12.1 Cylinders for compressed, liquefied, or dissolved gases should be clearly marked by means of prescribed identifying colours have a clearly legible identification of the name and chemical formula of their contents and should be properly secured.

5.12.2 Cylinders containing flammable or other dangerous gases and expended cylinders should be stored, properly secured, on open decks and all valves, pressure regulators and pipes leading from such cylinders should be protected against damage. Cylinders should be protected against excessive variations in temperature, direct rays of the sun, and accumulation of snow. However, the competent authority may permit such cylinders to be stored in compartments complying with the recommendations of 5.12.3 to 5.12.5.

5.12.3 Spaces containing highly flammable liquids, such as volatile paints, paraffin, benzole, etc., and where permitted, liquefied gas, should have direct access from open decks only. Pressure adjusting devices and relief valves should exhaust within the compartment. Where boundary bulkheads of such compartments adjoin other enclosed spaces they should be gastight.

5.12.4 Except as necessary for service within the space, electrical wiring and fittings should not be permitted within compartments used for the storage of highly flammable liquids or liquefied gases. Where such electrical fittings are installed, they should be to the satisfaction of the competent authority for use in a flammable atmosphere. Sources of heat should be kept clear of such spaces and "No Smoking" and "No Naked Light" notices should be displayed in a prominent position.

5.12.5 Separate storage should be provided for each type of compressed gas. Compartments used for the storage of such gases should not be used for storage of other combustible products nor for tools or objects not part of the gas distribution system. However, the competent authority may relax these recommendations considering the characteristics, volume, and intended use of such compressed gases.

5.13 Means of escape

5.13.1 Stairways and ladders leading to and from all accommodation spaces and in spaces, in which the crew is normally employed, other than machinery spaces, should be so arranged as to provide ready means of escape to the open deck and thence to the survival craft. In particular in relation to these spaces:

(a) at all levels of accommodation at least two widely separated means of escape should be provided which may include the normal means of access from each restricted space or group of spaces;

(b) (i) below the weather deck the main means of escape should be a stairway and the second escape may be a trunk or a stairway; and

(ii) above the weather deck the means of escape should be stairways or doors to an open deck or a combination thereof;

(c) exceptionally the competent authority may permit only one means of escape, due regard being paid to the nature and location of spaces and to the number of persons who normally might be accommodated or employed there;

(d) a corridor or part of a corridor from which there is only one route of escape, should not exceed 7 m in length; and

(e) the width and continuity of the means of escape should be to the satisfaction of the competent authority

5.13.2 Two means of escape should be provided from every machinery space of category A by one of the following means:

(a) two sets of steel ladders as widely separated as possible leading to doors in the upper part of the space similarly separated and from which access is provided to the open deck. In general, one of these ladders should provide continuous fire shelter from the lower part of the space to a safe position outside the space. However, the competent authority may not require such shelter if, due to special arrangements or dimensions of the machinery space, a safe escape route from the lower part of this space is provided. This shelter should be of steel, insulated and be provided with a self-closing steel door at the lower end; or

(b) one steel ladder leading to a door in the upper part of the space from which access is provided to the open deck and additionally, in the lower part of the space and in a position well separated from the ladder referred to, a steel door capable of being operated from each side and which provides access to a safe escape route from the lower part of the space to the open deck.

5.13.3 From machinery spaces other than those of category A, escape routes should be provided to the satisfaction of the competent authority having regard to the nature and location of the space and whether persons are normally employed in that space.

5.13.4 Lifts should not be considered as forming one of the required means of escape.

5.14 Automatic sprinkler and fire alarm and fire detection systems (Method IIF)

5.14.1 In vessels in which method IIF is adopted an automatic sprinkler and fire alarm system of an approved type and complying with the recommendations of this section should be installed and so arranged as to protect accommodation spaces and service spaces except spaces which afford no substantial fire risks, such as void spaces and sanitary spaces.

5.14.2 (a) The system should be capable of immediate operation at all times and no action by the crew should be necessary to set it in operation. It should be of the wet pipe type but small exposed sections could be of the dry pipe type where in the opinion of the competent authority this is a necessary precaution. Any parts of the system which may be subjected to freezing temperatures in service should be suitably protected against freezing.* It should be kept charged at the necessary pressure and should have provision for a continuous supply of water as required in 5.14.6(b).

* See the Guidance on Precautions Against Freezing of Fire Mains contained in recommendation 6 of attachment to the Final Act of the 1993 Torremolinos Conference.

(b) Each section of sprinklers should include means for giving a visible and audible alarm signal automatically at one or more indicating units whenever any sprinkler comes into operation. Such units should indicate in which section served by the system, fire has occurred and should be centralized in the wheelhouse and in addition, visible and audible alarms from the unit should be placed in a position other than in the wheelhouse, so as to ensure that the indication of fire is immediately received by the crew. Such an alarm system should be so constructed as to indicate if any fault occurs in the system.

5.14.3 (a) Sprinklers should be grouped into separate sections, each of which should contain not more than 200 sprinklers.

(b) Each section of sprinklers should be capable of being isolated by one stop valve only. The stop valve in each section should be readily accessible and its location should be clearly and permanently indicated. Means should be provided to prevent the operation of the stop valves by any unauthorized person.

(c) A gauge indicating the pressure in the system should be provided at each section stop valve and at a central station.

(d) The sprinklers should be resistant to corrosion. In accommodation and service spaces the sprinklers should come into operation within the temperature range of 68ºC and 79ºC, except that in locations such as drying rooms, where high ambient temperatures might be expected, the operating temperature could be increased by not more than 30ºC above the maximum deck head temperature.

(e) A list or plan should be displayed at each indicating unit showing the spaces covered and the location of the zone in respect of each section. Suitable instructions for testing and maintenance should be available.

5.14.4 Sprinklers should be placed in an overhead position and spaced in a suitable pattern to maintain an average application rate of not less than 5 *l* per m^2 per minute over the nominal area covered by the sprinklers. Alternatively, the competent authority may permit the use of sprinklers providing such quantity of water suitably distributed as has been shown to the satisfaction of the competent authority to be not less effective.

5.14.5 (a) A pressure tank having a volume equal to at least twice that of the charge of water specified in this sub-paragraph should be provided. The tank should contain a standing charge of fresh water, equivalent to the amount of water which would be discharged in one minute by the pump referred to in 5.14.6(b) and the arrangements should provide for maintaining such air pressure in the tank as to ensure that, where the standing charge of fresh water in the tank has been used, the pressure will be not less than the working pressure of the sprinkler, plus the pressure due to a head of water measured from the bottom of the tank to the highest sprinkler in the system. Suitable means of replenishing the air under pressure and of replenishing the fresh water charge in the tank should be provided. A glass gauge should be provided to indicate the correct level of the water in the tank.

(b) Means should be provided to prevent the passage of seawater into the tank.

5.14.6 (a) An independent power pump should be provided solely for the purpose of continuing automatically the discharge of water from the sprinklers. The pump should be brought into action automatically by the pressure drop in the system before the standing fresh water charge in the pressure tank is completely exhausted.

(b) The pump and the piping system should be capable of maintaining the necessary pressure at the level of the highest sprinkler to ensure a continuous output of water sufficient for the simultaneous coverage of the maximum area separated by fire-resisting bulkheads of "A" and "B" Class divisions or an area of 280 m^2 whichever is the less at the application rate specified in 5.14.4.

(c) The pump should have fitted on the delivery side a test valve with a short open-ended discharge pipe. The effective area through the valve and pipe should be adequate to permit the release of the required pump output while maintaining the pressure in the system specified in 5.14.5(a).

(d) The sea inlet to the pump should wherever possible be in the space containing the pump and should be so arranged that when the vessel is afloat it will not be necessary to shut off the supply of sea-water to the pump for any purpose other than the inspection or repair of the pump.

5.14.7 The sprinkler pump and tank should be situated in a position reasonably remote from any machinery space of category A and should not be situated in any space required to be protected by the sprinkler system.

5.14.8 (a) There should not be less than two sources of power supply for the seawater pump and the automatic fire alarm and fire detection system. If the pump is electrically driven it should be connected to the main source of electrical power, which should be capable of being supplied by at least two generators.

(b) The feeders should be arranged so as to avoid galleys, machinery spaces and other enclosed spaces of high fire risk except in so far as it is necessary to reach the appropriate switchboard. One of the sources of power supply for the fire alarm and fire detection system should be an emergency source. Where one of the sources of power for the pump is an internal combustion-type engine it should, in addition to complying with the provisions of 5.14.7, be so situated that a fire in any protected space will not affect the air supply to that engine.

5.14.9 The sprinkler system should have a connection from the vessel's fire main by way of a lockable screw-down non-return valve at the connection, which will prevent a backflow from the sprinkler system to the fire main.

5.14.10 (a) A test valve should be provided for testing the automatic alarm for each section of sprinklers by a discharge of water equivalent to the operation of one sprinkler. The test valve for each section should be situated near the stop valve for that section.

(b) Means should be provided for testing the automatic operation of the pump on reduction of pressure in the system.

(c) Switches should be provided at one of the indicating positions referred to in sub-5.14.2(b), which will enable the alarm and the indicators for each section of sprinklers to be tested.

5.14.11 Spare sprinkler heads should be provided for each section of sprinklers to the satisfaction of the competent authority.

5.15 Automatic fire alarm and fire detection systems (Method IIIF)

5.15.1 In vessels in which Method IIIF is adopted an automatic fire alarm and fire detection system of an approved type and complying with the recommendations of this section should be installed and so arranged as to detect the presence of fire in all accommodation spaces and service spaces except spaces which afford no substantial fire risk, such as void spaces and sanitary spaces.

5.15.2 (a) The system should be capable of immediate operation at all times and no action of the crew should be necessary to set it in operation.

(b) Each section of detectors should include means for giving a visible and audible alarm signal automatically at one or more indicating units whenever any detector comes into operation. Such units should indicate in which section served by the system a fire has occurred and should be centralized on the wheelhouse and such other positions as will ensure that any alarm from the system is immediately received by the crew. Additionally, arrangements should be provided to ensure that an alarm is sounded on the deck on which the fire has been detected. Such an alarm and detection system should be so constructed as to indicate if any fault occurs in the system.

5.15.3 Detectors should be grouped into separate sections, each covering not more than 50 rooms served by such a system and containing not more than 100 detectors. Detectors should be zoned to indicate on which deck a fire has occurred.

5.15.4 The system should be operated by an abnormal air temperature, by an abnormal concentration of smoke or by other factors indicative of incipient fire in any one of the spaces to be protected. Systems, which are sensitive to air temperature, should not operate at less than 54ºC and should operate at a temperature not greater than 78ºC when the temperature increase to those levels is not more than 1ºC per minute. At the discretion of the competent authority the permissible temperature of operation could be increased to 30ºC above the maximum deckhead temperature in drying rooms and similar places of a normally high ambient temperature. Systems, which are sensitive to smoke concentration, should operate on the reduction of the intensity of a transmitted light beam by an amount to be determined by the competent authority. Other equally effective methods of operation could be accepted at the discretion of the competent authority. The detection system should not be used for any purpose other than fire detection.

5.15.5 The detectors should be arranged to operate the alarm by the opening or closing of contacts or by other appropriate methods. They should be fitted in an overhead position and should be suitably protected against impact and physical damage. They should be suitable for use in a marine atmosphere. They should be placed in an open position clear of beams and other objects likely to obstruct the flow of hot gases or smoke to the sensitive element. Detectors operated by the closing of contacts should be of the sealed contact type and the circuit should be continuously monitored to indicate fault conditions.

5.15.6 At least one detector should be installed in each space where detection facilities are required and there should be not less than one detector for each 37 m^2 of deck area approximately. In large spaces the detectors should be arranged in a regular pattern so that no detector is more than 9 m from another detector or more than 4.5 m from a bulkhead.

5.15.7 There should be not less than two sources of power supply for the electrical equipment used in the operation of the fire alarm and fire detection system, one of which should be an emergency source. The supply should be provided by separate feeders reserved solely for that purpose. Such feeders should run to a changeover switch situated in the control station for the fire detection system. The wiring system should be so arranged as to avoid galleys, machinery spaces and other enclosed spaces having a high fire risk except in so far as it is necessary to provide for fire detection in such spaces or to reach the appropriate switchboard.

5.15.8 (a) A list or plan should be displayed adjacent to each indicating unit showing the spaces covered and the location of the zone in respect of each system. Suitable instructions for testing and maintenance should be available.

(b) Provision should be made for testing the correct operation of the detectors and the indicating units by supplying means for applying hot air or smoke at detector positions.

5.15.9 Spare detector heads should be provided for each section of detectors to the satisfaction of the competent authority.

5.16 Fixed fire-extinguishing arrangements in cargo spaces of high fire risk

Cargo spaces of high fire risk should be protected by a fixed gas fire-extinguishing system complying with the Fire Safety System Code or by a fire-extinguishing system, which gives equivalent protection, to the satisfaction of the competent authority.

5.17 Fire pumps

5.17.1 At least two fire pumps should be provided.

5.17.2 If a fire in any one compartment could put all the fire pumps out of action there should be an alternative means of providing water for fire fighting. In vessels of 75 m in length and over this alternative means should be a fixed emergency fire pump independently driven. This emergency fire pump should be capable of supplying two jets of water to the satisfaction of the competent authority.

5.17.3 (a) The fire pumps, other than the emergency pump should be capable of delivering for fire-fighting purposes a quantity of water at a minimum pressure of 0.25 N/mm^2, with a total capacity (Q) of at least:

$$Q = \left(0.15 \sqrt{L(B+D)} + 2.25 \right)^2 \ m^3/h$$

where L, B and D are in metres.

However, the total required capacity of the fire pumps need not exceed l80 m^3 h.

(b) Each of the required fire pumps other than any emergency pump should have a capacity not less than 40% of the total capacity of fire pumps required by sub-paragraph (a) and should in any event be capable of delivering at least the jets of water required by 5.19.2(a). These fire pumps should be capable of supplying the fire main systems under the required conditions. Where more than two pumps are installed the capacity of such additional pumps should be to the satisfaction of the competent authority.

5.17.4 (a) Fire pumps should be independently driven power pumps. Sanitary, ballast, bilge or general service pumps can be accepted as fire pumps, provided that they are not normally used for pumping oil and that, if they are subject to occasional duty for the transfer or pumping of fuel oil, suitable change-over arrangements are fitted.

(b) Relief valves should be provided in conjunction with all fire pumps if the pumps are capable of developing a pressure exceeding the design pressure of the water service pipes, hydrants and hoses. These valves should be so placed and adjusted as to prevent excessive pressure in any of the fire main systems.

(c) Emergency power-operated fire pumps should be independently driven self-contained pumps either with their own diesel engine prime mover and fuel supply fitted in an accessible position outside the compartment which contains the main fire pumps, or be driven by a self-contained generator, which can be the emergency generator referred to in 4.17, of sufficient capacity and which is positioned in a safe place outside the engine room and preferably above the working deck. The emergency fire pump should be capable of operating for a period of at least 3 h.

(d) Emergency fire pumps, sea-suction valves and other necessary valves should be operable from outside compartments containing main fire pumps in a position not likely to be cut off by a fire in those compartments.

5.18 Fire mains

5.18.1 (a) Where more than one hydrant is required to provide the number of jets specified in 5.19.2(a) a fire main should be provided.

(b) Fire mains should have no connections other than those required for fire fighting, except for the purpose of washing the deck and anchor chains and operation of bilge ejectors, subject to the efficiency of the fire-fighting system being maintained.

(c) Where fire mains are not self-draining, suitable drain cocks should be fitted where frost damage could be expected.*

5.18.2 (a) The diameter of the fire main and water service pipes should be sufficient for the effective distribution of the maximum required discharge from two fire pumps operating simultaneously or of 140 m^3 per hour, whichever is the less.

* See the Guidance on Precautions Against Freezing of Fire Mains contained in recommendation 6 of attachment to the Final Act of the 1993 Torremolinos Conference.

(b) With the two pumps simultaneously delivering through nozzles specified in 5.19.5 the quantity of water specified in sub-paragraph (a) of this section, through any adjacent hydrants, the minimum pressure of 0.25 N/mm^2 should be maintained at all hydrants.

5.19 Fire hydrants, fire hoses and nozzles

5.19.1 (a) The number of fire hoses provided should be equal to the number of fire hydrants arranged according to 5.19.2 and one spare hose. This number does not include any fire hoses required in any engine or boiler room. The competent authority can increase the number of fire hoses required so as to ensure that hoses in sufficient number are available and accessible at all times, having regard to the size of the vessel.

(b) Fire hoses should be of approved material and sufficient in length to project a jet of water to any of the spaces in which they may be required to be used. Their maximum length should be 20 m. Every fire hose should be provided with a nozzle and the necessary couplings. Fire hoses should together with any necessary fittings and tools be kept ready for use in conspicuous positions near the water service hydrants or connections.

5.19.2 (a) The number and position of the hydrants should be such that at least two jets of water not emanating from the same hydrant, one of which should be from a single length of fire hose, may reach any part of the vessel normally accessible to the crew while the vessel is being navigated.

(b) All required hydrants should be fitted with fire hoses having dual-purpose nozzles as required by 5.19.5. One hydrant should be located near the entrance of the space to be protected.

5.19.3 Materials readily rendered ineffective by heat should not be used for fire mains and hydrants unless adequately protected. The pipes and hydrants should be so placed that the fire hoses may be easily coupled to them. In vessels where deck cargo can be carried, the positions of the hydrants should be such that they are always readily accessible and the pipes should be arranged as far as practicable to avoid risk of damage by such cargo. Unless one fire hose and nozzle is provided for each hydrant, there should be complete interchange ability of fire hose couplings and nozzles.

5.19.4 A cock or valve should be fitted to serve each fire hose so that any fire hose may be removed while the fire pumps are operating.

5.19.5 (a) Standard nozzle sizes should be 12 mm, 16 mm and 19 mm or as near to as possible. Larger diameter nozzles can be permitted at the discretion of the competent authority.

(b) For accommodation and service spaces, a nozzle size greater than 12 mm need not be used.

(c) For machinery spaces and exterior locations, the nozzle size should be such as to obtain the maximum discharge possible from two jets at the pressure specified in 5.18.2(b) from the smallest pump, provided that a nozzle size greater than 19 mm need not be used.

5.20 Fire extinguishers*

5.20.1 Fire extinguishers should be of approved types. The capacity of required portable fluid extinguishers should be not more than 13.5 *l* and not less than 9 *l*. Other extinguishers should not be in excess of the equivalent portability of the 13.5 *l* fluid extinguisher and should not be less than the fire-extinguishing equivalent of a 9 *l* fluid extinguisher. The competent authority should determine the equivalents of fire extinguishers.

5.20.2 Spare charges should be provided to the satisfaction of the competent authority.

5.20.3 Fire extinguishers containing an extinguishing medium, which, in the opinion of the competent authority, either by itself or under expected conditions of use, gives off toxic gases in such quantities as to endanger persons should not be permitted.

5.20.4 Fire extinguishers should be periodically examined and subject to such tests as the competent authority may require.

5.20.5 Normally, one of the portable fire extinguishers intended for use in any space should be stowed near an entrance to that space.

5.21 Portable fire extinguishers in control stations and accommodation and service spaces

5.21.1 At least five approved portable fire extinguishers should be provided in control stations and accommodation and service spaces to the satisfaction of the competent authority.

5.21.2 Spare charges should be provided to the satisfaction of the competent authority.

5.22 Fire-extinguishing appliances in machinery spaces

5.22.1 (a) Spaces containing oil-fired boilers or fuel oil units should be provided with one of the following fixed fire-extinguishing systems, to the satisfaction of the competent authority:

(i) a pressure water-spraying installation;

(ii) a fire-smothering gas installation;

(iii) a fire-extinguishing installation using vapours from low toxicity vapourizing liquids; or

(iv) a fire-extinguishing installation using high expansion foam.

Where the engine and boiler rooms are not entirely separate, or if fuel oil can drain from the boiler room into the engine room, the combined engine and boiler rooms should be considered as one compartment.

* See the Improved Guidelines for Marine Portable Fire Extinguishers adopted by the Organization by resolution A.951(23).

(b) New installations of halogenated hydrocarbon systems used as fire-extinguishing media should be prohibited on new and existing vessels.

(c) Every boiler room should be provided with at least one set of portable air-foam equipment to the satisfaction of the competent authority.

(d) At least two approved portable extinguishers discharging foam or equivalent should be provided in each firing space in each boiler room and each space in which a part of the fuel oil installation is situated. At least one approved foam-type extinguisher of at least 135 *l* capacity or equivalent should be provided in each boiler room. These extinguishers should be provided with hoses on reels suitable for reaching any part of the boiler room. The competent authority can relax the recommendations of this sub-paragraph, having regard to the size and nature of the space to be protected.

(e) In each firing space there should be a receptacle containing sand, sawdust impregnated with soda or other approved dry material, in such quantity as may be required by the competent authority. Alternatively an approved portable extinguisher may be provided.

5.22.2 Spaces containing internal combustion machinery used either for main propulsion or for other purposes, when such machinery has a total power output of not less than 750 kW, should be provided with the following arrangements:

(a) one of the fire-extinguishing systems required by 5.22.1(a);

(b) at least one set of portable air-foam equipment to the satisfaction of the competent authority; and

(c) in each such space, approved foam-type fire extinguishers each of at least 45 *l* capacity, or equivalent, sufficient in number to enable foam or its equivalent to be directed on to any part of the fuel and lubricating oil pressure systems, gearing and other fire hazards. In addition, there should be provided a sufficient number of portable foam extinguishers or equivalent which should be so located that an extinguisher is not more than 10 m walking distance from any point in the space; provided that there should be at least two such extinguishers in each such space. For smaller spaces the competent authority can relax these recommendations.

5.22.3 Spaces containing steam turbines or enclosed steam engines used either for main propulsion, or for other purposes, when such machinery has a total power output of not less than 750 kW should be provided with the following arrangements:

(a) foam fire extinguishers each of at least 45 *l* capacity, or equivalent, sufficient in number to enable foam or its equivalent to be directed on to any part of the pressure lubrication system, on to any part of the casings enclosing pressure lubricated parts of the turbines, engines or associated gearing, and any other fire hazards. Provided that such extinguishers should not be required if protection at least equivalent to that of this sub-paragraph is provided in such spaces by a fixed fire-extinguishing system fitted in compliance with 5.22.1(a); and

(b) a sufficient number of portable foam extinguishers, or equivalent, which should be so located that an extinguisher is not more than 10 m walking distance from any point in the space; provided that there should be at least two such extinguishers in each such space, and such extinguishers should not be required in addition to any provided in compliance with 5.22.2(c).

5.22.4 Where, in the opinion of the competent authority, a fire hazard exists in any machinery space for which no specific provisions for fire-extinguishing appliances are prescribed in 5.22.1, 5.22.2 and 5.22.3 there should be provided in, or adjacent to, that space a number of approved portable fire extinguishers or other means of fire extinction to the satisfaction of the competent authority.

5.22.5 Where fixed fire-extinguishing systems not required by this part are installed, such systems should be to the satisfaction of the competent authority.

5.22.6 For any machinery space of category A to which access is provided at a low level from an adjacent shaft tunnel, there should be provided in addition to any watertight door and on the side remote from that machinery space a light steel fire-screen door which should be capable of being operated from each side of the door.

5.23 International shore connection

5.23.1 At least one international shore connection, complying with 5.23.2 should be provided.

5.23.2 Standard dimensions of flanges for the international shore connection should be in accordance with the following table:

Description	Dimension
Outside diameter	178 mm
Inner diameter	64 mm
Bolt circle diameter	132 mm
Slots in flange	4 holes 19 mm in diameter equidistantly placed on a bolt circle of the above diameter, slotted to the flange periphery
Flange thickness	14.5 mm minimum
Bolts and nuts	4 each of 16 mm in diameter and 50 mm in length

5.23.3 This connection should be constructed of material suitable for 1.0 N/mm^2 service pressure.

5.23.4 The flange should have a flat face on one side and the other should have a coupling permanently attached thereto that will fit the vessel's hydrant and hose. The connection should be kept aboard the vessel together with a gasket of any material suitable for 1.0 N/mm^2 service pressure together with four 16-mm bolts 50 mm in length and eight washers.

5.23.5 Facilities should be available enabling such a connection to be used on either side of the vessel.

5.24 Fire-fighter's outfits

5.24.1 At least two fire-fighters' outfits should be carried. The fire-fighters' outfits should be in accordance with the Fire Safety Systems Code, chapter III, paragraphs 2.1, 2.1.1 and 2.1.2.

5.24.2 The fire-fighters' outfits should be stored so as to be easily accessible and ready for use and should be stored in widely separated positions.

5.25 Fire control plan

There should be a permanently exhibited fire control plan to the satisfaction of the competent authority.*

5.26 Ready availability of fire-extinguishing appliances

Fire-extinguishing appliances should be kept in good order and available for immediate use at all times.

5.27 Acceptance of substitutes

Where in this part any special type of appliance, apparatus, extinguishing medium or arrangement is specified, any other type of appliance, etc., can be allowed, provided the competent authority is satisfied that it is not less effective.

PART C - FIRE SAFETY MEASURES IN VESSELS OF 45 M IN LENGTH AND OVER BUT LESS THAN 60 M

5.28 Structural fire protection

5.28.1 The hull, superstructure, structural bulkheads, decks and deckhouses should be constructed of non-combustible materials. The competent authority may permit combustible construction provided the requirements of this section and the additional fire-extinguishing requirements of 5.40.3 are complied with.

5.28.2 (a) In vessels, the hull of which is constructed of non-combustible materials, the decks and bulkheads separating machinery spaces of category A from accommodation spaces, service spaces or control stations should be constructed to "A-60" Class standard where the machinery space of category A is not provided with a fixed fire-extinguishing system and to "A-30" Class standard where such a system is fitted. Decks and bulkheads separating other machinery spaces from accommodation, service spaces and control stations should be constructed to "A-0" Class standard. Decks and bulkheads separating control stations from accommodation and service spaces should be constructed to "A" Class standard, insulated to the satisfaction of the competent authority, except that a competent authority may permit the fitting of "B-15" Class divisions for separating such spaces as skipper's cabin from the wheelhouse.

(b) In vessels, the hull of which is constructed of combustible materials, the decks and bulkheads separating machinery spaces from accommodation spaces, service spaces or control stations should be constructed to "F" Class or "B-15" Class standard. In addition, machinery space boundaries should as far as practicable prevent the passage of smoke. Decks and bulkheads separating control stations from accommodation and service spaces should be constructed to "F" Class standard.

* Refer to the graphical symbols for shipboard fire control plans adopted by resolution A.952(23).

5.28.3 (a) In vessels, the hull of which is constructed of non-combustible materials, bulkheads of corridors serving accommodation spaces, service spaces and control stations should be of "B-15" Class divisions.

(b) In vessels, the hull of which is constructed of combustible materials, bulkheads of corridors serving accommodation spaces, service spaces and control stations, should be of "F" Class divisions.

(c) Any bulkhead required by sub-paragraph (a) or (b) should extend from deck to deck unless a continuous ceiling of the same Class as the bulkhead is fitted on both sides of the bulkhead, in which case the bulkhead can terminate at the continuous ceiling.

5.28.4 Interior stairways serving accommodation spaces, service spaces or control stations should be of steel or other equivalent material. Such stairways should be within enclosures constructed of "F" Class divisions in vessels the hull of which is constructed of combustible materials, or "B-15" Class divisions in vessels the hull of which is constructed of non-combustible materials, provided that where a stairway penetrates only one deck it need be enclosed at one level only.

5.28.5 Doors and other closures of openings in bulkheads and decks referred to in 5.28.2 and 5.28.3, doors fitted to stairway enclosures referred to in 5.28.4 and doors fitted in engine and boiler casings, should be as far as practicable equivalent in resisting fire to the divisions in which they are fitted. Doors to machinery spaces of category A should be self-closing.

5.28.6 Lift trunks, which pass through the accommodation and service spaces, should be constructed of steel or equivalent material and should be provided with means of closing which will permit control of draught and smoke.

5.28.7 (a) In vessels, the hull of which is constructed of combustible materials, the boundary bulkheads and decks of spaces containing any emergency source of power and bulkheads and decks between galleys, paint rooms, lamp rooms or any store-rooms which contain appreciable quantities of highly flammable materials, and accommodation spaces, service spaces or control stations should be constructed of "F" Class or "B-15" Class divisions.

(b) In vessels, the hull of which is constructed of non-combustible materials, the decks and bulkheads referred to in sub-paragraph (a) should be of "A" Class divisions insulated to the satisfaction of the competent authority, having in mind the risk of fire, except that the competent authority can accept "B-15" Class divisions between galley and accommodation spaces, service spaces and control stations when the galley contains electrically heated furnaces, electrically heated hot water appliances or other electrically heated appliances only.

(c) Highly flammable products should be carried in suitably sealed containers.

5.28.8 Where bulkheads or decks required by 5.28.2, 5.28.3, 5.28.5 or 5.28.7 to be of "A", "B" or "F" Class divisions, are penetrated for the passage of electrical cables, pipes, trunks, ducts, etc., arrangements should be made to ensure that the fire integrity of the division is not impaired.

5.28.9 Air spaces enclosed behind ceilings, panellings or linings in accommodation spaces, service spaces and control stations should be divided by close-fitting draught stops spaced not more than 7 m apart.

5.28.10 Windows and skylights to machinery spaces should be as follows:

(a) where skylights can be opened they should be capable of being closed from outside the space. Skylights containing glass panels should be fitted with external shutters of steel or other equivalent material permanently attached;

(b) glass or similar materials should not be fitted in machinery space boundaries. This does not preclude the use of wire-reinforced glass for skylights and glass in control rooms within the machinery spaces; and

(c) in skylights referred to in sub-paragraph (a) wire-reinforced glass should be used.

5.28.11 Insulating materials in accommodation spaces, service spaces except domestic refrigerating compartments, control stations and machinery space should be non-combustible. The surface of insulation fitted on the internal boundaries of machinery spaces of category A should be impervious to oil or oil vapours.

5.28.12 Within compartments used for stowage of fish, combustible insulation should be protected by close-fitting cladding.

5.28.13 Notwithstanding the requirements of this section, the competent authority can accept "A-0" class divisions in lieu of "B-15" or "F" class divisions, having regard to the amount of combustible materials used in adjacent spaces.

5.29 Ventilation systems

5.29.1 Except as provided for in 5.30.2, means should be provided to stop fans and close main openings to ventilation systems from outside the spaces served.

5.29.2 Means should be provided for closing, from a safe position, the annular spaces around funnels.

5.29.3 Ventilation openings can be permitted in and under the doors in corridor bulkheads except that such openings should not be permitted in and under stairway enclosure doors. The openings should be provided only in the lower half of a door. Where such opening is in or under a door the total net area of any such opening or openings should not exceed 0.05 m^2. When such opening is cut in a door it should be fitted with a grille made of non-combustible material.

5.29.4 Ventilation ducts for machinery spaces of category A or galleys should not in general pass through accommodation spaces, service spaces or control stations. Where the competent authority permits this arrangement, the ducts should be constructed of steel or equivalent material and arranged to preserve the integrity of the divisions.

5.29.5 Ventilation ducts of accommodation spaces, service spaces or control stations should not in general pass through machinery spaces of category A or through galleys. Where the competent authority permits this arrangement the ducts should be constructed of steel or equivalent material and arranged to preserve the integrity of the divisions.

5.29.6 Storerooms containing appreciable quantities of highly flammable products should be provided with ventilation arrangements, which are separate from other ventilation systems. Ventilation should be arranged at high and low levels and the inlets and outlets of ventilators should be positioned in safe areas. Suitable wire mesh guards to arrest sparks should be fitted over inlet and outlet ventilation openings.

5.29.7 Ventilation systems serving machinery spaces should be independent of systems serving other spaces.

5.29.8 Where trunks or ducts serve spaces on both sides of "A" Class bulkheads or decks dampers should be fitted so as to prevent the spread of fire and smoke between compartments. Manual dampers should be operable from both sides of the bulkhead or the deck. Where the trunks or ducts with a free cross-sectional area exceeding 0.02 m^2 pass through "A" Class bulkheads or decks, automatic self-closing dampers should be fitted. Trunks serving compartments situated only on one side of such bulkheads should comply with 5.9.1(b).

5.30 Heating installations

5.30.1 Electric radiators should be fixed in position and so constructed as to reduce fire risks to a minimum. No such radiator should be fitted with an element so exposed that clothing, curtains or other similar materials can be scorched or set on fire by heat from the element.

5.30.2 Heating by means of open fires should not be permitted. Heating stoves and other similar appliances should be firmly secured and adequate protection and insulation against fire should be provided beneath and around such appliances and in way of their uptakes. Uptakes of stoves, which burn solid fuel, should be so arranged and designed as to minimize the possibility of becoming blocked by combustion products and should have a ready means for cleaning. Dampers for limiting draughts in uptakes should, when in the closed position, still leave an adequate area open. Spaces in which stoves are installed should be provided with ventilators of sufficient area to provide adequate combustion-air for the stove. Such ventilators should have no means of closure and their position should be such that no closing appliances in accordance with 2.9 are required.

5.30.3 Open flame gas appliances, except cooking stoves and water heaters, should not be permitted. Spaces containing any such stoves or water heaters should have adequate ventilation to remove fumes and possible gas leakage to a safe place. All pipes conveying gas from container to stove or water heater should be of steel or other approved material. Automatic safety gas shut-off devices should be fitted to operate on loss of pressure in the gas main pipe or flame failure on any appliance.

5.31 Miscellaneous items*

5.31.1 Exposed surfaces within accommodation spaces, service spaces, control stations, corridor and stairway enclosures and the concealed surfaces behind bulkheads, ceilings, panellings and linings in accommodation spaces, service spaces, and control stations should have low flame-spread characteristics.**

---

* See the Guidance concerning the Use of Certain Plastic Materials contained in recommendation 7 of attachment 3 to the Final Act of the 1993 Torremolinos Conference.

** See Guidelines on the Evaluation of Fire Hazard Properties of Materials adopted by the Organization by resolution A.166(ES.IV) and the Recommendation on Improved Fire Test Procedures for Surface Flammability of Bulkhead, Ceiling and Deck Finish Materials adopted by the Organization by resolution A.653(16).

5.31.2 All exposed surfaces of glass reinforced plastic construction within accommodation and service spaces, control stations, machinery spaces of category A and other machinery spaces of similar fire risk should have the final lay-up layer of approved resin having inherent fire-retardant properties or be coated with an approved fire-retardant paint or be protected by non-combustible materials.

5.31.3 Paints, varnishes and other finishes used on exposed interior surfaces should not be capable of producing excessive quantities of smoke or toxic gases or vapours. The competent authority should be satisfied that they are not of a nature to offer undue fire hazard.

5.31.4 Primary deck coverings within accommodation and service spaces and control stations should be of approved material which will not readily ignite or give rise to toxic or explosive hazards at elevated temperatures.[***]

5.31.5 (a) In accommodation and service spaces and control stations, pipes penetrating "A" or "B" Class divisions should be of approved materials having regard to the temperature that such divisions are required to withstand. Where the competent authority permits the conveying of oil and combustible liquids through accommodation and service spaces, the pipes conveying oil or combustible liquids should be of an approved material having regard to the fire risk.

(b) Materials readily rendered ineffective by heat should not be used for overboard scuppers, sanitary discharges, and other outlets which are close to the waterline and where the failure of the material in the event of fire would give rise to danger of flooding.

5.31.6 All waste receptacles other than those used in fish processing should be constructed of non-combustible materials with no openings in the sides and bottom.

5.31.7 Machinery driving fuel oil transfer pumps, fuel oil unit pumps and other similar fuel pumps should be fitted with remote controls situated outside the space concerned so that they can be stopped in the event of a fire arising in the space in which they are located.

5.31.8 Drip trays should be fitted where necessary to prevent oil leaking into bilges.

5.32 Storage of gas cylinders and dangerous materials

5.32.1 Cylinders for compressed, liquefied or dissolved gases should be clearly marked by means of prescribed identifying colours, have a clearly legible identification of the name and chemical formula of their contents and should be properly secured.

5.32.2 Cylinders containing flammable or other dangerous gases and expended cylinders should be stored, properly secured, on open decks and all valves, pressure regulators and pipes leading from such cylinders should be protected against damage. Cylinders should be protected against excessive variations in temperature, direct rays of the sun, and accumulation of snow. However, the competent authority can permit such cylinders to be stored in compartments complying with the requirements of 5.32.3 to 5.32.5.

[***] For vessels the deck of which are constructed of steel, see the Recommendation on Fire Test Procedures for Ignitability of Primary Deck Coverings adopted by the Organization by resolution A.687(17).

5.32.3 Spaces containing highly flammable liquids, such as volatile paints, paraffin, benzole, etc., and, where permitted, liquefied gas should have direct access from open decks only. Pressure-adjusting devices and relief valves should exhaust within the compartment. Where boundary bulkheads of such compartments adjoin other enclosed spaces they should be gastight.

5.32.4 Except as necessary for service within the space, electrical wiring and fittings should not be permitted within compartments used for the storage of highly flammable liquids or liquefied gases. Where such electrical fittings are installed, they should be to the satisfaction of the competent authority for use in a flammable atmosphere. Sources of heat should be kept clear of such spaces and "No Smoking" and "No Naked Light" notices should be displayed in a prominent position.

5.32.5 Separate storage should be provided for each type of compressed gas. Compartments used for the storage of such gases should not be used for storage of other combustible products nor for tools or objects not part of the gas distribution system. However, the competent authority may relax these requirements considering the characteristics, volume and intended use of such compressed gases.

5.33 Means of escape

5.33.1 Stairways and ladders leading to and from all accommodation spaces and in spaces, in which the crew is normally employed, other than machinery spaces, should be so arranged as to provide ready means of escape to the open deck and thence to the survival craft. In particular in relation to these spaces:

(a) at all levels of accommodation at least two widely separated means of escape should be provided which can include the normal means of access from each restricted space or group of spaces;

(b) (i) below the weather deck the means of escape should be a stairway and the second escape can be a trunk or a stairway; and

(ii) above the weather deck the means of escape should be stairways or doors to an open deck or a combination thereof. Where it is not practicable to fit stairways or doors, one of these means of escape can be by means of adequately sized portholes or hatches protected where necessary against ice accretion;

(c) exceptionally the competent authority can permit only one means of escape, due regard being paid to the nature and location of spaces and to the number of persons who normally might be accommodated or employed there;

(d) a corridor or part of a corridor from which there is only one route of escape should preferably not exceed 2.5 m in length and in no case be greater than 5.0 m in length; and

(e) the width and continuity of the means of escape should be to the satisfaction of the competent authority.

5.33.2 Two means of escape should be provided from every machinery space of category A, which should be as widely separated as possible. Vertical escapes should be by means of steel ladders. Where the size of the machinery spaces makes it impracticable, one of these means of escape can be omitted. In such cases special consideration should be given to the remaining exit.

5.33.3 Lifts should not be considered as forming one of the required means of escape.

5.34 Automatic fire alarm and fire detection systems

Where the competent authority has permitted under 5.28.1 a combustible construction, or where otherwise appreciable amounts of combustible materials are used on the construction of accommodation spaces, service spaces and control stations, special consideration should be given to the installation of an automatic fire alarm and fire detection system in those spaces, having due regard to the size of those spaces, their arrangement and location relative to control stations as well as, where applicable, the flame-spread characteristics of the installed furniture.

5.35 Fire pumps

5.35.1 The minimum number and type of fire pumps to be fitted should be as follows:

(a) one power pump not dependent upon the main machinery for its motive power; or

(b) one power pump driven by main machinery provided that the propeller shafting can be readily disconnected or provided that a controllable pitch propeller is fitted.

5.35.2 Sanitary, bilge, ballast, general service or any other pumps can be used as fire pumps if they comply with the requirements of this Chapter and do not affect the ability to cope with pumping of the bilges. Fire pumps should be so connected that they cannot be used for pumping oil or other flammable liquids.

5.35.3 Centrifugal pumps or other pumps connected to the fire main through which back flow could occur should be fitted with non-return valves.

5.35.4 Vessels not fitted with a power-operated emergency fire pump and without a fixed fire-extinguishing system in the machinery spaces should be provided with additional fire-extinguishing means to the satisfaction of the competent authority.

5.35.5 When fitted, emergency power-operated fire pumps should be independently driven self-contained pumps either with their own prime mover and fuel supply fitted in an accessible position outside the compartment which contains the main fire pumps, or be driven by a self-contained generator which can be an emergency generator of sufficient capacity and which is positioned in a safe place outside the engine room and preferably above the working deck.

5.35.6 For any emergency fire pump, where fitted, the pump, sea-suction valves and other necessary valves should be operable from outside compartments containing main fire pumps in a position not likely to be cut off by a fire in those compartments.

5.35.7 The total capacity (Q) of main power-operated fire pumps should be at least:

$$Q = \left(0.15\sqrt{L(B+D)} + 2.25\right)^2 \text{ m}^3/\text{h}$$

where L, B and D are in metres.

5.35.8 Where two independent power-operated fire pumps are fitted, the capacity of each pump should not be less than 40% of the quantity required by 5.35.7.

5.35.9 When main power fire pumps are delivering the quantity of water required by 5.35.7 through the fire main, fire hoses and nozzles, the pressure maintained at any hydrant should be not less than 0.25 N/mm^2.

5.35.10 Where power-operated emergency fire pumps are delivering the maximum quantity of water through the jet required by 5.37.1, the pressure maintained at any hydrant should be to the satisfaction of the competent authority.

5.36 Fire mains

5.36.1 Where more than one hydrant is required to provide the number of jets required by 5.37.1, a fire main should be provided.

5.36.2 Materials readily rendered ineffective by heat should not be used for fire mains, unless adequately protected.

5.36.3 Where fire pump delivery pressure can exceed the designed working pressure of fire mains, relief valves should be fitted.

5.36.4 Fire mains should have no connections other than those required for fire fighting, except for the purpose of washing the deck and anchor chains or operation of bilge ejectors, subject to the efficiency of the fire-fighting system being maintained.

5.36.5 Where fire mains are not self-draining, suitable drain cocks should be fitted where frost damage may be expected.*

5.37 Fire hydrants, fire hoses and nozzles

5.37.1 Fire hydrants should be positioned so as to allow easy and quick connection of fire hoses and so that at least one jet can be directed into any part of the vessel which is normally accessible during navigation.

5.37.2 The jet required in 5.37.1 should be from a single length of fire hose.

5.37.3 In addition to the requirements of 5.37.1, machinery spaces of category A should be provided with at least one fire hydrant complete with fire hose and dual-purpose nozzle. This fire hydrant should be located outside the space and near the entrance.

5.37.4 For every required fire hydrant there should be one fire hose. At least one spare fire hose should be provided in addition to this requirement.

5.37.5 Single lengths of fire hose should not exceed 20 m.

5.37.6 Fire hoses should be of an approved material. Each fire hose should be provided with couplings and a dual-purpose nozzle.

* See the Guidance for Precautions Against Freezing of Fire Mains contained in recommendation 6 of attachment 3 to the Final Act of the 1993 Torremolinos Conference.

5.37.7 Except where fire hoses are permanently attached to the fire main, the couplings of fire hoses and nozzles should be completely interchangeable.

5.37.8 The nozzles as required by 5.37.6 should be appropriate to the delivery capacity of the fire pumps fitted, but in any case should have a diameter of not less than 12 mm.

5.38 Fire extinguishers*

5.38.1 Fire extinguishers should be of approved types. The capacity of required portable fluid extinguishers should be not more than 13.5 *l* and not less than 9 *l*. Other extinguishers should not be in excess of the equivalent portability of the 13.5 *l* fluid extinguisher and should not be less than the fire-extinguishing equivalent of a 9 *l* fluid extinguisher. The competent authority should determine the equivalents of fire extinguishers.

5.38.2.1 Spare charges should be provided to the satisfaction of the competent authority.

5.38.3 Fire extinguishers containing an extinguishing medium, which, in the opinion of the competent authority, either by itself or under expected conditions of use, gives off toxic gases in such quantities as to endanger persons should not be permitted.

5.38.4 Fire extinguishers should be periodically examined and subjected to such tests as the competent authority may require.

5.38.5 Normally, one of the portable fire extinguishers intended for use in any space should be stowed near an entrance to that space.

5.39 Portable fire extinguishers in control stations and accommodation and service spaces

5.39.1 A sufficient number of approved portable fire extinguishers should be provided in control stations and accommodation and service spaces to ensure that at least one extinguisher of a suitable type is readily available for use in any part of such spaces. The total number of extinguishers in these spaces, however, should not be less than three.

5.39.2 Spare charges should be provided to the satisfaction of the competent authority.

5.40 Fire-extinguishing appliances in machinery spaces

5.40.1 (a) Spaces containing oil-fired boilers, fuel oil units or internal combustion machinery having a total power output of not less than 750kW should be provided with one of the following fixed fire extinguishing systems, to the satisfaction of the competent authority:

(i) a pressure water-spraying installation;

(ii) a fire-smothering gas installation;

* See the Improved Guidelines for Marine Portable Fire Extinguishers adopted by the Organization by resolution A.951(23).

(iii) a fire-extinguishing installation using vapours from low toxicity vapourizing liquids; or

(iv) a fire-extinguishing installation using high expansion foam.

(b) New installations of halogenated hydrocarbon systems used as fire-extinguishing media should be prohibited on new and existing vessels.

(c) Where the engine and boiler rooms are not entirely separated from each other or if fuel oil can drain from the boiler room into the engine room, the combined engine and boiler rooms should be considered as one compartment.

5.40.2 Installations listed in 5.40.1(a) should be controlled from readily accessible positions outside such spaces not likely to be cut off by a fire in the protected space. Arrangements should be made to ensure the supply of power and water necessary for the operation of the system in the event of fire in the protected space.

5.40.3 Vessels which are constructed mainly or wholly of wood or fibre reinforced plastic and fitted with oil-fired boilers or internal combustion machinery which are decked in way of the machinery space with such material, should be provided with one of the extinguishing systems referred to in 5.40.1.

5.40.4 In all machinery spaces of category A at least two portable extinguishers should be provided, of a type suitable for extinguishing fires involving fuel oil. Where such spaces contain machinery, which has a total power output of not less than 250 kW, at least three such extinguishers should be provided. One of the extinguishers should be stowed near the entrance to the space.

5.40.5 Vessels having machinery spaces not protected by a fixed fire extinguishing system should be provided with at least a 45 *l* foam extinguisher or its equivalent, suitable for fighting oil fires. Where the size of the machinery spaces makes this provision impracticable, the competent authority can accept an additional number of portable fire extinguishers.

5.41 Fire-fighters' outfits

The number of fire-fighters' outfits and their locations should be to the satisfaction of the competent authority.*

5.42 Fire control plan

There should be a permanently exhibited fire control plan to the satisfaction of the competent authority*.

5.43 Ready availability of fire-extinguishing appliances

Fire-extinguishing appliances should be kept in good order and available for immediate use at all times.

* Refer to the graphical symbols for shipboard fire control plans adopted by resolution A.952(23).

5.44 Acceptance of substitutes

Where in this part any special type of appliance, apparatus, extinguishing medium or arrangement is specified, any other type of appliance, etc., can be allowed provided the competent authority is satisfied that it is not less effective.

PART D - FIRE SAFETY MEASURES IN VESSELS OF 24 M IN LENGTH AND OVER BUT LESS THAN 45 M

5.45 Structural fire protection

5.45.1 The hull, superstructure, structural bulkheads, decks and deckhouses should be constructed of non-combustible materials. The competent authority may permit combustible construction provided the requirements of this section and the additional fire-extinguishing requirements of 5.40.3 are complied with.

5.45.2 (a) In vessels, the hull of which is constructed of non-combustible materials, the decks and bulkheads separating machinery spaces of category A from accommodation spaces, service spaces or control stations should be constructed to "A-60" Class standard where the machinery space of category A is not provided with a fixed fire-extinguishing system and to "A-0" Class standard where such a system is fitted. Decks and bulkheads separating other machinery spaces from accommodation, service spaces and control stations should be constructed to "A-0" Class standard. Decks and bulkheads separating control stations from accommodation and service spaces should be constructed to "B" Class standard, insulated to the satisfaction of the competent authority.

(b) In vessels, the hull of which is constructed of combustible materials, the decks and bulkheads separating machinery spaces from accommodation spaces, service spaces or control stations should be constructed to "F" Class or "B-15" Class standard. In addition, machinery space boundaries should as far as practicable prevent the passage of smoke. Decks and bulkheads separating control stations from accommodation and service spaces should be constructed to "F" Class standard.

5.45.3 (a) In vessels, the hull of which is constructed of non-combustible materials, such bulkheads should be of "B-0" Class divisions.

(b) In vessels, the hull of which is constructed of combustible materials, such bulkheads should be of fire-retardant material to the satisfaction of the competent authority.

(c) Any bulkhead of corridors serving accommodation spaces, services and central stations should extend from deck to deck unless a continuous ceiling of the same Class as the bulkhead is fitted on both sides of the bulkhead, in which case the bulkhead can terminate at the continuous ceiling.

5.45.4 Interior stairways serving accommodation spaces, service spaces or control stations should be of steel or other equivalent material. Such stairways connecting more than two decks should be within enclosures constructed of "F" Class divisions in vessels the hull of which is constructed of combustible materials, or "B-15" Class divisions in vessels the hull of which is constructed of non-combustible materials.

5.45.5 Doors and other closures of openings in bulkheads and decks referred to in 5.45.2 and 5.45.3, doors fitted to stairway enclosures referred to in 5.45.4 and doors fitted in engine and boiler casings, should be as far as practicable equivalent in resisting fire to the divisions in which they are fitted. Doors to machinery spaces of category A should be self-closing.

5.45.6 Lift trunks, which pass through the accommodation and service spaces, should be constructed of steel or equivalent material and should be provided with means of closing which will permit control of draught and smoke.

5.45.7 (a) In vessels, the hull of which is constructed of combustible materials, the boundary bulkheads and decks of spaces containing any emergency source of power and bulkheads and decks between galleys, paint rooms, lamp rooms or any store-rooms which contain appreciable quantities of highly flammable materials, and accommodation spaces, service spaces or control stations should be constructed of "F" Class or "B-15" Class divisions.

(b) In vessels, the hull of which is constructed of non-combustible materials, the decks and bulkheads referred to in sub-paragraph (a) should be of "A" Class divisions insulated to the satisfaction of the competent authority, having in mind the risk of fire, except that the competent authority can accept "B-15" Class divisions between galley and accommodation spaces, service spaces and control stations when the galley contains electrically heated furnaces, electrically heated hot water appliances or other electrically heated appliances only.

(c) Highly flammable products should be carried in suitably sealed containers.

5.45.8 Where bulkheads or decks required by 5.45.2, 5.45.3, 5.45.5 or 5.45.7 to be of "A" Class, "B" Class or "F" Class divisions, are penetrated for the passage of electrical cables, pipes, trunks, ducts, etc., arrangements should be made to ensure that the fire integrity of the division is not impaired.

5.45.9 Air spaces enclosed behind ceilings, panellings or linings in accommodation spaces, service spaces and control stations should be divided by close-fitting draught stops spaced not more than 7 m apart.

5.45.10 Windows and skylights to machinery spaces should be as follows:

(a) where skylights can be opened they should be capable of being closed from outside the space. Skylights containing glass panels should be fitted with external shutters of steel or other equivalent material permanently attached.

(b) glass or similar materials should not be fitted in machinery space boundaries. This does not preclude the use of wire-reinforced glass for skylights and glass in control rooms within the machinery spaces; and

(c) In skylights referred to in sub-paragraph (a) wire-reinforced glass should be used.

5.45.11 Insulating materials in accommodation spaces, service spaces except domestic refrigerating compartments, control stations and machinery space should be non-combustible.

The surface of insulation fitted on the internal boundaries of machinery spaces of category A should be impervious to oil or oil vapours.

5.45.12 Within compartments used for stowage of fish, combustible insulation should be protected by close-fitting cladding.

5.45.13 Notwithstanding the requirements of this section, the competent authority can accept "A-0" class divisions in lieu of "B-15" or "F" class divisions, having regard to the amount of combustible materials used in adjacent spaces.

5.46 Ventilation systems

5.46.1 Except as provided for in 5.47.2, means should be provided to stop fans and close main openings to ventilation systems from outside the spaces served.

5.46.2 Means should be provided for closing, from a safe position, the annular spaces around funnels.

5.46.3 Ventilation openings can be permitted in and under the doors in corridor bulkheads except that such openings should not be permitted in and under stairway enclosure doors. The openings should be provided only in the lower half of a door. Where such opening is in or under a door the total net area of any such opening or openings should not exceed 0.05 m^2. When such opening is cut in a door it should be fitted with a grille made of non-combustible material.

5.46.4 Ventilation ducts for machinery spaces of category A or galleys should not in general pass through accommodation spaces, service spaces or control stations. Where the competent authority permits this arrangement, the ducts should be constructed of steel or equivalent material and arranged to preserve the integrity of the divisions.

5.46.5 Ventilation ducts of accommodation spaces, service spaces or control stations should not in general pass through machinery spaces of category A or through galleys. Where the competent authority permits this arrangement the ducts should be constructed of steel or equivalent material and arranged to preserve the integrity of the divisions.

5.46.6 Storerooms containing appreciable quantities of highly flammable products should be provided with ventilation arrangements, which are separate from other ventilation systems. Ventilation should be arranged at high and low levels and the inlets and outlets of ventilators should be positioned in safe areas. Suitable wire mesh guards to arrest sparks should be fitted over inlet and outlet ventilation openings.

5.46.7 Ventilation systems serving machinery spaces should be independent of systems serving other spaces.

5.46.8 Where trunks or ducts serve spaces on both sides of "A" Class bulkheads or decks dampers should be fitted so as to prevent the spread of fire and smoke between compartments. Manual dampers should be operable from both sides of the bulkhead or the deck. Where the trunks or ducts with a free cross-sectional area exceeding 0.02 m^2 pass through "A" Class bulkheads or decks, automatic self-closing dampers should be fitted. Trunks serving compartments situated only on one side of such bulkheads should comply with 5.9.1(b).

5.47 Heating installations

5.47.1 Electric radiators should be fixed in position and so constructed as to reduce fire risks to a minimum. No such radiator should be fitted with an element so exposed that clothing, curtains or other similar materials can be scorched or set on fire by heat from the element.

5.47.2 Heating by means of open fires should not be permitted. Heating stoves and other similar appliances should be firmly secured and adequate protection and insulation against fire should be provided beneath and around such appliances and in way of their uptakes. Uptakes of stoves, which burn solid fuel, should be so arranged and designed as to minimize the possibility of becoming blocked by combustion products and should have a ready means for cleaning. Dampers for limiting draughts in uptakes should, when in the closed position, still leave an adequate area open. Spaces in which stoves are installed should be provided with ventilators of sufficient area to provide adequate combustion-air for the stove. Such ventilators should have no means of closure and their position should be such that no closing appliances in accordance with 2.9 are required.

5.47.3 Open flame gas appliances, except cooking stoves and water heaters, should not be permitted. Spaces containing any such stoves or water heaters should have adequate ventilation to remove fumes and possible gas leakage to a safe place. All pipes conveying gas from container to stove or water heater should be of steel or other approved material. Automatic safety gas shut-off devices should be fitted to operate on loss of pressure in the gas main pipe or flame failure on any appliance.

5.48 Miscellaneous items*

5.48.1 Exposed surfaces within accommodation spaces, service spaces, control stations, corridor and stairway enclosures and the concealed surfaces behind bulkheads, ceilings, panellings and linings in accommodation spaces, service spaces, and control stations should have low flame-spread characteristics, or to be of fire-retardant materials to the satisfaction of the competent authority.**

5.48.2 All exposed surfaces of glass reinforced plastic construction within accommodation and service spaces, control stations, machinery spaces of category A and other machinery spaces of similar fire risk should have the final lay-up layer of approved resin having inherent fire-retardant properties or be coated with an approved fire-retardant paint or be protected by non-combustible materials.

5.48.3 Paints, varnishes and other finishes used on exposed interior surfaces should not be capable of producing excessive quantities of smoke or toxic gases or vapours. The competent authority should be satisfied that they are not of a nature to offer undue fire hazard.

---

* See the Guidance concerning the Use of Certain Plastic Materials contained in recommendation 7 of attachment 3 to the Final Act of the 1993 Torremolinos Conference.

** See the Guidelines on the Evaluation of Fire Properties of Materials adopted by the Organization by resolution A.166(ES.IV) and the Recommendation on Improved Fire Tests Procedures for Surface Flammability of Bulkhead, Ceiling and Deck Finish Materials adopted by the Organization by resolution A.653(16)

5.48.4 Primary deck coverings within accommodation and service spaces and control stations should be of approved material which will not readily ignite or give rise to toxic or explosive hazards at elevated temperatures.*

5.48.5 (a) In accommodation and service spaces and control stations, pipes penetrating "A" or "B" Class divisions should be of approved materials having regard to the temperature that such divisions are required to withstand. Where the competent authority permits the conveying of oil and combustible liquids through accommodation and service spaces, the pipes conveying oil or combustible liquids should be of an approved material having regard to the fire risk.

(b) Materials readily rendered ineffective by heat should not be used for overboard scuppers, sanitary discharges, and other outlets which are close to the waterline and where the failure of the material in the event of fire would give rise to danger of flooding.

5.48.6 All waste receptacles other than those used in fish processing should be constructed of non-combustible materials with no openings in the sides and bottom.

5.48.7 Machinery driving fuel oil transfer pumps, fuel oil unit pumps and other similar fuel pumps should be fitted with remote controls situated outside the space concerned so that they can be stopped in the event of a fire arising in the space in which they are located.

5.48.8 Drip trays should be fitted where necessary to prevent oil leaking into bilges.

5.49 Storage of gas cylinders and dangerous materials

5.49.1 Cylinders for compressed, liquefied or dissolved gases should be clearly marked by means of prescribed identifying colours, have a clearly legible identification of the name and chemical formula of their contents and should be properly secured.

5.49.2 Cylinders containing flammable or other dangerous gases and expended cylinders should be stored, properly secured, on open decks and all valves, pressure regulators and pipes leading from such cylinders should be protected against damage. Cylinders should be protected against excessive variations in temperature, direct rays of the sun, and accumulation of snow. However, the competent authority can permit such cylinders to be stored in compartments complying with the requirements of 5.49.3 to 5.49.5.

5.49.3 Spaces containing highly flammable liquids, such as volatile paints, paraffin, benzole, etc., and, where permitted, liquefied gas should have direct access from open decks only. Pressure-adjusting devices and relief valves should exhaust within the compartment. Where boundary bulkheads of such compartments adjoin other enclosed spaces they should be gastight.

5.49.4 Except as necessary for service within the space, electrical wiring and fittings should not be permitted within compartments used for the storage of highly flammable liquids or liquefied gases. Where such electrical fittings are installed, they should be to the satisfaction of the competent authority for use in a flammable atmosphere. Sources of heat should be kept clear of such spaces and "No Smoking" and "No Naked Light" notices should be displayed in a prominent position.

---

* For the vessels the decks of which are constructed of steel, see the Recommendation on Fire Test Procedures for Ignitability of Primary Deck Coverings adopted by the Organization by resolution A.687(17)

5.49.5 Separate storage should be provided for each type of compressed gas. Compartments used for the storage of such gases should not be used for storage of other combustible products nor for tools or objects not part of the gas distribution system. However, the competent authority may relax these requirements considering the characteristics, volume and intended use of such compressed gases.

5.50 Means of escape

5.50.1 Stairways and ladders leading to and from all accommodation spaces and in spaces, in which the crew is normally employed, other than machinery spaces, should be so arranged as to provide ready means of escape to the open deck and thence to the survival craft. In particular in relation to these spaces:

(a) at all levels of accommodation at least two widely separated means of escape should be provided which can include the normal means of access from each restricted space or group of spaces;

(b) (i) below the weather deck the means of escape should be a stairway and the second escape can be a trunk or a stairway; and

(ii) above the weather deck the means of escape should be stairways or doors to an open deck or a combination thereof. Where it is not practicable to fit stairways or doors, one of these means of escape can be by means of adequately sized portholes or hatches protected where necessary against ice accretion;

(c) exceptionally the competent authority can permit only one means of escape, due regard being paid to the nature and location of spaces and to the number of persons who normally might be accommodated or employed there;

(d) a corridor or part of a corridor from which there is only one route of escape should preferably not exceed 2.5 m in length and in no case be greater than 5.0 m in length; and

(e) the width and continuity of the means of escape should be to the satisfaction of the competent authority.

5.50.2 Two means of escape should be provided from every machinery space of category A, which should be as widely separated as possible. Vertical escapes should be by means of steel ladders. Where the size of the machinery spaces makes it impracticable, one of these means of escape can be omitted. In such cases special consideration should be given to the remaining exit.

5.50.3 Lifts should not be considered as forming one of the required means of escape.

5.51 Automatic fire alarm and fire detection systems

Where the competent authority has permitted under 5.45.1 a combustible construction, or where otherwise appreciable amounts of combustible materials are used on the construction of accommodation spaces, service spaces and control stations, special consideration should be given to the installation of an automatic fire alarm and fire detection system in those spaces, having due regard to the size of those spaces, their arrangement and location relative to control stations as well as, where applicable, the flame-spread characteristics of the installed furniture.

5.52 Fire pumps

5.52.1 The minimum number and type of fire pumps to be fitted should be as follows:

(a) one power pump not dependent upon the main machinery for its motive power; or

(b) one power pump driven by main machinery provided that the propeller shafting can be readily disconnected or provided that a controllable pitch propeller is fitted.

5.52.2 Sanitary, bilge, ballast, general service or any other pumps can be used as fire pumps if they comply with the requirements of this Chapter and do not affect the ability to cope with pumping of the bilges. Fire pumps should be so connected that they cannot be used for pumping oil or other flammable liquids.

5.52.3 Centrifugal pumps or other pumps connected to the fire main through which back flow could occur should be fitted with non-return valves.

5.52.4 Vessels not fitted with a power-operated emergency fire pump and without a fixed fire-extinguishing system in the machinery spaces should be provided with additional fire-extinguishing means to the satisfaction of the competent authority.

5.52.5 When fitted, emergency power-operated fire pumps should be independently driven self-contained pumps either with their own prime mover and fuel supply fitted in an accessible position outside the compartment which contains the main fire pumps, or be driven by a self-contained generator which can be an emergency generator of sufficient capacity and which is positioned in a safe place outside the engine room and preferably above the working deck.

5.52.6 For any emergency fire pump, where fitted, the pump, sea-suction valves and other necessary valves should be operable from outside compartments containing main fire pumps in a position not likely to be cut off by a fire in those compartments.

5.52.7 The total capacity (Q) of main power-operated fire pumps should be at least:

$$Q = \left(0.15\sqrt{L(B+D)} + 2.25\right)^2 \ m^3/h$$

where L, B and D are in metres.

5.52.8 Where two independent power-operated fire pumps are fitted, the capacity of each pump should not be less than 40 % of the quantity required by 5.52.7.

5.52.9 When main power fire pumps are delivering the quantity of water required by 5.52.7 through the fire main, fire hoses and nozzles, the pressure maintained at any hydrant should be not less than 0.25 N/mm^2.

5.52.10 Where power-operated emergency fire pumps are delivering the maximum quantity of water through the jet required by 5.54.1, the pressure maintained at any hydrant should be to the satisfaction of the competent authority.

5.53 Fire mains

5.53.1 Where more than one hydrant is required to provide the number of jets required by 5.37.1, a fire main should be provided.

5.53.2 Materials readily rendered ineffective by heat should not be used for fire mains, unless adequately protected.

5.53.3 Where fire pump delivery pressure can exceed the designed working pressure of fire mains, relief valves should be fitted.

5.53.4 Fire mains should have no connections other than those required for fire fighting, except for the purpose of washing the deck and anchor chains or operation of bilge ejectors, subject to the efficiency of the fire-fighting system being maintained.

5.53.5 Where fire mains are not self-draining, suitable drain cocks should be fitted where frost damage may be expected.*

5.54 Fire hydrants, fire hoses and nozzles

5.54.1 Fire hydrants should be positioned so as to allow easy and quick connection of fire hoses and so that at least one jet can be directed into any part of the vessel which is normally accessible during navigation.

5.54.2 The jet required in 5.54.1 should be from a single length of fire hose.

5.54.3 In addition to the requirements of 5.54.1, machinery spaces of category A should be provided with at least one fire hydrant complete with fire hose and dual-purpose nozzle. This fire hydrant should be located outside the space and near the entrance.

5.54.4 For every required fire hydrant there should be one fire hose. At least one spare fire hose should be provided in addition to this requirement.

5.54.5 Single lengths of fire hose should not exceed 20 m.

5.54.6 Fire hoses should be of an approved material. Each fire hose should be provided with couplings and a dual-purpose nozzle.

5.54.7 Except where fire hoses are permanently attached to the fire main, the couplings of fire hoses and nozzles should be completely interchangeable.

5.54.8 The nozzles as required by 5.54.6 should be appropriate to the delivery capacity of the fire pumps fitted, but in any case should have a diameter of not less than 12 mm.

* See the Guidance for Precautions Against Freezing of Fire Mains contained in recommendation 6 of attachment 3 to the Final Act of the 1993 Torremolinos Conference.

5.55 Fire extinguishers*

5.55.1 Fire extinguishers should be of approved types. The capacity of required portable fluid extinguishers should be not more than 13.5 *l* and not less than 9 *l*. Other extinguishers should not be in excess of the equivalent portability of the 13.5 *l* fluid extinguisher and should not be less than the fire-extinguishing equivalent of a 9 *l* fluid extinguisher. The competent authority should determine the equivalents of fire extinguishers.

5.55.2 Spare charges should be provided to the satisfaction of the competent authority.

5.55.3 Fire extinguishers containing an extinguishing medium, which, in the opinion of the competent authority, either by itself or under expected conditions of use, gives off toxic gases in such quantities as to endanger persons should not be permitted.

5.55.4 Fire extinguishers should be periodically examined and subjected to such tests as the competent authority may require.

5.55.5 Normally, one of the portable fire extinguishers intended for use in any space should be stowed near an entrance to that space.

5.56 Portable fire extinguishers in control stations and accommodation and service spaces

5.56.1 A sufficient number of approved portable fire extinguishers should be provided in control stations and accommodation and service spaces to ensure that at least one extinguisher of a suitable type is readily available for use in any part of such spaces. The total number of extinguishers in these spaces, however, should not be less than three.

5.55.2 Spare charges should be provided to the satisfaction of the competent authority.

5.57 Fire-extinguishing appliances in machinery spaces

5.57.1 (a) Spaces containing oil-fired boilers, fuel oil units or internal combustion machinery having a total power output of not less than 750kW should be provided with one of the following fixed fire extinguishing systems, to the satisfaction of the competent authority:

(i) a pressure water-spraying installation;

(ii) a fire-smothering gas installation;

(iii) a fire-extinguishing installation using vapours from low toxicity vapourizing liquids; or

(iv) a fire-extinguishing installation using high expansion foam.

---

* See the Improved Guidelines for Marine Portable Fire Extinguishers adopted by the Organization by resolution A.951(23).

(b) New installations of halogenated hydrocarbon systems used as fire-extinguishing media should be prohibited on new and existing vessels.

(c) Where the engine and boiler rooms are not entirely separated from each other or if fuel oil can drain from the boiler room into the engine room, the combined engine and boiler rooms should be considered as one compartment.

5.57.2 Installations listed in 5.57.1(a) should be controlled from readily accessible positions outside such spaces not likely to be cut off by a fire in the protected space. Arrangements should be made to ensure the supply of power and water necessary for the operation of the system in the event of fire in the protected space.

5.57.3 Vessels which are constructed mainly or wholly of wood or fibre reinforced plastic and fitted with oil-fired boilers or internal combustion machinery which are decked in way of the machinery space with such material, should be provided with one of the extinguishing systems referred to in 5.57.1.

5.57.4 In all machinery spaces of category A at least two portable extinguishers should be provided, of a type suitable for extinguishing fires involving fuel oil. Where such spaces contain machinery, which has a total power output of not less than 250 kW, at least three such extinguishers should be provided. One of the extinguishers should be stowed near the entrance to the space.

5.57.5 Vessels having machinery spaces not protected by a fixed fire extinguishing system should be provided with at least a 45 *l* foam extinguisher or its equivalent, suitable for fighting oil fires. Where the size of the machinery spaces makes this provision impracticable, the competent authority can accept an additional number of portable fire extinguishers.

5.58 Fire-fighters' outfits

The number of fire-fighters' outfits and their locations should be to the satisfaction of the competent authority.

5.59 Fire control plan

The competent authority may dispense with this requirement.

5.60 Ready availability of fire-extinguishing appliances

Fire-extinguishing appliances should be kept in good order and available for immediate use at all times.

5.61 Acceptance of substitutes

Where in this part any special type of appliance, apparatus, extinguishing medium or arrangement is specified, any other type of appliance, etc., can be allowed provided the competent authority is satisfied that it is not less effective.

***

ANNEX 5

RELEVANT PARTS OF THE DRAFT REVISED FISHING VESSEL VOLUNTARY GUIDELINES PREPARED BY THE SUB-COMMITTEE

CHAPTER 1

GENERAL PROVISIONS

1.1 Purpose and scope

1.1.1 The purpose of these guidelines is to provide information on design, construction, and equipment of small fishing vessels with a view to promoting the safety of the vessel and safety and health of the crew. They are not intended as a substitute for national laws and regulations but may serve as a guide to those concerned with framing such national laws and regulations. Each competent authority responsible for the safety of fishing vessels should ensure that the provisions of these guidelines are adapted to its specific requirements, having due regard to the size and type of vessels, their intended service and area of operation.

1.1.2 Unless otherwise stated, the provisions of these guidelines are intended to apply to new decked fishing vessels of 12 m in length and over, but less than 24 m in length. Nevertheless, even where not otherwise stated, the competent authority should as far as reasonable and practical give consideration to the application of these provisions to existing decked fishing vessels.

1.1.3 The provisions of these Voluntary Guidelines do not apply to fishing vessels for sport or recreation or to processing vessels.

1.2 Definitions

1.2.1 For the purpose of these guidelines unless expressly provided otherwise the following definitions apply:

.1 "Fishing vessel" - in the following referred to as vessel - means any vessel used commercially for catching fish, whales, seals, walrus or other living resources of the sea;

.2 "Decked vessel" is a vessel having a fixed structural deck covering the entire hull above the deepest operating waterline. Where open wells or cockpits are fitted in this deck the vessel is considered a decked vessel if flooding of the well or cockpit will not endanger the vessel;

.3 "Crew" means the skipper and all persons employed or engaged in any capacity on board a vessel on the business of that vessel;

.4 "Competent authority" is the government of the State whose flag the vessel is entitled to fly;

.5 "New vessel" is a vessel the keel of which is laid, or which is at a similar stage of construction, on or after the date of adoption of the present revision of these guidelines;

.6 "Protocol" means the Torremolinos International Convention for the Safety of Fishing Vessels, 1977, as modified by the Torremolinos Protocol of 1993 relating thereto;

.7 "Length (L)"* should be taken as 96% of the total length on a waterline at 85% of the least depth, or as the length from the foreside of the stem to the axis of the rudder stock on that waterline, if that length is greater. In vessels designed with rake of keel the waterline on which this length is measured should be parallel to the designed waterline;

.8 "Forward and after perpendiculars" should be taken at the forward and after ends of the length (L). The forward perpendicular should be coincident with the foreside of the stem on the waterline on which the length is measured;[1]

.9 "Breadth (B)"* is the maximum breadth of the vessel, measured amidships to the moulded line of the frame in a vessel with a metal shell and to the outer surface of the hull in a vessel with a shell of any other material;

.10 "Least depth (D)"* is the depth measured from the keel line to the top of the working deck beam at side. Where the working deck is stepped and the raised part of the deck extends over the point at which the least depth is to be determined, the least depth should be measured to a line of reference extending from the lower part of the deck along a line parallel with the raised part;

.11 "Freeboard (*f*)" is the actual minimum freeboard and is the distance from the underside of the working deck at the side to a water-line, measured perpendicularly to the water-line, plus the minimum thickness of decking. When the working deck is stepped, the lowest line of the deck and the continuation of that line parallel to the upper part of the deck is to be taken as the working deck*.

.12 "Deepest operating waterline" is the waterline related to the maximum permissible operating draft;

.13 "Amidships" means the mid-length of L;

.14 "Midship section" is that section of the hull defined by the intersection of the moulded surface of the hull with a vertical plane perpendicular to the waterline and centreline plane passing through amidships;[2]

.15 "Keel line" is the line parallel to the slope of keel passing amidships through:

.1 the top of the keel or line of intersection of the inside of shell plating with the keel where a bar keel extends above that line of a vessel with a metal shell; or

---

* Dimensions are illustrated in the Annex and when using length, breadth, depth or other dimensions for the purpose of stability examination in accordance with the guidance given in Chapter IV of Part B of the Code of Safety for Fishermen and Fishing Vessels, the definitions in that part apply.

[1] Drawn from the Protocol I.2 (6)

* Drawn from paragraph 1.2.1 (xix) of the existing Code.

[2] Drawn from the Protocol I.2 (12)

.2 the rabbet lower line of the keel of a vessel with a shell of wood or a composite material; or

.3 the intersection of a fair extension of the outside of the shell contour at the bottom with the centreline of a vessel with a shell of material other than wood and metal;[3]

.16 "Baseline" is the horizontal line intersecting at amidships the keel line;[4]

.17 "Working deck" is generally the lowest complete deck above the deepest operating waterline from which fishing is undertaken. In vessels fitted with two or more complete decks, the competent authority may accept a lower deck as a working deck provided that that deck is situated above the deepest operating waterline;

.18 "Deck erection" is any decked structure on the working deck;

.19 "Enclosed superstructure" is a superstructure with:

.1 enclosing bulkheads of efficient construction;

.2 access openings, if any, in those bulkheads fitted with permanently attached weathertight doors of a strength equivalent to the unpierced structure which can be operated from each side; and

.3 other openings in sides or ends of the superstructure fitted with efficient weathertight means of closing.

A raised quarter-deck is regarded as a superstructure.

A bridge or poop should not be regarded as enclosed unless access is provided for the crew to reach machinery and other working spaces inside those superstructures by alternative means which are available at all times when bulkhead openings are closed;

.20 "Superstructure deck" is that complete or partial deck forming the top of a deck erection situated at a height of not less than 1.8 m above the working deck. Where this height is less than 1.8 m, the top of such deck erections should be treated in the same way as the working deck;

.21 "Height of a superstructure or other erection" is the least vertical distance measured at side from the top of the deck beams of a superstructure or an erection to the top of the working deck beams;

.22 "Weathertight" means that in any sea conditions water will not penetrate into the vessel;

[3] Drawn from the Protocol I.2 (13)
[4] Drawn from the Protocol I.2 (14)

.23 "Watertight" means capable of preventing the passage of water through the structure in any direction under a head of water for which the surrounding structure is designed;

.24 "Collision bulkhead" is a watertight bulkhead up to the working deck in the fore part of the vessel as approved by the competent authority;* and

.25 "Bow height" is defined as the vertical distance at the forward perpendicular between the waterline corresponding to the maximum permissible draught and the designed trim and the top of the exposed deck at side;

.26 "Organization" means the International Maritime Organization;

.27 "Approved" means approved by the competent authority;

.28 “Machinery spaces of category A” are those spaces which contain internal combustion type machinery used either:

(a) for main propulsion; or

(b) for other purposes where such machinery has in the aggregate a total power output of not less than 750 kW,

or which contains any oil-fired boiler oil unit; and

.29 “Steel or other equivalent material” means steel or any material which, by itself or due to insulation provided, has structural and integrity properties equivalent to steel at the end of the applicable fire exposure to the standard fires test (e.g. aluminium alloy with appropriate insulation).

1.3 Maintenance, upkeep and surveys

1.3.1 The hull, machinery, equipment and radio installations as well as crew accommodation of every vessel should be constructed and installed so as to be capable of being regularly maintained to ensure that they are at all times, in all respects, satisfactory for the vessel's intended service.

1.3.2 Where practicable, the competent authority should arrange for appropriate surveys of a vessel during construction and, at regular intervals after completion, to ensure satisfactory condition of the vessel's hull, machinery, equipment, radio installations equipment and radio installations as well as crew accommodation. An appropriate report of the survey should be entered in the record of the vessel.

1.3.3 After any survey has been completed no change should be made in the structural arrangements, machinery, equipment, and radio installations as well as crew accommodation etc., covered by the survey, without the approval of the competent authority.

* Refer to regulation I/2(22) of the Protocol

1.3.4 Documentation relating to the safety of the vessel should cease to be valid upon transfer of the vessel to the flag of another State. New safety documentation should only be issued when the competent authority is fully satisfied that the vessel is in compliance with the requirements of the relevant provisions.

1.4 Equivalents

Where the present provisions require that a particular fitting, material, appliance or apparatus, or type thereof, should be fitted or carried in a vessel, or that any particular provision should be made, the competent authority may allow any other fitting, material, appliance or apparatus, or type thereof, to be fitted or carried, or any other provision to be made in that vessel, if it is satisfied by trial thereof or otherwise that such fitting, material, appliance or apparatus, or type thereof, or provision, is at least as effective as that required by the present provisions.*

* Refer to regulation I/4(1) of the Protocol

CHAPTER 5

FIRE PROTECTION, FIRE DETECTION, FIRE EXTINCTION, AND FIRE FIGHTING

5.1 Structure

5.1.1 If steel decks or steel bulkheads in accommodation form the top or side of a fuel oil tank, they should be coated with a non-combustible material of minimum thickness 40 mm. Manholes or other openings to fuel oil tanks should not be positioned in the accommodation.

5.1.2 External bulkheads and vessel's sides, which delimit the accommodation spaces, should be insulated with at least 50 mm insulating material. Bulkheads between accommodation spaces and machinery spaces or cargo spaces should be insulated with a non-combustible material of minimum thickness 40 mm and with density to the satisfaction of the competent authority. In wooden vessels, they can be built of two layers of wood with two layers of felt or similar in between or of 60 mm wood with a lining of insulating plates or alternatively be constructed to "B-15" class standard. The surface of insulation fitted on the internal boundaries of the machinery spaces of category A and in spaces into which oil products may penetrate should be impervious to oil or oil vapours.

5.1.3 All insulation in accommodation spaces and the wheelhouse should be made of non-combustible materials. Combustible insulation fitted in spaces used for the storage or processing of fish should be protected by a tight non-combustible covering.

5.1.4 Where there is a door between the accommodation space and the machinery space, this should be a self-closing door of steel or equivalent. Doors between galley rooms and dining rooms might be permitted, provided they are made of fire-retardant material; the same applies to a serving hatch. Where only electric cooking appliances are used in the galley, the galley and the mess room could be seen as one common room, divided into two appropriate compartments.

5.2 Ventilation systems

5.2.1 With the exception of what may ensue from paragraph 5.3, there should be means for stopping the ventilators and closing the main openings in the ventilation system from a location outside the rooms being served.

5.2.2 Ventilation openings can be permitted in and under the doors in corridor bulkheads, although such openings should not be permitted in and under doors to staircases. The openings should only be positioned in the lower half of a door. Where such an opening is positioned in or under a door, the total net area of the opening(s) should not exceed 0.05 m^2. If such an opening is cut into a door, it should be provided with a grating of non-combustible material.

5.2.3 Ventilation ducts to machinery spaces or galleys should not normally be conducted through accommodation, service rooms, or control rooms. If the competent authority, however, permits such an arrangement, the ducts should be made of steel or equivalent material and arranged so as to maintain the fire protection of the subdivisions.

5.2.4 Ventilation ducts to accommodation, service rooms, or control rooms should not normally be conducted through machinery spaces of category A or through galleys. If the competent authority, however, permits such an arrangement, the ducts should be made of steel or equivalent material and arranged so as to maintain the fire protection of the subdivisions.

5.2.5 Storerooms, containing appreciable quantities of highly flammable products should be provided with ventilation arrangements, which are separate from other ventilation systems. Ventilation should be arranged at high and low levels and the inlets and outlets of ventilators should be positioned in safe areas. Suitable wire mesh guards to arrest sparks should be fitted over inlet and outlet ventilation openings. Such ventilation systems should not exhaust in close proximity to the inlets of other ventilation systems.

5.2.6 Ventilation systems, which serve machinery spaces, should be independent of systems serving other rooms.

5.3 Heating installations

5.3.1 Where fitted, electric radiators should be fixed in position and so constructed as to reduce fire risks to a minimum. No such radiator should be fitted with an element so exposed that clothing, curtains, or other similar materials can be scorched or set on fire by heat from the element or direct heat from the element should not be accepted by the competent authority.

5.3.2 Heating stoves and other similar appliances should be firmly permanent secured and there should be adequate protection and insulation against fire below and around such appliances and their flues. Uptakes of stoves, which burn solid fuel, should be positioned and executed so as to minimise the possibility of becoming blocked with flammable substances, and they should have adequate means for cleaning. Dampers to limit draught in the boiler flues should, when closed, always leave an adequate area open. Rooms in which furnaces are installed should be provided with ventilators of an adequate area to provide the furnace with the necessary combustion air.

5.3.3 Open flame gas appliances, except cooking stoves and water heaters, should not be permitted. Spaces containing any such stoves or water heaters should have suitable ventilation in order to remove vapours and any gas leaks to a safe place. All pipes conveying gas from tank to stove or water heater should be made of steel or other approved material. Automatic safety gas shut-off devices should be fitted to operate on loss of pressure in the main gas pipe or failure of the pilot flame in any appliance.

5.3.4 Where gaseous fuel is used for domestic purposes, the arrangements, distribution, and storage of the fuel should be to the satisfaction of the competent authority and comply with the provisions of 5.5.5.

5.3.5 Where gas appliances are used for domestic purposes and where such gas supplies are stored, hydrocarbon sensors should be fitted in appropriate locations to give warning of the leakage of gas.

5.4 Miscellaneous items

5.4.1 Exposed surfaces within accommodation spaces, service spaces, control stations, corridor and stairway enclosures and the concealed surfaces behind bulkheads, ceilings, panellings and linings in accommodation spaces, service spaces and control station should have low flame-spread characteristics, or to be of fire-retardant materials to the satisfaction of the competent authority.*

* See the Guidelines on the Evaluation of Fire Properties of Materials adopted by the Organization by resolution A.166(ES.IV) and the Recommendation on Improved Fire Test Procedures for Surface Flammability of Bulkhead, Ceiling and Deck Finish Materials adopted by the Organization by resolution A.653(16).

5.4.2 All exposed surfaces of glass reinforced plastic construction within accommodation and service spaces, control stations, machinery spaces of category A and other machinery spaces of similar fire risk should have the final lay-up layer of approved resin having inherent fire-retardant properties or be coated with an approved fire-retardant paint or be protected by non-combustible materials.

5.4.3 Primary deck coverings within accommodation and service spaces and control stations should be of approved material which will not readily ignite or give rise to toxic or explosive hazards at elevated temperatures. This should be determined in accordance with the Fire Test Procedures Code.

5.4.4 In accommodation and service rooms and in control rooms, pipes, which penetrate fire integrated subdivisions should be made of approved material, taking into account the temperatures such subdivisions should be able to withstand. If the competent authority permits pipes carrying oil and flammable liquids to pass through accommodation and service rooms, the pipes should be of approved material, taking account of the fire hazard.

5.4.5 Materials, such as plastic or similar, which are readily rendered ineffective by heat should not be used for overboard scuppers, sanitary discharges and other outlets which are close to the water line and where the failure of the material in the event of fire would give rise to danger of flooding.

5.4.6 Short flexible piping connections may be accepted on sea water lines where the flexible connections are of a material that is not easily rendered ineffective by heat.

5.4.7 Flexible piping connections may be accepted for pipes transporting oil but the length of the connections should be carefully adapted to withstand the effects of vibrations. The connections should be resistant to oil, reinforced and of a material that is not easily rendered ineffective by heat.

5.4.8 All waste containers, with the exception of those, which are used in connection with the treatment of fish, should be made of non-flammable material without openings in the sides or base.

5.4.9 In the event of a fire in a space containing machinery, which operates fuel oil transfer pumps, fuel oil pumps and other similar fuel pumps, it should be possible to stop the machinery from a location outside the machinery space in question.

5.4.10 Drip pans should be fitted, where necessary, to prevent oils leaking into the bilge.

5.5 Storage of gas cylinders and dangerous materials

5.5.1 Cylinders for compressed, liquid or dissolved gases should be carefully secured and clearly marked, using the prescribed identity colours, with a clear, legible identification of the name and chemical formula of their contents and properly secured to the cylinder.

5.5.2 Cylinders, which contain flammable or other dangerous gases, and empty containers, should be stored, suitably secured, on the open deck, and all valves, pressure regulators and pipes leading from such containers should be protected against damage. Cylinders should be protected against extreme changes in temperature, direct rays of the sun and accumulation of snow. However, the competent authority may permit such containers to be stored in compartments complying with the provisions in 5.5.3 to 5.5.5.

5.5.3 Spaces containing liquid gas and highly flammable liquids such as volatile paints, paraffin, benzole, etc. should have direct access from open decks only. Pressure adjusting devices and relief valves should exhaust within the compartment. Where boundary bulkheads of such compartments adjoin other enclosed spaces, they should be gas tight.

5.5.4 Except as necessary for services within the space, electrical wiring and fittings should not be permitted within compartments used for the storage of highly flammable liquids or liquid gases. Where such electrical fittings are installed, they should be to the satisfaction of the competent authority for use in a flammable atmosphere. Sources of heat should be kept clear of such rooms, and "Smoking prohibited" and "Naked flames prohibited" notices should be affixed in a prominent position.

5.5.5 Separate storage rooms should be provided for each individual type of compressed gas. Rooms, which are used for storage of such gases, should not be used for storage of other flammable substances not for tools or items, which constitute a part of the gas distribution system. However, the competent authority may consider alternative arrangements taking into consideration the size and configuration of the vessel as well as the character, volume and intended use of such compressed gases.

5.6 Means of escape

5.6.1 Stairways and ladders leading to and from all crew rooms and spaces in which members of the crew normally are employed should be so arranged as to provide ready means of escape to the open deck and thence to the survival craft.

5.6.2 In accommodation spaces, there should be two exit possibilities from each large room or group of rooms and the exits should be positioned as possible from each other.

5.6.3 Exceptionally the competent authority may grant exemption from one of the exits and means of escape taking account of the location of the room and the number of persons who will normally be accommodated in the room and the configuration of the vessel.

5.6.4 Below the weather deck, the main exit should be a stairway, and the second exit can be considered as an emergency exit. Above weather decks, the exits should be stairways or through doors to the open deck or a combination thereof.

5.6.5 Two means of escape should be provided from every machinery space of category A which should be as widely separated as possible. Vertical escapes should be by means of steel ladders. Where the size or configuration of the machinery spaces make it impracticable one of these means of escape may be omitted. In such cases special consideration should be given to the remaining exit.

5.7 Automatic fire alarm and fire detection systems

5.7.1 In fishing vessels, between 15 and 24 m in length, which are of flammable construction, or where in other respects considerable quantities of flammable materials are used in the fitting out of accommodation, service rooms and control rooms, it should be carefully considered, whether an automatic fire detection and alarm system should be installed in these rooms, taking into account the size of the rooms, lay-out and location in relation to control rooms, and, where relevant, the flame propagation properties of the installed furniture.

5.7.2 Machinery spaces containing propelling machinery should be provided with suitable alarm and fire detection systems.

5.8 Fire pumps – number, capacity and location

5.8.1 Fishing vessels should be provided with at least 1 mechanically-driven fire pump. Depending on the service area, the competent authority may however require an emergency fire pump.

5.8.2 Sanitary, ballast and general service pumps might be approved as fire pumps, provided that they are mechanically driven and not normally used for pumping oil and that, if they are occasionally used for pumping oil, they have suitable switching devices such that the pumps cannot, even accidentally, be activated to suck from tanks, which may be used for substances other than ballast water, and/or from the vessel's bilge system and simultaneously provide pressure to the vessel's fire hydrant. Such arrangements based on blanking off certain pipelines by using blind flanges should not be approved.

5.8.3 Where pumps that are not dedicated fire pumps are authorized for use as a fire pump as provided for in paragraph 5.8.2, their use should not reduce the capability to pump bilges at any time.

5.8.4 When the pumps are used as fire pumps, they should only be able to supply the fire hydrant if only one is required or the fire main.

5.8.5 Where two or more pumps can be used as fire pumps they should be capable of operating in parallel provided that each can deliver the capacity set out in paragraph 5.8.8.

5.8.6 Where the requirements to the maximum permissible suction height can be complied with, the emergency pump could be portable provided that it is driven by a diesel-engine with independent fuel oil supply and the necessary reserve fuel oil. The portable emergency fire pump should be tested at least every month, and the necessary tools for start, suction, connection of hoses, etc. should be positioned close to the pump. Pumps that require priming should be provided with a funnel and shutoff valve.

5.8.7 The capacity Q of a fire pump should be at least in accordance with the calculation method below, however, in no case less than $16 m^3/h$.

$$Q = \left(0.15\sqrt{L(B+D)} + 2.25\right)^2 \ m^3/h$$

where L, B and D are in metres

The capacity for a fire-extinguishing pump need not exceed $30\ m^3/h$.

5.8.8 Main fire pumps should be able to maintain a pressure of at least $0.25\ N/mm^2$ at the fire plugs when the two fire plugs farthest away from the pump are both in operation and each fitted with a single hose length with a 12 mm spraying nozzle.

5.8.9 Where fixed or portable power operated emergency fire pumps are delivering the maximum quantity of water through the jet required by 5.10.1, the pressure maintained at any hydrant should be to the satisfaction of the competent authority.

5.8.10 The engine for diesel-driven emergency pumps should have a service tank with sufficient fuel oil for at least 3 hours' operation at full load, and there should be reserves for a further 15 hours' operation outside the machinery space.

5.8.11 Power to electrically driven emergency pumps should be supplied from an energy source that is independent of installations in the main machinery space and such arrangements should be to the satisfaction of the competent authority.

5.8.12 Fire pumps, including emergency fire pumps, should not be positioned or stored forward of the forepeak bulkhead or its extension.

5.8.13 The sea-valves of fire pumps and other necessary valves should be located so that a fire in any other place than in the space where the pump is located will not prevent the use of the pump.

5.8.14 The pump's total suction height should not exceed 4.5 m (suction height + pipe resistance) under all conditions of heel and trim, which the vessel may be assumed to meet with during navigation.

5.8.15 All permanently installed fire pumps should be provided with a check valve and a non-return valve on the discharge side.

5.8.16 If the fire pumps are capable of developing a pressure in excess of the maximum permitted working pressure of the pipelines, fire hydrant or fire hoses or render flexible hoses uncontrollable, should be provided with safety valves to prevent harmful overpressure.

5.9 Fire mains

5.9.1 Where more than one hydrant is required to provide the number of jets required by 5.10.1, a fire main should be provided.

5.9.2 The maximum pressure at a fire hydrant should not exceed the pressure at which a fire hose can be effectively handled by one crew member.

5.9.3 Fire mains should be made of steel or other equivalent material, which does not easily render it ineffective under the effect of heat.

5.9.4 The fire mains should be laid so as to minimise the risk of mechanical damage to the pipes.

5.9.5 Where there is a risk of frost damage, measures should be taken to avoid such damage.

5.9.6 It should be possible to close off the fire main from a machinery space and from an easily accessible position outside that machinery space.

5.10 Fire hydrants, fire hoses and nozzles

5.10.1 Fire hydrants should be positioned such that they allow easy and rapid connection of fire hoses and such that at least one water jet can be directed towards any part of the vessel, which is normally accessible during navigation.

5.10.2 The water jet required in 5.10.1 should come from a single length fire hose.

5.10.3 In addition to the requirement of 5.10.1, machinery spaces should normally be equipped with at least one fire hydrant, complete with fire hose and combination nozzle (spray/jet). This fire hydrant should be positioned outside the space and close to the entrance.

5.10.4 There should be one fire hose for each prescribed fire hydrant. In addition at least one extra fire hose should be available.

5.10.5 The length of individual fire hoses should not exceed 20 m.

5.10.6 Fire hoses should be of approved material. Each fire hose should be provided with couplings and a dual purpose nozzle.

5.10.7 With the exception of cases where fire hoses are permanently connected to the main fire hydrant, the couplings on fire hoses and nozzles should be completely interchangeable.

5.10.8 The nozzles prescribed in point 5.10.6 should match the performance standard of the fire pumps installed, but should not in any case have a diameter of less than 12 mm.

5.11 Fire extinguishers*

5.11.1 Fire extinguishers should be of approved types. The capacity of required portable fluid extinguishers should be not more than 13.5 *l* and not less than 9 *l*. Other extinguishers should not be in excess of the equivalent portability of the 13.5 *l* fluid extinguisher and should not be less than the fire-extinguishing equivalent of a 9 *l* fluid extinguisher. The competent authority should determine the equivalents of fire extinguishers.

5.11.2. Spare charges should be provided to the satisfaction of the competent authority.

5.11.3 Fire extinguishers containing an extinguishing medium, which, in the opinion of the competent authority, either by itself or under expected conditions of use, gives off toxic gases in such quantities as to endanger persons should not be permitted.

5.11.4 Fire extinguishers should be periodically examined and subjected to such tests as the competent authority may require.

5.11.5 Normally, one of the portable fire extinguishers intended for use in any space should be stowed near an entrance to that space.

5.12 Portable fire extinguishers

5.12.1 A sufficient number of approved portable fire extinguishers should be provided in control stations and accommodation and service spaces to ensure that at least one extinguisher of a suitable type is readily available for use in any part of such spaces. A total number of extinguishers in these spaces should be to the satisfaction of the competent authority.

* See the Improved Guidelines for Marine Portable Fire Extinguishers adopted by the Organization by resolution A.951(23)

5.12.2 Spare charges should be provided to the satisfaction of the competent authority.

5.13 Fire-fighting installations in machinery spaces

5.13.1 Vessels should be provided with suitable installations and equipment for the detection and fighting of fire.

5.13.2 Spaces containing main propelling machinery, internal combustion machinery with a total power output of 750 kW and more, oil-fired boilers, including central heating boilers, incinerators and fuel oil aggregates, should be provided with one of the following fixed fire extinguishing systems, to the satisfaction of the competent authority:

.1 a pressure water-spraying installation that may be supplied from a manually operated pump or another means of pressurizing the system;

.2 a fire-smothering gas installation; and

.3 a fire-extinguishing installation using high expansion foam.

5.13.3 New installations of halogenated hydrocarbon systems used, as fire-extinguishing media should be prohibited on new and existing vessels.

5.13.4 Where the engine and boiler rooms are not entirely separated from each other or if fuel oil can drain from the boiler room into the engine room, the combined engine and boiler rooms should be considered as one compartment.

5.13.5 Installations listed in paragraph 5.13.2 should be controlled from readily accessible positions outside such spaces not likely to be cut off by a fire in the protected space. Arrangements should be made to ensure the supply of power and water necessary for the operation of the system in the event of fire in the protected space.

5.13.6 Vessels which are mainly or completely built of wood or glass-fibre reinforced polyester and equipped with oil-fired boilers or internal combustion engines which, in terms of the machinery space, are covered with such material, should be equipped with one of the extinguishing systems referred to in 5.13.2.

5.14 Ready availability of fire-extinguishing appliances

Fire–extinguishing appliances should be kept in good order and continuously available for immediate use at all times when the vessel is in service.

5.15 Equivalence

Where in this chapter any special type of appliance, apparatus, extinguishing medium or arrangement is specified, any other type of appliance etc. may be allowed provided that the competent authority is satisfied that it is not less effective.

***

ANNEX 6

DRAFT MSC RESOLUTION

ADOPTION OF AMENDMENTS TO THE INTERNATIONAL CODE FOR APPLICATION OF FIRE TEST PROCEDURES

THE MARITIME SAFETY COMMITTEE,

RECALLING Article 28(b) of the Convention on the International Maritime Organization concerning the functions of the Committee,

RECALLING ALSO resolution MSC.61(67) by which it adopted the International Code for Application of Fire Test Procedures (FTP Code) for the testing of new marine materials which are increasingly being introduced into the design and construction of ships and craft engaged in international maritime transport,

NOTING article VIII(b) and regulation II-2/3.23 of the International Convention for the Safety of Life at Sea (SOLAS), 1974 (hereinafter referred to as "the Convention") concerning the procedure for amending the FTP Code,

RECOGNIZING that certain floor coverings which passed the sulphur dioxide gas concentration limit when tested under the non-analytical method failed when tested under the traceable results (analytical) method (MSC/Circ.916),

HAVING CONSIDERED, at its […] session, amendments to the FTP Code proposed and circulated in accordance with article VIII(b)(i) of the Convention,

1. ADOPTS, in accordance with article VIII(b)(iv) of the Convention, amendments to the FTP Code, the text of which is set out in the Annex to the present resolution;

2. DETERMINES, in accordance with article VIII(b)(vi)(2)(bb) of the Convention, that the amendments shall be deemed to have been accepted on […], unless, prior to that date, more than one third of the Contracting Governments to the Convention or Contracting Governments the combined merchant fleets of which constitute not less than 50% of the gross tonnage of the world's merchant fleet, have notified their objections to the amendments;

3. INVITES Contracting Governments to note that, in accordance with article VIII(b)(vii)(2) of the Convention, the amendments shall enter into force on […] upon their acceptance in accordance with paragraph 2 above;

4. REQUESTS the Secretary-General, in conformity with article VIII(b)(v) of the Convention, to transmit certified copies of the present resolution and the text of the amendments contained in the Annex to all Contracting Governments to the Convention;

5. FURTHER REQUESTS the Secretary-General to transmit copies of this resolution and its Annex to Members of the Organization, which are not Contracting Governments to the Convention.

ANNEX

AMENDMENTS TO THE INTERNATIONAL CODE FOR APPLICATION OF FIRE TEST PROCEDURES (FTP CODE)

ANNEX 1 – FIRE TEST PROCEDURES

Part 2 – Smoke and toxicity test

2.6 Classification criteria

2.6.2 Toxicity

In the table of limits, the following text is added after the entry "SO_2 120 ppm":

"(200 ppm for floor coverings)"

***

ANNEX 7

DRAFT REVISED FIRE CASUALTY RECORD

IMO MARINE CASUALTY AND INCIDENT REPORT [No…]

ANNEX [6] - FIRE CASUALTY RECORD*

In addition to supplying the information requested in this annex, Administrations are urged to also supply the information listed in other relevant annexes of MSC/Circ.953-MEPC/Circ.372, in particular the information contained in Annex 1 (ship identification and particulars).

1 Type of service:**

( ) International
( ) Short international
( ) Coastal sea trade
( ) Inland waters
( ) Other, please state:
( ) Not reported

2 Were any voyage related restriction limits placed on the ship?

3 Propelling machinery (type, fuel, etc.):

4 Nature of cargo (e.g. oil, dry bulk and goods under the IMDG Code):

5 Location (and condition) of ship**:

( ) Underway (latitude and longitude)
( ) In port - Loading
( ) In port - Unloading
( ) In port - Awaiting departure
( ) In port - Other
( ) Under repair (afloat or drydock)
( ) Others, please state:
( ) Not reported

6 Local conditions when fire was discovered:

.1 Time (local onboard) at which fire was discovered (Daylight or darkness):

.2 Wind force (Beaufort scale and direction):

.3 State of sea (and code used):

7 Part of ship where fire broke out:

8 Probable cause of fire:

---

* Data should be given as precisely as possible.
** A '✓' is to be inserted, as appropriate.

.1 Briefly describe on board activities that were contributing factors (cargo operations, maintenance, hot work, etc.):

.2 Probable cause of ignition:

9 Number of persons on board when fire was first detected:

.1 Passengers:

.2 Crew and supernumeraries:

.3 Other persons (maintenance, repairs, shore personnel, services, etc.)

10 Explain how persons onboard were alerted:

11 Means by which fire was initially detected:*

( ) Fixed fire detection system
( ) By ships crew or passenger
( ) Not known

12 Briefly, describe the performance of structural fire protection (fire resisting and fire retarding bulkheads, doors, decks, etc.) with respect to:

.1 Containment and extinguishment of any fire in the space of origin:

.2 Protection of means of escape or access for fire fighting:

.3 Adequacy of structural fire protection:

13 Ship's portable fire-extinguishing equipment used (foam, dry chemical, CO_2, water, etc.):

14 Fixed fire-extinguishing installations:

.1 At site of origin of fire (specify the type):

.2 Adjacent areas (specify the type):

.3 Fixed fire-extinguishing systems used in an attempt to extinguish the fire:

.4 Did the use of fixed fire-extinguishing systems contribute to the extinguishment of the fire?

15 Briefly explain the action taken by the crew to contain, control and suppress fire and explosion in the space of origin:

* A '✓' is to be inserted, as appropriate.

16 Was outside assistance provided (e.g. fire department, other ship, etc.) and, if so, what equipment was used:

17 Determine qualifications and training of all ship's crew involved in the incident, not only the fire-fighting operations, but also any related actions that may have contributed to the fire (see item 8):

18 Report on whether company or industry procedures, including hot work procedures, were in place and relevant to the operation concerned:

19 If the procedures were in place, were they correctly implemented?

20 Time taken to fight fire from first alarm:

.1 To control the fire:

.2 Once controlled, to extinguish the fire:

21 Total duration of fire:

22 Damage caused by fire:

.1 Loss of life, or injuries to personnel:

.2 To the cargo:

.3 To the ship:

.4 Release of pollutants:

23 Was there any failure of the fire-fighting equipment or systems when used?

If yes, were the equipment and/or system maintenance records up to date (e.g. servicing)?

24 Was there an adequate supply of air on board for self-contained breathing apparatus or was outside assistance needed to supply such air?

25 Observations and comments:

***

ANNEX 8

PROPOSED TERMS OF REFERENCE FOR THE SUB-COMMITTEE ON FIRE PROTECTION

In order to maintain and enhance the safety of shipping and related maritime operations against fire and explosions and for escape and evacuation, the Sub-Committee, under the direction of the Maritime Safety Committee and, as necessary, the Marine Environment Protection Committee, should:

.1 consider and develop fire safety and evacuation requirements for chapter II-2 of the 1974 SOLAS Convention, as amended, and other relevant mandatory and non-mandatory IMO instruments;

.2 consider and develop guidelines and standards for testing and approval of fire safety systems, equipment, constructions and materials and evacuation guidance and arrangements on board ships, craft and marine units;

.3 analyse fire casualty and incident records with a view to formulating applicable fire safety and evacuation requirements and recommendations to enhance the safety of shipping and related maritime operations;

.4 consider and develop relevant recommendations for the implementation of fire safety and evacuation requirements, guidelines and standards, taking into account the human element aspect; and

.5 act on any other issues referred to it by the Maritime Safety Committee, the Marine Environment Protection Committee or other technical bodies of the Organization.

***

ANNEX 9

PROPOSED REVISED WORK PROGRAMME OF THE SUB-COMMITTEE AND PROVISIONAL AGENDA FOR FP 49

PROPOSED REVISED WORK PROGRAMME OF THE SUB-COMMITTEE

		Target completion date/number of sessions needed for completion	Reference
1	**Analysis of fire casualty records**	Continuous	~~FSI 8/19, section 11;~~ ~~FP 47/16, section 4~~ FP 48/19, section 13
	~~.1~~ ~~**revision of the fire casualty record**~~	~~2004~~	~~MSC 75/24, paragraph 22.18;~~ ~~FP 47/16, paragraph 4.16~~
~~H.1~~	~~**Unified interpretations of SOLAS chapter II-2, the FSS Code and related fire test procedures**~~	~~2004~~	~~FP 43/18, paragraphs 5.7, 7.25 and 5.3.5.1;~~ ~~FP 47/16, section 3~~
~~H.2~~ H.1	**Large passenger ship safety**	~~2004~~ 2006	MSC 74/24, paragraph 21.4; ~~FP 47/16, section 7~~ FP 48/19, section 4
~~H.3~~	~~**Revision of the fishing vessel Safety Code and Voluntary Guidelines**~~ ~~(co-ordinated by SLF)~~	~~2004~~	~~MSC 74/24, paragraph 21.5;~~ ~~FP 47/16, section 6~~
~~H.4~~ H.2	**Performance testing and approval standards for fire safety systems**	2005	MSC 74/24, paragraph 21.12; ~~FP 47/16, section 8~~ FP 48/19, section 5
~~H.5~~	~~**Revision of the gas concentration limit on sulphur dioxide for floor coverings**~~	~~2004~~	~~MSC 75/24, paragraph 22.21;~~ ~~FP 47/16, section 10~~

Notes: 1 "H" means a high priority item and "L" means a low priority item. However, within the high and low priority groups, items have not been listed in any order of priority.
2 Struck-out text indicates proposed deletions and the shaded text shows proposed additions or changes.
3 Items printed in bold letters have been selected for the provisional agenda for FP 49.

		Target completion date/number of sessions needed for completion	Reference
~~H.8~~ H.3	**Review of the 2000 HSC Code and amendments to the DSC Code and the 1994 HSC Code**	2005	MSC 76/23, paragraphs 8.19 and 20.4; ~~FP 47/16, paragraph 13.3.3.2~~ FP 48/19, section 10
~~H.11~~ H.4	**Amendments to resolution A.653(16) relating to ~~the procedure for~~ the preparation of specimens ~~of~~ for sealants and mastics ~~(resolution A.653(16))~~**	2005	MSC 77/26, paragraph 23.13 FP 48/19, section 15
~~H.10~~ H.5	**Amendments to resolution A.754(18) relating to performance criteria for fire doors**	2005	MSC 77/26, paragraph 23.12 FP 48/19, section 14
~~H.6~~ H.6	**Review of the fire protection provisions of the ~~OSV~~ LHNS Guidelines** ~~(co-ordinated by DE)~~	2006	MSC 75/24, paragraph 22.4; ~~FP 47/16, paragraph 13.3.3.1~~ FP 48/19, section 8
~~H.7~~ H.7	**~~Use of directional sound for passenger evacuation~~ Performance standards for evacuation guidance systems**	~~2004~~ 2006	MSC 75/24, paragraph 22.19; ~~FP 47/16, section 11~~ FP 48/19, section9
~~L.1~~ H.8	**Recommendation on evacuation analysis for new and existing passenger ships**	2005	MSC 73/21, paragraph 4.16; ~~FP 47/16, paragraph 13.3.3.3~~ FP 48/19, section 12
~~H.9~~	**Consideration of IACS unified interpretations**	~~2004~~	~~MSC 76/23, paragraph 20.3; FP 47/16, section 12~~
~~L.2~~ L.1	Smoke control and ventilation	2 sessions	FP 39/19, section 9; FP 46/16, section 4

PROPOSED PROVISIONAL AGENDA FOR FP 49*

Opening of the session

1 Adoption of the agenda

2 Decisions of other IMO bodies

3 Large passenger ship safety

4 Performance testing and approval standards for fire safety systems

5 Review of the 2000 HSC Code and amendments to the DSC Code and the 1994 HSC Code

6 Amendments to resolution A.653(16) relating to the preparation of specimens for sealants and mastics

7 Amendments to resolution A.754(18) relating to performance criteria for fire doors

8 Review of the fire protection provisions of the LHNS Guidelines

9 Performance standards for evacuation guidance systems

10 Recommendation on evacuation analysis for new and existing passenger ships

11 Analysis of fire casualty records**

12 Work programme and agenda for FP 50

13 Election of Chairman and Vice-Chairman for 2006

14 Any other business

15 Report to the Maritime Safety Committee

---

* Agenda item numbers do not necessarily indicate priority.
** Items under continuous review.