INTERNATIONAL MARITIME ORGANIZATION

IMO

E

SUB-COMMITTEE ON FIRE PROTECTION
46th session
Agenda item 16

FP 46/16
12 February 2002
Original: ENGLISH

REPORT TO THE MARITIME SAFETY COMMITTEE

Table of contents

Section		Page
1	GENERAL	3
2	DECISIONS OF OTHER IMO BODIES	4
3	RECOMMENDATION ON EVACUATION ANALYSIS FOR NEW AND EXISTING PASSENGER SHIPS	5
4	SMOKE CONTROL AND VENTILATION	11
5	UNIFIED INTERPRETATIONS OF SOLAS CHAPTER II-2 AND RELATED FIRE TEST PROCEDURES	13
6	DEVELOPMENT OF GUIDELINES FOR SHIPS OPERATING IN ARCTIC ICE-COVERED WATERS	18
7	ANALYSIS OF FIRE CASUALTY RECORDS	19
8	REVISION OF RESOLUTION A.654(16)	25
9	REVISION OF RESOLUTION A.602(15)	26
10	REVISION OF THE FISHING VESSEL SAFETY CODE AND VOLUNTARY GUIDELINES	27
11	LARGE PASSENGER SHIP SAFETY	28
12	PERFORMANCE TESTING AND APPROVAL STANDARDS FOR FIRE SAFETY SYSTEMS	30
13	WORK PROGRAMME AND AGENDA FOR FP 47	31
14	ELECTION OF CHAIRMAN AND VICE-CHAIRMAN FOR 2003	33
15	ANY OTHER BUSINESS	33
16	ACTION REQUESTED OF THE COMMITTEE	36

For reasons of economy, this document is printed in a limited number. Delegates are kindly asked to bring their copies to meetings and not to request additional copies.

LIST OF ANNEXES

ANNEX 1 AGENDA FOR THE FORTY-SIXTH SESSION INCLUDING A LIST OF DOCUMENTS

ANNEX 2 DRAFT MSC CIRCULAR ON INTERIM GUIDELINES FOR EVACUATION ANALYSES FOR NEW AND EXISTING PASSENGER SHIPS

ANNEX 3 DRAFT MSC CIRCULAR ON GUIDELINES FOR SMOKE CONTROL AND VENTILATION SYSTEMS FOR INTERNAL ASSEMBLY STATIONS AND ATRIUMS ON NEW PASSENGER SHIPS

ANNEX 4 DRAFT MSC CIRCULAR ON GUIDELINES FOR THE USE AND INSTALLATION OF DETECTORS EQUIVALENT TO SMOKE DETECTORS

ANNEX 5 DRAFT MSC CIRCULAR ON UNIFIED INTERPRETATIONS OF THE INTERNATIONAL CODE FOR THE APPLICATION OF FIRE TEST PROCEDURES (FTP CODE) AND FIRE TEST PROCEDURES REFERRED TO IN THE CODE

ANNEX 6 CORRECTION OF ERRORS IN THE REVISED SOLAS CHAPTER II-2

ANNEX 7 UNIFIED INTERPRETATIONS OF THE REVISED SOLAS CHAPTER II-2

ANNEX 8 DRAFT MSC CIRCULAR ON PREPARATION OF SHIPBOARD FIRE CONTROL PLANS

ANNEX 9 DRAFT ASSEMBLY RESOLUTION ON IMPROVED GUIDELINES FOR MARINE PORTABLE FIRE EXTINGUISHERS

ANNEX 10 PROPOSED REVISED WORK PROGRAMME OF THE SUB-COMMITTEE AND DRAFT PROVISIONAL AGENDA FOR FP 47

ANNEX 11 PROPOSED MODIFICATIONS TO THE DRAFT AMENDMENTS TO THE REVISED SOLAS CHAPTER II-2 PREPARED BY DSC 6

1 GENERAL

1.1 The Sub-Committee held its forty-sixth session from 4 to 8 February 2002 under the chairmanship of Mr. K. Yoshida (Japan).

1.2 The session was attended by delegations from the following Member Governments:

ARGENTINA
BAHAMAS
BANGLADESH
BELGIUM
BRAZIL
CANADA
CHILE
CHINA
CROATIA
CUBA
CYPRUS
DEMOCRATIC PEOPLE'S REPUBLIC OF KOREA
DENMARK
EGYPT
FINLAND
FRANCE
GERMANY
GREECE
INDONESIA
IRAN (ISLAMIC REPUBLIC OF)
ITALY
JAPAN
LATVIA
LIBERIA
MALTA
MEXICO
NETHERLANDS
NORWAY
PANAMA
PERU
PHILIPPINES
POLAND
PORTUGAL
REPUBLIC OF KOREA
ROMANIA
RUSSIAN FEDERATION
SAUDI ARABIA
SINGAPORE
SPAIN
SWEDEN
SYRIAN ARAB REPUBLIC
TURKEY
UKRAINE
UNITED KINGDOM
UNITED STATES
VENEZUELA

the following Associate Member of IMO:

HONG KONG, CHINA

and observers from the following non-governmental organizations:

INTERNATIONAL CHAMBER OF SHIPPING (ICS)
INTERNATIONAL ORGANIZATION FOR STANDARDIZATION (ISO)
INTERNATIONAL CONFEDERATION OF FREE TRADE UNIONS (ICFTU)
THE BALTIC AND INTERNATIONAL MARITIME COUNCIL (BIMCO)
INTERNATIONAL ASSOCIATION OF CLASSIFICATION SOCIETIES (IACS)
OIL COMPANIES INTERNATIONAL MARITIME FORUM (OCIMF)
INTERNATIONAL FEDERATION OF SHIPMASTERS' ASSOCIATION (IFSMA)
INTERNATIONAL ASSOCIATION OF INDEPENDENT TANKER OWNERS (INTERTANKO)
INTERNATIONAL COUNCIL OF CRUISE LINES (ICCL)
INTERNATIONAL ASSOCIATION OF DRY CARGO SHIPOWNERS (INTERCARGO)
THE INSTITUTE OF MARINE ENGINEERING, SCIENCE AND TECHNOLOGY (IMarEST)
WORLD NUCLEAR TRANSPORT INSTITUTE (WNTI)

1.3 The Secretary-General, in welcoming participants, referred to the approval by MSC 74 of the Guidelines on alternative design and arrangements for fire safety which are referred to in the revised SOLAS chapter II-2, considering this as an important achievement in IMO's continuous endeavours to provide up-to-date and as high as possible fire safety standards for both passenger and cargo ships. He noted that these guidelines will be used by ship designers to ensure that alternative designs are based on sound engineering analysis and provide equivalent or even a higher level of safety to that prescribed in the revised SOLAS chapter II-2.

In addressing the evacuation analysis for new and existing passenger ships, the Secretary-General expressed the hope that the guidelines would provide useful advice to passenger ship owners, operators and designers for conducting a proper evacuation analysis on new and existing passenger ships and, in particular, for dealing with emergencies involving large cruise ships. Recalling that the Sub-Committee had also been requested by the MSC to consider matters on large passenger ship safety, he emphasized the points he made when addressing this matter at the MSC, the Council and the Assembly, in particular, that the safety of the thousands of passengers who travel by sea for recreation or business as well as the crews who man the ships that carry them is of paramount importance and, therefore, deserves the Sub-Committee's fullest attention and care.

Referring to the revision of the fishing vessel Safety Code and Voluntary Guidelines, the Secretary-General reiterated the efforts already made by the Organization to establish adequate safety standards for fishing vessels, which culminated in the adoption of the 1993 Torremolinos Protocol for the Safety of Fishing Vessels, and expressed his confidence that the Sub-Committee would carry out the revision exercise in a timely and thorough manner.

Statement by the delegation of Spain

1.4 The delegation of Spain acknowledged the extraordinary work carried out by various maritime rescue services during the adverse weather conditions that had occurred in the previous few days and specifically mentioned the accidents to the fishing boats **Celestia Dawn** and **Le Parrain,** which had sunk in British and Irish waters respectively the day before. The delegation of Spain thanked and congratulated Ireland and the United Kingdom for the successful and difficult air rescue of 25 Spanish sailors from those boats which had been carried out by the maritime rescue services of both countries in extremely adverse weather conditions, saying that it also reflected the efforts that the Organization is making to increase the level of maritime safety for fishing fleets throughout the world, as mentioned by the Secretary-General in his opening speech to this Sub-Committee, in order to minimize the accident rate in the fishing sector. The Sub-Committee joined the delegation of Spain in their congratulations of the Ireland and the United Kingdom rescue services for their actions.

Adoption of the agenda

1.5 The Sub-Committee adopted the agenda (FP 46/1), which, together with a list of documents considered under each agenda item, is set out in annex 1. The Sub-Committee agreed, in general, to be guided in its work by the annotations contained in document FP 46/1/1.

2 DECISIONS OF OTHER IMO BODIES

2.1 The Sub-Committee noted the decisions of the Sub-Committee on Bulk Liquids and Gases (BLG) at its sixth session, the Sub-Committee on Flag State Implementation (FSI) at its ninth session, the Sub-Committee on Ship Design and Equipment (DE) at its forty-fourth session, the Marine Environment Protection Committee (MEPC) at its forty-sixth session, the Maritime

Safety Committee (MSC) at its seventy-fourth session, the Sub-Committee on Safety of Navigation (NAV) at its forty-seventh session, the Sub-Committee on Dangerous Goods, Solid Cargoes and Containers (DSC) at its sixth session and the Sub-Committee on Stability and Load Lines and on Fishing Vessels Safety (SLF) at its forty-fourth session (documents FP 46/2 and FP 46/2/1), and took them into account in its deliberations when dealing with relevant agenda items.

Revision of the SOLAS expression "ships constructed"

2.2 The Sub-Committee noted that MSC 74 had endorsed the opinion of FSI 9 that the SOLAS expression "ships constructed" should be revised so that it would be based on the principles of building contract and delivery dates similar to those in MARPOL regulation I/1(6) and paragraph 1.2 of the Unified Interpretations of provisions of MARPOL Annex I and that the revised expression should only apply to future amendments to SOLAS 74 which affect the design and construction of ships.

Outcome of DSC 6

2.3 The Sub-Committee noted the opinion of DSC 6 on matters related to the modification of carbon dioxide fire-extinguishing systems for seed cake cargoes (DSC 6/15, paragraphs 5.13 and 5.14) and decided to deal with this issue under agenda item 5 (see paragraphs 5.12 to 5.14).

2.4 The Sub-Committee also noted that DSC 6 had agreed to draft amendments to regulations 3.20 and 19 of the revised SOLAS chapter II-2, as set out in annex 9 to document DSC 6/15 and invited the FP Sub-Committee to concur with the aforementioned amendments for approval at MSC 75. The Sub-Committee decided to deal with this matter under agenda item 15 (see paragraphs 15.12 to 15.14).

2.5 Having noted the outcome of DSC 6 on the revision of the Emergency Schedules (EmS) (DSC 6/15, paragraphs 4.27 and 4.28), the Sub-Committee decided to deal with matters related to stowage conditions of water-reactive cargoes under agenda item 15 (see paragraphs 15.15 and 15.16).

3 RECOMMENDATION ON EVACUATION ANALYSIS FOR NEW AND EXISTING PASSENGER SHIPS

3.1 The Sub-Committee recalled that FP 45, having considered the reports of the working group (part 2) and the correspondence group established at FP 44, together with a number of documents submitted to the session and others referred to it by MSC 73, re-established the working group to address in more detail the issues discussed in plenary, to finalize the Guidelines on evacuation analysis for high-speed passenger craft and to further consider matters relating to guidelines for evaluation analysis on new and existing passenger ships.

3.2 The Sub-Committee also recalled that, having considered part 1 of the report of the working group established at that session, FP 45, *inter alia*:

.1 approved the draft Interim Guidelines for a simplified evacuation analysis of high-speed passenger craft;

.2 approved a plan of action regarding the application of evacuation analysis to existing passenger ships as instructed by MSC 73; and

.3 noted the progress made on the development of guidelines for evacuation analysis of new passenger ships.

3.3 The Sub-Committee further recalled that the Correspondence Group on Evacuation Analysis for New and Existing Passenger Ships was re-established at the last session and instructed to:

.1 continue reviewing the Interim Guidelines attached to MSC/Circ.909 with the aim of developing draft Guidelines for a simplified evacuation analysis of new passenger ships, including ro-ro passenger ships, taking into account the outcome of consideration of this matter by FP 45 and part 2 of the group's report when available;

.2 further progress the development of the guidance on the use of microscopic models, taking into account document FP 45/3/2 and part 2 of the group's report when available;

.3 develop guidance for validation of computerized models by the Administration; and

.4 continue considering the application of evacuation analysis to existing passenger ships according to the plan of action approved by FP 45 as set out in paragraph 3.17 of document FP 45/16.

Report of the working and correspondence groups

3.4 In considering part 2 of the working group's report (FP 46/3) and the comments and contributions of the Correspondence Group on Evacuation Analysis for New and Existing Passenger Ships established at FP 45 (FP 46/3/1), the Sub-Committee noted that the aforementioned groups had further developed the draft Guidelines for a simplified evacuation analysis for new and existing passenger ships and identified several aspects needing modifications, additional detail and/or elaboration to progress the work further.

3.5 The Sub-Committee noted that a performance standard for evacuation time is only recommended for ro-ro passenger ships and defined for high-speed passenger craft and agreed that the working group should develop a recommendation on evacuation time for non ro-ro passenger ships and for existing passenger ships (see paragraphs 3.19 and 3.20).

3.6 The Sub-Committee also noted that there are currently no provisions for an evacuation analysis for new or existing passenger ships, other than new ro-ro passenger ships, in any IMO instruments and decided to instruct the working group to prepare a recommendation on how the guidelines should be implemented, in particular to non ro-ro passenger ships and existing passenger ships, taking into account the comments and decisions made in plenary (see paragraphs 3.15 to 3.17).

Microscopic models and simulation tools

3.7 In considering the report of the correspondence group, the document submitted jointly by Germany and Norway (FP 46/3/2) and the documents submitted by Germany (FP 46/3/3 and FP 46/3/4), containing comments and proposals on the use of microscopic models and simulation tools, the Sub-Committee agreed that the working group should further consider these matters

with a view to preparing a recommendation on how and when to apply microscopic models and simulation tools (see paragraphs 3.11 to 3.14 and 3.18).

Other matters

3.8 The Sub-Committee noted the documents submitted by Germany (FP 46/INF.2), the Netherlands (FP 46/INF.3) and Japan (FP 46/INF.10) containing information on the latest evacuation analysis research and thanked the aforementioned delegations for this information.

Instructions to the working group

3.9 Having considered the documents submitted to the session and the comments made on the issue of evacuation analysis, the Sub-Committee established a working group and instructed it to:

.1 finalize the review of the Interim Guidelines attached to MSC/Circ.909 with the aim of developing draft Guidelines for a simplified evacuation analysis of passenger ships, including ro-ro passenger ships, taking into consideration the report of the correspondence group, the documents submitted to the session and the discussion in plenary;

.2 finalize matters related to the development of the basic guidance on the use of microscopic models, taking into account documents FP 46/3/3 and FP 46/3/4 and the discussion in plenary, and prepare a recommendation on how and when to apply microscopic models in lieu of the so called macroscopic (simplified) models;

.3 prepare a recommendation on how the Guidelines should be implemented and applied, in particular to non ro-ro passenger ships and existing passenger ships, taking into account the comments and decisions made in plenary;

.4 provide recommendations to the Sub-Committee concerning the evacuation time for non ro-ro passenger ships and for existing passenger ships, having regard to the discussion in plenary concerning large passenger ship safety;

.5 develop a draft MSC circular for the above Guidelines; and

.6 review the various proposals relating to the approval of simulation tools, taking into account document FP 46/3/2 and the discussion in plenary.

Report of the working group

3.10 Having received the report of the working group (FP 46/WP.2), the Sub-Committee approved the report in general and took action as outlined in the following paragraphs.

Simplified evacuation analysis of passenger ships

3.11 The Sub-Committee agreed to the draft Interim Guidelines for a simplified evacuation analysis of passenger ships (hereunder referred to as "simplified Guidelines"), as set out in annex 1 to annex 2 (see also paragraph 3.21).

Microscopic simulation

3.12 Noting that the group had discussed in depth the draft guidelines contained in document FP 46/3/3 using as background information the partial trial applications of evacuation analysis provided in document FP 46/3/4, as well as results of experience provided by the delegations of Japan, Sweden and the United Kingdom, where similar exercises had been carried out, the Sub-Committee agreed to the draft Interim Guidelines for the advanced evacuation analysis of new and existing passenger ships (hereunder referred to as "advanced Guidelines"), as provided in annex 2 to annex 2 (see also paragraph 3.21).

3.13 In considering both the aforementioned simplified and advanced Guidelines, the Sub-Committee concurred with the following recommendations made by the group:

.1 for the sake of ensuring uniformity of application, typical benchmark scenarios and relevant data are specified in the draft advanced Guidelines. Therefore, the aim of the analysis is to assess the performance of the ship in benchmark scenarios rather than simulating an actual emergency situation;

.2 although the advanced approach is, from a theoretical and mathematical point of view, sufficiently developed to deal with realistic simulations of evacuation on board ships, there is still a considerable gap in the amount of validation data and practical experience on its application. Such a gap, at present, does not allow the benchmark evacuation scenarios and their parameters to be defined in a more precise way than that achieved in the advanced Guidelines; and

.3 almost all the data and parameters given in the advanced Guidelines are based on well documented data derived from civil building experience. The data and results from ongoing research and development (e.g., documents FP 46/INF.3 and FP 46/INF.10) show the importance of such data for improving the advanced Guidelines and the current inconsistency of such data due to the fact that the necessary research and development is not yet completed.

3.14 For the above reasons, the Sub-Committee agreed that both the simplified and the advanced Guidelines, should be given interim status and that Member Governments should be requested to submit to the Sub-Committee, under the agenda item on "Any other business", any results of either research and development or trial applications as soon as available with the aim of improving further the Guidelines as and when appropriate.

Application of the Interim Guidelines to new passenger ships other than ro-ro passenger ships

3.15 The Sub-Committee noted that the group, after considering the matter in detail and having given due regard to the fact that, apart from the trial application developed for the purpose of providing a worked example to attach to the Interim Guidelines, there is no other experience available on conventional passenger ships, had reached general consensus on the usefulness for a requirement that all new passenger ships undertake an evacuation analysis at the early design stage.

3.16 However, the Sub-Committee agreed that, for the time being, Member Governments should be invited to bring both of the Interim Guidelines (simplified or advanced) to the attention of all those concerned, in particular ship designers, and recommend them to use either of the two Guidelines when conducting evacuation analyses on new ro-ro passenger ships in

compliance with SOLAS regulation II-/28-1.3 and, when it enters into force on 1 July 2002, regulation II-2/13.7.4 and encourage them to conduct, on a voluntary basis, evacuation analyses on new passenger ships other than ro-ro passenger ships.

Application of the Interim Guidelines to existing passenger ships

3.17 In concurring with the group's view on this issue, the Sub-Committee agreed that Member Governments should also be invited to encourage all those concerned to conduct, on a voluntary basis, evacuation analyses on existing passenger ships, using either of the two (simplified on advanced) Interim Guidelines having due regard to the following:

.1 that the aim of the evacuation analysis for existing passenger ships should be to identify congestion points and/or critical areas and to provide recommendations on where these points and critical areas are located on board; and

.2 based on these results and consistent with the shipowner's responsibility to ensure passenger and crew safety by means of operational measures on board, the shipowner should make sure that, in the event the total calculated evacuation time exceeds the maximum allowable time, suitable measures (e.g. updates of the onboard emergency procedures, emergency preparedness of the crew, etc.) are implemented.

Approval of simulation tools

3.18 The Sub-Committee considered the proposal attached to document FP 46/3/2, along with the general procedure used in other industrial fields provided in document ISO/TR 13387-8:1999, and agreed to the draft Interim Guidance on validation/verification of evacuation simulation tools, as set out in annex 3 to annex 2 (see also paragraph 3.21), with the recommendation that:

.1 the Interim Guidance be improved once availability of further experimental data, research and development results and experience warrant it; and

.2 Member Governments should be invited to use the Interim Guidance for the purpose of assessing the ability of evacuation simulation tools to perform the evacuation analysis according to the advanced Interim Guidelines.

Recommendations on the evacuation time

3.19 Regarding the maximum allowable evacuation time for non ro-ro passenger ships, the Sub-Committee took into account the following reflections:

.1 the 60 minutes total evacuation time for ro-ro passenger ships is apparently based on the survivability due to progressive flooding, which represented the most prevalent cause of ro-ro ship losses;

.2 from the fire risk standpoint, ro-ro passenger ships are exposed to risk in connection with the special category spaces (e.g. ro-ro spaces); such a risk is not present in conventional passenger ships;

.3 the total evacuation time for conventional passenger ships needs to be related to survivability; however, the Sub-Committee could only express its opinion based

on fire-related risks. Therefore, it is recommended that a similar type of exercise be carried out by other relevant sub-committees in addition to the Sub-Committee;

.4 the safety record of conventional passenger ships is better than that of ro-ro passenger ships; moreover, history of fire accidents has shown that in the case of total loss due to fire, the ship generally survives for many hours after the initial fire outbreak;

.5 SOLAS chapter II-2 requirements are such that, in a passenger ship, the fire can be contained for 60 minutes in the main vertical zone where the outbreak occurred;

.6 in this regard, passenger ships other than ro-ro passenger ships with more than a few main vertical zones, have an inherent fire safety level which is in excess of 60 minutes; and

.7 SOLAS regulation III/21.1.4 already requires that the embarkation into survival craft and their launching is achieved in no more than 30 minutes; this requirement applies to all passenger ships.

3.20 Based on the above and keeping in mind that the view of the Sub-Committee is only related to fire risk, the Sub-Committee recommended that the maximum allowable total evacuation time for passenger ships other than ro-ro passenger ships should be in the range of 60 minutes to 80 minutes according to the following:

.1 the lower value (i.e. 60 minutes), should apply to ships having no more than three main vertical zones; and

.2 the upper value (i.e. 80 minutes) should apply to ships having more than three main vertical zones.

Draft MSC circular

3.21 Having considered the above matters, the Sub-Committee agreed to a draft MSC circular on Interim Guidelines for evacuation analysis for new and existing passenger ships containing both the Interim Guidelines and related appendices referred to in paragraphs 3.11 and 3.12 above and the Interim Guidance referred to in paragraph 3.18 above, as set out in annex 2, for consideration by the Committee with a view to approval. The Secretariat was instructed to bring the above circular to the attention of other sub-committees, as appropriate.

3.22 In this context, Member Governments were invited to:

.1 collect and submit to this Sub-Committee for further consideration any information and data resulting from research and development activities, full-scale tests and findings on human behaviour which may be relevant for the necessary future upgrading of the present Interim Guidelines;

.2 submit to this Sub-Committee information on experience gained in the implementation of the Interim Guidelines; and

.3 use the Interim Guidance on validation/verification of evacuation simulation tools provided in annex 3 to the aforementioned MSC circular when assessing the ability of evacuation simulation tools to perform an advanced evacuation analysis.

Directional sound as an aid to passenger evacuation

3.23 The Sub-Committee briefly considered documents FP 46/11/2 and FP 46/INF.9 (United Kingdom) on directional sound to aid passenger evacuation and noted the following comments:

.1 there was general agreement in that the documents present an interesting new technology;

.2 directional sound beacons might not be heard above, or distinguished from, the background sounds likely to be experienced in an emergency evacuation situation;

.3 the question as to whether it is technically necessary or advisable to integrate such a system with other existing onboard systems (e.g. public address system, general alarm, etc.), was raised;

.4 the question as to whether the system has the capability of directing people away from a particular hazard without crew intervention was also raised;

.5 a clarification is needed on how much information and early briefing was given to those involved in the trial described in document FP 46/11/2, including the crew; and

.6 information would be needed on whether counterflow of passengers had been considered (e.g. people returning to the cabins in order to collect lifejackets, etc. prior to evacuation).

3.24 The delegation of the United Kingdom thanked the Sub-Committee for its comments, which would be taken into account in any possible submission on the subject to the Maritime Safety Committee.

4 SMOKE CONTROL AND VENTILATION

4.1 The Sub-Committee recalled that FP 44 decided to keep this item on the agenda for two sessions as a low priority item and agreed that voluntary guidelines should be developed with a view toward keeping assembly stations and atriums smoke-free during a fire.

4.2 The Sub-Committee also recalled that FP 45, in considering the issue in general, had invited Members to submit proposals to this session and that the delegation of Italy had offered to prepare draft Guidelines on smoke control and ventilation based upon annex 2 to document FP 44/5 (United States) for consideration by the Sub-Committee.

4.3 The Sub-Committee considered the documents submitted by Italy (FP 46/4), Sweden (FP 46/4/1 and FP 46/INF.6), ICCL (FP 46/4/2 and FP 46/4/3), Japan (FP 46/4/4) and the United States (FP 46/INF.7) containing information, comments, proposals and test data related to smoke control and ventilation on passenger ships. After a general discussion, the Sub-Committee agreed to use the draft Guidelines on smoke control and ventilation systems for

internal assembly stations and atriums on passenger ships, as contain in the annex to document FP 46/4, as the base document for further discussion.

Establishment of the drafting group

4.4 Recognizing the necessity to make progress on this matter and recalling its decision at FP 45 to establish a drafting group on smoke control and ventilation at this session, the Sub-Committee established the aforementioned drafting group and instructed it to further develop the text of the draft Guidelines together with the associated draft MSC circular based on the annex to the document FP 46/4, taking into account the comments and decisions made in plenary and, in particular to:

.1 consider paragraph 5.4.5.3 of the draft Guidelines with a view to clarifying the meaning of the words "smoke-free" and consider whether the issue should be one of visibility (i.e. how do passengers find their way out, rather than to clear the areas of smoke) and make recommendations as appropriate;

.2 consider the applicability of tests carried on board ship with regard to the use of hot and cold smoke and make recommendations as appropriate;

.3 review the text of paragraphs 4.2 and 5.5.1 of the draft Guidelines with a view to eliminating contradictory guidance relating to manual and automatic operation; and

.4 consider the vague phrases (i.e. "to the satisfaction of the Administration" and "if deemed appropriate by the Administration") and make recommendations as appropriate.

Report of the drafting group

4.5 Having received the report of the drafting group (FP 46/WP.1), the Sub-Committee approved it in general and took action as outlined hereunder.

Guidelines for smoke control and ventilation systems for internal assembly stations and atriums on new passenger ships

4.6 Having considered the draft Guidelines prepared by the group, the Sub-Committee agreed to the draft MSC circular on Guidelines for smoke control and ventilation systems for internal assembly stations and atriums on new passenger ships, set out in annex 3, for submission to the Committee for approval.

Other matters

4.7 The Sub-Committee noted the group's recommendation to consider further the issue of interaction between smoke control systems and fixed fire-extinguishing systems and decided that it should deal with the issue at a future session under its present item to be retained in the work programme and to issue any documents containing information on experience gained in the implementation of the Guidelines under agenda item on "Any other business". The Sub-Committee requested the Correspondence Group on Performance Testing and Approval Standards for Fire Safety Systems to examine whether this issue fell within its terms of reference and report to FP 47 accordingly (see paragraphs 12.5 and 12.6).

4.8 The Sub-Committee also agreed to refer the issue of supplying fresh air to internal assembly stations to the Correspondence Group on Large Passenger Ship Safety.

5 UNIFIED INTERPRETATIONS OF SOLAS CHAPTER II-2 AND RELATED FIRE TEST PROCEDURES

5.1 The Sub-Committee recalled that FP 45 had agreed to retain the item on "Unified interpretations of SOLAS chapter II-2 and related fire test procedures" in the Sub-Committee's agenda for FP 46 and to establish a working group at this session.

Fire test procedures

5.2 The Sub-Committee considered matters pertaining to fire test procedures, as addressed in the submissions by Denmark (FP 46/5/6), Japan (FP 46/5/9) and the United States (FP 46/5), and agreed that these issues should be further considered by the working group in the course of their deliberations on fire test procedures in general (see paragraphs 5.20 to 5.23).

5.3 Notwithstanding the above decision, the Sub-Committee, noting that several of the aforementioned documents contained proposed amendments to various IMO instruments, agreed that the working group should only consider unified interpretations related to vague phrases. In this context, the Sub-Committee also decided to take no action on document FP 46/5/3 (France) regarding interpretations of resolution A.653(16) and invited the delegation of France to submit their proposal to the Committee in accordance with the Guidelines on the organization and method of work (MSC/Circ.931, as amended) because the Sub-Committee considered that the proposal was an amendment to resolution A.653(16) rather than an interpretation.

5.4 In regard to document FP 46/5/6 containing proposed amendments to resolution A.754(18), the Sub-Committee was informed by the ISO representative that its Technical Committee on Ships and Marine Technology (TC 8) was in the process of updating the ISO standard on windows and side scuttles for fire-resistant constructions (ISO 5759).

5.5 In considering document FP 46/5/4 (France) containing proposed revisions to the criteria for analysing gases in accordance with part 2 of the FTP Code, the Sub-Committee agreed to hold this matter in abeyance until after MSC 75 when the Committee will have provided further guidance on this issue as part of their consideration of the submission by the United Kingdom (MSC 75/22/8) on gas concentration limits for sulphur dioxide. The Sub-Committee also noted that an ISO standard for method of gas analysis on fire effluents is now being developed by ISO.

5.6 The Sub-Committee decided to consider documents FP 46/5/10 and FP 46/5/11 (Japan) containing proposed interpretations and the addition of a supplementary test procedure to MSC/Circ.913, also under agenda item 12 (see paragraph 12.5).

Carbon monoxide detectors

5.7 The Sub-Committee recalled that, at FP 45, it had considered document FP 45/6/2 (United Kingdom) containing draft guidelines on the use and installation of combined carbon monoxide fire detectors in areas of high fire risk, and had invited the United Kingdom to submit further information on the alarm threshold, lifetime of chemical detectors, how to apply opacity test and testing standards to be developed, to FP 46.

5.8 The Sub-Committee considered the submission by the United Kingdom (FP 46/5/7) containing an updated version of the aforementioned draft guidelines and the information

requested by FP 45 and agreed that the working group should further consider the draft Guidelines set out in the annex to document FP 46/5/7 as well as the issues indicated in the above paragraph in the course of preparation of the aforementioned draft Guidelines (see paragraph 5.18).

Proposed amendments and editorial corrections to the revised SOLAS chapter II-2

5.9 The Sub-Committee considered the submission by Germany (FP 46/5/5) on the proposed amendments and editorial corrections to the revised SOLAS chapter II-2 adopted by resolution MSC.99(73) and recalled the Committee's decision that sub-committees should not develop new interpretations and amendments without authorization from the Committee.

5.10 With respect to the proposed editorial corrections, the Sub-Committee, recognizing the need to have a smooth implementation of the revised SOLAS chapter II-2, agreed that the working group should consider the proposed editorial corrections contained in document FP 46/5/5 and relevant comments by plenary with a view toward identifying any proposed editorial corrections for consideration by the Sub-Committee and subsequent submission to the Committee for approval and circulation by means of procés verbal of rectification (see paragraphs 5.24 and 5.25).

Unified interpretations to the existing SOLAS chapter II-2

5.11 The Sub-Committee, recalling that FP 45 had decided to further consider annex 2 of document FP 45/WP.5 containing draft unified interpretations to SOLAS regulations II-2/16 and 32, agreed that the working group should further consider these matters in the course of their deliberations on unified interpretations (see paragraph 5.19).

5.12 Regarding the outcome of DSC 6 on the modification of carbon dioxide fire-extinguishing systems for seed cake cargoes and, in particular the interpretation by Japan, as contained in document DSC 6/5/5, the Sub-Committee noted that DSC 6, while considering that such measures would be impracticable and that it would be unrealistic to fit such an extended fixed fire-extinguishing system, agreed that such a requirement could be regarded as an interpretation of the requirements for fixed fire-extinguishing systems contained in SOLAS chapter II-2.

5.13 The delegation of the United Kingdom, noting with concern that opinion of DSC 6, pointed out that the BC Code is recommendatory in nature and therefore individual Administrations can decide the extent to which the advice in the Code is relevant for a particular cargo. Secondly, regarding the fire-extinguishing systems recommended for the carriage of seed cake, the United Kingdom delegation did not consider that the advice relating to carbon dioxide extension pipes is an interpretation of the fixed fire-extinguishing system requirements prescribed in SOLAS chapter II-2. The United Kingdom was also of the opinion that the recommendation to fit extension pipes should be considered in association with the length of the voyage and the ambient and cargo temperatures.

5.14 The Sub-Committee, in considering the outcome of DSC 6 and the comments by the United Kingdom, agreed that the BC Code adequately addresses the matter and that a unified interpretation for SOLAS chapter II-2 was not necessary in this regard. The Secretariat was instructed to inform the DSC Sub-Committee accordingly.

Unified interpretations to the revised SOLAS chapter II-2

5.15 The Sub-Committee considered the submissions by the United States (FP 46/5 and FP 46/5/1) and Japan (FP 46/5/8 and FP 46/5/12) proposing draft unified interpretations to the revised SOLAS chapter II-2 and agreed that the working group should prepare a draft text of clear justifications for requesting the Committee to expand the scope of this work programme item to the revised SOLAS chapter II-2 (see paragraphs 5.26 to 5.31).

Establishment of the working group

5.16 Recognizing the necessity to make progress on these issues and recalling its decision at FP 45 to establish an *ad hoc* working group on unified interpretations at this session, the Sub-Committee established the working group and, taking into account the comments and decisions made in plenary, instructed it to:

.1 finalize the draft Guidelines for the use and installation of combined carbon monoxide and rate of temperature rise fire detectors in place of smoke detectors in accommodation spaces and prepare the associated draft MSC circular taking into consideration document FP 46/5/7;

.2 further consider the draft unified interpretations related to regulations 16 and 32 of the existing SOLAS chapter II-2 contained in annex 2 to document FP 45/WP.5;

.3 further consider the draft unified interpretations related to fire test procedures contained in documents FP 46/5, FP 46/5/2, FP 46/5/3, FP 46/5/4, FP 46/5/6, and FP 46/5/8 and make recommendations as appropriate;

.4 prepare a draft text of clear justifications for requesting the Committee to expand the scope of this work programme item to the revised SOLAS chapter II-2; and

.5 consider document FP 46/5/5 and the comments made in plenary with a view toward identifying any necessary editorial corrections for the revised SOLAS chapter II-2.

Report of the working group

5.17 Having received the report of the working group (FP 46/WP.9), the Sub-Committee approved it in general and took action as outlined hereunder.

Guidelines for the use and installation of detectors equivalent to smoke detectors

5.18 The Sub-Committee considered the draft Guidelines for the use and installation of combined carbon monoxide and rate of temperature rise fire detectors in place of smoke detectors in accommodation spaces prepared by the group and agreed to the draft MSC circular on Guidelines for the use and installation of detectors equivalent to smoke detectors, set out in annex 4, for submission to the Committee for approval.

Unified interpretations related to the existing SOLAS chapter II-2

5.19 The Sub-Committee considered the draft unified interpretation related to the existing SOLAS chapter II-2, as contained in annex 2 to document FP 45/WP.5 regarding a fixed means

for extinguishing a fire within the duct (SOLAS regulations II-2/16.7.4 and 32.1.9.3) and concluded that this interpretation was not needed since it did not provide additional guidance in the matter.

Unified interpretations related to fire test procedures

5.20 The Sub-Committee considered interpretations related to fire test procedures as proposed in various submissions to this meeting and agreed to the draft MSC circular on Unified interpretations of the International Code for the Application of Fire Test Procedures (FTP Code) and fire test procedures referred to in the Code, set out in annex 5, for submission to the Committee for approval.

5.21 The Sub-Committee also considered that the proposed interpretations in the following documents to be amendments and therefore did not include them in the list of interpretations to the FTP Code and resolutions referenced therein:

.1 FP 46/5 (United States), second proposed interpretation in annex 2, regarding windows in fire doors;

.2 FP 46/5/2 (France), regarding amendments to resolution A.754(18) concerning gap gauges; and

.3 FP 46/5/4 (France), proposing revisions to the FTP Code regarding methods for analysis of gases.

5.22 The Sub-Committee was of the view that a new work programme item on the revision of the FTP Code and resolutions referred therein should be included in the work programme of the Sub-Committee and noted in this regard that the United Kingdom had already submitted a proposal to MSC 75 on a specific issue relating to the testing of floor coverings.

5.23 Regarding documents FP 46/5/9 and FP 46/5/10 submitted by Japan on interpretations to MSC/Circ.913 (Guidelines for the approval of fixed water-based local application fire-fighting systems for use in category A machinery spaces), the Sub-Committee concluded that document FP 46/5/10 should also be considered under the work programme item "Performance testing and approval standards for fire safety systems" and that both documents should be dealt with by the correspondence group established under the aforementioned item. The same conclusion was reached after consideration of document FP 46/5/11 (Japan) regarding guidelines for the approval of flame detectors. The delegation of Japan stated that it already applied the interpretations to MSC/Circ.913, as proposed in documents FP 46/5/9 and FP 46/5/10, to ships flying their flag and that Japanese shipyards may also apply these interpretations to ships built in Japan and expressed its intention to consider and develop draft unified interpretations on this issue in collaboration with interested delegations (see paragraph 12.5).

Correction of errors in revised SOLAS chapter II-2

5.24 The Sub-Committee considered document FP 46/5/5 (Germany) containing proposed modifications to revised SOLAS chapter II-2 and agreed to a list of correction of errors, as set out in annex 6. The Sub-Committee agreed to request the Committee to approve the proposed correction of errors and to instruct the Secretariat to initiate a procés verbal of rectification. In regard to other proposed corrections, which were considered by the Sub-Committee as amendments and therefore were not included in the list, the Sub-Committee invited interested delegations to bring the aforementioned proposals to the attention of the Committee in

accordance with the Guidelines on the organization and method of work (MSC/Circ.931, as amended).

5.25 The Sub-Committee also briefly considered a proposed correction of errors to chapter 5 of the FSS Code (paragraph 2.2.1.3) regarding the calculation of CO_2 in case of two or more machinery spaces which are not entirely separated, and agreed that this matter should be further considered under its work programme item on "Performance testing and approval standards for fire safety systems" (see paragraph 12.5).

Unified interpretations to the revised SOLAS chapter II-2

5.26 The Sub-Committee considered requesting the Committee to expand the scope of this work programme item to include interpretations to the revised SOLAS chapter II-2, due to enter into force on 1 July 2002, and agreed that the unified interpretations needed to be harmonized with the revised SOLAS chapter II-2 and the FSS Code for ships built on or after 1 July 2002, and should include the unified interpretations agreed to date. It was noted that the cross-reference list in document FP 46/INF.4 could be used for this purpose.

5.27 The Sub-Committee therefore agreed to request the Committee to expand the work programme item to also include interpretations to the revised SOLAS chapter II-2 and the FSS Code under the new title "Unified interpretations of SOLAS chapter II-2, the FSS Code and related fire test procedures" and to extend the target completion date to 2004. The delegation of Germany offered to prepare a relevant consolidated document for FP 47.

5.28 The Sub-Committee then considered documents FP 46/5 (United States) and FP 46/5/8 and FP 46/5/12 (Japan) containing proposals for unified interpretations to the revised SOLAS chapter II-2, and agreed to a draft MSC circular on Unified interpretations of the revised SOLAS chapter II-2, set out in annex 7, for submission to the Committee for approval. In regard to the draft interpretations to SOLAS regulations II-2/10.5.6.2 and 10.5.6.3 contained in document FP 46/5/8, the Sub-Committee referred them to the correspondence group established under the work programme item on "Performance testing and approval standards for fire safety systems". The Sub-Committee noted that Japan already applied the interpretations of the revised SOLAS chapter II-2, as contained in documents FP 46/5/8 and FP 46/5/12, to ships flying their flag.

5.29 The delegation of Poland stated that in their opinion the draft interpretation of regulation II-2/6.2 (see annex 4 to document FP 46/WP.9) would, in practice, allow the use of combustible materials on ships without any control of their smoke and toxic properties, except for those materials used in places as mentioned in regulation II-2/5.3.2.4.1.1 for passenger ships and in regulation II-2/5.3.2.4.2.1 for cargo ships. This will be in opposition to the fire safety objectives of SOLAS chapter II-2 as set out in regulation 2.1.1.1; to the functional requirements set out in regulation 2.1.3 and also to the general meaning of regulation 6 as set out in regulation 6.1. In this context, the delegation of Germany stated that the existing text of regulation II-2/6.2 could be interpreted to mean "all interior surfaces", including interior surfaces of non-accommodation spaces such as water ballast tanks, cargo holds and engine-rooms, which in their view was not the intention of the aforementioned regulation. Having discussed the issue, the Sub-Committee agreed to reconsider this interpretation at FP 47.

5.30 The delegation of the Netherlands was of the view that the following interpretation to the FSS Code should be considered in the future:

"Paragraph 5.2.1.1.4 *Storage of fire-extinguishing medium and associated pressure*

For the design of containers for the storage of fire-extinguishing medium and associated pressure components, the following international standards (as pressure codes of practice) are recommended:

.1 ISO 9809/1: Refillable seamless steel gas (design, construction and testing)

.2 ISO 3500: Seamless steel CO_2 cylinders. For fixed fire-fighting installations on ships."

5.31 The IACS representative drew the attention of the Sub-Committee to the following consequence of the adoption of the revised SOLAS chapter II-2. With the existing SOLAS chapter II-2, under regulation II-2/15.2.7, it was accepted that lubrication oil tank vent pipes terminated in the engine-room, provided in a safe location. In the process of re-drafting chapter II-2, a valid interpretation that requires fuel oil tank vents to be led outside of the engine-room was introduced in regulation II-2/4.2.2.4. As this paragraph was cross-referenced in regulation II-2/4.2.3.1, it made the requirement applicable to lubrication oil tank vents, which would not appear to be warranted. Furthermore, this raised concerns of contamination of lubrication oil with salt air, mist, water, etc. In the opinion of IACS, this matter needed to be further considered.

6 DEVELOPMENT OF GUIDELINES FOR SHIPS OPERATING IN ARCTIC ICE-COVERED WATERS

6.1 The Sub-Committee recalled that FP 45 decided to take no action on the draft Guidelines for ships operating in Arctic ice-covered waters until DE 44 had further considered the aforementioned Guidelines taking into consideration the new framework approved by Committee. Members were invited to submit comments and proposals to FP 46 taking into account the outcome of DE 44.

6.2 The Sub-Committee was informed by the Secretariat (FP 46/6) that DE 44 had further considered the draft Guidelines taking into consideration the new framework approved by MSC 71 and, having identified the parts of the draft Guidelines which should be referred to other Sub-Committees, had agreed to refer them to the appropriate sub-committees for consideration and instructed the Secretariat to provide the sub-committees with a clean version of the draft Guidelines; the table identifying the parts where their input is sought; and the instructions of the Committee (MSC 71/23, paragraphs 9.16 and 9.17) regarding the preparation of the draft Guidelines.

6.3 The Sub-Committee considered the document submitted by Japan (FP 46/6/1) containing comments and proposals on the aforementioned draft Guidelines and, after agreeing, in principle, to the proposed modifications, requested the Secretariat to prepare a document, taking into account the comments and decisions made in plenary, for further consideration by the Sub-Committee.

6.4 Having considered the document by the Secretariat (FP 46/WP.5), the Sub-Committee agreed to the following modifications to the draft Guidelines for ships operating in Arctic ice-covered waters:

.1 in the preamble, the following new paragraph should be added after paragraph G-2.4:

"G-2.5 Sea suction(s) should be capable of being cleared of accumulation of slush ice."

.2 in chapter 1, paragraph 1.1.3.1 should be replaced by the following:

"1.1.3.1 All Polar class ships and the equipment to be carried in accordance with these guidelines should be designed, constructed and maintained in compliance with applicable national standards of the Administration, or the appropriate requirements of a recognized organization, which provide an equivalent level of safety for its intended service.*

.3 in chapter 10, the existing text of paragraph 10.3.3.2 should be replaced by the following:

"10.3.3.2 Fire pump(s) including emergency fire pump(s) should be, whenever reasonable and practicable, installed in heated compartment(s) and in any event should be adequately protected from freezing for minimum temperature for the intended voyage, as specified in paragraph 1.1.3.3"; and

.4 in chapter 10, the word "fireman's" should be replaced with "fire-fighter's" in paragraphs 10.5, 10.5.1 and 10.5.2.

6.5 The Secretariat was instructed to inform DE 45 accordingly and to refer the above-proposed modifications to the DE Sub-Committee for co-ordination purposes, as appropriate. The Committee was also invited to note the outcome of the Sub-Committee on this matter.

7 ANALYSIS OF FIRE CASUALTY RECORDS

7.1 The Sub-Committee recalled that FP 45 had agreed to establish a working group at this session to consider fire casualties forwarded by the FSI Sub-Committee with an emphasis on hot work-related casualties.

Engine-room fires investigated by Australia

7.2 The Sub-Committee recalled that, at FP 45, it had considered the outcome of FSI 8 on matters relevant to the Sub-Committee and, in particular, that FSI 8, in considering the findings and recommendations of the Correspondence Group on Casualty Analysis, as recommended by the Working Group on Casualty Statistics and Investigations, had agreed to:

.1 refer, to this Sub-Committee, document FSI 8/11/1 (Australia) on investigations into shipboard fires conducted by Australia, noting that copies of the referenced investigation reports can be made available by the Secretariat, if needed; and

.2 requested the Sub-Committee to consider the analysis and recommendations on fires and explosions contained in the annex to document FSI 8/WP.4 with a view toward whether further guidance on hot work is needed, taking into consideration resolution A.864(20) on Recommendations for entering enclosed spaces aboard ships and MSC/Circ.807 on Guidelines on riding repairs.

7.3 In considering document FSI 8/11/1 by Australia, the Sub-Committee also recalled that FP 45 had been of the view that more time would be necessary to analyze the reports provided by Australia and that copies of the reports referred to in document FSI 8/11/1 have been made available to the Secretariat for use by the Sub-Committee as appropriate.

7.4 Having considered the issue in general, the Sub-Committee agreed that this matter should be further considered by the working group in the course of their deliberations and noted that copies of the reports were reproduced by the Secretariat for use by the group as appropriate.

Hot work casualties

7.5 On matters related to hot work safety, the Sub-Committee recalled that FP 45, being concerned with the number of hot work casualties and the severity of such casualties, as reported by the FSI Working Group on Casualty Analysis, had instructed the Secretariat to review the reports on accidents involving hot work that have been submitted to the Organization and to provide FP 46 with the following information:

.1 whether the ships involved were in or out of service;

.2 if in service, whether they were at sea or alongside;

.3 whether the officers and crew were shoreside or on board;

.4 determine, if possible, whether resolution A.864(20) and circular MSC/Circ.807 were available for use;

.5 identify the onboard location where the accident occurred;

.6 determine, if possible, whether areas where hot work was being carried out were in use;

.7 identify what type of hot work was underway (e.g. burning, welding, cutting, etc.);

.8 determine, if possible, qualifications and training of people involved;

.9 determine whether the fire occurred "remote" from the place of hot work; and

.10 report on whether company or industry procedures were in place and whether such procedures were in excess or less than those stated in resolution A.864(20) and MSC/Circ.807.

7.6 Having considered document FP 46/7/1 (Secretariat), the Sub-Committee noted that only three casualties were submitted to the Organization. In carrying out the analysis as instructed, the Secretariat noted that the following trends became apparent:

.1 that no information was available regarding the relevant qualifications and training of people directly involved in the casualty;

.2 that the casualty reports made no mention of whether the relevant resolutions or circulars were available for use; and

.3 two of the three casualties made no mention of whether company procedures were in place, and in all cases, whether the company procedures were in excess of the relevant resolutions or circulars.

Copies of the aforementioned casualties were made available to the working group for detailed consideration.

7.7 The Sub-Committee also considered the submission by the United States (FP 46/7/2) providing information on hot work-related casualties reported to the United States Coast Guard since 1992, and agreed that the working group should further consider the issues raised in the aforementioned document along with the information provided by the Secretariat (see paragraphs 7.15 to 7.23).

Outcome of FSI 9

7.8 It was noted that FSI 9 had agreed to forward the observations on the human element from the investigation of an engine-room fire to the Sub-Committee and to the Joint MSC/MEPC Working Group on Human Element, together with the texts of relevant parts of the full investigation report of the casualty for consideration and action, as appropriate.

7.9 Having considered document FP 46/7 (Secretariat), the Sub-Committee noted that the FSI Correspondence Group on Casualty Analysis had recommended that the Sub-Committee consider the observations on the human element from the investigation of an engine-room fire on board the **Toisa Gryphon** and that, to assist the Sub-Committee in this regard, the aforementioned observations on the human element and the extracts from the subject casualty report were reproduced in annexes 1 and 2 of document FP 46/7 respectively.

7.10 The Sub-Committee agreed that the working group should further consider the issues raised in the aforementioned document and provide recommendations, as appropriate (see paragraphs 7.24 to 7.26).

Casualties forwarded by the FSI Sub-Committee

7.11 The Sub-Committee recalled that FP 45 was of the view that a long-term solution is necessary to deal with future recommendations made by the FSI Sub-Committee. In this regard, the Sub-Committee agreed with the view expressed by several delegations at FP 45 that such recommendations are usually not accompanied by the information and casualty data necessary to facilitate consideration of the issues referred to it by the FSI Sub-Committee.

7.12 Having recalled that the FSI Sub-Committee is currently investigating what changes should be made in the method or format of the information analysed by the casualty analysis working group and presented to other bodies for action, the Sub-Committee decided that the working group should consider ways to improve the analysis of fire casualties forwarded by the FSI Sub-Committee and provide recommendations accordingly (see paragraphs 7.27 to 7.33).

Establishment of the working group

7.13 After discussion of the above issues and recalling its decision at FP 45 regarding the establishment of the working group on the analysis of fire casualty records at this session, the Sub-Committee established the aforementioned working group and, taking into account the comments and decisions made in plenary, instructed it to:

.1 consider the hot work-related casualties contained in documents FP 46/7/1 and FP 46/7/2 and determine whether further guidance on hot work is needed taking into consideration resolution A.864(20) and circular MSC/Circ.807 and prepare, if necessary, appropriate recommendations or amendments thereto;

.2 further consider matters related to document FSI 8/11/1 on investigations in shipboard fires conducted by Australia and make recommendations as appropriate;

.3 consider the observations on the human element from the investigation of the engine-room fire on board the **Toisa Gryphon**, as contained in document FP 46/7, and make recommendations as appropriate; and

.4 prepare recommendations on ways to improve the analysis of fire casualties forwarded by the FSI Sub-Committee.

Report of the working group

7.14 Having received the report of the working group (FP 46/WP.3), the Sub-Committee approved it in general and took action as outlined hereunder.

Hot work

7.15 The Sub-Committee considered the hot work issues initiated by the FSI Sub-Committee and considered the data (FP 46/7/1 and FP 46/7/2) on hot work-related cases covering a wide range of situations regarding the procedures to be followed on board ships.

7.16 The Sub-Committee, in considering whether references to resolution A.864(20) on Recommendations for entering enclosed spaces aboard ships and MSC/Circ.807 on Guidelines on riding repairs for cases involving hot work would address all the issues raised in the above cases, agreed that, based on its analysis of the set of casualty data provided at this session, the two existing instruments did not fully cover the issue of hot work.

7.17 The Sub-Committee discussed what recommendations could be relevant to make shore-based managers and seafarers aware of the potential risks associated with hot work, so that, on board all ships, hot work instructions are available and are properly followed.

7.18 The Sub-Committee noted that existing guidelines, specific to hot work, such as those produced by ILO, IAPH, ICS, ISGOTT and OCIMF, when duly applied, should provide sufficient guidance in the development of hot work on board instructions and guidance. The Sub-Committee agreed that the role of IMO regarding the development and implementation of appropriate hot work guidelines should be limited to the identification and listing of basic principles, which could simply make reference to the existing guidelines, based on best industrial practices.

7.19 The Sub-Committee, therefore, decided to develop, at its next session, a user-friendly, non-detailed list of common principles, applicable to hot work situations on board all types of ships, which seafarers, operators, management and auditors in the ISM Code system could keep in mind when developing specific on-board instructions to suit their operational needs, on the basis of existing guidelines referred to in paragraph 7.18 and include hot work in the Safety Management System (SMS), following the principles contained in the Human Element Analysing Process (HEAP).

7.20 Regarding the information for crew awareness, the Sub-Committee agreed to recommend to the FSI Sub-Committee that the Working Group on Casualty Analysis include crew awareness in the Summary of lessons learned information on hot work casualties and recommended corrective actions.

7.21 The Sub-Committee noted that the routine procedure (regarding the summary of lessons learned) relied on the aforementioned FSI correspondence and working groups, subject to approval by the FSI Sub-Committee, to use extracts from the reports of the correspondence group in order to prepare the summary of lessons learned.

7.22 In the case of hot work, the Sub-Committee decided that the information contained in, paragraphs 7.15 to 7.18 should form the basis of such guidance, stressing the existence of guidelines such as those listed in paragraph 7.18.

7.23 The Sub-Committee also agreed to recommend to the STW Sub-Committee to consider seafarers' training issues regarding hot work situations. The Sub-Committee identified, for example, the importance of making sure that seafarers' training programmes make use of the existing guidelines, as listed in paragraph 7.18.

Observations on the investigation of the engine-room fire on board the "Toisa Gryphon"

7.24 Regarding the observations on the human element from the investigation of the engine-room fire on board the **Toisa Gryphon**, as contained in document FP 46/7, the Sub-Committee noted that the document highlighted problems associated with the use of smoke helmets, which reduces the effectiveness and safety of fire-fighting teams on ships having small crews, and questioned the wisdom of the use of such equipment.

7.25 The Sub-Committee also noted that the revised SOLAS chapter II-2, which is due to come into force on 1 July 2002, will remove the alternative requirement to fit a smoke helmet and that the relevant new regulation does not apply to existing ships, and that if companies continue to use this equipment, they should be satisfied that fire-fighting teams are adequately trained in its use, effective procedures are in place and fire-fighting teams are able to operate effectively and safely.

7.26 The Sub-Committee, having considered the above issues and a draft MSC circular on the Use of smoke helmet type breathing apparatus, as prepared by the group (FP 46/WP.3, annex 4), decided to further consider this matter at FP 47, and members were encouraged to submit comments and proposals.

Fire casualties forwarded by the FSI Sub-Committee (FSI 8/11/1)

7.27 On the issues identified in document FSI 8/11/1 (Australia) on investigations in shipboard fires conducted by Australia, the Sub-Committee noted that poor maintenance and inappropriate procedures predominated and that these aspects related mainly to electrical switchboard fires, economiser soot fires and engine-room oil fires which had the largest share of the reported casualties.

7.28 Taking into account the hot work-related casualties, the analysis of investigations into shipboard fires and the range of questions which should be addressed before the Sub-Committee is invited to consider fire casualties and the outcome of the analysis of reports of investigations (FP 45/16, paragraph 10.12), the Sub-Committee agreed to review the existing reporting format of the Fire Casualty Record, as contained in annex 6 to MSC/Circ.953-MEPC/Circ.372 on Revised harmonized reporting procedures - Reports required under SOLAS regulation I/21 and MARPOL 73/78 articles 8 and 12.

7.29 In addition, the Sub-Committee also agreed that the existing reporting format needed to be reviewed and amended to reflect the FP Sub-Committee's present need for casualty data

information and developed a preliminary revised format in the context of hot work casualties (FP 46/WP.3, annex 3), taking into account the list of questions contained in paragraph 4 of document FP 46/7/1 and the fire safety objectives and functional requirements contained in the revised SOLAS chapter II-2.

7.30 In order to obtain relevant data through the casualty analysing process, the Sub-Committee decided that, rather than establishing a series of stand-alone questionnaires, specific to each type of fire casualty, preference should be given to the revision of annex 6 to MSC/Circ.953-MEPC/Circ 372, which contains the format of the Fire Casualty Record extracted from MSC/Circ.388.

7.31 The Sub-Committee agreed to finalize the draft revision of annex 6 of MSC/Circ.953-MEPC/Circ.372 (FP 46/WP.3, annex 3) at FP 47 and to inform the FSI Sub-Committee on the status of the revision of the reporting format.

7.32 The Sub-Committee considered in detail the present method of analysing flag States' and substantially interested States' investigation reports and related information reported under the Revised harmonized reporting procedures (MSC/Circ.953-MEPC/Circ.372), which was followed in the case of the problem of hot work, and noted that it had been used effectively in identifying problem areas in hot work operations

Improvements in the present analysing process

7.33 The Sub-Committee agreed to the following proposed revised method, as illustrated in a graphical presentation, as set out in annex 5 to document FP 46/WP.3, on the interactive process between the FSI Sub-Committee and other sub-committees to identify maritime safety and marine pollution issues:

.1 if and when the FSI Sub-Committee agrees with the correspondence group analysts' findings on a potential problem, it should seek further information to identify and substantiate information on potential problems before reporting to the interested sub-committee;

.2 once the FSI Sub-Committee confirms the identification and substantiation of a specific issue, it reports its findings to the appropriate sub-committee along with a selection of extracts of investigation reports, relevant to the issue under consideration, and with corresponding annexes of MSC/Circ.953-MEPC/Circ.372, completed either by the reporting State or by the analysts;

.3 the information collected should enable the FP Sub-Committee to develop, if necessary, a series of questions on specific fire casualty issues for future insertion into annex 6 of MSC/Circ.953-MEPC/Circ.372. These questions could then guide the casualty analysts to focus on issues raised by the FP Sub-Committee itself;

.4 the potential use of the IMO database to help identify trends in fire casualties and causes emphasises the importance of reporting States completing the relevant sections of the annexes of MSC/Circ. 953-MEPC/Circ. 372; and

.5 the information emanating from the revised analysing process, presented in a suitable format on the IMO website, would disseminate important maritime safety and marine pollution awareness information to the shipping community and

would, in particular, help the continuous process of improving the effectiveness of safety management systems.

7.34 The Sub-Committee instructed the Secretariat to bring the above information on the proposed revised analysing process to the attention of the FSI Sub-Committee and invited the FSI Sub-Committee to provide comments on the proposed process, as set out in annex 5 to document FP 46/WP.3, to the Sub-Committee.

7.35 The Sub-Committee also requested the FSI Sub-Committee to consider the following specific recommendations relating to the collection of information on fire casualties:

.1 to consider the need for the additional questions identified by the Sub-Committee (to be covered by the outcome of the FSI casualty analysing process) for inclusion in the Fire Casualty Record (MSC/Circ.953-MEPC/Circ.372); and

.2 to consider requesting analysts, intending to refer a specific analysis to the FP Sub-Committee, to make sure that the Fire Casualty Record is completed either by the reporting State or by themselves, and included in the submission to the Sub-Committee.

8 REVISION OF RESOLUTION A.654(16)

8.1 The Sub-Committee recalled that FP 41 had requested ISO to develop an international standard on safety plans for fire protection, life-saving appliances and arrangements and means of escape. It was agreed that the standard should be developed by ISO in close co-operation with IMO and, once the final product is completed by ISO, it should also be adopted by IMO as an Assembly resolution, so that the plans and/or symbols may also be published by IMO or referred to in the revised SOLAS chapter II-2 or the FSS Code, as appropriate.

8.2 The Sub-Committee also recalled that FP 41 had prepared terms of reference for the work requested of ISO/TC 8, as contained in annex 11 to document FP 41/22, and FP 45, noting the progress by ISO on the development of the draft guidelines, had decided to keep this item on the agenda for FP 46.

8.3 The Sub-Committee considered the documents submitted by ISO (FP 46/8 and FP 46/INF.8) and noted the further information provided by the observer from ISO that the standard ISO 17631 – Shipboard plans for fire protection, life-saving appliances and means of escape, had been finalized and published. The ISO observer also informed the Sub-Committee that all the comments presented at the previous sessions of the Sub-Committee had been considered during the development of the standard.

8.4 The Sub-Committee also considered the submission by Poland (FP 46/8/1) containing comments and proposals on documents FP 46/8 and FP 46/INF.8 and, noting that ISO had finalized the aforementioned standard, suggested that the delegation of Poland bring their comments to the attention of ISO/TC 8.

8.5 In considering how to incorporate standard ISO 17631 within the IMO regulatory framework, the Sub-Committee agreed that, as an interim measure, an MSC circular should be issued to inform Member Governments and the marine industry of the new ISO standard so that they may use it on a voluntary basis for the preparation of the shipboard fire control plans, as required by both the existing and revised SOLAS chapter II-2, in anticipation of the pending revision of resolution A.654(16). In this regard, the Sub-Committee also agreed that it would

consider at FP 47, how to incorporate, or make reference to standard ISO 17631, in the revised Assembly resolution for adoption by the Assembly at its twenty-third session in 2003. The Sub-Committee further agreed that it would not alter the contents of standard ISO 17631 as part of the revision process.

8.6 The Sub-Committee agreed that the aforementioned MSC circular should only address matters related to fire protection. To this end, the Sub-Committee decided to invite the DE Sub-Committee to consider taking similar actions in regard to the use of the graphical symbols contained in the ISO standard referred to in paragraph 8.5 above as they relate to life-saving appliances and arrangements, as required by SOLAS chapter III.

8.7 Having noted the concern expressed by delegations regarding the human element aspect of the issue, the Sub-Committee decided to invite the STW Sub-Committee to consider the training implications that may arise by the application of the new ISO standard taking into consideration that seafarers will have to be familiar with the new symbols.

8.8 Having considered the document prepared by the Secretariat (FP 46/WP.7/Rev.1) containing a draft MSC circular on Preparation of shipboard fire control plans, the Sub-Committee agreed to the aforementioned draft MSC circular, as set out in annex 8 for submission to the Committee for approval. The Secretariat was also instructed to inform the DE and STW Sub-Committees accordingly.

8.9 In light of the above decisions, the Sub-Committee requested the Secretariat to prepare two versions of the draft Assembly resolution for consideration at FP 47, as follows:

.1 a draft Assembly resolution making reference to standard ISO 17631:2002 without incorporation of the new ISO standard in the aforementioned resolution; and

.2 a draft Assembly resolution which incorporates only the graphical symbols for fire safety systems and equipment contained in standard ISO 17631 similar in style to resolution A.654(16),

and, in both versions, encourage its use and application in the preparation of the shipboard fire control plans.

8.10 In addition, the Sub-Committee, noting the concern expressed by the delegation of the Russian Federation regarding the applicability of the new ISO standard to high-speed craft, agreed to consider matters related to high-speed craft at FP 47.

8.11 Members Governments and international organizations were invited to submit comments and proposals on the above issues to FP 47.

9 REVISION OF RESOLUTION A.602(15)

9.1 The Sub-Committee recalled that FP 44 considered a document submitted by the Russian Federation (FP 44/6/1) on the revision of resolution A.602(15) - Revised Guidelines for marine portable fire extinguishers and agreed to place this matter on the work programme.

9.2 At FP 45, the Sub-Committee also considered the document submitted by the United Kingdom (FP 45/12) containing proposed modifications to the aforementioned resolution and the Secretariat prepared a draft Assembly resolution which incorporated the proposed

modifications into resolution A.602(15) so that they could be reviewed by the Sub-Committee within the context of the existing Revised Guidelines (FP 45/WP.2). However, the Sub-Committee agreed that more time was necessary to consider the proposed revisions and invited Members to submit comments and proposals on the draft Assembly resolution to this session.

9.3 The Sub-Committee considered document FP 45/WP.2 containing proposed modifications to the aforementioned draft resolution and agreed to finalize the matter at this session. To this end, the Sub-Committee invited interested delegations to participate in an informal group of experts to review aforementioned document and make recommendations, as appropriate, for consideration by the Sub-Committee at the session.

9.4 Having considered the report of the informal group of experts (FP 46/WP.4) and, after making further modifications thereto, the Sub-Committee agreed to the draft Assembly resolution on Improved Guidelines for marine portable fire extinguishers, as set out in annex 11, for submission to the Committee for approval and subsequent adoption by the Assembly.

9.5 The delegation of the United Kingdom stated that it believed all portable fire extinguishers should be discharged at five yearly intervals (as part of a fire drill) as proposed in FP 45/WP.2 and that such a recommendation would be consistent with standard ISO 11602 and, more importantly, promote the training and familiarity of crew members in using portable fire extinguishers.

9.6 The Sub-Committee considered the item completed and invited the Committee to delete this item from its work programme.

10 REVISION OF THE FISHING VESSEL SAFETY CODE AND VOLUNTARY GUIDELINES

10.1 The Sub-Committee noted that MSC 74, having considered the request of SLF 43 to invite the FP, COMSAR, NAV, DE and STW Sub-Committees to review and prepare final texts of relevant chapters of the draft revised fishing vessel Safety Code and Voluntary Guidelines, had agreed to include, in the work programmes of these Sub-Committees a high priority item on "Revision of the fishing vessel Safety Code and Voluntary Guidelines" with a target completion date of 2003.

10.2 Having considered document FP 46/10 (Secretariat), the Sub-Committee noted that SLF 44, having identified the parts of the draft revised fishing vessel Safety Code and Voluntary Guidelines, together with relevant annexes of the existing Code and Voluntary Guidelines, which should be referred to other sub-committees, had agreed to refer them to the appropriate sub-committees for consideration and instructed the Secretariat to provide the sub-committees with a clean version of the relevant parts of the draft revised fishing vessel Safety Code, the draft revised Voluntary Guidelines and the tables identifying the parts where their input is sought, as set out in the annexes to document FP 46/10.

10.3 In considering the information provided by the Secretariat (FP 46/10), the Sub-Committee noted that SLF 44 had agreed that, on matters covered by the 1993 Torremolinos Protocol, the standards contained in the revised fishing vessel Safety Code should not exceed those of the Protocol and that sub-committees should take this view into account when reviewing relevant chapters of the draft revised Code and the Voluntary Guidelines.

10.4 Noting that the draft revised Code and Guidelines contained footnotes to EU Council Directives (interpretations), the Sub-Committee decided that the above-mentioned footnotes should not be included in the final version of the Code and Voluntary Guidelines.

10.5 The Sub-Committee considered detailed comments and proposals on the specific requirements and agreed that a thorough review was necessary to properly consider the draft Revised Safety Code and Voluntary Guidelines forwarded by SLF 44. Therefore, taking into account the target completion date of 2003 and the volume of work to be completed, the Sub-Committee decided to establish a correspondence group, under the co-ordination of Bangladesh,* to progress the work intersessionally and agreed to the following terms of reference:

.1 to review the fire protection provisions of the draft revised Code and Voluntary Guidelines, as set out in annexes 1 and 2 to document FP 46/10, and prepare a draft final text for consideration at FP 47 taking into account the comments and decisions of the Sub-Committee; and

.2 submit a report to FP 47.

11 LARGE PASSENGER SHIP SAFETY

11.1 The Sub-Committee noted that MSC 74, having assigned various tasks to the FP, COMSAR, NAV, DE, SLF and STW Sub-Committees, included in these Sub-Committees' work programmes a high priority item on "Large passenger ship safety", with a target completion date of 2003; and at the same time selected the item for inclusion in the provisional agendas for the subsequent sessions of aforementioned Sub-Committees.

11.2 Having considered document FP 46/11 (Secretariat), the Sub-Committee noted that, in particular, the Committee had approved a guiding philosophy, strategic goals and objectives set out in annex 1 to document FP 46/11, having agreed that the guiding philosophy or "vision statement" was meant to provide an idealized view of where the Committee would like to be in the future regarding the regulatory framework for large passenger ships, and that a "goal" should clearly define the changes required to move the Committee towards its guiding philosophy, whereas the objectives should clearly explain how the strategic goals would be achieved.

11.3 It was also noted that the Committee had agreed to the areas for consideration set out in annex 2 to document FP 46/11, asserting that the sub-committees assigned work on this issue should use the information contained in the aforementioned annex as additional guidance to clarify the intent of assigned objectives and tasks, and reaffirmed the view that efforts affecting existing large passenger ships would continue to focus primarily on matters related to the human element such as operations, management and training, although this should not preclude consideration of equipment and arrangement issues for such ships if deemed appropriate.

---

* Captain M. Ahmed
Deputy Permanent Representative of Bangladesh to IMO
2 Abbey Road,
Barking Essex 1G11 7AX
United Kingdom
Tel: +44 (0)20 8507 8800
Fax: +44 (0)20 8594 0234
E-mail: moin@bscuk.fsnet.co.uk
Website: www.sigling.is/imofishing/home.htm

11.4 In regard to the use of analytical tools, such as formal safety assessment, the human element analysing process, cost/benefit analysis, risk assessment and other methods, it was noted that the Committee was of the view that use of such tools should be left to the discretion of the bodies assigned specific work on large passenger ship safety.

11.5 The Sub-Committee was informed that, in agreeing that operational issues should be viewed for application to both existing and future large passenger ships and that design issues should be considered for application only to future large passenger ships unless recommended otherwise by the expert sub-committees, MSC 74 had approved an updated work plan, including assigning two objectives to the Sub-Committee as reproduced in annex 3 to document FP 46/11.

11.6 The Sub-Committee considered the submissions by the United States (FP 46/11/1 and FP 46/INF.5) reporting the results of a gap analysis to identify areas in IMO instruments where gaps may exist and agreed that this information would be useful in carrying out work on large passenger ship safety issues. Notwithstanding, the Sub-Committee was also of the view that the gap analysis alone would not be enough to fully consider this matter and that more work to identify necessary analysing tools and conduct analysis using such tools was necessary in this regard.

11.7 In considering the comments on document FP 46/11/1 submitted by ICCL (FP 46/11/3), the Sub-Committee supported the view that operational solutions should be an important part of any recommendations which may be developed in consideration of the tasks forwarded by the Committee.

11.8 In the context of consideration of the outcome of MSC 74 and the documents forwarded by the Committee (MSC 73/WP.20 and MSC 74/WP.6) for background purposes, the Sub-Committee noted that a definition of the term "large passenger ship" had yet to be developed and expressed the view that such a definition would be useful from the application point of view.

11.9 The Sub-Committee also considered the submissions by the United Kingdom (FP 46/11/2 and FP 46/INF.9) on directional sound as an aid to passenger evacuation and decided that the Working Group on Evacuation Analysis established under agenda item 3 should also consider this issue from a technical point of view (see paragraphs 3.23 and 3.24).

Establishment of the correspondence group and its terms of reference

11.10 Recognizing that this is a new agenda item and in view of the work to be undertaken, the Sub-Committee agreed that a correspondence group should be established to progress the work intersessionally. To this end, the Sub-Committee instructed a drafting group to prepare a draft terms of reference for the correspondence group taking into account the comments and decisions made in plenary.

11.11 Having considered the draft terms of reference for the correspondence group as prepared by the drafting group (FP 46/WP.6), the Sub-Committee established a correspondence group, under the co-ordination of Germany*, and, taking into account the guiding philosophy, strategic

---

* **Co-ordinator**:
Captain P. Olsson
Ministry of Transport, Building and Housing
Robert-Schuman-Platz 1
D-53175 Bonn
Germany
Tel: +49 228 300 46 38
Fax: +49 228 300 34 28
E-mail: peter.olsson@bmvbw.bund.de

goals and objectives approved by the Committee (FP 46/11, annex 1), the documents submitted to FP 46 (FP 46/11, FP 46/11/1, FP 46/11/2, FP 46/11/3, FP 46/INF.5 and FP 46/INF.9) and the reports forwarded by MSC 74 (MSC 73/WP.20 and MSC 74/WP.6), instructed it to:

.1 consider the interpretations and gap analysis submitted by the United States (FP 46/11/1) on the two objectives and nineteen tasks assigned by MSC 74 to the Sub-Committee (FP 46/11, annex 3);

.2 consider the need for further analysis to justify the development of, or proposed amendments to, IMO instruments (e.g. amendments, resolutions, circular, interpretation, etc.) and make recommendations, as appropriate;

.3 identify areas to be recommended for further consideration by the Sub-Committee;

.4 identify parameters which are considered relevant in terms of fire protection expertise with respect to criteria that may assist in defining the term "large passenger ship";

.5 consider the outcome of MSC 75 on large passenger ship safety matters, as appropriate, within the context of the group's deliberations; and

.6 submit a report to FP 47.

12 PERFORMANCE TESTING AND APPROVAL STANDARDS FOR FIRE SAFETY

12.1 The Sub-Committee recalled that, at FP 45, it had considered a document submitted by the United States (FP 45/INF.5) informing the Sub-Committee that it intended to submit a paper to MSC 74 proposing a new work programme item to undertake the development of comprehensive performance testing and approval standards for the fire safety systems required by SOLAS chapter II-2.

12.2 The Sub-Committee noted that MSC 74 considered the proposal by the United States (MSC 74/21/7) and agreed to include in the work programme and provisional agenda for FP 46, a high priority item on "Performance testing and approval standards for fire safety systems", with a target completion date of 2005.

12.3 In considering the submissions by the United States (FP 46/12) and Germany (FP 46/12/1) containing comments and proposals on performance testing and approval standards for fire safety systems, the Sub-Committee agreed, in principle, with the tasks identified in document FP 46/12 with a view towards harmonizing the various fire testing and approval standards adopted by the Organization.

12.4 Notwithstanding the above decision, some delegations, noting that this work may involve amendments to the SOLAS Convention and other mandatory instruments, were of the view that the Sub-Committee should not consider any amendments to mandatory instruments without the appropriate authorization of the Committee. However, the majority of the Sub-Committee was of the opinion that the Committee did not place any pre-conditions on this agenda item when it included it in the Sub-Committee's work programme. In particular, it was pointed out that the scope of the proposal (MSC 74/21/7) clearly stated that this "work programme item involves revisions to the FSS Code, the FTP Code, and might involve revisions to SOLAS chapter II-2 (all mandatory instruments), but no requirements for ships to carry new or additional fire safety

systems are envisaged unless specifically authorized by the Committee on the basis of a compelling need".

12.5 The Sub-Committee also decided to incorporate within the work on this agenda item the submissions by Japan (FP 46/5/9, FP 46/5/10 and FP 46/5/11) and matters related to the interaction between smoke control systems and fixed fire-extinguishing systems (FP 46/WP.1, paragraph 9) and the calculation of CO_2 for two or more machinery spaces which are not entirely separated (see paragraph 5.25).

Establishment of the correspondence group and its terms of reference

12.6 The Sub-Committee, recognizing the large amount of work to be undertaken, decided to establish a correspondence group, under the co-ordination of the United States,* to progress the work intersessionally taking into account the comments and decisions of the Sub-Committee and instructed it to:

.1 identify the current level of standards in resolutions, recommendations and circulars applying to the categories of fire safety systems on ships listed in document FP 46/12, including those of IMO and ISO, as well as other relevant standards;

.2 develop a preliminary plan for the harmonization, or new development of, approval standards and performance testing for each category of fire safety system identified in document FP 46/12 and paragraph 12.5;

.3 propose short, medium and long-term priorities for each fire safety system category identified in document FP 46/12; and

.4 submit a report to FP 47.

13 WORK PROGRAMME AND AGENDA FOR FP 47

Work programme and agenda for FP 47

13.1 Taking into account the progress made during the session and the provisions of the agenda management procedure, the Sub-Committee reviewed its work programme and agenda for its next session (FP 46/WP.8) and prepared a proposed revised work programme and draft provisional agenda for FP 47. While doing so, the Sub-Committee agreed to invite the Committee to:

.1 delete the following work programme items, as work on them has been completed:

---

*Mr. R. Eberly
Commandant (G-MSE-4)
United States Coast Guard
2100 Second Street, S.W.
Washington, DC 20593-0001
United States of America
Tel: +1 202 267 1444
Fax: +1 202 267 4816
E-mail: reberly@comdt.uscg.mil

.1.1 item L.1 - Development of guidelines for ships operating in Arctic ice-covered waters; and

.1.2 item L.4 - Revision of resolution A.602(15);

.2 extend the target completion dates of the following work programme items:

.2.1 item H.2 - Unified interpretations of SOLAS chapter II-2 and related fire test procedures, to 2004,

and include the words the "FSS Code" in the title;

.3 replace the target completion date by the number of sessions needed to complete the work for the following work programme items:

.3.1 item H.1 - Recommendation on evacuation analysis for new and existing passenger ships 2 sessions

and assign a low priority to the item; and

.3.2 item L.3 - Smoke control and ventilation 2 sessions

.4 add the following subitems under work programme item on "Analysis of fire casualty records", as follows:

.4.1 item 1 - Analysis of fire casualty records

.1 use of smoke helmet type breathing apparatus 2003

.2 revision of the fire casualty record 2003;

.5 renumber the work programme items accordingly.

13.2 The Committee was invited to approve the proposed revised work programme of the Sub-Committee and draft provisional agenda for FP 47, as set out in annex 12.

Arrangements for the next session

13.3 The Sub-Committee tentatively agreed to establish, at FP 47, working groups on the following items:

.1 unified interpretations to SOLAS chapter II-2, the FSS Code and related fire test procedures;

.2 large passenger ship safety; and

.3 performance testing and approval standards for fire safety systems,

and drafting groups on the revision of the Fishing Vessel Safety Code and Voluntary Guidelines and analysis of fire casualty records.

13.4 The Sub-Committee recalled that, following consideration of agenda items 10, 11 and 12, it had agreed to establish correspondence groups on the following high priority items:

.1 revision of the fishing vessel Safety Code and Voluntary Guidelines;

.2 large passenger ship safety; and

.3 performance testing and approval standards for fire safety systems.

13.5 The Sub-Committee noted that its forty-seventh session had been tentatively scheduled to take place from 10 to 14 February 2003.

14 ELECTION OF CHAIRMAN AND VICE-CHAIRMAN FOR 2003

14.1 The Sub-Committee, in accordance with the Rules of Procedure of the Maritime Safety Committee, unanimously re-elected Mr. K. Yoshida (Japan), as Chairman and Mr. J.C. Cubisino (Argentina), as Vice-Chairman, for 2003.

15 ANY OTHER BUSINESS

Recommendation for the installation of partially weathertight hatch covers

15.1 The Sub-Committee recalled that SLF 42, in considering the draft Recommendation for the installation of partially weathertight hatch covers on board containerships, contained in the annex to document MSC 67/19/9 (France), requested the Sub-Committee to consider the recommendation's section dealing with the capacity of fixed gas fire-extinguishing systems and provide comments to the SLF Sub-Committee, as appropriate.

15.2 The Sub-Committee also recalled that, at FP 45, it noted that IACS had developed a Unified Interpretation on non-weathertight hatch covers above the superstructure deck (SLF 42/INF.7) which, *inter alia*, recommends a ten percent increase in the quantity of the fire-extinguishing gas to compensate for the possible loss of such media through hatch cover openings and that the development of the fire safety provisions of this unified interpretation was based on fire testing, and agreed that this Unified Interpretation is available and could be used in the meantime by the maritime industry as guidance for existing containerships until work on this matter was completed by IMO.

15.3 Having agreed to complete the fire safety aspects of the draft recommendation at this session, the Sub-Committee noted that IACS and other interested parties were invited to provide testing data, if available, for use by the Sub-Committee as appropriate.

15.4 In this context, the Sub-Committee also noted the outcome of SLF 44 (FP 46/2/1) on matters pertaining to the Recommendation for the installation of partially weathertight hatch covers on board containerships.

15.5 In noting that IACS had agreed to provide test data on fixed gas fire-extinguishing systems in respect to their interpretation (SLF 42/INF.7) to FP 46, the observer from IACS informed the Sub-Committee that:

.1 Appendix B of NFPA 12 indicates that for pits having partially open tops (i.e. open area is less than 3% of the cubic volume expressed in square feet), the "total flooding" approach for calculating the amount of CO_2 would be acceptable,

but suggests a 5 kg increase of CO_2 per square metre of open area to cover leakage.

.2 While NFPA does not specifically indicate if the 5 kg/m^2 should be considered as a leakage rate or a total amount, it is assumed the same to be a leakage rate per minute. When considering the over-pressurization effects during the prolonged discharge of CO_2 within a cargo hold, air ingress, etc., the same is thought to be reasonable. And considering a minimum hold time of at least 30 min, the increase in quantity of CO_2 equals 5 kg/m^2/min x Open Area of Gaps (m^2) x 30 min. This equates to roughly a 4.5% - 6% increase in CO_2, by weight, for a typical cargo hold fitted with non-tight hatch covers, depending upon the particular details (volume of hold, gap area, etc.).

15.6 The delegation of Germany stated that the IACS unified interpretation had been revised since its submission to SLF 42. The delegation of Germany further informed the Sub-Committee that an updated IACS interpretation had been submitted to SLF 43, but the updated interpretation no longer covers fire protection related matters. Noting the statement by the delegation of Germany, the Sub-Committee requested IACS to submit an updated version of its relevant interpretation pertaining to fire protection for non-weathertight hatch covers to FP 47.

15.7 The IACS observer also informed the Sub-Committee that it is planning to submit additional information on this matter to FP 47.

15.8 The Sub-Committee was informed of a proposal by the delegation of Japan for a draft recommendation for the installation of fixed gas fire-extinguishing systems in cargo spaces covered by partially weathertight hatchway covers on board containerships as follows:

> "If a fixed carbon dioxide fire-extinguishing system is fitted in the cargo spaces fitted with partially weathertight hatchway covers, the amount of carbon dioxide should be increased 5 kg/m^2 against the envisaged maximum total area of the clear gaps between the hatchway covers for the space. The envisaged maximum total area of the clear gaps should be calculated multiplying the maximum width of clear gaps and the length of the space. If a fixed gas fire-extinguishing system other than fixed carbon dioxide system is fitted in the cargo spaces with partially weathertight hatchway covers, the amount of the gas should be increased by 10%."

15.9 With regard to the proposed interpretation contained in paragraph 15.8 above, the Sub-Committee requested the delegation of Japan to submit further information on their proposal to FP 47 since it only addressed the area of the gap and not the depth of the hold.

15.10 Having considered the above comments and proposals and noting that IACS and Japan intend to submit additional information to FP 47, the Sub-Committee agreed to consider this issue at its next session. Members were encouraged to provide additional information to FP 47.

15.11 The Secretariat was instructed to inform SLF 45 accordingly.

Proposed amendments to SOLAS chapter II-2

15.12 The Sub-Committee recalled that DSC 6 had agreed to draft amendments to regulations 3.20 and 19 of the revised SOLAS chapter II-2, as set out in annex 9 to document DSC 6/15, and invited the FP Sub-Committee to concur with the aforementioned amendments for approval at MSC 75.

15.13 Having considered proposed amendments forwarded by DSC 6, the Sub-Committee agreed to the proposed modifications to the draft amendments prepared by DSC 6, as set out in annex 13, for submission to MSC 75 for action as appropriate.

15.14 The delegation of Germany requested clarification as to the applicability of the re-drafted footnote in SOLAS chapter II-2 table 19.3, as set out in annex 13, to open-top containerships. In particular, clarification was requested as to whether, as a result of the rewritten footnote, certain cargoes of category 5.2 of the IMDG Code would become acceptable by the aforementioned footnote to be carried inside open-top holds.

Revision of the EmS Schedules

15.15 The Sub-Committee noted the concerns expressed at DSC 6 regarding the conflict between the stowage conditions of water-reactive cargoes and their reactivity under specific fire-fighting installations on board ships and that DSC 6 recognized that the aforementioned hazard could not be solved by a revision of the EmS Guide, but would have to be considered as a separate matter.

15.16 The Sub-Committee also noted that DSC 6 welcomed the informal initiative by the delegation of Germany* to host a specialized working group on this issue and that the FP Sub-Committee was invited to note the above discussion (see document DSC 6/15, paragraph 4.28).

Use of aerosol fire-extinguishing systems

15.17 The Sub-Committee noted with appreciation the document submitted by the Russian Federation (FP 46/15/1) providing information on current research regarding the feasibility of using aerosol fire-extinguishing systems for protection the cargo pump-rooms.

15.18 In this regard, the observer from ISO informed the Sub-Committee that ISO/TC 8 was currently developing a standard on aerosol fire-extinguishing systems and invited interested parties to participate.

Guidance for shore-based fire-fighters

15.19 The Sub-Committee noted with appreciation the document submitted by the United Kingdom (FP 46/15/2) informing the Sub-Committee that it intended to submit a paper to MSC 76 on the need for preparing guidance for shore-based fire-fighting personnel who are required to attend ship fires.

---

* **Co-ordinator**:
Dr. Thomas Höfer
C/o BgVV-823
Federal Institute for Health Protection of Consumers and Veterinary Medicine
Thielallee 88-92
D-14195 Berlin
Germany
E-mail: thomas.hoefer@bgvv.de
Phone: (+)49-188-8412-3267
Fax : (+)49-188-8412-3685

Cross-reference list

15.20 The Sub-Committee noted with appreciation the document submitted by Germany (FP 46/INF.4) providing a cross-reference list relating to the existing and revised SOLAS chapter II-2 and recognized that this information is very useful for development of unified interpretations of the revised SOLAS chapter II-2.

Test laboratories recognized by the Administration

15.21 The Sub-Committee noted the information provided by Norway (FP 46/15) regarding test laboratories recognized by the Administration and instructed the Secretariat to add the information to the next revision of the relevant circular.

15.22 In this context, the Secretariat informed the Sub-Committee that the latest annual FP circular on test laboratories recognized by the Administrations had been published as FP/Circ.22 on 4 January 2002.

15.23 The delegation of Italy informed the Sub-Committee that information on its Administration needed to be updated in FP/Circ.22 and the Secretariat was instructed to issue an addendum to the above FP circular accordingly.

Halon banking and reception facilities

15.24 The Secretariat informed the Sub-Committee that the latest annual FP circular on halon banking and reception facilities had been published as FP/Circ.23 on 4 January 2002.

Fire-fighting systems in machinery and other spaces

15.25 The Sub-Committee noted the document submitted by the United Kingdom (FP 46/INF.11) providing information on fire-extinguishing compound that shows promising characteristics as a viable halon alternative and expressed its appreciation for the information provided.

16 ACTION REQUESTED OF THE COMMITTEE

16.1 The Maritime Safety Committee is invited to approve this report in general and, in particular, to:

.1 approve the draft MSC circular on Interim Guidelines for evacuation analyses for new and existing passenger ships (paragraphs 3.11, 3.12, 3.18 and 3.21 and annex 2);

.2 approve the draft MSC circular on Guidelines for smoke control and ventilation systems for internal assembly stations and atriums on new passenger ships (paragraph 4.6 and annex 3);

.3 approve the draft MSC circular on Guidelines for the use and installation of detectors equivalent to smoke detectors (paragraph 5.18 and annex 4);

.4 approve the draft MSC circular on Unified interpretations of the International Code for the Application of Fire Test Procedures (FTP Code) and fire test procedures referred to in the Code (paragraph 5.20 and annex 5);

.5 agree to the correction of errors in the revised SOLAS chapter II-2 and instruct the Secretariat to initiate a procès verbale of rectification (paragraph 5.24 and annex 6);

.6 approve the draft MSC circular on Unified interpretations of the revised SOLAS chapter II-2 (paragraph 5.28 and annex 7);

.7 note that the Sub-Committee finalized its review of the fire safety provisions contained in the draft Guidelines for ships operating in Arctic ice-covered waters and forwarded its recommendations to the DE Sub-Committee for co-ordination purposes (paragraphs 6.4 and 6.5);

.8 note the outcome of the Sub-Committee's consideration of the analysis of fire casualty records and its recommendations to the FSI and STW Sub-Committees (paragraphs 7.20 to 7.23, 7.31 to 7.35);

.9 note the outcome of the Sub-Committee's consideration of the revision of resolution A.654(16) and its recommendations to the DE and STW Sub-Committees (paragraphs 8.5 to 8.8);

.10 approve the draft MSC circular on Preparation of shipboard fire control plans (paragraph 8.8 and annex 8);

.11 approve the draft Assembly resolution on Improved guidelines for marine portable fire extinguishers (paragraph 9.4 and annex 9);

.12 note the progress made on matters related to large passenger ship safety (paragraphs 11.6 to 11.11);

.13 approve the draft revised work programme of the Sub-Committee and the draft provisional agenda for FP 47 (paragraphs 13.1 and 13.2 and annex 10); and

.14 consider the proposed modifications to the draft amendments to the revised SOLAS chapter II-2 prepared by DSC 6 and take action as appropriate (paragraphs 15.12 to 15.14 and annex 11).

***

ANNEX 1

AGENDA FOR THE FORTY-SIXTH SESSION INCLUDING A LIST OF DOCUMENTS

1 Adoption of the agenda

FP 46/1	Secretariat	Provisional agenda
FP 46/1/1	Secretariat	Annotations to the provisional agenda

2 Decisions of other IMO bodies

FP 46/2	Secretariat	Outcome of BLG 6, FSI 9, DE 44, MEPC 46 and MSC 74
FP 46/2/1	Secretariat	Outcome of NAV 47, DSC 6 and SLF 44

3 Recommendation on evacuation analysis for new and existing passenger ships

FP 46/3	Chairman	Report of the working group at FP 45 (Part 2)
FP 46/3/1	Italy	Report of the correspondence group
FP 46/3/2	Germany and Norway	Simulation tools for evacuation analysis
FP 46/3/3	Germany	Application of microscopic models
FP 46/3/4	Germany	Example of application of microscopic models
FP 46/INF.2	Germany	Experience gained in the implementation of the Interim Guidelines
FP 46/INF.3	Netherlands	Influence of ship listing and ship motion on walking speed
FP 46/INF.10	Japan	Introduction of a paper on evacuation analysis
FP 46/WP.2	Working Group	Report of the Working Group

4 Smoke control and ventilation

FP 46/4	Italy	Draft Guidelines on smoke control and ventilation systems for internal assembly stations and atriums on passenger ships
FP 46/4/1	Sweden	Proposal for a MSC circular on Smoke control systems on passenger ships
FP 46/4/2	ICCL	Comments on document FP 46/4/1
FP 46/4/3	ICCL	Comments on document FP 46/INF.6
FP 46/4/4	Japan	Comments on document FP 46/4/1
FP 46/INF.6	Sweden	Research project on smoke control systems on passenger ships
FP 46/INF.7	United States	Fire aboard the passenger ship **Nieuw Amsterdam**
FP 44/5	United States	Alternate proposal for the application of smoke control systems for passenger ships
FP 46/WP.1	Drafting Group	Report of the drafting group

5 Unified interpretations of SOLAS chapter II-2 and related fire test procedures

FP 46/5	United States	Proposed unified interpretations for revised SOLAS chapter II-2 and the FTP Code
FP 46/5/1	United States	Unified interpretations for revised SOLAS chapter II-2
FP 46/5/2	France	Proposal to amend the interpretation of the FTP Code relating to the fire resistance criteria for vessel doors
FP 46/5/3	France	Proposed revision of the interpretation of the FTP Code concerning tests for surface flammability of jointings and mastics
FP 46/5/4	France	Revision of fire test procedures (FTP Code) and related fire test procedures
FP 46/5/5	Germany	Implementation of revised SOLAS chapter II-2
FP 46/5/6	Denmark	Interpretation of fire test procedures for windows in resolution A.754(18)
FP 46/5/7	United Kingdom	Combined carbon monoxide and rate of rise fire detectors
FP 46/5/8	Japan	Interpretations to the revised SOLAS chapter II-2
FP 46/5/9	Japan	Interpretation to MSC/Circ.913
FP 46/5/10	Japan	Supplementary tests to MSC/Circ.913
FP 46/5/11	Japan	Draft Guidelines for approval of flame detectors for the automatic activation of the fixed local application fire-fighting system
FP 46/5/12	Japan	Comments on document FP 46/5/8
FP 45/WP.5	Working Group	Report of the working group
FP 46/WP.9	Working Group	Report of the working group

6 Development of guidelines for ships operating in Arctic ice-covered waters

FP 46/6	Secretariat	Development of Guidelines for ships operating in Arctic ice-covered waters
FP 46/6/1	Japan	Comments on document FP 46/6
FP 46/WP.5	Secretariat	Proposed amendments to annex 1 of document FP 46/6

7 Analysis of fire casualty records

FP 46/7	Secretariat	Fire casualty on board the TOISA GRYPHON
FP 46/7/1	Secretariat	Analysis of fires caused by hot work
FP 46/7/2	United States	Hot work related casualties
FSI 8/11/1	Australia	Fires on board ships
FSI 46/WP.3	Working Group	Report of the working group

8 Revision of resolution A.654(16)

FP 46/8	ISO	Update on ISO 17631 and other ISO activities
FP 46/8/1	Poland	Comments on documents FP 46/8 and FP 46/INF.8
FP 46/INF.8	ISO	International Standard for shipboard plans for fire protection, life-saving appliances, and means of escape
FP 46/WP.7/ Rev.1	Secretariat	Draft MSC circular on preparation of shipboard fire control plans.

9 Revision of resolution A.602(15)

FP 45/WP.2	Chairman	Proposed revisions to the Revised Guidelines for marine portable fire extinguishers
FP 46/WP.4		Report of the informal group of experts

10 Revision of the fishing vessel Safety Code and Voluntary Guidelines

FP 46/10	Secretariat	Outcome of SLF 44

11 Large passenger ship safety

FP 46/11	Secretariat	Outcome of MSC 74
FP 46/11/1	United States	Gap analysis of IMO instruments
FP 46/11/2	United Kingdom	Directional Sound as an aid to passenger evacuation
FP 46/11/3	ICCL	Comments on document FP 46/11/1
FP 46/INF.5	United States	Gap analysis of IMO instruments
FP 46/INF.9	United Kingdom	Results of analysis carried out by the University of Strathclyde
MSC 73/WP.20	Working group	Large passenger ship safety
MSC 74/WP.6	Working group	Large passenger ship safety
FP 46/WP.6	Drafting group	Report of the drafting group

12 Performance testing and approval standards for fire safety systems

FP 46/12	United States	Organization and method of work
FP 46/12/1	Germany	Fire test protocols for fire extinguishing systems

13 Work programme and agenda for FP 47

FP 46/WP.8	Chairman	Work programme and agenda for FP47

14 Election of Chairman and Vice-Chairman for 2003

No document submitted

15 Any other business

FP 46/15	Norway	Test laboratories recognized by the Administration
FP 46/15/1	Russian Federation	Use of aerosol fire-extinguishing systems for the protection of cargo-pump rooms in tankers
FP 46/15/2	United Kingdom	Guidance for shore-based fire-fighters attending incidents onboard ships
FP 46/INF.4	Germany	Cross-reference list relating to the existing and new SOLAS chapter II-2 requirements
MSC 67/19/9	France	Recommendation for the installation of partially weathertight hatchway
SLF 42/INF.7	IACS	IACS Unified Interpretation LL64

16 Report to the Maritime Safety Committee

FP 46/16	Report of the Sub-Committee
FP 46/WP.10	Draft report of the Sub-Committee

* * *

FP 46/INF.1	List of Participants

***

ANNEX 2

DRAFT MSC CIRCULAR

INTERIM GUIDELINES FOR EVACUATION ANALYSES FOR NEW AND EXISTING PASSENGER SHIPS

1 The Maritime Safety Committee, at its seventy-first session (19 to 28 May 1999), having approved MSC/Circ.909 on Interim Guidelines for a simplified evacuation analysis of ro-ro passenger ships as a guide for the implementation of SOLAS regulation II-2/28-1.3, requested the Sub-Committee on Fire Protection (FP) to also develop guidelines on evacuation analysis for passenger ships in general and high-speed passenger craft.

2 The Committee, at its seventy-fourth session (30 May to 8 June 2001), following a recommendation of the forty-fifth session of the FP Sub-Committee, approved MSC/Circ.1001 on Interim Guidelines for a simplified evacuation analysis of high-speed passenger craft.

3 The Committee, at its [seventy-fifth session (15 to 24 May 2002)], at the proposal of the forty-sixth session of the FP Sub-Committee, approved Interim Guidelines on evacuation analyses for new and existing passenger ships, including ro-ro passenger ships, as set out in the annexes to the present circular.

4 The annexed Interim Guidelines offer the possibility of using two distinct methods:

.1 a simplified evacuation analysis (annex 1); and/or

.2 an advanced evacuation analysis (annex 2).

5 It is to be noted that the acceptable evacuation times in these guidelines are based on an analysis of fire risk.

6 The Committee, noting that both methods of evacuation analysis will still need to be validated further, agreed that the Guidelines have an interim nature and that the evacuation analysis methods should then be reviewed in the light of the results of experience with the present Interim Guidelines, ongoing research and development aiming at applying only the advanced evacuation method and, when available, analyses of actual events utilizing the Interim Guidelines.

7 Member Governments are invited to bring the annexed Interim Guidelines (in annexes 1 and 2) to the attention of all those concerned and, in particular to:

.1 recommend them to use these Interim Guidelines when conducting evacuation analyses on new ro-ro passenger ships in compliance with SOLAS regulation II-/28-1.3 and regulation II-2/13.7.4 (which will enter into force on 1 July 2002); and

.2 encourage them to conduct, on a voluntary basis, evacuation analyses on existing passenger ships and on new passenger ships other than ro-ro passenger ships using these Interim Guidelines.

8 Member Governments are also encouraged to:

.1 collect and submit to the Sub-Committee on Fire Protection for further consideration any information and data resulting from research and development activities, full-scale tests and findings on human behaviour which may be relevant for the necessary future upgrading of the present Interim Guidelines;

.2 submit to the Sub-Committee on Fire Protection information on experience gained in the implementation of the Interim Guidelines; and

.3 use the Interim Guidance on validation/verification of evacuation simulation tools provided in annex 3 to the present circular when assessing the ability of evacuation simulation tools to perform an advanced evacuation analysis.

9 This circular replaces MSC/Circ.909.

ANNEX 1

INTERIM GUIDELINES FOR A SIMPLIFIED EVACUATION ANALYSIS OF PASSENGER SHIPS

1 General

1.1 The purpose of these Guidelines is to present the methodology for conducting a simplified evacuation analysis and to:

.1 identify and eliminate, as far as practicable, congestion which may develop during an abandonment, due to normal movement of passengers and crew along escape routes, taking into account the possibility that crew may need to move along these routes in a direction opposite the movement of passengers; and

.2 demonstrate that escape arrangements are sufficiently flexible to provide for the possibility that certain escape routes, assembly stations, embarkation stations or survival craft may be unavailable as a result of a casualty.

2 Definitions

2.1 *Persons load* is the number of persons considered in the means of escape calculations contained in chapter 13 of the Fire Safety Systems (FSS) Code.

2.2 *Awareness time (A)* is the time it takes for people to react to the situation. This time begins upon initial notification (e.g. alarm) of an emergency and ends when the passenger has accepted the situation and begins to move towards an assembly station.

2.3 *Travel time (T)* is defined as the time it takes for all persons on board to move from where they are upon notification to the assembly stations and then on to the embarkation stations.

2.4 *Embarkation time (E) and launching time (L),* the sum of which defines the time required to provide for abandonment by the total number of persons on board.

3 Method of evaluation

The steps in the evacuation analysis specified as below.

3.1 Description of the system:

.1 Identification of assembly stations.

.2 Identification of escape routes.

3.2 Assumptions

This method of estimating evacuation time is basic in nature and, therefore, common evacuation analysis assumptions should be made as follows:

.1 all passengers and crew will begin evacuation at the same time and will not hinder each other;

.2 passengers and crew will evacuate via the main escape route, as referred to in SOLAS regulation II-2/13;

.3 initial walking speed depends on the density of persons, assuming that the flow is only in the direction of the escape route, and that there is no overtaking;

.4 passenger load and initial distribution are assumed in accordance with chapter 13 of the FSS Code;

.5 full availability of escape arrangements is considered, unless otherwise stated;

.6 people can move unhindered;

.7 counterflow is accounted for by a counterflow factor; and

.8 effects of ship's motions, passenger age and mobility impairment, flexibility of arrangements, unavailability of corridors, restricted visibility due to smoke, are accounted for in a safety factor.

3.3 Scenarios to be considered

3.3.1 As a minimum, four scenarios (Cases 1, 2, 3 and 4) should be considered for the analysis as follows:

.1 Case 1 (primary evacuation case, night) and Case 2 (primary evacuation case, day) in accordance with chapter 13 of the FSS Code; and

.2 Cases 3 and 4 (secondary evacuation cases). In these cases only the main vertical zone, which generates the longest travel time, is further investigated. These cases utilize the same population demographics as in Case 1 (for Case 3) and as in Case 2 (for Case 4). One of the two following alternatives is to be considered for both Case 3 and Case 4:

2.1 Alternative 1 - Only 50% of the stairways capacity previously used within the identified main vertical zone is considered available for the analysis; or,

2.2 Alternative 2 – 50% of the persons in one of the main vertical zones neighbouring the identified main vertical zone are forced to move into the zone and to proceed to the assembly station through that zone.

3.3.2 If the total number of persons on board calculated as indicated in the above cases exceeds the maximum number of persons the ship will be certified to carry, the initial distribution of people should be scaled down so that the total number of persons is equal to what the ship will be certified to carry.

3.3.3 Additional relevant scenarios may be considered as appropriate.

3.4 Calculation of the evacuation time

The following components should be considered:

.1 The awareness time (*A*) should be 10 min for the night time scenarios and 5 min for the day time scenarios.

.2 The method to calculate the travel time (*T*) is given in appendix 1.

.3 Embarkation time (*E*) and launching time (*L*).

3.5 Performance standards

3.5.1 The following performance standards, as illustrated in figure 3.5, should be complied with:

Calculated total evacuation time: $A + T + 2/3\ (E + L) \leq n$ (1)

$E + L \leq 30'^{*}$ (2)

3.5.2 In performance standard (1):

.1 for ro-ro passenger ships, $n = 60$; and

.2 for passenger ships other than ro-ro passenger ships, $n = 60$ if the ship has no more than 3 main vertical zones; and 80 if the ship has more than 3 main vertical zones.

3.5.3 Performance standard (2) complies with SOLAS regulation III/21.1.4.

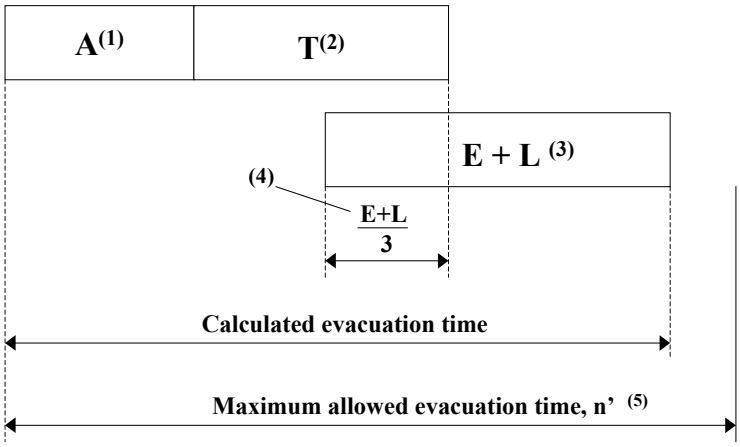

(1): 10' in Case 1 and Case 3, 5' in Case 2 and Case 4
(2): Calculated as in the Appendix to these Guidelines
(3): Maximum 30' in compliance with SOLAS Reg. III/21.1.4
(4): Overlap time = 1/3 (E+L)
(5): values of n (minutes) provided in paragraph 3.5.2

Figure 3.5.3

* A single apostrophe (') denotes minutes and a double Apostrophe (") denotes seconds.

3.6 Calculation of $E + L$

3.6.1 $E + L$ should be calculated separately based upon:

.1 the results of full scale trials on similar ships and evacuation systems; or

.2 data provided by the manufacturers. However, in this case, the method of calculation should be documented, including the value of safety factor used.

3.6.2 For cases where neither of the two above methods can be used, $E + L$ should be assumed equal to 30 min.

3.7 Identification of congestion

Congestion is identified by either of the following criteria:

.1 initial density equal to or greater than 3.5 persons/m^2; or

.2 significant queues (accumulation of more than 1.5 persons per second between ingress and exit from a point).

4 Corrective actions

4.1 For new vessels, if the total evacuation time calculated, as described in paragraph 3.5 above, is in excess of the required total evacuation time, corrective actions should be considered at the design stage by suitably modifying the arrangements affecting the evacuation system in order to reach the required total evacuation time.

4.2 For existing vessels, if the total evacuation time calculated, as described in paragraph 3.5 above, is in excess of the required total evacuation time, on-board evacuation procedures should be reviewed with a view toward taking appropriate actions which would reduce congestion which may be experienced in locations as indicated by the analysis.

5 Documentation

The documentation of the analysis should report on the following items:

.1 the basic assumptions for the analysis;

.2 a schematic representation of the layout of the zones subjected to the analysis;

.3 the initial distribution of persons for each considered scenario;

.4 the methodology used for the analysis if different from these interim guidelines;

.5 details of the calculations;

.6 the total evacuation time; and

.7 the identified congestion points.

APPENDIX 1

METHOD TO CALCULATE THE TRAVEL TIME (T)

1 PARAMETERS TO BE CONSIDERED

1.1 Clear width (W_c)

Clear width is measured off the handrail(s) for corridors and stairways and the actual passage width of a door in its fully open position.

1.2 Initial density of persons (D)

The initial density of persons in an escape route is the number of persons (p) divided by the available escape route area pertinent to the space where the persons are originally located and expressed in (p/m^2).

1.3 Speed of persons (S)

The speed (m/s) of persons along the escape route depends on the specific flow of persons (as defined in 1.4) and on the type of escape facility. People speed values are given in tables 1.1 (initial speed) and 1.3 below (speed after transition point as a function of specific flow).

1.4 Specific flow of persons (F_s)

Specific flow (persons/ms) is the number of escaping persons past a point in the escape route per unit time per unit of clear width W_c of the route involved. Values of F_S are given, in table 1.1 (initial F_s as a function of initial density) and in table 1.2 (maximum value) below.

Table 1.1* - values of initial specific flow and initial speed as a function of density.

Type of facility	Initial density D (p/m^2)	Initial specific flow Fs (p/(ms))	Initial speed of persons S (m/s)
Corridors	0	0	1.2
	0.5	0.65	1.2
	1,9	1.3	0.67
	3.2	0.65	0.20
	≥3.5	0.32	0.10

Table 1.2 * - value of maximum specific flow

Type of facility	Maximum specific flow Fs (p/(ms))
Stairs (down)	1.1
Stairs (up)	0.88
Corridors	1.3
Doorways	1.3

* Data derived from land-based stairs, corridors and doors in civil building and extracted from the publication "SFPE Fire Protection Engineering Handbook, 2nd edition, NFPA 1995"

Table 1.3* - Values of specific flow and speed

Type of facility	Specific flow *Fs* (p/(ms))	Speed of persons *S* (m/s)
Stairs (down)	0	1.0
	0.54	1.0
	1.1	0.55
Stairs (up)	0	0.8
	0.43	0.8
	0.88	0.44
Corridors	0	1.2
	0.65	1.2
	1.3	0.67

1.5 Calculated flow of persons (F_c)

The calculated flow of persons (p/s) is the predicted number of persons passing a particular point in an escape route per unit time. It is obtained from:

$$F_c = F_s\, W_c \qquad (1.5)$$

1.6 Flow time (t_F)

Flow time (s) is the total time needed for N persons to move past a point in the egress system, and is calculated as:

$$t_F = N / F_c \qquad (1.6)$$

1.7 Transitions

Transitions are those points in the egress system where the type (e.g. from a corridor to a stairway) or dimension of a route changes or where routes merge or ramify. In a transition, the sum of all the outlet-calculated flow is equal to the sum of all the inlet-calculated flow:

$$\Sigma\, F_c(in)_i = \Sigma\, F_c(out)_j \qquad (1.7)$$

where:

$F_c(\text{in})_i$ = calculated flow of route (i) arriving at transition point
$F_c(\text{out})_j$ = calculated flow of route (j) departing from transition point

1.8 Travel time T, Safety factor and counterflow factor

Travel time T expressed in seconds as given by:

$$T = (\gamma + \delta)\, t_I \qquad (1.8)$$

where:

γ is the safety factor to be taken equal to 2.0 for Cases 1 & 2 and 1.3 for Cases 3 & 4
δ is the counterflow factor to be taken equal to 0.30
t_I is the highest travel time expressed in seconds in ideal conditions resulting from application of the calculation procedure outlined in paragraph 2 of this appendix.

* Data derived from land-based stairs, corridors and doors in civil building and extracted from the publication "SFPE Fire Protection Engineering Handbook, 2nd edition, NFPA 1995"

2 Procedure for calculating the travel time in ideal conditions

2.1 Symbols

To illustrate the procedure, the following notation is used:

t_{stair} = Stairway travel time(s) of the escape route to the assembly station.
t_{deck} = Travel time(s) to move from the farthest point of the escape route of a deck to the stairway.
$t_{assembly}$ = Travel time(s) to move from the end of the stairway to the entrance of the assigned assembly station.

2.2 Quantification of flow time

The basic steps of the calculation are the following:

.1 Schematisation of the escape routes as a hydraulic network, where the pipes are the corridors and stairways, the valves are the doors and restrictions in general, and the tanks are the public spaces.

.2 Calculation of the density D in the main escape routes of each deck. In the case of cabin rows facing a corridor, it is assumed that the people in the cabins simultaneously move into the corridor; the corridor density is therefore the number of cabin occupants per corridor unit area calculated considering the clear width. For public spaces, it is assumed that all persons simultaneously begin the evacuation at the exit door (the specific flow to be used in the calculations is the door's maximum specific flow); the number of evacuees using each door may be assumed proportional to the door clear width.

.3 Calculation of the initial specific flows F_s, by linear interpolation from table 1.1, as a function of the densities.

.4 Calculation of the flow F_c for corridors and doors, in the direction of the correspondent assigned escape stairway.

.5 Once a transition point is reached, formula (1.7) is used to obtain the outlet calculated flow(s) F_c. In cases where two or more routes leave the transition point, it is assumed that the flow F_c of each route is proportional to its clear width. The outlet specific flow(s), F_s, is obtained as the outlet calculated flow(s) divided by the clear width(s); two possibilities exist:

.1 F_s does not exceed the maximum value of table 1.2; the corresponding outlet speed (S) is then taken by linear interpolation from table 1.3, as a function of the specific flow; or

.2 F_s exceeds the maximum value of table 1.2 above; in this case, a queue will form at the transition point, F_s is the maximum of table 1.2 and the corresponding outlet speed (S) is taken from table 1.3.

.6 The above procedure is repeated for each deck, resulting in a set of values of calculated flows F_c and speed S, each entering the assigned escape stairway.

.7 Calculation, from N (number of persons entering a flight or corridor) and from the relevant F_c, of the flow time t_F of each stairway and corridor. The flow time t_F of each escape route is the longest among those corresponding to each portion of the escape route.

.8 Calculation of the travel time t_{deck} from the farthest point of each escape route to the stairway, is defined as the ratio of length/speed. For the various portions of the escape route, the travel times should be summed up if the portions are used in series, otherwise the largest among them should be adopted. This calculation should be performed for each deck; as the people are assumed to move in parallel on each deck to the assigned stairway, the dominant value t_{deck} should be taken as the largest among them. No t_{deck} is calculated for public spaces.

.9 Calculation, for each stair flight, of its travel time as the ratio of inclined stair flight length and speed. For each deck, the total stair travel time, t_{stair}, is the sum of the travel times of all stairs flights connecting the deck with the assembly station.

.10 Calculation of the travel time $t_{assembly}$ from the end of the stairway (at the assembly station deck) to the entrance of the assembly station.

.11 The overall time to travel along an escape route to the assigned assembly station is:

$$t_I = t_F + t_{deck} + t_{stair} + t_{assembly} \quad (2.2.11)$$

.12 The procedure should be repeated for both the day and night cases. This will result in two values (one for each case) of t_I for each main escape route leading to the assigned assembly station.

.13 Congestion points are identified as follows:

.1 in those spaces where the initial density is equal or greater than 3.5 persons/m^2; and

.2 in those locations where the difference between inlet and outlet calculated flows (F_C) is in more than 1.5 persons per second.

.14 Once the calculation is performed for all the escape routes, the highest t_I should be selected for calculating the travel time T using formula (1.8).

APPENDIX 2

EXAMPLE OF APPLICATION

1 General

1.1 This example provides an illustration on the application of the guidelines regarding cases 1 and 2. Therefore it should not be viewed as a comprehensive and complete analysis nor as an indication of the data to be used.

1.2 The present example refers to an early design analysis of arrangements of a hypothetical new cruise ship. Moreover, the performance standard is assumed to be 60 min, as for ro-ro passenger ships. It should be noted that, at the time this example was developed, no such requirement is applicable for passenger ships other than ro-ro passenger ships. This example is therefore to be considered purely illustrative.

2 Ship characteristics

2.1 The example is limited to two main vertical zones (MVZ 1 and MVZ 2) of a hypothetical cruise ship. For MVZ 1, a night scenario is considered, hereinafter called case 1 (see figure 1) while a day scenario (case 2, see figure 2) is considered for MVZ 2.

2.2 In case 1, the initial distribution corresponds to a total of 449 persons located in the crew and passengers cabins as follows: 42 in deck 5; 65 in deck 6 (42 in the fore part and 23 in the aft part); 26 in deck 7; 110 in deck 9; 96 in deck 10; and 110 in deck 11. Deck 8 (assembly station) is empty.

2.3 In case 2, the initial distribution corresponds to a total of 1138 persons located in the public spaces as follows: 469 in deck 6; 469 in deck 7; and 200 in deck 9. Deck 8 (assembly station) is empty.

3 Description of the system

3.1 Identification of assembly stations

For both MVZ 1 and MVZ 2, the assembly stations are located at deck 8, which is also the embarkation deck.

3.2 Identification of escape routes

3.2.1 In MVZ 1, the escape routes are as follows (see figure 3):

.1 Deck 5 is connected with deck 6 (and then deck 8 where assembly stations are located) through one stair (stair A) in the fore part of the zone. Four corridors (corridors 1, 2, 3 and 4) and two doors (respectively door 1 and 2) connect the cabins with stair A. The clear widths and lengths are:

Item	Wc (clear width)[m]	Length [m]	Area [m^2]	Notes
MVZ1 – deck 5 – corridor 1	0.90	13.00	11.70	To door 1
MVZ1 – deck 5 – corridor 2	0.90	20.00	18.00	To door 1
MVZ1 – deck 5 – corridor 3	0.90	9.50	8.55	To door 2
MVZ1 – deck 5 – corridor 4	0.90	20.00	18.00	To door 1
MVZ1 – deck 5 – door 1	0.90	N.A.	N.A.	To stair A
MVZ1 – deck 5 – door 2	0.90	N.A.	N.A.	To stair A
MVZ1 – deck 5 – stair A	1.35	4.67	N.A.	Up to deck 6

.2 Deck 6 is connected with deck 7 (and then deck 8) through two stairs (stairs A and B respectively in the fore and aft part of the zone). Four corridors (corridors 1, 2, 3 and 4) and two doors (doors 1 and 2) connect the fore cabins with stair A; and two corridors (corridors 5 and 6) and two doors (doors 3 and 4) connect the aft cabins with stair B. The clear widths and lengths are:

Item	Wc (clear width)[m]	Length [m]	Area [m^2]	Notes
MVZ1 – deck 6 – corridor 1	0.90	13.00	11.70	To door 1
MVZ1 – deck 6 – corridor 2	0.90	20.00	18.00	To door 1
MVZ1 – deck 6 – corridor 3	0.90	9.50	8.55	To door 2
MVZ1 – deck 6 – corridor 4	0.90	20.00	18.00	To door 1
MVZ1 – deck 6 – door 1	0.90	N.A.	N.A.	To stair A
MVZ1 – deck 6 – door 2	0.90	N.A.	N.A.	To stair A
MVZ1 – deck 6 – stair A	1.35	4.67	N.A.	Up to deck 7
MVZ1 – deck 6 – corridor 5	0.90	13.00	11.70	To door 3
MVZ1 – deck 6 – corridor 6	0.90	20.00	18.00	To door 4
MVZ1 – deck 6 – door 3	0.90	N.A.	N.A.	To stair B
MVZ1 – deck 6 – door 4	0.90	N.A.	N.A.	To stair B
MVZ1 – deck 6 – stair B	1.35	4.67	N.A.	Up to deck 7

.3 Deck 7 is connected with deck 8 through stair C (stairs A and B coming from below stop at deck 7). Arrival of stairs A and B and deck 7 cabins are connected to stair C through 8 corridors, doors are neglected here in view of simplifying this example. The clear widths and lengths are:

Item	Wc (clear width)[m]	Length [m]	Area [m^2]	Notes
MVZ1 – deck 7 – corridor 1	0.90	6.00	5.40	To stair C
MVZ1 – deck 7 – corridor 2	0.90	9.00	8.10	To corridor 7
MVZ1 – deck 7 – corridor 3	0.90	15.00	13.50	To corridor 8
MVZ1 – deck 7 – corridor 4	0.90	6.00	5.40	To stairway C
MVZ1 – deck 7 – corridor 5	0.90	14.00	12.60	To corridor 7
MVZ1 – deck 7 – corridor 6	0.90	15.00	13.50	To corridor 8
MVZ1 – deck 7 – corridor 7	0.90	11.00	26.40	From stair B
MVZ1 – deck 7 – corridor 8	0.90	9.00	21.60	From stair A To stair C
MVZ1 – deck 7 – stair C	1.40	4.67	N.A.	Up to deck 8

.4 Deck 11 is connected with deck 10 through a double stair (stair C) in the aft part of the zone. Two corridors (corridor 1 and 2) connect the cabins with stair C through two doors (respectively doors 1 and 2). The clear widths and lengths are:

Item	Wc (clear width)[m]	Length [m]	Area [m^2]	Notes
MVZ1 – deck 11 – corridor 1	0.90	36.00	32.40	To door 1
MVZ1 – deck 11 – corridor 2	0.90	36.00	32.40	To door 2
MVZ1 – deck 11 – door 1	0.90	N.A.	N.A.	To stair C
MVZ1 – deck 11 – door 2	0.90	N.A.	N.A.	To stair C
MVZ1 – deck 11 – stair C	2.80	4.67	N.A.	down to deck 10

.5 Deck 10 has a similar arrangement as deck 11. The clear widths and lengths are:

Item	Wc (clear width)[m]	Length [m]	Area [m^2]	Notes
MVZ1 – deck 10 – corridor 1	0.90	36.00	32.40	To door 1
MVZ1 – deck 10 – corridor 2	0.90	36.00	32.40	To door 2
MVZ1 – deck 10 – door 1	0.90	N.A.	N.A.	To stair C
MVZ1 – deck 10 – door 2	0.90	N.A.	N.A.	To stair C
MVZ1 – deck 10 – stair C	2.80	4.67	N.A.	down to deck 9

.6 Deck 9 has a similar arrangement as deck 11. The clear widths and lengths are:

Item	Wc (clear width)[m]	Length [m]	Area [m^2]	Notes
MVZ1 – deck 9 – corridor 1	0.90	36.00	32.40	To door 1
MVZ1 – deck 9 – corridor 2	0.90	36.00	32.40	To door 2
MVZ1 – deck 9 – door 1	0.90	N.A.	N.A.	To stair C
MVZ1 – deck 9 – door 2	0.90	N.A.	N.A.	To stair C
MVZ1 – deck 9 – stair C	2.80	4.67	N.A.	down to deck 8

.7 Deck 8, people coming from decks 5, 6 and 7 (stair C) and from decks 11, 10 and 9 (stair C) enters the muster station through paths 1 and 2. The clear widths and lengths are:

Item	Wc (clear width)[m]	Length [m]	Notes
MVZ1 – deck 8 – path 1	2.00	9.50	to assembly station
MVZ1 – deck 8 – path 2	2.50	7.50	to assembly station

3.2.2 In MVZ 2, the escape routes are as follows (see figure 4):

.1 Deck 6 is connected with deck 7 (and then deck 8 where assembly stations are located) through two stairs (stair A and B respectively) in the fore part of the zone and through a double stair (stair C) in the aft part of the zone. Two doors (respectively door A and B) connect the public space with stairs A and B; and two doors (respectively door port side (PS) and door starboard side (SB)) connect the public space with stair C. The clear widths and lengths are:

Item	Wc (clear width)[m]	Length [m]	Notes
MVZ2 – deck 6 – door A	1.00	N.A.	
MVZ2 – deck 6 – door B	1.00	N.A.	
MVZ2 – deck 6 – door C PS	1.35	N.A.	
MVZ2 – deck 6 – door C SB	1.35	N.A.	
MVZ2 – deck 6 – stair A	1.40	4.67	up to deck 7
MVZ2 – deck 6 – stair B	1.40	4.67	up to deck 7
MVZ2 – deck 6 – stair C	3.20	4.67	up to deck 7

.2 deck 7 is connected with deck 8 through the same arrangements as deck 6 to deck 7. The clear widths and lengths are:

Item	Wc (clear width)[m]	Length [m]	Notes
MVZ2 – deck 7 – door A	1.70	N.A.	
MVZ2 – deck 7 – door B	1.70	N.A.	
MVZ2 – deck 7 – door C PS	0.90	N.A.	
MVZ2 – deck 7 – door C SB	0.90	N.A.	
MVZ2 – deck 7 – stair A	2.05	4.67	up to deck 8
MVZ2 – deck 7 – stair B	2.05	4.67	up to deck 8
MVZ2 – deck 7 – stair C	3.20	4.67	up to deck 8

.3 Deck 9 is connected with deck 8 through a double stair (stair C) in the aft part of the zone. Two doors (respectively door PS and door SB) connect the public space with stair C. The clear widths and lengths are:

Item	Wc (clear width)[m]	Length [m]	Notes
MVZ2 – deck 9 – door C PS	1.00	N.A.	
MVZ2 – deck 9 – door C SB	1.00	N.A.	
MVZ2 – deck 9 – stair C	3.20	4.67	down to deck 7

.4 Deck 8, people coming from decks 6 and 7 (stairs A and B) enter directly the embarkation station (open deck) through doors A and B, while people coming from deck 9 (stair C) enter the muster station through paths 1 and 2. The clear widths and lengths are:

Item	Wc (clear width)[m]	Length [m]	Notes
MVZ2 – deck 8 – door A	2.05	N.A.	to embarkation station
MVZ2 – deck 8 – door B	2.05	N.A.	to embarkation station
MVZ2 – deck 8 – path 1	2.00	9.50	to assembly station
MVZ2 – deck 8 – path 2	2.50	7.50	to assembly station

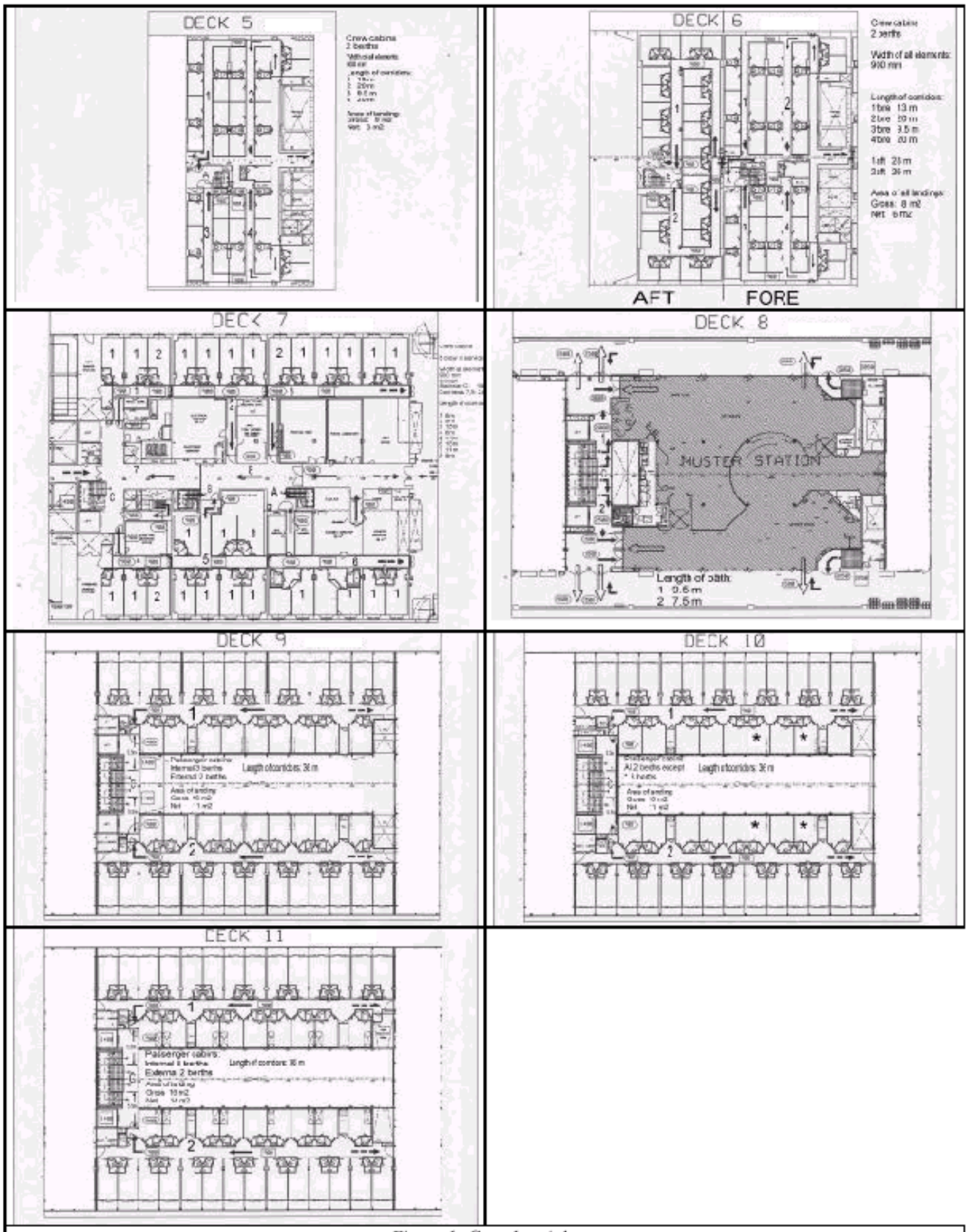

Figure 1: Case 1 - night

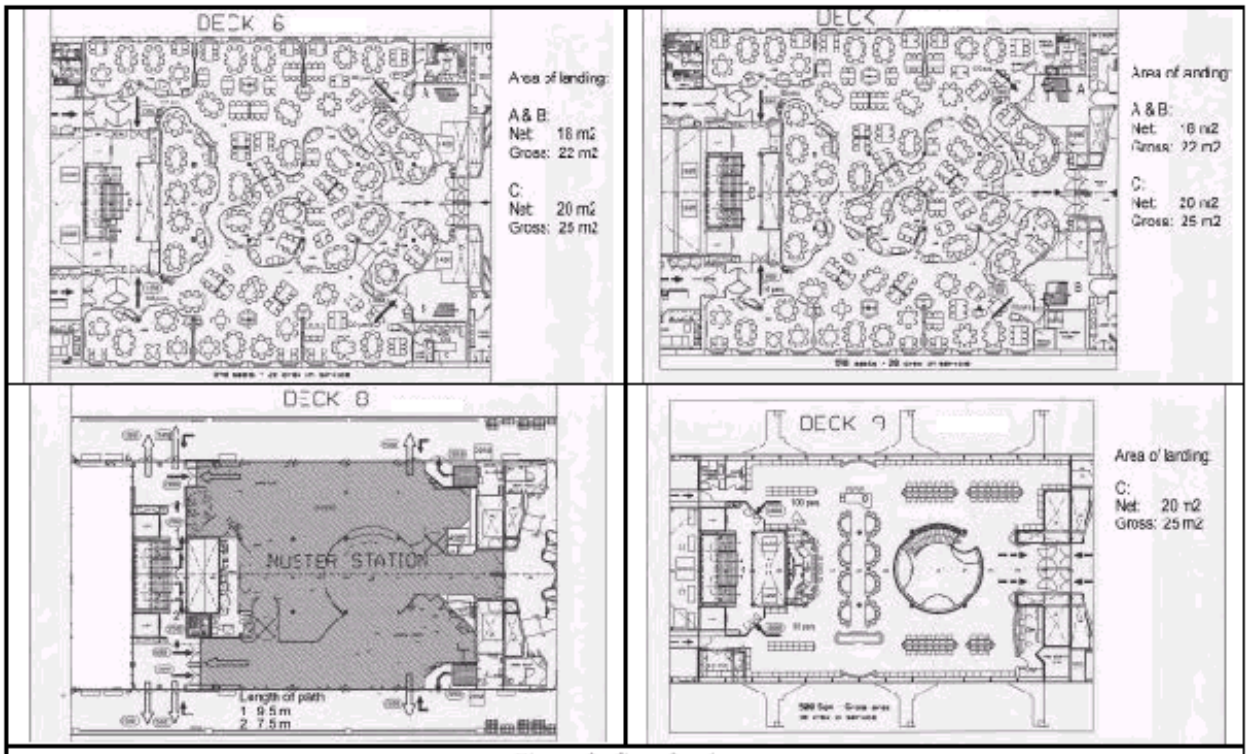

Figure 2: Case 2 - day

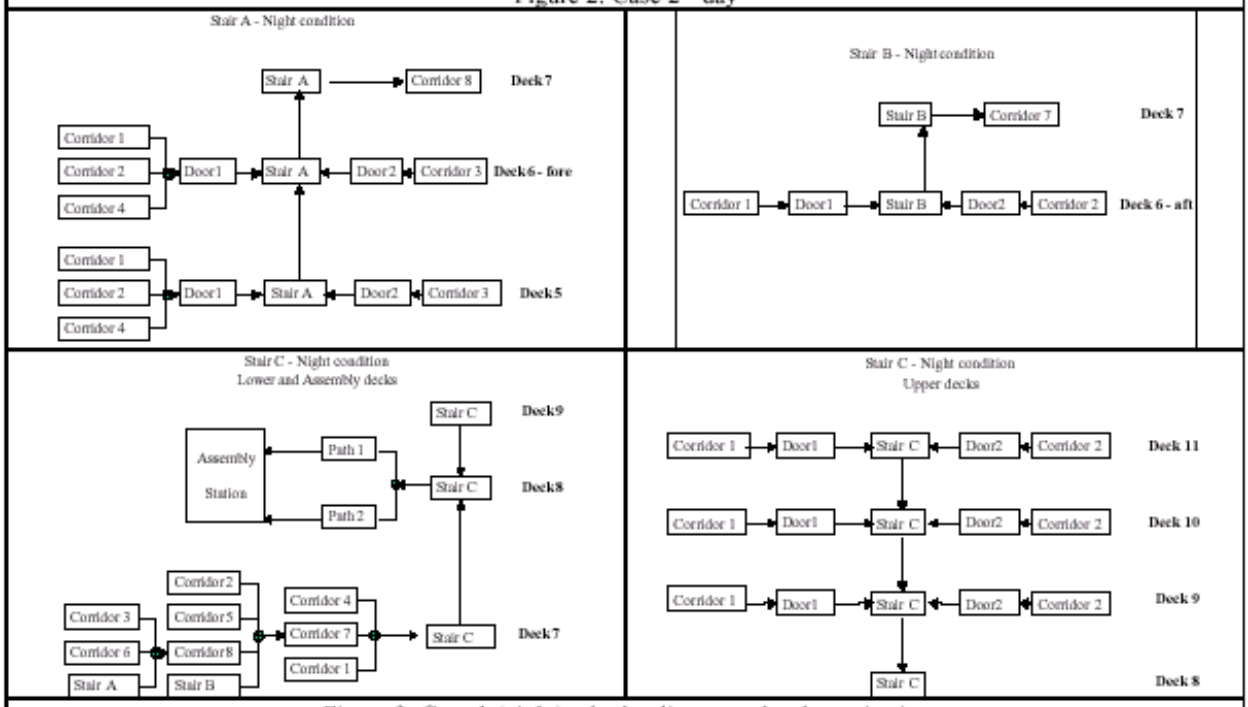

Figure 3: Case 1 (night) – hydraulic network schematisation

Figure 4: Case 2 (day) – hydraulic network schematisation

4 Scenarios considered

4.1 Case 1 refers to a day scenario in MVZ 1, according to chapter 13 of the FSS Code, the 449 persons are initially distributed as follows: 42 in deck 5; 65 in deck 6 (42 in the fore part and 23 in the aft part); 26 in deck 7; 110 in deck 9; 96 in deck 10; and 110 in deck 11. Deck 8 (assembly station) is empty. In accordance with item 2.2 of appendix 1 to the Guidelines, all persons in the cabins are assumed to simultaneously move into the corridors. The corresponding initial conditions are:

MVZ 1 - Corridors	Persons	Initial density D (p/m^2)	Initial Specific flow Fs (p/(ms))	Calculated flow Fc (p/s)	Initial Speed of persons S (m/s)
Deck 5 – corridor 1	11	0.94	0.85	0.77	1.03
Deck 5 – corridor 2	12	0.67	0.73	0.65	1.14
Deck 5 – corridor 3	8	0.94	0.85	0.77	1.04
Deck 5 – corridor 4	11	0.61	0.70	0.63	1.16
Deck 6 – corridor 1	11	0.94	0.85	0.77	1.03
Deck 6 – corridor 2	12	0.67	0.73	0.65	1.14
Deck 6 – corridor 3	8	0.94	0.85	0.77	1.04
Deck 6 – corridor 4	11	0.61	0.70	0.63	1.16
Deck 6 – corridor 5	11	0.94	0.85	0.77	1.03
Deck 6 – corridor 6	12	0.67	0.73	0.65	1.14
Deck 7 – corridor 1	4	0.74	0.76	0.69	1.11
Deck 7 – corridor 2	4	0.49	0.64	0.58	1.20
Deck 7 – corridor 3	6	0.44	0.58	0.52	1.20
Deck 7 – corridor 4	4	0.74	0.76	0.69	1.11
Deck 7 – corridor 5	6	0.48	0.62	0.56	1.20
Deck 7 – corridor 6	2	0.15	0.19	0.17	1.20
Deck 7 – corridor 7	0	0.0	N.A.	N.A.	N.A.
Deck 7 – corridor 8	0	0.0	N.A.	N.A.	N.A.
Deck 11 – corridor 1	55	1.70	1.21	1.09	0.75
Deck 11 – corridor 2	55	1.70	1.21	1.09	0.75
Deck 10 – corridor 1	48	1.48	1.11	1.00	0.83
Deck 10 – corridor 2	48	1.48	1.11	1.00	0.83
Deck 9 – corridor 1	55	1.70	1.21	1.09	0.74
Deck 9 – corridor 2	55	1.70	1.21	1.09	0.74

MVZ1 – Stairs, doors & corridors	Persons (N)		Specific Flow Fs in (p/(ms))	Maximum Specific Flow Fs (p/(ms))	Specific Flow Fs (p/(ms))	Calculated Flow Fc (p/s)	Speed of persons S (m/s)	Queue	Comments	Notes
	From current route	Total including those from other routes								
Deck 5 – door 1	34	34	2.54	1.30	1.30	1.17	N.A.	Yes	From corridors 1, 2 & 4;	1
Deck 5 – door 2	8	8	0.95	1.30	0.95	0.85	N.A.		From corridor 3;	1
Deck 5 – stair A	42	42	1.50	0.88	0.88	1.188	0.44	Yes	From doors 1 & 2;	1,2
Deck 6 – door 1	34	34	2.54	1.30	1.30	1.17	N.A.	Yes	From corridors 1, 2, & 4;	1
Deck 6 – door 2	8	8	0.95	1.30	0.95	0.85	N.A.		From corridor 3;	1
Deck 6 – stair A	42	84	2.38	0.88	0.88	1.188	0.44	Yes	From doors 1 & 2, from deck 5;	1,2
Deck 6 – door 3	11	11	0.95	1.30	0.95	0.85	N.A.		From corridor 5;	1
Deck 6 – door 4	12	12	0.81	1.30	0.81	0.73	N.A.		From corridor 4;	1
Deck 6 – stair B	23	23	2.05	0.88	0.88	1.188	0.44	Yes	From doors 3 & 4;	1,2
Deck 7 – corridor 8	8	92	0.69	1.30	0.69	1.65	1.17		From corridors 3 & 6, from deck 6, stair A;	1,3
Deck 7 – corridor 7	18	125	1.66	1.30	1.30	3.12	0.67	Yes	From corridors 2, 5 & 8, from deck 6, stair B;	1,4
Deck 7 – stair C	8	133	3.21	0.88	0.88	1.232	0.44	Yes	From corridors 1, 4 &7; up to deck 8;	1,2,5
Deck 11 – door 1	55	55	1.21	1.30	1.21	1.09	N.A.		To stair C;	1
Deck 11 – door 2	55	55	1.21	1.30	1.21	1.09	N.A.		To stair C;	1
Deck 11 – stair C	110	110	0.78	1.10	0.78	2.17	0.81		Down to deck 10;	1,2
Deck 10 – door 1	48	48	1.11	1.30	1.11	1.00	N.A.		To stair C;	1
Deck 10 – door 2	48	48	1.11	1.30	1.11	1.00	N.A.		To stair C;	1
Deck 10 – stair C	96	206	1.49	1.10	1.10	3.08	0.55	Yes	Down to deck 9;	1,2
Deck 9 – door 1	55	55	1.21	1.30	1.21	1.09	N.A.		To stair C;	1
Deck 9 – door 2	55	55	1.21	1.30	1.21	1.09	N.A.		To stair C;	1
Deck 9 – stair C	110	316	1.88	1.10	1.10	3.08	0.55	Yes	Down to deck 8;	1,2
Deck 8 – path 1	0	200	0.96	1.30	0.96	1.92	0.95		To assembly stat.	1, 6
Deck 8 – path 2	0	249	0.96	1.30	0.96	2.40	0.95		To assembly stat.	1, 6

Notes:

1 The specific flow "Fs in" is the specific flow entering the element of the escape route; the maximum specific flow is the maximum allowable flow given in Table 1.3 of Appendix 1 of the Guidelines; the specific flow is the one applicable for the calculations i.e. the minimum between "Fs in" and the maximum allowable; when "Fs in" is greater than the maximum allowable, a queue is formed.

2 Some stairs are used by both persons coming from below (or above) and persons coming from the current deck considered; in making the calculation for a stair connecting deck N to deck N+1 (or deck N-1), the persons to be considered are those entering the stairs at deck N plus those coming from all decks below (or above) deck N.

3 At deck 7, 8 persons initially move from the cabins into corridor 8 and 84 persons arrive to corridor 8 from deck 6, stair A; the total is therefore 92 persons.

4 At deck 7, 18 persons initially move from the cabins into corridor 7, 23 persons arrive to corridor 7 from deck 6 stair B and 84 persons arrive to corridor 8 from deck 7, corridor 7; the total is therefore 125 persons.

5 At deck 7, 8 persons initially move from the cabins directly to the stair C and 125 persons arrive to stair C from corridor 8; the total is therefore 133 persons.

6 At deck 8 (muster station), no persons are initially present, therefore the escape routes on this deck are then used by the total number of persons arriving from above and/or below.

4.2 Case 2 refers to a day scenario in MVZ 2, according to chapter 13 of the FSS Code, the 1138 persons are initially distributed as follows: 469 in deck 6; 469 in deck 7; and 200 in deck 9. Deck 8 (muster station) is initially empty. In accordance with item 2.2 of Appendix 1 to the Guidelines, all persons are assumed to simultaneously begin the evacuation and use the exit doors at their maximum specific flow. The corresponding initial conditions are:

MVZ2 - Doors	Persons	Initial density D (p/m^2)	Initial Specific Flow Fs (p/(ms))	Calculated Flow Fc (p/s)	Initial Speed of persons S (m/s)
Deck 6 – door A	100	N.A.	1.30	1.30	N.A.
Deck 6 – door B	100	N.A.	1.30	1.30	N.A.
Deck 6 – door C PS	134	N.A.	1.30	1.76	N.A.
Deck 6 – door C SB	135	N.A.	1.30	1.76	N.A.
Deck 7 – door A	170	N.A.	1.30	2.21	N.A.
Deck 7 – door B	170	N.A.	1.30	2.21	N.A.
Deck 7 – door C PS	65	N.A.	1.30	1.17	N.A.
Deck 7 – door C SB	64	N.A.	1.30	1.17	N.A.
Deck 9 – door C SB	100	N.A.	1.30	1.30	N.A.
Deck 9 – door C PS	100	N.A.	1.30	1.30	N.A.

MVZ2 - Stairs	Persons (N)		Specific flow Fs in (p/(ms))	Maximum specific flow Fs (p/(ms))	Specific flow Fs (p/(ms))	Calculated flow Fc (p/s)	Speed of persons S (m/s)	Queue	Comments	notes
	From current route	Total including those from other routes								
Deck 6 – stair A	100	100	0.93	0.88	0.88	1.23	0.44	Yes	up to deck 7	1
Deck 6 – stair B	100	100	0.93	0.88	0.88	1.23	0.44	Yes	up to deck 7	1
Deck 6 – stair C	269	269	1.10	0.88	0.88	2.82	0.44	Yes	up to deck 7	1
Deck 7 – stair A	170	270	1.68	0.88	0.88	1.80	0.44	Yes	up to deck 8	1, 2
Deck 7 – stair B	170	270	1.68	0.88	0.88	1.80	0.44	Yes	up to deck 8	1, 2
Deck 7 – stair C	129	398	1.61	0.88	0.88	2.82	0.44	Yes	up to deck 8	1, 2
Deck 9 – stair C	200	200	0.81	1.10	0.81	2.82	0.78		down to deck 8	
Deck 8 – path 1	0	266	1.20	1.30	1.20	2.41	0.75		from decks 7 & 9	1,3

Deck 8 – path 2	0	332	1.20	1.30	1.20	3.01	0.75		from decks 7 & 9	1,3
Deck 8 – door A	0	270	0.88	1.30	0.88	1.80	N.A.		from deck 7	1,3
Deck 8 – door B	0	270	0.88	1.30	0.88	1.80	N.A.		from deck 7	1,3

Notes:

1 The specific flow "Fs in" is the specific flow entering the element of the escape route; the maximum specific flow is the maximum allowable flow given in Table 1.3 of Appendix 1 of the Guidelines; the specific flow is the one applicable for the calculations i.e. the minimum between "Fs in" and the maximum allowable; when "Fs in" is greater than the maximum allowable, a queue is formed.

2 Some stairs are used by both persons coming from below (or above) and persons coming from the current deck considered; in making the calculation for a stair connecting deck N to deck N+1 (or deck N-1), the persons to be considered are those entering the stairs at deck N plus those coming from all decks below (or above) deck N.

3 At deck 8 (muster station), no persons are initially present, therefore the escape routes on this deck are then used by the total number of persons arriving from above and/or below.

5 Calculation of t_F, t_{deck} and t_{stair}

5.1 For case 1:

Item	Persons	Length L (m)	Calculated Flow Fc (p/s)	Speed S (m/s)	Flow time t_F (s)	Deck or stairs time, t_{deck}, t_{stairs}	Entering
	N				$t_F = N/Fc$	T = L/S	
Deck 5 – corridor 1	11	13.0	0.77	1.03	14.3	12.6	Door 1
Deck 5 – corridor 2	12	20.0	0.65	1.14	18.3	17.6	Door 1
Deck 5 – corridor 3	8	9.5	0.77	1.04	10.4	9.2	Door 2
Deck 5 – corridor 4	11	20.0	0.63	1.16	17.4	17.3	Door 1
Deck 5 – door 1	34	N.A.	1.17	N.A.	29.1	N.A.	Stair A
Deck 5 – door 2	8	N.A.	0.85	N.A.	9.4	N.A.	Stair A
Deck 5 – stair A	42	4.67	1.188	0.44	35.4	10.6	Deck 6
Deck 6 – corridor 1	11	13.0	0.77	1.03	14.3	12.6	Door 1
Deck 6 – corridor 2	12	20.0	0.65	1.14	18.3	17.6	Door 1
Deck 6 – corridor 3	8	9.5	0.77	1.04	10.4	9.2	Door 2
Deck 6 – corridor 4	11	20.0	0.63	1.16	17.4	17.3	Door 1
Deck 6 – door 1	34	N.A.	1.17	N.A.	29.1	N.A.	Stair A
Deck 6 – door 2	8	N.A.	0.85	N.A.	9.4	N.A.	Stair A
Deck 6 – stair A	84	4.67	1.188	0.44	70.7	10.6	Deck 7
Deck 6 – corridor 5	11	13.0	0.77	1.03	14.3	12.6	Door 3
Deck 6 – corridor 6	12	20.0	0.65	1.14	18.3	17.6	Door 4
Deck 6 – door 3	11	N.A.	0.85	N.A.	12.9	N.A.	Stair B
Deck 6 – door 4	12	N.A.	0.73	N.A.	16.5	N.A.	Stair B
Deck 6 – stair B	23	4.67	1.188	0.44	19.4	10.6	Deck 7
Deck 7 – corridor 1	4	6.0	0.69	1.11	5.8	5.4	Stair C

Deck 7 – corridor 2	4	9.0	0.58	1.20	6.9	7.5	Corridor 7
Deck 7 – corridor 3	6	15.0	0.52	1.20	11.5	12.5	Corridor 8
Deck 7 – corridor 4	4	6.0	0.69	1.11	5.8	5.4	Stair C
Deck 7 – corridor 5	6	14.0	0.56	1.20	10.8	11.7	Corridor 7
Deck 7 – corridor 6	2	15.0	0.17	1.20	12.5	11.5	Corridor 8
Deck 7 – corridor 8	92	11.0	1.65	1.17	55.7	9.4	Corridor 7
Deck 7 – corridor 7	125	9.0	3.12	0.67	40.1	13.4	Stair C
Deck 7 – stair C	133	4.67	1.232	0.44	108.0	10.6	Deck 8
Deck 11– corridor 1	55	36.0	1.09	0.75	50.7	48.2	Door 1
Deck 11– corridor 2	55	36.0	1.09	0.75	50.7	48.2	Door 2
Deck 11 – door 1	55	N.A.	1.09	N.A.	50.7	N.A.	Stair C
Deck 11 – door 2	55	N.A.	1.09	N.A.	50.7	N.A.	Stair C
Deck 11 – stair C	110	4.67	2.17	0.81	50.7	5.8	Deck 10
Deck 10– corridor 1	48	36.0	1.00	0.83	48.2	43.5	Door 1
Deck 10– corridor 2	48	36.0	1.00	0.83	48.2	43.5	Door 2
Deck 10 – door 1	48	N.A.	1.00	N.A.	48.2	N.A.	Stair C
Deck 10 – door 2	48	N.A.	1.00	N.A.	48.2	N.A.	Stair C
Deck 10 – stair C	206	4.67	3.08	0.55	66.9	8.5	Deck 9
Deck 9– corridor 1	55	36.0	1.09	0.74	50.7	48.4	Door 1
Deck 9– corridor 2	55	36.0	1.09	0.74	50.7	48.4	Door 2
Deck 9 – door 1	55	N.A.	1.09	N.A.	50.7	N.A.	Stair C
Deck 9 – door 2	55	N.A.	1.09	N.A.	50.7	N.A.	Stair C
Deck 9 – stair C	316	4.67	3.08	0.55	102.6	8.5	Deck 8

5.2 For case 2: since in this particular arrangement there are no corridors, the deck time is zero.

Item	Persons	Length L (m)	Calculated flow Fc (p/s)	Speed S (m/s)	Flow time t_F (s)	Deck or stairs time, t_{deck}, t_{stairs}	Entering
	N				$t_F = N/ Fc$	$t = L/S$	
Deck 6 – door A	100	N.A.	1.30	N.A	76.9	N.A.	Stair A
Deck 6 – door B	100	N.A.	1.30	N.A.	76.9	N.A.	Stair B
Deck 6 – door C PS	134	N.A.	1.76	N.A.	76.4	N.A.	Stair C
Deck 6 – door C SB	135	N.A.	1.76	N.A.	76.9	N.A.	Stair C
Deck 6 – stair A	100	4.67	1.23	0.44	81.2	10.6	Deck 7
Deck 6 – stair B	100	4.67	1.23	0.44	81.2	10.6	Deck 7
Deck 6 – stair C	269	4.67	2.82	0.44	95.5	10.6	Deck 7
Deck 7 – door A	170	N.A.	2.21	N.A	76.9	N.A.	Stair A
Deck 7 – door B	170	N.A.	2.21	N.A.	76.9	N.A.	Stair B
Deck 7 – door C PS	65	N.A.	1.17	N.A.	55.6	N.A.	Stair C
Deck 7 – door C SB	64	N.A.	1.17	N.A.	54.7	N.A.	Stair C
Deck 7 – stair A	270	4.67	1.80	0.44	149.7	10.6	Deck 8
Deck 7 – stair B	270	4.67	1.80	0.44	149.7	10.6	Deck 8
Deck 7 – stair C	398	4.67	2.82	0.44	141.3	10.6	Deck 8

Deck 8 – door A	270	N.A.	1.80	N.A.	149.7	N.A.	Embarkation
Deck 8 – door B	270	N.A.	1.80	N.A.	149.7	N.A.	Embarkation
Deck 9 – door PS	100	N.A.	1.30	N.A.	76.9	N.A.	Stair C
Deck 9 – door SB	100	N.A.	1.30	N.A.	76.9	N.A.	Stair C
Deck 9 – stair C	200	4.67	2.60	0.78	76.9	6.0	Deck 8

6 Calculation of $t_{assembly}$

6.1 Case 1: In this case, all the 429 persons use stair C (316 coming from above deck 8 and 133 from below) and, once arrived at deck 8, need to travel on deck 8 to reach the assembly station using either path 1 or path 2. The corresponding time is as follows:

Item	Persons	Length L (m)	Calculated flow Fc (p/s)	Speed S (m/s)	Flow time t_F (s)	$t_{assembly}$	Entering
	N				$t_F = N/Fc$	$t = L/S$	
Deck 8 – path 1	200	9.5	1.92	0.95	104.4	10.0	Assembly station
Deck 8 – path 2	249	7.5	2.40	0.95	103.9	7.9	Assembly station

6.2 Case 2: In this case, all the persons using stair C (totaling 598), once arrived at deck 8, need to travel through on deck 8 to reach the assembly station using either path 1 or path 2. The corresponding time is as follows:

Item	Persons	Length L (m)	Calculated Flow Fc (p/s)	Speed S (m/s)	Flow time t_F (s)	$t_{assembly}$	Entering
	N				$t_F = N/Fc$	$t = L/S$	
Deck 8 – path 1	266	9.5	2.41	0.75	110.5	12.7	Assembly station
Deck 8 – path 2	332	7.5	3.01	0.75	110.3	10.0	Assembly station

7 Calculation of T

7.1 Case 1: The travel time *T*, according to appendix 1 of the Guidelines, is the maximum t_I (equation 2.2.11) multiplied by 2.3 (sum of safety factor and counterflow factor). The maximum values of t_I for each escape route are given in the following:

Escape route on	T_{deck}	t_f	t_{stair}	$t_{assembly}$	t_I	T	Notes
Deck 11	48.2	104.4	22.7	10.0	185.3	426.2	1
Deck 10	43.5	104.4	17.0	10.0	174.8	402.0	1, 2
Deck 9	48.4	104.4	8.5	10.0	171.3	394.0	1, 2
Deck 8	0.0	104.4	0.0	10.0	124.4	286.1	
Deck 7	35.3	108	10.6	10.0	163.9	377.0	1
Deck 6 – stair A (fore)	40.4	108.0	21.2	10.0	179.6	413.1	1, 3
Deck 6 – stair B (aft)	31.0	108.0	21.2	10.0	170.2	391.5	1, 3
Deck 5	40.4	108.0	31.8	10.0	190.2	437.5	1, 3

Notes:

1 The flow time, t_f, is the maximum flow time recorded on the whole escape route from the deck where persons started evacuating up to the muster station.

2 The travel time on the stairways (t_{stair}) is the total time necessary to travel along all the stairs from the deck where persons originally started evacuating up to the deck where the muster station is located; in the present case, t_{stair} for persons moving down from deck 11 is therefore the sum of t_{stair} from deck 11 to 10 (5.7 s.), form deck 10 to 9 (8.5 s.) and from deck 9 to 8 (8.5 s.), in total 22.7 s.; similarly for the other cases.

3 The travel time on the stairways (t_{stair}) is the total time necessary to travel along all the stairs from the deck where persons originally started evacuating up to the deck where the muster station is located; in the present case, t_{stair} for persons moving up from deck 5 is therefore the sum of t_{stair} from deck 5 to 6 (10.6 s.), form deck 6 to 7 (10.6 s.) and from deck 7 to 8 (10.6 s.), in total 31.8 s.; similarly for the other cases.

Accordingly, the corresponding value of *T* is 437.5 s.

7.2 Case 2: The travel time *T*, according to appendix 1 of the Guidelines, is the maximum t_I (equation 2.2.11) multiplied by 2.3 (sum of safety factor and counterflow factor). The maximum values of t_I for each escape route are given in the following:

Escape route on	T_{deck}	t_f	t_{stair}	$t_{assembly}$	t_I	T	Notes
Deck 9	0.0	149.7	6.0	12.7	168.3	387.2	1, 2
Deck 8	0.0	149.7	0.0	12.7	162.4	373.4	
Deck 7 – stair A	0.0	149.7	10.6	0.0	160.3	368.6	
Deck 7 – stair B	0.0	149.7	10.6	0.0	160.3	368.6	
Deck 7 – stair C	0.0	141.3	10.6	12.7	164.6	378.7	2
Deck 6 – stair A	0.0	149.7	21.2	0.0	170.9	393.0	1, 3
Deck 6 – stair B	0.0	149.7	21.2	0.0	170.9	393.0	1, 3
Deck 6 – stair C	0.0	141.3	21.2	12.7	175.2	403.1	1, 2, 3

Notes:

1 The flow time, t_f, is the maximum flow time recorded on the whole escape route from the deck where persons started evacuating up to the muster station.

2 In this example, stairs A and B are already leading to the embarkation station, therefore only those escape routes passing through stair C need additional time, $t_{assembly}$, to reach the assembly station.

3 The travel time on the stairways (t_{stair}) is the total time necessary to travel along all the stairs from the deck where persons originally started evacuating up to the deck where the muster station is located; in the present case, t_{stair} for persons moving from deck 6 is therefore the sum of t_{stair} from deck 6 to 7 (10.6 s.) and from deck 7 to 8 (10.6 s.).

Accordingly, the corresponding value of *T* is 403.1 s.

8 Identification of congestion

8.1 Case 1: Congestion takes place on deck 5 (door 1 and stair A), deck 6 (door 1, stair A and B), deck 7 (corridor 7 and stair C), deck 10 (stair C) and deck 9 (stair C). However, since the total time is below the limit (see paragraph 9.1 of this example) and no design modifications are needed.

8.2 Case 2: Congestion takes place on deck 6 (stairs A, B and C) and deck 7 (stairs A, B and C). However, since the total time is below the limit (see paragraph 9.2 of this example) no design modifications are needed.

9 Performance standard

9.1 Case 1: The total evacuation time, according to paragraph 3.5 of the Guidelines is as follows:

$$A + T + 2/3\ (E+L) = 10 + 7'18'' + 20 = 37'\ 18''$$

Where:

$E + L$ is assumed to be 30'
A = 10' (night case)
T = 7' 18"

9.2 Case 2: The total evacuation time, according to paragraph 3.5 of the Guidelines is as follows:

$$A + T + 2/3\ (E+L) = 5 + 6'\ 43'' + 20 = 31'\ 43''$$

Where:

$E + L$ is assumed to be 30'
A = 5' (day case)
T = 6' 43"

ANNEX 2

INTERIM GUIDELINES FOR THE ADVANCED EVACUATION ANALYSIS OF NEW AND EXISTING PASSENGER SHIPS

(Advanced Evacuation Analysis is taken to mean a computer-based simulation that represents each occupant as an individual that has a detailed representation of the layout of a ship, and represents the interaction between the occupants and the layout.)

1 General

1.1 The purpose of this Guidelines is to present the methodology for conducting an advanced evacuation analysis and to:

.1 identify and eliminate, as far as practicable, congestion which may develop during an abandonment, due to normal movement of passengers and crew along escape routes, taking into account the possibility that crew may need to move along these routes in a direction opposite the movement of passengers; and

.2 demonstrate that escape arrangements are sufficiently flexible to provide for the possibility that certain escape routes, assembly stations, embarkation stations or survival craft may be unavailable as a result of a casualty.

2 Definitions

2.1 *Person load* is the number of persons considered in the means of escape calculations contained in chapter 13 of the Fire Safety Systems (FSS) Code.

2.2 *Response times* are intended to reflect the total time spent in pre-evacuation movement activities beginning with the sound of the alarm. This includes issues such as cue perception provision and interpretation of instructions, individual reaction times, and performance of all other miscellaneous pre-evacuation activities.

2.3 *Individual travel time* is the time incurred by an individual in moving from his/her starting location to reach the assembly station.

2.4 *Individual assembly time* is the sum of the individual response time and the individual travel time.

2.5 *Total assembly time* (t_A), is the maximum individual assembly time.

2.6 *Embarkation time* (E) and *launching time* (L), the sum of which defines the time required to provide for abandonment by the total number of persons on board.

3 Method of evaluation

3.1 Description of the system:

.1 Identification of assembly stations.

.2 Identification of escape routes.

3.2 Assumptions

This method of estimating the evacuation time is based on several idealized benchmark scenarios and the following assumptions are made:

.1 the passengers and crew are represented as unique individuals with specified individual abilities and response times;

.2 passengers and crew will evacuate via the main escape routes, as referred to in SOLAS regulation II-2/13;

.3 passenger load and initial distribution is based on chapter 13 of the FSS Code;

.4 unless otherwise stated, full availability of escape arrangements is considered;

.5 a safety margin is included in the calculation to take account of model omissions, assumptions, and the limited number and nature of the benchmark scenarios considered. These issues include:

.5.1 the crew will immediately be at the evacuation duty stations ready to assist the passengers;

.5.2 passengers follow the signage system and crew instructions (i.e. route selection is not predicted by the analysis);

.5.3 smoke, heat, and toxic fire products present in fire effluent are not considered to impact passenger/crew performance;

.5.4 family group behaviour is not considered in the analysis; and

.5.5 ship motion, heel, and trim are not considered.

3.3 Scenarios to be considered

3.3.1 As a minimum, four scenarios should be considered for the analysis. Two scenarios, namely night (Case 1) and day (Case 2), as specified in chapter 13 of the FSS Code; and, two further scenarios (Case 3 and Case 4) based on reduced escape route availability are considered for the day and night case, as specified in the Appendix.

3.3.2 Additional relevant scenarios may be considered as appropriate.

3.4 Calculation of the evacuation time

The following components should be included in the calculation of the evacuation time as specified in paragraph 3.5 and 3.6 below:

.1 The response time distribution to be used in the calculations is specified in the Appendix.

.2 The method to determine the travel time, T is given in the appendix.

.3 Embarkation time (*E*) and launching time (*L*).

3.5 Performance standard

3.5.1 The following performance standards, as illustrated in figure 3.5, should be complied with:

Calculated total evacuation time: $T + 2/3\ (E + L) \leq n$ (1)
$E + L \leq 30'$* (2)

3.5.2 In performance standard (1):

.1 for ro-ro passenger ships, $n = 60$; and

.2 for passenger ships other than ro-ro passenger ships, $n = 60$ for ships with no more than three main vertical zones and 80 for ships with more than three main vertical zones.

3.5.3 Performance standard (2) complies with SOLAS regulation III/21.1.4.

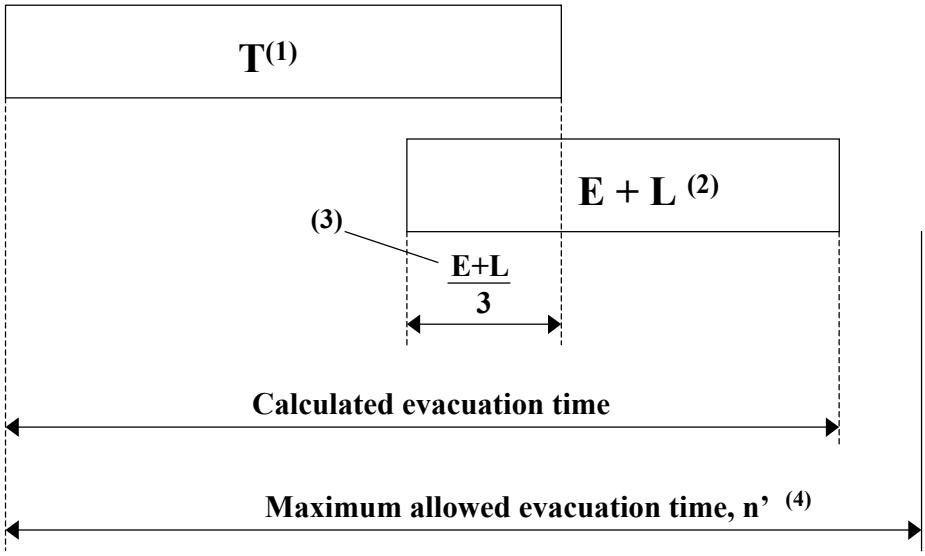

(1): Calculated as in the Appendix to these Guidelines
(2): Maximum 30' in compliance with SOLAS Reg. III/21.1.4
(3): Overlap time = 1/3 (E+L)
(4): values of n (minutes) provided in paragraph 3.5.2

Figure 3.5.3

* A single apostrophe (') denotes minutes and a double apostrophe (") denotes seconds.

3.6 Calculation of $E + L$

3.6.1 $E + L$ should be calculated based upon:

.1 the results of full scale trials on similar ship and evacuation systems; or

.2 data provided by the manufacturers. However, in this case, the method of calculation should be documented, including the value of safety factor used.

3.6.2 For cases where neither of the two above methods can be used, $E + L$ should be assumed equal to 30 min.

3.7 Identification of congestion

3.7.1 Congestion within regions is identified by local population densities exceeding 4 persons/m^2 for significant periods of time. These levels of congestion may or may not be significant to the overall assembly process.

3.7.2 If any identified congestion region is found to persist for longer than 10% of the simulated overall assembly time (t_A) it is considered to be significant.

4 Corrective actions

4.1 For new vessels, if the total evacuation time calculated, as described in paragraph 3.5 above, is in excess of the required total evacuation time, corrective actions should be considered at the design stage by suitably modifying the arrangements affecting the evacuation system in order to reach the required total evacuation time.

4.2 For existing vessels, if the total evacuation time calculated, as described in paragraph 3.5 above, is in excess of the total evacuation time, on-board evacuation procedures should be reviewed with a view toward taking appropriate actions which would reduce congestion which may be experienced in locations as indicated by the analysis.

5 Documentation

The documentation of the analysis should be provided as specified in the appendix.

APPENDIX

METHOD TO DETERMINE THE TRAVEL TIME (T) BY SIMULATION TOOLS FOR THE ADVANCED EVACUATION ANALYSIS

1 Characteristics of the models

1.1 Each person is represented in the model individually.

1.2 The abilities of each person are determined by a set of parameters, some of which are probabilistic.

1.3 The movement of each person is recorded.

1.4 The parameters should vary among the individuals of the population.

1.5 The basic rules for personal decisions and movements are the same for everyone, described by a universal algorithm.

1.6 The time difference between the actions of any two persons in the simulation should be not more than one second of simulated time, e.g. all persons proceed with their action in one second (a parallel update is necessary).

2 Parameters to be used

2.1 In order to facilitate their use, the parameters are grouped into the same 4 categories as used in other industrial fields, namely: GEOMETRICAL, POPULATION, ENVIRONMENTAL and PROCEDURAL.

2.2 Category GEOMETRICAL: layout of escape routes, their obstruction and partial unavailability, initial passenger and crew distribution conditions.

2.3 Category POPULATION: ranges of parameters of persons and population demographics.

2.4 Category ENVIRONMENTAL: static and dynamic conditions of the ship.

2.5 Category PROCEDURAL: crew members available to assist in emergency.

3 Recommended values of the parameters

3.1 Category GEOMETRICAL

General: The evacuation analysis specified in this document is aimed at measuring the performance of the vessel in reproducing benchmark scenarios rather than simulating an actual emergency situation. Four benchmark cases should be considered namely Case 1, 2, 3 and 4 (refer to paragraph 4 for detailed specifications) corresponding to primary evacuation cases (Case 1 and 2, where all the escape routes should be assumed to be in operation) and secondary evacuation cases (Case 3 and 4 where some of the escape route should be assumed to be unavailable).

3.1.1 Layout of escape routes - primary evacuation cases (Case 1 and Case 2): passengers and crew should be assumed to proceed along the primary escape routes and to know their ways up to the assembly stations; to this effect signage, low location lighting, crew training and other relevant aspects connected with the evacuation system design and operation should be assumed to be in compliance with the requirements set out in IMO instruments.

3.1.2 Layout of escape routes – secondary evacuation cases (Case 3 and Case 4): those passengers and crew who were previously assigned to the now unavailable primary escape route should be assumed to proceed along the escape routes determined by the ship designer.

3.1.3 Initial passenger and crew distribution condition. The occupant distribution should be based upon the cases defined in chapter 13 of the FSS Code, as outlined in section 4.

3.2 Category POPULATION

3.2.1 This describes the make-up of the population in terms of age, gender, physical attributes and response times. The population is identical for all scenarios with the exception of the response time and passenger initial locations. The population is made of the following mix:

Population groups - passengers	**Percentage of passengers (%)**
Females younger than 30 years	7
Females 30-50 years old	7
Females older than 50 years	16
Females older than 50, mobility impaired (1)	10
Females older than 50, mobility impaired (2)	10
Males younger than 30 years	7
Males 30-50 years old	7
Males older than 50 years	16
Males older than 50, mobility impaired (1)	10
Males older than 50, mobility impaired (2)	10
Population groups - crew	**Percentage of crew (%)**
Crew females	50
Crew males	50

Table 3.1 – Population's composition (age and gender)

All of the attributes associated with this population distribution should consist of a statistical distribution within a fixed range of values. The range is specified between a minimum and maximum value with an uniform random distribution.

3.2.2 Response time

The response time for the benchmark scenarios should be as follows:

	Minimum (s)	Average (s)	Maximum (s)
Case 1 (night)	420	600	780
Case 2 (day)	210	300	390
Case 3 (night)	420	600	780
Case 4 (day)	210	300	390

Table 3.2 – Population's response time

3.2.3 Unhindered travel speeds on flat terrain (e.g. corridors)

The maximum unhindered travel speeds to be used are those derived from data published by Ando[1] which provides male and female walk rates as a function of age. These are distributed according to figure 3.1 and represented by approximate piecewise functions shown in table 3.3.

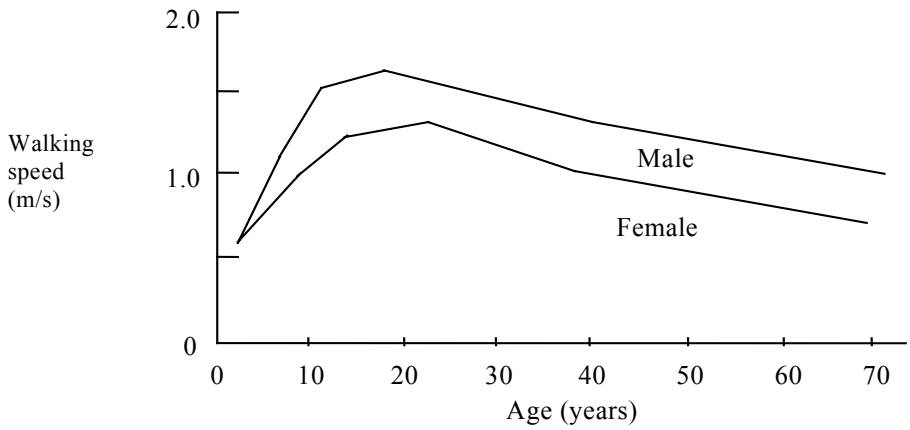

Figure 3.1 - Walking speeds as a function of age and gender

Gender	Age (years)	Speed (m/s)
Female	2 - 8.3	0.06 * age + 0.50
	8.3 - 13.3	0.04 * age + 0.67
	13.3 - 22.25	0.02 * age + 0.94
	22.25 - 37.5	-0.018 * age + 1.78
	37.5 - 70	-0.01 * age + 1.45
Male	2 - 5	0.16 * age + 0.30
	5 - 12.5	0.06 * age + 0.80
	12.5 - 18.8	0.008 * age + 1.45
	18.8 - 39.2	-0.01 * age + 1.78
	39.2 - 70	-0.009 * age + 1.75

Table 3.3 - Regression formulation for mean travel speed values[2]

For each age and gender group specified in table 3.1, the walking speed should be modelled as a statistical uniform distribution having minimum, mean and maximum values as follows:

[1] Ando K, Ota H, and Oki T, Forecasting The Flow Of People, Railway Research Review, (45), pp 8-14, 1988
[2] Galea E., Gwynne S., Lawrence P. and Fillipides L. Building EXODUS user guidelines manual“, University of Greenwich, 1998

Population groups - passengers	Walking speed on flat terrain (e.g. corridors)		
	Minimum (m/s)	**Mean (m/s)**	**Maximum (m/s)**
Females younger than 30 years	0,93	1.24	1,55
Females 30-50 years old	0,71	0,95	1,19
Females older than 50 years	0,56	0,75	0,94
Females older than 50, mobility impaired (1)	0,43	0,57	0,71
Females older than 50, mobility impaired (2)	0,37	0,49	0,61
Males younger than 30 years	1.11	1.48	1.85
Males 30-50 years old	0.97	1.30	1,62
Males older than 50 years	0,84	1.12	1,40
Males older than 50, mobility impaired (1)	0,64	0.85	1,06
Males older than 50, mobility impaired (2)	0,55	0.73	0,91
Population groups - crew	**Walking speed on flat terrain (e.g. corridors)**		
	Minimum (m/s)	**Mean (m/s)**	**Maximum (m/s)**
Crew females	0,93	1,24	1,55
Crew males	1,11	1,48	1,85

Table 3.4 – Walking speed on flat terrain (e.g. corridors)

3.2.4 Unhindered stair speeds[3]

Speeds are given on the base of gender, age and travel direction (up and down). The speeds in table 3.5 are those along the inclined stairs. It is expected that all the data above will be updated when more appropriate data and results become available.

Population groups - passengers	Walking speed on stairs (m/s)					
	Stairs down			**Stairs up**		
	Min.	**Mean**	**Max**	**Min.**	**Mean**	**Max.**
Females younger than 30 years	0.56	0.75	0.94	0.47	0.63	0.79
Females 30-50 years old	0.49	0.65	0.81	0.44	0.59	0.74
Females older than 50 years	0.45	0.60	0.75	0.37	0.49	0.61
Females older than 50, mobility impaired (1)	0.34	0,45	0.56	0.28	0,37	0.46
Females older than 50, mobility impaired (2)	0.29	0,39	0.49	0.23	0,31	0.39
Males younger than 30 years	0.76	1.01	1.26	0.50	0.67	0.84
Males 30-50 years old	0.64	0.86	1.07	0.47	0.63	0.79
Males older than 50 years	0.50	0.67	0.84	0.38	0.51	0.64
Males older than 50, mobility impaired (1)	0.38	0,51	0.64	0.29	0,39	0.49
Males older than 50, mobility impaired (2)	0.33	0.44	0.55	0.25	0,33	0.41
Population groups - crew	**Walking speed on stairs (m/s)**					
	Stairs up			**Stairs down**		
	Min.	**Mean**	**Max**	**Min.**	**Mean**	**Max.**
Crew females	0.56	0,75	0.94	0.47	0,63	0.79
Crew males	0.76	1,01	1.26	0.50	0,67	0.84

Table 3.5 – Walking speed on stairs

[3] The maximum unhindered stair speeds are derived from data generated by J.Fruin. Pedestrian planning and design, Metropolitan Association of Urban Designers and Environmental Planners, New York, 1971. The study comprises two staircase configurations.

3.2.5 Exit flow rate (doors)

The specific unit flow rate is the number of escaping persons past a point in the escape route per unit time per unit width of the route involved, and is measured in $\frac{\text{number of persons}}{\text{m s}}$. The specific unit flow rate[4] for any exit should not exceed 1.33 p/(m s).

3.3 Category ENVIRONMENTAL

Static and dynamic conditions of the ship. These parameters will influence the moving speed of persons. Presently no reliable figures are available to assess this effect, therefore these parameters could not yet be considered. This effect will not be accounted for in the scenarios (Case 1, 2, 3 and 4) until more data has been gathered.

3.4 Category PROCEDURAL

For the purposes of the four benchmark cases, it is not required to model any special crew procedures. However, the distribution of the crew for the benchmark cases should be in accordance with section 4.

3.5 It is expected that all data provided in paragraphs 3.2 and 3.3 will be updated when more appropriate data and results become available.

4 Detailed specifications (scenarios) for the 4 cases to be considered

For the purpose of conducting the evacuation analysis, the following initial distributions of passengers and crew should be considered as derived from Chapter 13 of the FSS Code, with the additional indications only relevant for the evacuation analysis. If the total number of persons on board calculated as indicated in the following cases exceeds the maximum number of persons the ship will be certified to carry, the initial distribution of people should be scaled down so that the total number of persons is equal to what the ship will be certified to carry.

4.1 Case 1 (primary evacuation case, night)

Passengers in cabins with maximum berthing capacity fully occupied; 2/3 of crew members in their cabins; of the remaining 1/3 of crew members:

.1 50% should be initially located in service spaces and behave as passengers having walking speed and reaction time as specified in paragraph 3;

.2 25% should be located at their emergency stations and should not be explicitly modelled;

.3 25% should be initially located at the assembly stations and should proceed towards passenger cabins in counterflow with evacuees; once reached passenger cabins they will move back to assembly stations.

[4] Value based on data accepted in civil building applications in UK, US and Japan; this value is also consistent with the simplified evacuation analysis method.

4.2 Case 2 (primary evacuation case, day)

Passengers in public spaces occupied to 3/4 of maximum capacity. As far as the crew is concerned:

.1 25% of the crew should be located at their emergency stations and should not be explicitly modelled;

.2 25% of the crew should be initially located at the assembly stations and should proceed towards passenger cabins in counterflow with evacuees; once reached passenger cabins they will move back to assembly stations;

.3 the remaining 50% of the crew will behave as passengers having walking speed and reaction times as specified in paragraph 3 and being initially distributed as follows: 1/3 in public spaces, 1/3 in service spaces and 1/3 in accommodation spaces.

4.3 Cases 3 and 4 (secondary evacuation case, night and day)

In these cases only the main vertical zone, which generates the longest assembly time, is further investigated. These cases utilize the same population demographics as in case 1 (for case 3) and as in case 2 (for case 4). One of the following two alternatives are to be considered for both case 3 and case 4:

.1 Alternative 1 - Only 50% of the stairways capacity previously used within the identified main vertical zone is considered available for the simulation; or, if this is not possible,

.2 Alternative 2 – 50% of the persons in one of the main vertical zones neighbouring the identified main vertical zone are forced to move into the zone and to proceed to the relevant assembly station.

5 Procedure for calculating the travel time T

5.1 The travel time, both that predicted by models and as measured in reality, is a random quantity due to the probabilistic nature of the evacuation process.

5.2 In total a minimum of 50 different simulations should be carried out for each of the four-benchmark cases. This will yield, for each case, a total of at least 50 values of t_A.

5.3 These simulations are to be made up of at least 10 different randomly generated populations (within the range of population demographics specified in paragraph 3). Simulations based on each of these different populations should be repeated at least 5 times. If these 5 repetitions produce insignificant variations in the results, the total number of populations analysed should be 50 rather than 10, with only a single simulation performed for each population.

5.4 The value of the travel time to comply with the performance standard is then taken as follows:

.1 for each of the four cases, the value t_I is taken which is higher than 95% of all the calculated values (i.e. for each of the four cases, the times t_A are ranked from lowest to highest and t_R is selected for which 95% of the ranked values are lower);

.2 a safety margin, Δ is added to t_I to account for the assumptions made in these guidelines; Δ is 600 s for cases 1 and 2 and 200 s for cases 3 and 4;

.3 the travel time for each case is then obtained as $Tc = t_I + \Delta$.

5.5 The travel time T is the highest of the four calculated travel times Tc (one for each of the four cases).

6 Documentation of the simulation model used

6.1 The assumptions made for the simulation must be stated. Assumptions that contain simplifications above those in paragraph 3.2 of the Interim Guidelines for the advanced evacuation analysis of new and existing passenger ships, should not be made.

6.2 The documentation of the algorithms should contain:

.1 the variables used in the model to describe the dynamics, e.g., walking speed and direction of each person;

.2 the functional relation between the parameters and the variables;

.3 the type of update, e.g. the order in which the persons move during the simulation (parallel, random sequential, ordered sequential or other);

.4 the representation of stairs, doors, assembly stations, embarkation stations, and other special geometrical elements and their influence on the variables during the simulation (if there is any) and the respective parameters quantifying this influence; and

.5 a detailed user guide/manual specifying the nature of the model and its assumptions and guidelines for the correct use of the model and interpretations of results should be readily available.

6.3 The results of the analysis should be documented by means of:

.1 details of the calculations;

.2 the total evacuation time; and

.3 the identified congestion points.

ANNEX 3

INTERIM GUIDANCE ON VALIDATION/VERIFICATION OF EVACUATION SIMULATION TOOLS

Software verification is an ongoing activity. For any complex simulation software, verification is an ongoing activity and is an integral part of its life cycle. There are at least four forms of verification that evacuation models should undergo. These are:

.1 component testing,

.2 functional verification,

.3 qualitative verification, and

.4 quantitative verification.

(This procedure has been highlighted in ISO document ISO/TR 13387-8:1999)

Component Testing

Component testing involves checking that the various components of the software perform as intended. This involves running the software through a battery of elementary test scenarios to ensure that the major sub-components of the model are functioning as intended. The following is a non-exhaustive list of suggested component tests that should be included in the verification process:

Test 1: Maintaining set walking speed in corridor.

One person in a corridor 2 m wide and 40 m long with a walking speed of 1 m/s should be demonstrated to cover this distance in 40 s.

Test 2: Maintaining set walking speed up staircase

One person on a stair 2 m wide and a length of 10 m measured along the incline with a walking speed of 1 m/s should be demonstrated to cover this distance in 10 s.

Test 3: Maintaining set walking speed down staircase

One person on a stair 2 m wide and a length of 10 m measured along the incline with a walking speed of 1 m/s should be demonstrated to cover this distance in 10 s.

Test 4: Exit flow rate

100 persons in a room of size 8 m by 5 m with a 1 m exit located centrally on the 5 m wall. The flow rate over the entire period should not exceed 1.33 p/s.

Test 5: Response time

Ten persons in a room of size 8 m by 5 m with a 1 m exit located centrally on the 5 m wall. Impose response times as follows uniformly distributed in the range between 10 s and 100 s. Verify that each occupant starts moving at the appropriate time.

Test 6: Rounding corners

Twenty persons approaching a left-hand corner (see Fig. 1) will successfully navigate around the corner without penetrating the boundaries.

Test 7: Assignment of population demographics parameters

Choose a panel consisting of males 30-50 years old from table 3.4 in the appendix to the Interim Guidelines for the advanced evacuation analysis of new and existing ships and distribute the walking speeds over a population of 50 people. Show that the distributed walking speeds are consistent with the distribution specified in the table.

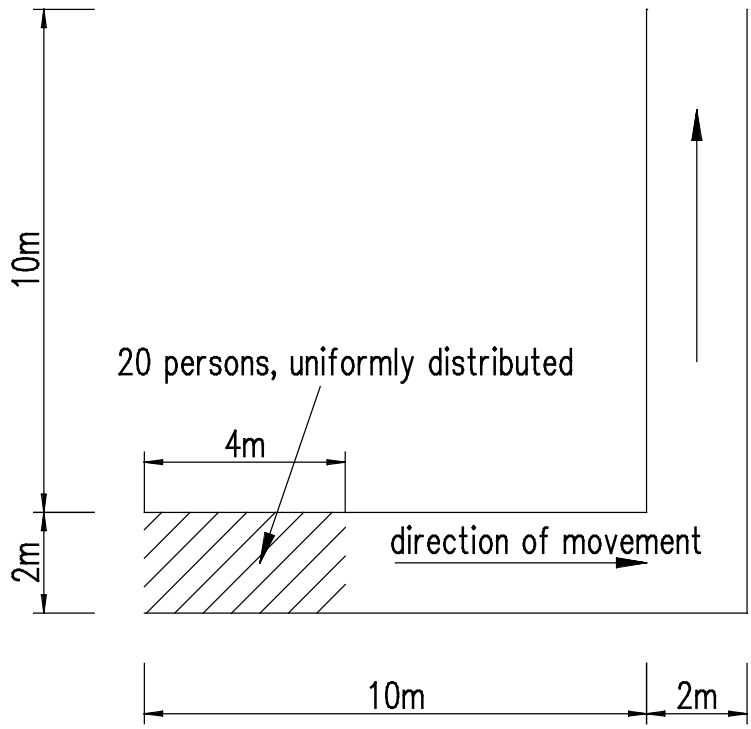

Figure 1: Transverse corridor

Functional verification

Functional verification involves checking that the model possesses the ability to exhibit the range of capabilities required to perform the intended simulations. This requirement is task specific. To satisfy functional verification the model developers must set out in a comprehensible manner the complete range of model capabilities and inherent assumptions and give a guide to the correct use of these capabilities. This information should be readily available in technical documentation that accompanies the software.

Qualitative verification

The third form of model validation concerns the nature of predicted human behaviour with informed expectations. While this is only a qualitative form of verification, it is nevertheless important, as it demonstrates that the behavioural capabilities built into the model are able to produce realistic behaviours.

Test 8: Counterflow – two rooms connected via a corridor

Two rooms 10 m wide and long connected via a corridor 10 m long and 2 m wide starting and ending at the centre of one side of each room. Choose a panel consisting of males 30-50 years old from table 3.4 in the appendix to the Interim Guidelines for the advanced evacuation analysis of new and existing ships with instant response time and distribute the walking speeds over a population of 100 people.

Step 1: One hundred persons move from room 1 to room 2, where the initial distribution is such that the space of room 1 is filled from the left with maximum possible density (see figure 2). The time the last person enters room 2 is recorded.

Step 2: Step one is repeated with an additional ten, fifty, and one hundred persons in room 2. These persons should have identical characteristics to those in room 1. Both rooms move off simultaneously and the time for the last persons in room 1 to enter room 2 is recorded. The expected result is that the recorded time increases with the number of persons in counterflow increases.

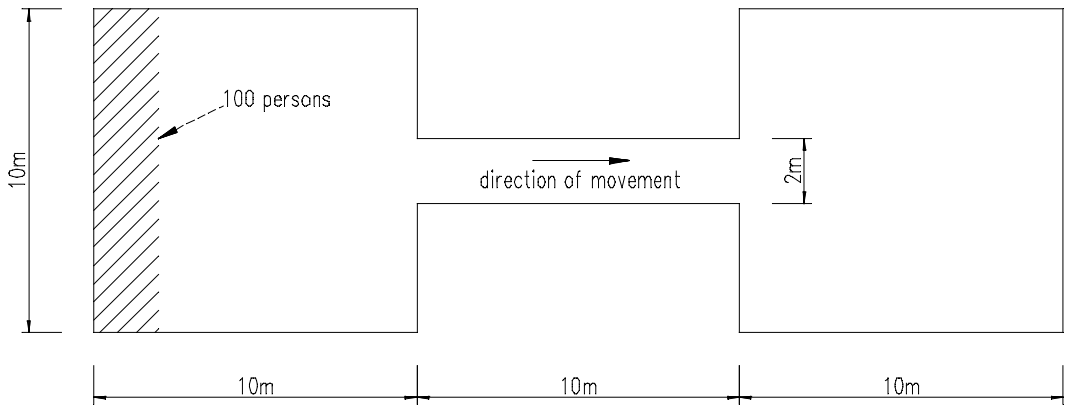

Figure 2: Two rooms connected via a corridor

Test 9: Exit flow: crowd dissipation from a large public room

Public room with four exits and 1000 persons (see figure 3) uniformly distributed in the room. People leave via the nearest exits. Choose a panel consisting of males 30-50 years old from table 3.4 in the appendix to the Interim Guidelines for the advanced evacuation analysis of new and existing ships with instant response time and distribute the walking speeds over a population of 1000 people.

Step 1: Record the time the last person leaves the room.

Step 2: Close doors 1 and 2 and repeat step 1.

The expected result is an approximate doubling of the time to empty the room.

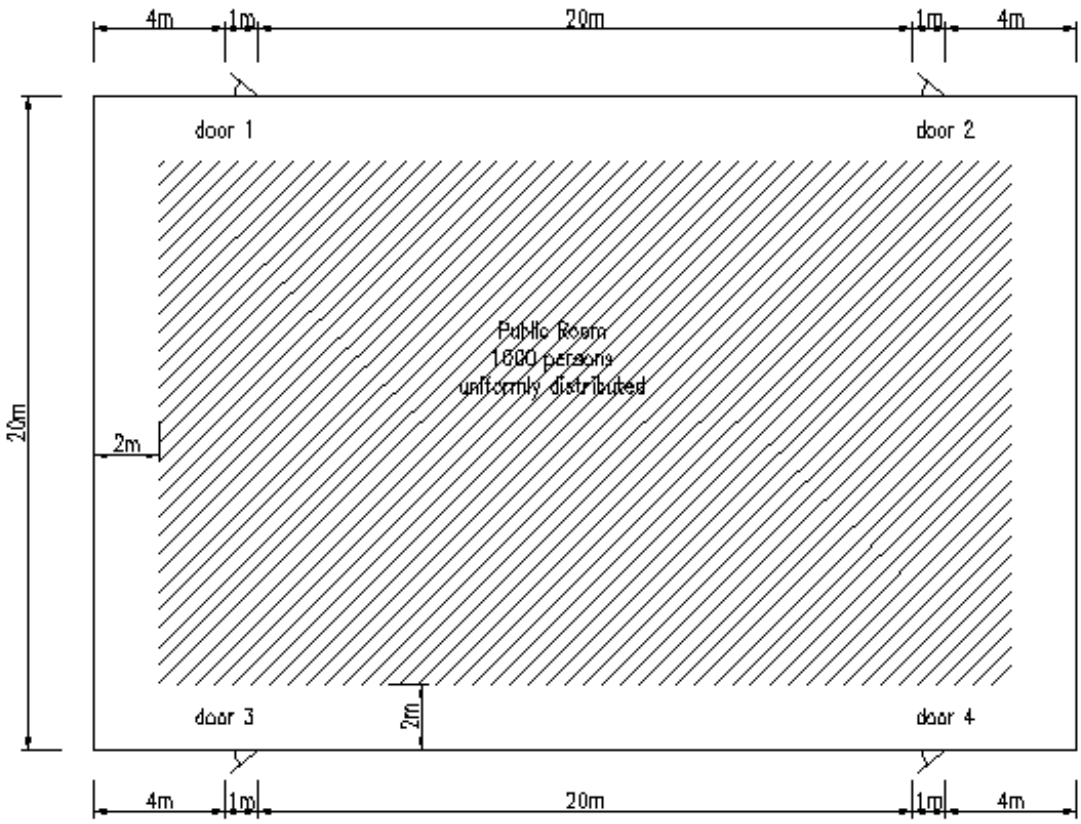

Figure 3: Exit flow from a large public room

Test 10: Exit route allocation

Construct a cabin corridor section as shown in figure 3 populated as indicated with a panel consisting of males 30-50 years old from table 3.4 in the appendix to the Interim Guidelines for the advanced evacuation analysis of new and existing ships with instant response time and distribute the walking speeds over a population of 23 people. The people in cabins 1, 2, 3, 4, 7, 8, 9, and 10 are allocated the main exit. All the remaining passengers are allocated the secondary exit. The expected result is that the allocated passengers move to the appropriate exits.

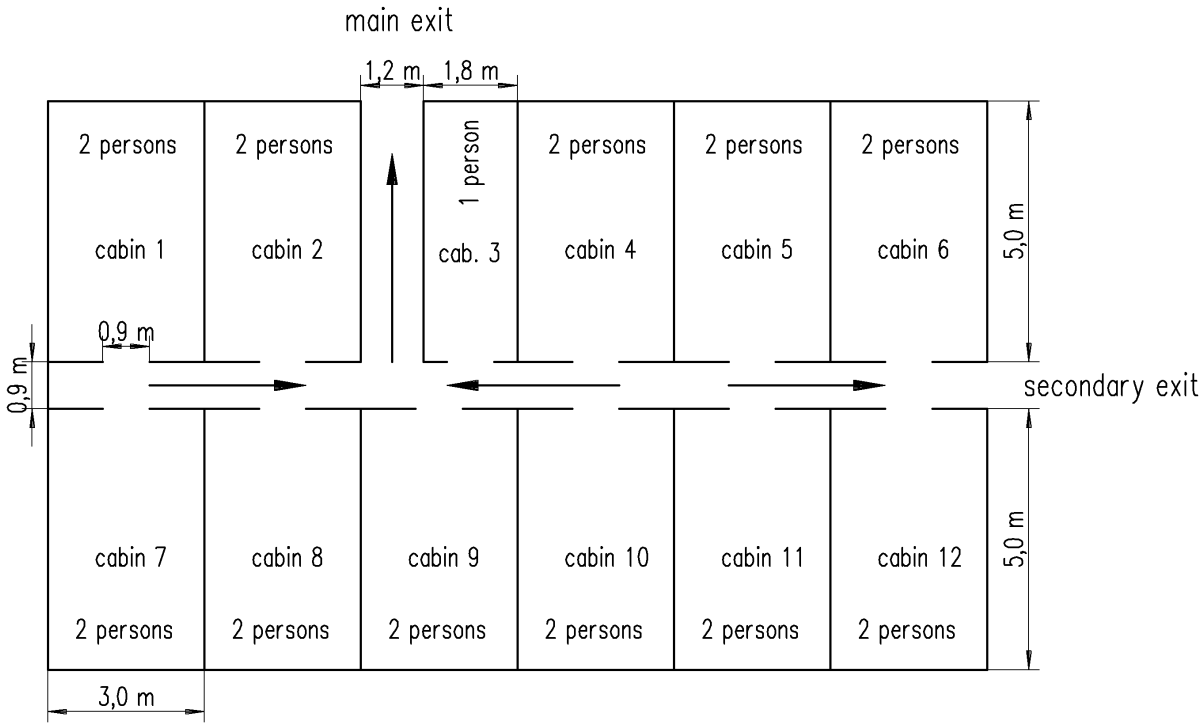

Figure 4: Cabin area

Test 11: Staircase

Construct a room connected to a stair via a corridor as shown in figure 4 populated as indicated with a panel consisting of males 30-50 years old from table 3.4 in the appendix to the Interim Guidelines for the advanced evacuation analysis of new and existing ships with instant response time and distribute the walking speeds over a population of 150 people. The expected result is that congestion appears at the exit from the room, which produces a steady flow in the corridor with the formation of congestion at the base of the stairs.

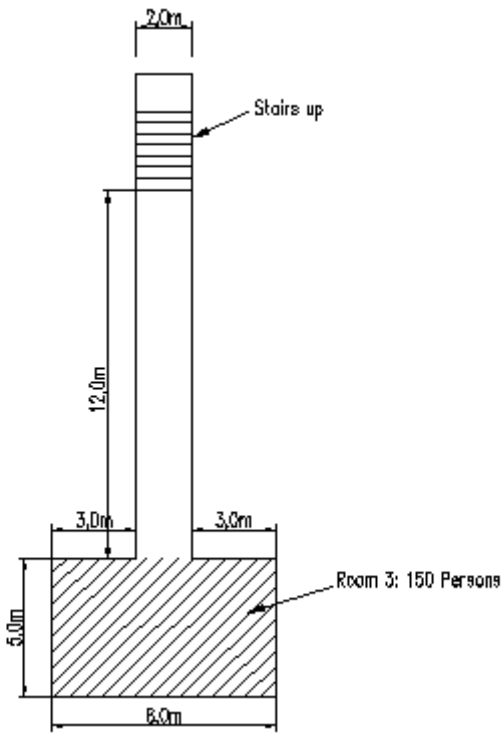

Figure 5: Escape route via stairs

Quantitative verification

Quantitative verification involves comparing model predictions with reliable data generated from evacuation demonstrations. At this stage of development there is insufficient reliable experimental data to allow a thorough quantitative verification of egress models. Until such data becomes available the first three components of the verification process are considered sufficient.

***

ANNEX 3

DRAFT MSC CIRCULAR

GUIDELINES FOR SMOKE CONTROL AND VENTILATION SYSTEMS FOR INTERNAL ASSEMBLY STATIONS AND ATRIUMS ON NEW PASSENGER SHIPS

1 The Maritime Safety Committee, at its [seventy-fifth session (15 to 24 May 2002)], taking into account the hazards to life posed by smoke generated during a fire and its effect on the safe and orderly evacuation of a passenger ship, approved the Guidelines for smoke control and ventilation systems for internal assembly stations and atriums on new passenger ships, as set out in the annex.

2 Member Governments are invited to bring the annexed Guidelines to the attention of passenger ship designers, owners, operators, shipbuilders and other parties concerned.

3 Member Governments are also invited to submit to the Sub-Committee on Fire Protection information on experienced gained in the implementation of the Guidelines.

ANNEX

GUIDELINES FOR SMOKE CONTROL AND VENTILATION SYSTEMS FOR INTERNAL ASSEMBLY STATIONS AND ATRIUMS ON NEW PASSENGER SHIPS

1 Purpose

1.1 The purpose of the smoke control and ventilation systems depends on the type of space being considered.

1.2 For internal assembly stations, the smoke control and ventilation systems should be capable of preventing the entry of smoke from surrounding spaces in order to permit the assembling of passengers.

1.3 For atriums, the smoke control and ventilation systems should be capable, in the spaces served by such systems, of maintaining visibility in order to assist in safe escape and to allow fire-fighters to operate.

2 Basic requirements

2.1 The volumes of enclosed spaces such as lockers, pantries, shops, offices and restaurants, which are contained within the boundaries of atriums should be taken into consideration when determining the capacity of the ventilation system serving an atrium.

2.2 Considering the different purposes of the aforementioned systems in relation to the spaces served, as addressed in section 1, the use of atriums as internal assembly stations should not be permitted.

2.3 Each internal assembly station and atrium should be served by a separate ventilation system that is independent of systems serving other spaces.

2.4 Ducts should be arranged so that the performance criteria addressed in sections 3 and 4 can be met at any point of the served space, including any enclosed space as described in paragraph 2.1.

2.5 The application of these guidelines does not stipulate the installation of additional fans other than those normally dedicated to the space considered, if such fans are of sufficient size to meet the required capacity.

2.6 The emergency stop control for ventilation systems for each internal assembly station and atrium should be independent from any other emergency stop controls. The emergency stop control for the ventilation system should also have priority over any other automatic or manual controls for the activation or re-activation of the ventilation. After resetting the emergency stop signal, the manual and automatic (if provided) control of the ventilation system should be available again.

3 Atriums

3.1 The extraction system should have a minimum capacity as required by SOLAS regulation II-2/8.5*.

3.2 The system should be capable of maintaining a negative pressure within the atriums with respect to the pressure that may be found under normal operating conditions in the surrounding spaces.

3.3 The system should be capable of manual and automatic operation. The control panel should be located in the central control station.

3.4 The automatic activation of the system, by means of the smoke detectors, may be delayed for up to 2 minutes from the activation of the first detector, if not acknowledged. This 2 minute delay is intended to allow for crew verification of the smoke detector alarm.

4 Internal assembly stations

4.1 The smoke control and ventilation systems should be capable of maintaining positive pressure within the space served with respect to the pressure that may be found under normal operating conditions in the surrounding spaces.

4.2 The system should be manually operated only. The control panel should be located in the central control station.

5 Installation tests

5.1 After installation, the smoke control and ventilation systems should be tested to verify that their performance meets the criteria set out in these guidelines.

5.2 Except for the personnel directly involved, other personnel should be prohibited from entering the spaces under consideration for the duration of the tests.

5.3 Atriums

5.3.1 Two separate tests should be carried out as described below.

5.3.2 The first test should verify that the smoke control and ventilation systems are capable of starting automatically upon activation of the smoke detection system. The following should be taken into account:

.1 it should be ensured that the fans and related dampers are placed in automatic operation;

.2 a smoke detector in the space should be activated;

.3 it should be verified that the fans start automatically;

.4 it should be verified that the dampers are in the correct position; and

.5 it should be verified that those doors, which are automatically operated by the detection system, are closed.

* Refers to the revised SOLAS chapter II-2 adopted by resolution MSC.99(73).

5.3.3 The second test should verify that the space is sufficiently free of smoke in 10 min or less. The following should be taken into account:

.1 it should be ensured that the fans are placed in manual operation;

.2 it should be ensured that the doors, which are automatically operated by the detection system, are closed manually;

.3 the space should be filled with smoke using smoke generating machines or equivalent;

.4 it should be verified that the smoke has been spread at all levels of the space and that the visibility is reduced to approximately 1 m;

.5 it should be demonstrated that within 10 min of the starting of the smoke control system the entire space is sufficiently free of smoke so that on each level, an exit sign adjacent to an exit door can be observed from a position or positions approximately equidistant from all exit doors; and

.6 it should be demonstrated that the system is capable of maintaining a negative pressure in relation to the surrounding spaces. It should be verified that the negative pressure does not impair the operation of escape doors.

5.4 Internal assembly stations

5.4.1 The test to be performed for internal assembly stations should take into account the following:

.1 it should be ensured that the fans are placed in manual operation;

.2 main entrance doors should be kept open;

.3 the ventilation system of the surrounding spaces should be operated under normal conditions;

.4 smoke generating machines or equivalent should be located outside the space, close to the main entrance doors; and

.5 it should be demonstrated that the system is capable of preventing smoke from entering the space and maintaining a positive pressure in relation to the surrounding spaces. It should be verified that the positive pressure does not impair the operation of escape doors.

6 Instructions on use and maintenance

6.1 Installation plans, operating manuals and maintenance instructions should be readily available on board.

***

ANNEX 4

DRAFT MSC CIRCULAR

GUIDELINES FOR THE USE AND INSTALLATION OF DETECTORS EQUIVALENT TO SMOKE DETECTORS

1 The Maritime Safety Committee, at its [seventy-fifth session (15 to 24 May 2002)], approved Guidelines for the use and installation of detectors equivalent to smoke detectors, as required by SOLAS regulation II-2/7, set out in the annex.

2 Member Governments are invited to apply the annexed Guidelines when approving detectors equivalent to smoke detectors.

ANNEX

GUIDELINES FOR THE USE AND INSTALLATION OF DETECTORS EQUIVALENT TO SMOKE DETECTORS

General

1 Detectors fitted as equivalent to smoke detectors required by SOLAS regulation II-2/7[1] should have a reliability and sensitivity performance at least comparable to smoke detectors required by SOLAS.

2 The detector, system and its components should be designed, installed and tested[2] in accordance with the same standards used for smoke detectors which are in keeping with the Organization's requirements[3].

Principal requirements

3 The requirements of chapter 9 of the Fire Safety Systems (FSS) Code[1], except as modified by these guidelines, should apply.

4 Where carbon monoxide detectors are used, the alarm threshold should be set at 40 ppm with the ability of the detector to be adjusted to high and low sensitivity settings in order to obtain the optimum performance after considering the fire hazard and the likely source and to minimise false alarms.

***

[1] Refer to SOLAS regulation II-2/13 for ships constructed before 1 July 2002.

[2] e.g. EN54, part 7, test fires

[3] Reference is made to the testing standard to be developed by the Organization.

ANNEX 5

DRAFT MSC CIRCULAR

UNIFIED INTERPRETATIONS OF THE INTERNATIONAL CODE FOR APPLICATION OF FIRE TEST PROCEDURES (FTP CODE) AND FIRE TEST PROCEDURES REFERRED TO IN THE CODE

1 The Maritime Safety Committee, [at its seventy-fifth session (15 May to 24 May 2002)], with a view to ensuring uniform application of the fire test provisions of the FTP Code containing vague wording which is open to diverging interpretations, approved unified interpretations prepared by the Sub-Committee on Fire Protection at its forty-sixth session, as set out in the annex.

2 Member Governments are invited to use the annexed unified interpretations as guidance, when applying relevant provisions of the FTP Code for the testing of new materials, tested on or after [the date of approval of the circular], in order to fulfil the requirements of the 1974 SOLAS Convention, as amended, and to bring the unified interpretations to the attention of all parties concerned.

3 Member Governments are also advised to take into account earlier unified interpretations to the FTP Code and fire test procedures referred to in the Code, as given in circulars MSC/Circ.964 and MSC/Circ.1004.

ANNEX

UNIFIED INTERPRETATIONS OF THE FTP CODE AND FIRE TEST PROCEDURES REFERRED TO IN THE CODE

International Code for Application of Fire Test Procedures

5 Approval

Paragraph 5.2.4

Type approval certificates for windows should state which side of the window was exposed to the heating condition during the test.

The certificate should include a reference to optional test(s) such as hose stream test and/or thermo radiation test.

Resolution A.754(18), Appendix A.I - Windows

Paragraph 2.1

The test should be conducted on a window of the maximum size (in terms of both the height and the width) and the type of the glass pane and/or the minimum thickness of the glass pane or panes and gaps, if appropriate, for which approval is sought. Test results obtained on this configuration should, by analogy, allow approval of windows of the same type, with lesser dimensions in terms of height and width and with the same or greater thickness.

Resolution A.653(16)

Paragraph 10

The sentence should be understood to mean: "Materials giving average values for all of the surface flammability criteria as listed in the following table…(etc)".

***

ANNEX 6

CORRECTION OF ERRORS IN THE REVISED SOLAS CHAPTER II-2

Regulation 4 – Probability of ignition

1 In paragraph 2.2.4, delete the word "cargo" between "ro-ro" and "spaces".

Regulations 9 – Containment of fire

2 In the second sentence of paragraph 2.2.4.2.2 (10), add the words "To be considered in this category," before the words "Enclosed promenades…"

3 In paragraph 4.1.1.5, add the word "of" after "provisions".

4 In paragraph 4.1.3.3.2, replace "5 *l*/m^2" by "5 *l*/min per square metre".

***

ANNEX 7

DRAFT MSC CIRCULAR

UNIFIED INTERPRETATIONS OF THE REVISED SOLAS CHAPTER II-2

1 The Maritime Safety Committee, [at its seventy-fifth session (15 to 24 May 2002)], with a view to ensuring uniform application of the fire protection, fire detection and fire extinction provisions of the 1974 SOLAS Convention, as amended by resolution MSC.99(73), containing vague wording which is open to diverging interpretations, approved unified interpretations as set out in the annex.

2 Member Governments are invited to use the annexed unified interpretations as guidance when applying relevant provisions of the revised SOLAS chapter II-2 and to bring them to the attention of all parties concerned.

ANNEX

UNIFIED INTERPRETATIONS OF THE REVISED SOLAS CHAPTER II-2

Regulation 4 – Probability of Ignition

4.2.2.3.4

Controls for remote operation of the valve for emergency generator fuel tank

The wording "separate location" does not mean separate spaces.

4.2.4

Arrangements for other flammable oils

The second sentence of regulation 4.2.4 is not applicable to hydraulic valves and cylinders located on weather decks, in tanks, cofferdams or void spaces.

4.5.1.1

Separation of cargo oil tanks

Pump-rooms intended solely for ballast transfer need not comply with the requirements of regulation 4.5.10. The requirements of regulation 4.5.10 are only applicable to the pump-rooms where pumps for cargo, such as cargo pumps, stripping pumps, pumps for slop tanks, pumps for COW or similar pumps are provided.

4.5.10.1.2

Emergency lighting

Where the lighting in cargo pump-rooms can be commonly used as the emergency lighting, this lighting should be interlocked with the ventilation systems. However, this interlock should not prevent operation of the emergency lighting in case of the loss of the main source of electrical power.

4.5.10.1

Bilge level monitoring devices

Bilge high level alarms are acceptable as an alternative means for the level monitoring devices.

Regulation 9 – Containment of fire

9.4.1.1.2

Fire testing of watertight doors

Watertight doors constructed in accordance with SOLAS regulation II-1/15 and fitted below the bulkhead deck that are required to be watertight need not be tested to the Fire Test Procedures Code provided that the doors meet requirements for water tightness in regulation 18 of SOLAS chapter II-1.

Regulation 10 – Fire fighting

10.4.3

Storage rooms for fire extinguishing medium

The following requirements in the regulation are applicable only to the storage rooms for fire-extinguishing media of fixed gas fire-extinguishing systems:

.1 the storage room should be used for no other purposes (aft part of first sentence);

.2 if the storage space is located below deck, it should be located no more than one deck below the open deck and should be directly accessible by a stairway or ladder from the open deck (3rd sentence);

.3 spaces which are located below deck or spaces where access from the open deck is not provided, should be fitted with a mechanical ventilation system designed to take exhaust air from the bottom of the space and should be sized to provide at least 6 air changes per hour (4th sentence); and

.4 access doors should open outwards, and bulkheads and decks including doors and other means of closing any opening therein, which form the boundaries between such rooms and adjacent enclosed spaces should be gas tight (5th sentence).

Regulation 13 – Means of escape

13.3.2.3

Direct access to stairway enclosures

Direct access to escape stairway enclosures is only intended for those areas of an accommodation space as defined in regulation 3.39 for public spaces. Portions of an accommodation space that serve a purpose different than that of a public space such as theatre backstage areas, should not have direct access to escape stairway enclosures.

13.3.4

Emergency escape breathing devices

The number of EEBD(s) to be kept within accommodation spaces should, as a minimum, be:

.1 For cargo ships: 2 EEBDs and 1 spare EEBD;

.2 For passenger ships carrying not more than 36 passengers: 2 EEBDs for each main vertical zone except those defined in the regulation 13.3.4.5, and a total of 2 spare EEBDs; and

.3 For passenger ships carrying more than 36 passengers: 4 EEBDs for each main vertical zone except those defined in the regulation 13.3.4.5, and a total of 2 spare EEBDs.

***

ANNEX 8

DRAFT MSC CIRCULAR

PREPARATION OF SHIPBOARD FIRE CONTROL PLANS

1 The Maritime Safety Committee at its [seventy-fifth session (15 to 24 May 2002)] noted that SOLAS regulation II-2/15 (which will enter into force on 1 July 2002) requires that fire control plans be permanently exhibited for the guidance of the ship's officers and that a duplicate set of fire control plans or a booklet containing such plans be permanently stored in an enclosure outside the deckhouse for the assistance of shoreside fire-fighting personnel.

2 The Committee further noted that resolution A.654(16) on Graphical symbols for fire control plans, recognizing that the use of universally understood symbols should greatly increase the usefulness of fire control plans, both for the crew of the ship and for shorebased fire brigades, urged Member Governments to bring the symbols annexed to that resolution to the attention of ships' personnel and shorebased fire-fighting personnel with a view to encouraging their adoption for use on board all ships.

3 The Committee, having noted that ISO, in close co-operation with IMO, had developed its standard ISO 17631:2002 – Ships and marine technology – Shipboard plans for fire protection, life-saving appliances and means of escape, providing fire protection symbols which generally conform to the corresponding symbols set out in the Annex to resolution A.654(16), decided that the ISO standard 17631 should be brought to the attention of Member Governments.

4 It is the intention of the Committee to prepare a revision of resolution A.654(16), which either will make reference to, or incorporate the graphical symbols contained therein, the abovementioned ISO standard, without any changes, for adoption by the Assembly at its twenty-third session in 2003.

5 Member Governments are invited to bring standard ISO 17631:2002 to the attention of shipbuilders, ship owners, ship operators, ship masters, shorebased fire-fighting personnel and other parties concerned with the preparation or use of shipboard fire control plans, so that they may use it, on a voluntary basis, for the preparation or use of shipboard fire control plans in compliance with SOLAS regulation II-2/15, pending the adoption of the revised Assembly resolution.

6 Member Governments are also invited to note that existing ships may still use resolution A.654(16) in the fire control plan on board.

***

ANNEX 9

DRAFT ASSEMBLY RESOLUTION

IMPROVED GUIDELINES FOR MARINE PORTABLE FIRE EXTINGUISHERS

THE ASSEMBLY,

RECALLING Article 15(j) of the Convention on the International Maritime Organization concerning the functions of the Assembly in relation to regulations and guidelines concerning maritime safety,

RECALLING ALSO that it adopted, by resolution A.602(15), the Revised Guidelines for marine portable fire extinguishers, to supplement the relevant requirements of chapter II-2 of the International Convention for the Safety of Life at Sea (SOLAS), 1974, as amended, as well as chapter V of the Torremolinos International Convention for the Safety of Fishing Vessels, 1977,

RECOGNIZING the need to further improve the Revised Guidelines for marine portable fire extinguishers in view of adoption of amendments to chapter II-2 of the 1974 SOLAS Convention and of the 1993 Torremolinos Protocol and in the light of experience gained with the application of the Revised Guidelines,

HAVING CONSIDERED the recommendation made by the Maritime Safety Committee at its [seventy-fifth] session,

1. ADOPTS the Improved Guidelines for marine portable fire extinguishers, the text of which is set out in the Annex to the present resolution;

2. RECOMMENDS Governments concerned to apply the Improved Guidelines set out in the Annex, in conjunction with the appropriate requirements of the above instruments;

3. AUTHORIZES the Maritime Safety Committee to keep the Improved Guidelines under review and amend or extend them as necessary;

4. RESOLVES to supersede resolution A.602(15).

ANNEX

IMPROVED GUIDELINES FOR MARINE PORTABLE FIRE EXTINGUISHERS

1 SCOPE

These Guidelines have been developed to supplement the relevant requirements for marine portable fire extinguishers* of the International Convention for the Safety of Life at Sea 74, as amended, the International Code for fire safety systems (FSS Code) and the 1993 Torremolinos Protocol relating to the Torremolinos International Convention for the Safety of Fishing Vessels, 1977. The Guidelines are offered to Administrations to assist them in determining appropriate design and construction parameters. The status of the Guidelines is advisory. Their content is based on current practices and does not exclude the use of designs and materials other than those indicated below.

2 DEFINITIONS

2.1 An *extinguisher* is an appliance containing an extinguishing medium, which can be expelled by the action of internal pressure and be directed into a fire. This pressure may be stored pressure or be obtained by release of gas from a cartridge.

2.2 A *portable extinguisher* is one, which is designed to be carried and operated by hand, and which in working order has a total weight of not more that 23 kg.

2.3 *Extinguishing medium* is the substance contained in the extinguisher the action of which causes extinction of fire.

2.4 *Charge of an extinguisher* is the mass or volume of the extinguishing medium contained in the extinguisher. The quantity of the charge of water or foam extinguishers is normally expressed in volume (litres) and that of other types of extinguishers in mass (kilograms).

3 CLASSIFICATION

3.1 Extinguishers are classified according to the type of extinguishing medium they contain. At present the types of extinguishers and the uses for which they are recommended are as follows:

Extinguishing medium	**Recommended for use on fires involving**
Water Water with additives	wood, paper, textiles and similar materials
Foam	wood, paper, textiles and flammable liquids
Dry powder/dry Chemical (standard/ classes B, C)	flammable liquids, electrical equipment and flammable gases
Dry powder/dry chemical (multiple or general purpose/ classes A, B, C)	wood, paper, textiles, flammable liquids, electrical equipment and flammable gases
Dry powder/dry chemical (metal)	combustible metals
Carbon dioxide	flammable liquids, electrical equipment
Wet chemical for class F or K	cooking grease, fats or oil fires
Clean agents**	

* Wherever in the text of these Guidelines the word *"portable extinguisher"* appears it *should* be taken as meaning "marine portable fire extinguisher".

** Refer to the recommendations by the International Organization for Standardization, in particular Publication ISO 7165:1999, *Fire-fighting – Portable fire extinguishers – Performance and construction*.

3.2 A table is provided in the appendix, which describes the general characteristics of each type of extinguisher.

4 CONSTRUCTION

4.1 The construction of an extinguisher should be designed and manufactured for simple and rapid operation, and ease of handling.

4.2 Extinguishers should be manufactured to a recognized national or international standard*, which includes a requirement that the body, and all other parts subject to internal pressure, be tested:

.1 to a pressure of 5.5 MPa or 2.7 times the normal working pressure, whichever is the higher, for extinguishers with a service pressure not exceeding 2.5 MPa; or

.2 in accordance with the recognized standard for extinguishers with a service pressure exceeding 2.5 MPa.

4.3 In the design of components, selection of materials and determination of maximum filling ratios and densities, consideration should be given to the temperature extremes to which extinguishers may be exposed on board ships and operating temperature ranges specified in the recognized standards.

4.3 The materials of construction of exposed parts and adjoining dissimilar metals should be carefully selected to function properly in the marine environment.

5 FIRE CLASSIFICATIONS

Fire classifications are generally A, B, C, D and F (or K). There are currently two standards, defining classes of fires according to the nature of the material undergoing combustion, as follows:

International Organization for Standardization (ISO standard 3941)*	**National Fire Protection Association (NPFA 10)**
Class A: Fires involving solid materials, usually of an organic nature, in which combustion normally takes place with the formation of glowing embers.	**Class A:** Fires in ordinary combustible materials such as wood, cloth, paper, rubber and many plastics
Class B: Fires involving liquids or liquefiable solids	**Class B:** Fires in flammable liquids, oils, greases, tars, oil base paints, lacquers and flammable gases.
Class C: Fires involving gases.	**Class C:** Fires, which involve energized electrical equipment where the electrical non-conductivity of the extinguishing medium is of importance. (When electrical equipment is de-energized, extinguishers for class A or B fires may be used safely.)
Class D: Fires involving metals	**Class D:** Fires in combustible metals such as magnesium, titanium, zirconium, sodium, lithium, and potassium
Class F: Fires involving cooking oil	**Class K**: Fires involving cooking grease, fats and oils

Table 3.1

***Comite Europeen de Normalisation (CEN standard EN2) closely follows ISO standard 3941.**

* Refer to the recommendations by the International Organization for Standardization, in particular Publication ISO 7165:1999, *Fire-fighting – Portable fire extinguishers – Performance and construction*.

6 TEST SPECIFICATIONS

6.1 Construction, performance and fire-extinguishing test specifications should be to the satisfaction of the Administration, having due regard to an established international standard*

7 CRITERIA FOR ASSESSING COMPLIANCE WITH CHAPTER 4 OF THE FSS CODE AND REGULATIONS V/20 AND V/38 OF THE 1993 TORREMOLINOS PROTOCOL RELATING TO THE 1977 TORREMOLINOS CONVENTION

7.1 Chapter 4 of the FSS Code requires that extinguishers have a fire-extinguishing capability at least equivalent to that of a 9 litre fluid extinguisher having a rating of 2A on class A fire which may be water or foam as required by the Administration. This equivalence may be demonstrated by fire test ratings determined according to an international, national or other recognized standard.

7.2 The size and type of extinguishers should be dependent upon the potential fire hazards in the protected spaces while avoiding a multiplicity of types. Care should also be taken to ensure that the quantity of extinguishing medium released in small spaces does not endanger personnel.

8 MARKING OF EXTINGUISHERS

Each extinguisher should be clearly marked with the following minimum information:

.1 name of the manufacturer;

.2 types of fire and rating for which the extinguisher is suitable;

.3 type and quantity of extinguishing medium;

.4 approval details;

.5 instructions for use and recharge (it is recommended that operating instructions be given in pictorial form, in addition to explanatory text in language understood by the likely user);

.6 year of manufacture;

.7 temperature range over which the extinguisher will operate satisfactorily; and

.8 test pressure.

9 PERIODICAL INSPECTIONS AND MAINTENANCE

9.1 Extinguishers should be subject to periodical inspections in accordance with the manufacturer's instructions and serviced at intervals not exceeding one year.

---

* Refer to the recommendations by the International Organization for Standardization, in particular Publication ISO 7165:1999, *Fire-fighting – Portable fire extinguishers – Performance and construction*.

9.1.1 At least one extinguisher of each type manufactured in the same year and kept on board a ship should be test discharged at five yearly intervals (as part of a fire drill).

9.1.2 All extinguishers together with propellant cartridges should be hydraulically tested in accordance with the recognized standard or the manufacturer's instruction at intervals not exceeding ten years.

9.1.3 Service and inspection should only be undertaken by, or under the supervision of, a person with demonstrable competence, based on the inspection guide at Table 9.

9.2 Records of inspections should be maintained. The records should show the date of inspection, the type of maintenance carried out, and whether or not a pressure test was performed.

9.3 Extinguishers should be provided with a visual indication of discharge.

9.4 Instructions for recharging extinguishers should be supplied by the manufacturer and be available for use on board.

ANNUAL INSPECTION	
Safety clip and indicating devices	Check to see if the extinguisher may have been operated
Pressure indicating device	Where fitted check to see that the pressure is within limits. Check that dust covers on pressure indicating devices and relief valves are in place
External examination	Inspect for corrosion, dents or damage which may affect the safe operation of the extinguisher
Weight	Weigh the extinguisher and check the mass compared to the fully charged extinguisher.
Hose and Nozzle	Check that hoses and nozzles are clear and are undamaged
Operating instructions	Check that they are in place and legible
INSPECTION AT RECHARGE	
Water and foam charges	Remove the charge to a clean container if to be reused and check if it is still suitable for further use. Check any charge container.
Powder charges	Examine the powder for reuse. Ensure that it is free flowing and that there is no evidence of caking lumps or foreign bodies.
Gas Cartridge	Examine for damage and corrosion.
INSPECTION AT FIVE AND TEN YEAR INTERVALS	
INSPECTION AFTER DISCHARGE TEST	
Air passages and Operating mechanism	Prove clear passage by blowing through vent holes and vent devices in the cap. Check hose, nozzle strainer, discharge tube and breather valve, as applicable. Check the operating and discharge control. Clean and lubricate as required.
Operating mechanism	Check that the safety pin is removable, and that the lever is undamaged.
Gas Cartridge	Examine for damage and corrosion. Weigh the cartridge to ascertain that it is within prescribed limits.
O-rings washers and hose diaphragms	Check O-rings and replace hose diaphragms if fitted.
Water and foam bodies	Inspect the interior. Check for corrosion and lining deterioration. Check separate containers for leakage or damage.
Powder body	Examine the body and check internally for corrosion and lining deterioration.
INSPECTION AFTER RECHARGE	
Water and foam	Replace the charge in accordance with the manufacturers instructions.
Reassemble	Reassemble the extinguisher in accordance with the manufacturers instructions.
Maintenance label	Fill in entry on maintenance label, including full weight
Mounting of extinguishers	Check the mounting bracket or stand.
Report	Complete a report on the state of maintenance of the extinguisher.

Table 9 – Inspection Guide

APPENDIX

Extinguishing medium used:	TYPES OF EXTINGUISHER							
	Water				**Foam**	**Powder**	**Carbon dioxide**	**Clean agents**
	Water, with possible salts in solution				Water solution containing foam generating substances	Dry chemical Powders	Pressurized carbon dioxide	
Expellant charge of the extinguisher (stored pressure or cartridge as indicated)		Carbon dioxide or other pressurized inert gases or compressed air (stored pressure or separate cartridge)			Carbon dioxide or other pressurized inert gases or compressed air (stored pressure or separate cartridge)	Carbon dioxide or other inert gases or dry air (stored pressure or separate cartridge)		
The discharge of the extinguisher is achieved by		Opening of the valve. Action of pressurized gas (opening of the cartridge)			Opening of the valve. Action of pressurized gas (opening of the cartridge)	Opening of the valve. Action of pressurized gas (opening of the cartridge)	Opening of the valve of the container constituting the extinguisher	

	Types of Extinguisher							
	Water				**Foam**	**Powder**	**Carbon dioxide**	**Clean agents**
The discharged extinguishing medium consists of	Water with possible salts in solution				Foam containing the gas used	Dry chemical powders and carbon dioxide or other gas	Carbon dioxide	
The discharged extinguishing medium causes the extinction of the fire by:	Cooling of the burning materials. Water evaporation and consequent formation of a local atmosphere (water/steam) which isolates the burning products from the surrounding air			Formation of a foam layer which isolates the burning products from the surrounding air and cooling in the case of class A fires		Inhibition of the combustion process by the interrupting the chemical reaction. Some separation of burning materials from the surrounding air	Formation of a local inert atmosphere (carbon dioxide) which isolates the burning material from the surrounding air. Smothering and cooling action of carbon dioxide	
The electrical resistance of the discharged extinguishing medium is	Very low	Very low			Varied	Very high Under intense heat some powders may be electrically conductive	Very high	

<table>
<tr><td rowspan="3">Operating peculiarities and limitations</td><td colspan="6">Types of Extinguisher</td></tr>
<tr><td>Water</td><td></td><td>Foam</td><td>Powder</td><td>Carbon dioxide</td><td>Clean agents</td></tr>
<tr><td colspan="3">The jet or spray of the extinguisher is to be directed towards the base of the fire</td><td rowspan="2">Powder mixture subject to windage; they may therefore have reduced effectiveness in the open or in ventilated spaces</td><td rowspan="2">Gas; subject to windage; they therefore have limited effectiveness in the open or in ventilated spaces.</td><td rowspan="2"></td></tr>
<tr><td></td><td colspan="2">The extinction of the fire achieved only when all the burning surface is covered by foam</td></tr>
</table>

<table>
<tr><th rowspan="2"></th><th colspan="6">TYPES OF EXTINGUISHER</th></tr>
<tr><th colspan="3">Water</th><th>Foam</th><th>Powder</th><th>Carbon dioxide</th><th>Clean agents</th></tr>
<tr><td rowspan="2">Disadvantages and dangers</td><td colspan="4">Not to be used where there is electrical hazard</td><td rowspan="2">Generated powder mixtures may be suffocating. impair vision Powder can damage electrical contacts.</td><td rowspan="2">Carbon dioxide may be suffocating</td><td rowspan="2"></td></tr>
<tr><td colspan="3"></td><td></td></tr>
<tr><td rowspan="4">Maintenance</td><td colspan="6">Extinguishers with copper or copper alloy body should not be polished with products of corrosive or abrasive nature which may cause wall thickness reduction. Such extinguishers should be avoided but where used they should preferably be painted externally</td><td rowspan="3">Some types of powder may be altered by humidity; therefore, avoid the refilling of the extinguisher in humid locations</td><td rowspan="3"></td><td rowspan="4"></td></tr>
<tr><td colspan="3">The charge can freeze at temperatures of about 0^0C (unless the charge is made non-freezable chemically)</td><td colspan="3" rowspan="3">The charge can freeze at about – 5^0C. The charge can be altered by elevated temperatures (about 40^0C or more). Therefore, the extinguisher should not be installed in positions where it may be exposed to high or low temperatures.</td></tr>
<tr><td></td><td>Avoid installing the extinguisher in excessively warm locations, where the internal pressure of the carbon dioxide in the cartridge might rise to a very high value</td><td></td><td colspan="3">When a carbon dioxide container is provided, avoid the installation of the extinguisher in excessively warm locations, where the internal pressure of the carbon dioxide in the container might rise to very high values.</td></tr>
</table>

***

ANNEX 10

PROPOSED REVISED WORK PROGRAMME OF THE SUB-COMMITTEE AND PROVISIONAL AGENDA FOR FP 47

Proposed revised work programme of the Sub-Committee

		Target completion date/number of sessions needed for completion	Reference
1	**Analysis of fire casualty records**	Continuous	FSI 8/19, section 11; FP 46/16, section 7
	.1 **use of smoke helmet type breathing apparatus**	2003	FP 46/16, paragraph 13.1.4.1
	.2 **revision of the fire casualty record**	2003	FP 46/16, paragraph 13.1.4.2
~~H.1~~ L.2	Recommendation on evacuation analysis for new and existing passenger ships	~~2002~~ 2 sessions	MSC 73/21, paragraph 4.16; FP 46/16, section 3
~~H.2~~ H.1	**Unified interpretations of SOLAS chapter II-2, the FSS Code and related fire test procedures**	~~2002~~ 2004	FP 43/18, paragraphs 5.7, 7.25 and 15.3.5.1; FP 46/16, section 5
~~H.3~~ H.2	**Large passenger ship safety**	2003	MSC 74/24, paragraph 21.4; FP 46/16, section 11
~~H.4~~ H.3	**Revision of the fishing vessel Safety Code and Voluntary Guidelines** (co-ordinated by SLF)	2003	MSC 74/24, paragraph 21.5; FP 46/16, section 10
~~H.5~~ H.4	**Performance testing and approval standards for fire safety systems**	2005	MSC 74/24, paragraph 21.12; FP 46/16, section 12
L.1	**Revision of resolution A.654(16)**	2003	FP 41/22, section 12; FP 46/16, section 8

Notes: 1 "H" means a high priority item and "L" means a low priority item. However, within the high and low priority groups, items have not been listed in any order of priority.

2 The struck-out text indicates proposed deletions and the shaded text shows proposed additions or changes.

3 Items printed in bold letters have been selected for the provisional agenda for FP 47.

		Target completion date/number of sessions needed for completion	Reference
~~L.2~~	~~**Development of guidelines for ships operating in Arctic ice-covered waters** (co-ordinated by DE)~~	~~2002~~	~~MSC 71/23, paragraph 20.43; FP 45/16, section 9~~
L.3	Smoke control and ventilation	~~2002~~ 2 sessions	FP 39/19, section 9; FP 46/16, section 4
~~L.4~~	~~**Revision of resolution A.602(15)**~~	~~2002~~	~~MSC 72/23, paragraph 21.21.2; FP 45/16, section 12~~

Draft provisional agenda for FP 47*

Opening of the session

1 Adoption of the agenda

2 Decisions of other IMO bodies

3 Unified interpretations of SOLAS chapter II-2, the FSS Code and related fire test procedures

4 Analysis of fire casualty records**

.1 use of smoke helmet type breathing apparatus

.2 revision of the fire casualty record

5 Revision of resolution A.654(16)

6 Revision of the fishing vessel Safety Code and Voluntary Guidelines

7 Large passenger ship safety

8 Performance testing and approval standards for fire safety systems

9 Work programme and agenda for FP 48

10 Election of Chairman and Vice-Chairman for 2004

11 Any other business

12 Report to the Maritime Safety Committee

***

* Agenda item numbers do not necessarily indicate priority

** Item under continuous review

ANNEX 11

PROPOSED MODIFICATIONS TO THE DRAFT AMENDMENTS TO THE REVISED SOLAS CHAPTER II-2 PREPARED BY DSC 6

(See paragraph 4 of annex 9 to document DSC 6/15)

Regulation 19 – Carriage of dangerous goods

4 In vertical column 13 (concerning class 5.2) of table 19.3, add the following footnote after the "X" in rows 15 (concerning paragraph 3.10.1) and 16 (concerning paragraph 3.10.2):

> "[16] Under the provisions of the IMDG Code, as amended, storage of class 5.2 dangerous goods below deck or in closed ro-ro spaces is prohibited.".