INTERNATIONAL MARITIME ORGANIZATION

IMO

E

SUB-COMMITTEE ON DANGEROUS GOODS, SOLID CARGOES AND CONTAINERS
9th session
Agenda item 15

DSC 9/15/Add.1
18 October 2004
Original: ENGLISH

REPORT TO THE MARITIME SAFETY COMMITTEE

Summary of decisions

Attached is annex 3 to the report of the Sub-Committee on its ninth session (DSC 9/15).

***

For reasons of economy, this document is printed in a limited number. Delegates are kindly asked to bring their copies to meetings and not to request additional copies.

ANNEX 3

DRAFT RESOLUTION MSC…..(79)
(adopted on [ ] [December 2004])

CODE OF SAFE PRACTICE FOR SOLID BULK CARGOES, 2004

THE MARITIME SAFETY COMMITTEE,

RECALLING ARTICLE 28(b) of the Convention on the International Organization concerning the functions of the Committee,

RECALLING ALSO resolution A.434 (XI) by which the Assembly adopted the Code of Safe Practice for Solid Bulk Cargoes (BC Code),

NOTING that, the Assembly by the aforementioned resolution, authorized the Maritime Safety Committee (MSC) to adopt, where necessary, amendments to the Code which did not affect the principles on which the Code is based,

RECOGNIZING the desirability of reformatting and further revising the provisions of the Code in order to make it more user friendly and for easy retrieval of the different entries in case of amendments or additions,

HAVING CONSIDERED the revised BC Code prepared by the Sub-Committee on Dangerous Goods, Solid Cargoes and Containers, at its ninth session, to achieve this aim,

1. ADOPTS the Code of Safe Practice for Solid Bulk Cargoes, 2004, the text of which is set out in the Annex to the present resolution;

2. RECOMMENDS to Governments to apply the 2004 BC Code and to use it as a basis for national regulations in pursuance of their obligations under chapters VI and VII of the 1974 SOLAS Convention, as amended;

3. REQUESTS the Assembly to endorse the action taken by the Maritime Safety Committee.

ANNEX

DRAFT REVISED BC CODE

CONTENTS

		Page
Foreword		3
General Introduction		5
Section 1	Definitions	7
Section 2	General Precautions	10
Section 3	Safety of personnel and ship	13
Section 4	Assessment of acceptability of consignments for safe shipment	16
Section 5	Trimming Procedures	22
Section 6	Methods of determining angle of repose	24
Section 7	Cargoes which may liquefy	25
Section 8	Test procedures for cargoes which may liquefy	28
Section 9	Materials possessing chemical hazards	29
Section 10	Transport of solid wastes in bulk	38
Section 11	Stowage Factor conversion tables	41
Section 12	References to Related Information and Recommendations	42
Appendix 1	Individual Schedules of solid bulk cargoes	46
Appendix 2	Laboratory test procedures, associated apparatus and standards	330
Appendix 3	Properties of solid bulk cargoes	369
Appendix 4	Performance specification for the measurement of the density of solid bulk cargoes	370
Appendix 5	MSC/Circ.[…]	373
Appendix 6	Procedures for gas monitoring of coal cargoes	376
Appendix 7	Recommendations for entering enclosed spaces aboard ships	379
Appendix 8	Recommendations on the Safe use of pesticides in ships	391
Appendix 9	Index of solid bulk cargoes	417

FOREWORD

For more than 100 years cargoes have been shipped in bulk. However, in recent years there has been an increased variation in bulk cargoes carried by sea, which now constitute a significant proportion of international seaborne trade.

Millions of tonnes of cargoes such as coals, concentrates, grains, fertilizers, animal foodstuffs, minerals and ores - are shipped in bulk by sea every year. While the vast majority of these shipments are made without incident, there have been a number of serious casualties, which resulted, not only in the loss of ~~a~~ ship, but also in loss of life.

The problems involved in the carriage of bulk cargoes were recognized by the delegates to the 1960 International Conference on Safety of Life at Sea, but at that time, it was not possible to frame detailed requirements except for the carriage of grain cargoes. The Conference did recommend, however, in paragraph 55 of Annex D to the Convention, that an internationally acceptable code of safe practice for the shipment of bulk cargoes should be drawn up under the sponsorship of the International Maritime Organization (IMO). This work was undertaken by the Organization's Sub-Committee on Containers and Cargoes and several editions of the Code of Safe Practice for Solid Bulk Cargoes (BC Code) have been published, since the first one appeared in 1965.

Chapter VI of the International Convention for the Safety of Life at Sea 1974 governs the carriage of solid bulk cargoes, and was amended in 1994 to extend the scope of the chapter, to include bulk cargoes other than grain. The revised chapter entered into force in 1994 included provisions for regulating the carriage of solid bulk cargoes. Chapter VII of the Convention governs the carriage of dangerous goods and includes provisions relating to dangerous goods carried in bulk.

Detailed fire protection arrangements for ships carrying solid bulk cargoes are incorporated in chapter II-2 of the SOLAS Convention by regulations 10 and 19. Attention is drawn to regulation II-2/19.4 (or II-2/54.3) of SOLAS Convention as amended, which provides for a Document of Compliance to be issued to ships transporting bulk dangerous goods, as defined in regulation VII/1.1 of the Convention and in the IMDG Code, except class 6.2 and class 7, which are:

- cargo ships of 500 gross tonnage or over constructed, on or after 1 September 1984; or

- cargo ships of less than 500 gross tonnage constructed on or after 1 February 1992.

The BC Code itself provides guidance to Administrations, shipowners, shippers and masters on the standards to be applied in the safe stowage and shipment of solid bulk cargoes excluding grain, which is dealt with under separate rules. The BC Code includes practical guidance on the procedures to be followed and the appropriate precautions to be taken in the loading, trimming, carriage and discharge of bulk cargoes. The current edition includes all amendments to the BC Code that were adopted by the Maritime Safety Committee at its seventy-ninth session by resolution […].

The major changes that have been adopted are the following:

- Appendices A, B and C have been replaced by individual schedules for each cargo in Appendix 1. Cargoes that were listed in appendices A, B or C are now identified by Groups A, B or C in each schedule.

- Appendices D to G have been renumbered.

The BC Code contains recommendations for entering enclosed spaces aboard ships, which are contained in Appendix 7.

The list of solid bulk cargoes appearing in the BC Code is by no means exhaustive and the physical or chemical properties attributed to them are intended only for guidance. Therefore, before loading any solid bulk cargo it is essential to ascertain - usually from the shipper - the current physical characteristics and chemical properties of the cargo. In circumstances where, consultation with the competent authority is required prior to bulk shipment of cargoes, it is equally important to consult authorities at the ports of loading and discharge concerning requirements which may be in force.

Other information to assist persons responsible for the loading and unloading of solid bulk cargoes is contained in recommendations published by the Organization[1].

Since valuable information leading to improvements in this Code may be obtained from voyage reports, it is recommended that the master notifies his Administration of the behaviour of various types of solid bulk cargoes and, in particular, report any incidents involving such cargoes.

The BC Code is recommended to Governments for adoption or for use as the basis for national regulations in pursuance of their obligations under chapters VI and VII of the 1974 SOLAS Convention, as amended. Member States that adopt the Code as a basis for national regulations are invited to advise the Organization accordingly.

[1] Refer to the Code of Practice for the Safe Loading and Unloading of Bulk Carriers adopted by the Organization by resolution A.862(20).

GENERAL INTRODUCTION

1 The primary aim of this Code is to promote the safe stowage and shipment of solid bulk cargoes by:

.1 highlighting the dangers associated with the shipment of certain types of solid bulk cargoes;

.2 giving guidance on the procedures to be adopted when the shipment of solid bulk cargoes is contemplated;

.3 listing typical cargoes currently shipped in bulk together with advice on their properties, handling and carriage; and

.4 describing test procedures to be employed to determine various characteristics of the solid bulk cargoes.

2 Definitions of the terms used throughout this Code are given in section 1.

3 The hazards associated with the shipment of solid bulk cargoes may be considered as falling into the following categories:

.1 **Structural damage due to improper distribution of the cargo**

Advice on this subject will be found in section 2 and in the entries for individual cargoes.

.2 **Loss or reduction of stability during a voyage**

This usually results from:

.2.1 A shift of cargo in heavy weather due to the cargo having been inadequately trimmed or improperly distributed;

Advice on this subject will be found in sections 2, 5 and 6, the entries for individual cargoes and in section 2 of Appendix 2.

.2.2 Cargoes liquefying under the stimulus of vibration and motion of a ship in a seaway and then sliding or flowing to one side of the cargo hold. Such cargoes contain at least a proportion of finely grained material and moisture (usually water);

Advice on this subject will be found in sections 7 and 8 and in the entries for individual cargoes and Appendix 2.

.3 **Chemical reactions** e.g. emission of toxic or flammable gases, spontaneous combustion or severe corrosive effects.

Advice on these subjects can be found in sections 3 and 9, and in the entries for individual cargoes. Additional information can be found in sections 3, 4, 5 and 6 of Appendix 2 and in Appendix 3.

Lists of typical cargoes currently shipped in bulk, together with advice on their properties and methods of handling, are given in the entries for individual cargoes. However, these lists are not exhaustive and the properties attributed to the cargoes are given only for guidance. Consequently, before loading, it is essential to obtain current valid information from the shipper on the physical and chemical properties of the cargoes presented for shipment. The shipper should provide adequate information about the cargo to be shipped. Additional advice on this subject will be found in section 4 of the General Introduction.

5 The need for all personnel involved to exercise great care in preparation for and during loading or unloading solid bulk cargoes and in particular when entering spaces which may be deficient in oxygen, or which may contain toxic gases, is given special mention in section 3 and Appendix 7.

6 Details of test procedures, together with advice on methods of sampling to obtain representative samples for test purposes, are given in sections 4, 7 and 8 and in Appendix 2.

7 The laboratory test procedures described are used for determining the following:

.1 the moisture content, flow moisture point and transportable moisture limit of solid bulk cargoes which may liquefy;

.2 the angle of repose of granular materials;

.3 the self-sustaining exothermic decomposition of fertilizers containing nitrates (the trough test);

.4 resistance to detonation; and

.5 self-heating of charcoal.

8 Tests should be conducted only by suitably trained personnel. In the cases of 7.1 and 7.2 above, auxiliary check tests which may be employed by the ship's personnel are described. These tests should only be used in circumstances where the master doubts if the condition of the cargo is safe for shipment.

Note: If a cargo not listed in this Code is offered for bulk carriage, the master should consult the appropriate competent authority for further information.

Section 1

Definitions

1.1 Angle of repose - is the maximum slope angle of non-cohesive (i.e. free-flowing) granular material. It is the angle between a horizontal plane and the cone slope of such material.

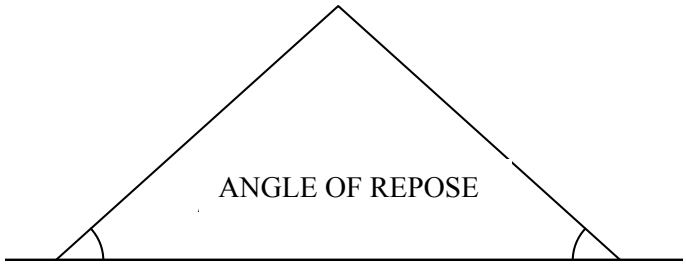

1.2 Bulk Cargo Shipping Name - identifies a bulk cargo during transport by sea. When the cargo is listed in this Code, the Bulk Cargo Shipping Name of the cargo is identified by capital letters in the individual entries or in the index. When the cargo is a dangerous good, as defined by SOLAS VII/2, the Proper Shipping Name is the Bulk Cargo Shipping Name.

1.3 Bulk Density - is the weight of solids, air and water per unit volume expressed in kilograms per cubic metre (kg/m^3). The voids in the cargo may be filled with air and water.

1.4 Cargoes which may liquefy - are cargoes which contain at least some fine particles and some moisture, usually water, although they need not be visibly wet in appearance. They may liquefy if shipped with a moisture content in excess of their transportable moisture limit.

1.5 Concentrates - are materials obtained from a natural ore by a process of enrichment or beneficiation by physical or chemical separation and removal of unwanted constituents.

1.6 Cargo space - is any space in the ship appropriated for the carriage of cargo.

1.7 Flow Moisture Point - is the percentage moisture content (wet mass basis) at which a flow state develops under the prescribed method of test in a representative sample of the material (see section 1 of Appendix 2).

1.8	Flow state	-	is a state that occurs when a mass of granular material is saturated with liquid to an extent that, under the influence of prevailing external forces such as vibration, impaction or ship's motion, it loses its internal shear strength and behaves as a liquid.
1.9	Group A[2]	-	consists of cargoes which may liquefy if shipped at a moisture content in excess of their transportable moisture limit.
1.10	Group B[3]	-	consists of cargoes which possess a chemical hazard which could give rise to a dangerous situation on a ship.
1.11	Group C[4]	-	consists of cargoes which are neither liable to liquefy (Group A) nor to possess chemical hazards (Group B).
1.12	Incompatible materials	-	are those materials that may react dangerously when mixed. They are subject to the segregation requirements of sub-subsection 9.3 and the entries for individual cargoes classified in Group B.
1.13	Materials Hazardous only in Bulk (MHB)	-	consists of materials which may possess chemical hazards when transported in bulk other than materials classified as dangerous goods in the International Maritime Dangerous Goods Code (IMDG Code).
1.14	Moisture content	-	is that portion of a representative sample consisting of water, ice or other liquid[5] expressed as a percentage of the total wet mass of that sample.
1.15	Moisture migration	-	is the movement of moisture contained in a cargo by settling and consolidation of the cargo due to vibration and ship's motion. Water is progressively displaced, which may result in some portions or all of the cargo developing a flow state.
1.16	Representative test sample	-	is a sample of sufficient quantity for the purpose of testing the physical and chemical properties of the consignment to meet specified requirements. It should be collected by means of an appropriate systematic sampling procedure (see sub-section 4.4).

[2] Corresponds to Appendix A in the BC Code (1998 Edition).
[3] Corresponds to Appendix B in the BC Code (1998 Edition).
[4] Corresponds to Appendix C in the BC Code (1998 Edition).
[5] Procedures given in this Code only apply to the usual cases wherein the moisture consists almost entirely of water or ice.

1.17	Shipper	-	for the purposes of this Code the term *"shipper"* means any person by whom or in whose name, or on whose behalf, a contract of carriage of goods by sea has been concluded with a carrier, or any person by whom or in whose name, or on whose behalf, the goods are actually delivered to the carrier in relation to the contract of carriage by sea.
1.18	Solid bulk cargo	-	is any cargo, other than liquid or gas, consisting of a combination of particles, granules or any larger pieces of material generally uniform in composition, which is loaded directly into the cargo spaces of a ship without any intermediate form of containment.
1.19	Stowage factor	-	is the figure which expresses the number of cubic metres which one tonne of cargo will occupy.
1.20	Transportable Moisture Limit	-	of a cargo which may liquefy represents the maximum moisture content of the cargo which is considered safe for carriage in ships not complying with the special provisions of sub-sections 7.3.2 and 7.3.3. It is derived from the Flow Moisture Point (flow table test, section 1 of Appendix 2) or from data obtained from other test methods approved by the appropriate authority of the Port State as being equally reliable.
1.21	Trimming	-	for the purposes of this Code, "trimming" means any leveling of the cargo within a cargo space, either partial or total.
1.22	Ventilation	-	Refer to sub-section 3.5.

Section 2

General precautions

2.1 Cargo distribution

2.1.1 General

2.1.1.1 A number of accidents have occurred as a result of improper loading and unloading of solid bulk cargoes. For further guidance, in addition to the provisions of this section, refer to the Code of Practice for the Safe Loading and Unloading of Bulk Carriers (BLU Code) published by the Organization[6]. It is very important to ensure that bulk cargoes are properly distributed throughout the ship so that the structure is never overstressed and the ship has an adequate standard of stability. To do this effectively, however, the master needs to be provided, by the shipper, with adequate information about the cargo, e.g. stowage factor, history of shifting, any particular problems, etc.

2.1.2 To prevent the structure being overstressed

2.1.2.1 When loading a high-density bulk cargo having a stowage factor of about 0.56 cubic metres per tonne or lower, the loaded conditions are different from those found normally and it is important to pay particular attention to the distribution of weights so as to avoid excessive stresses. A general cargo ship is normally constructed to carry cargoes of about 1.39 to 1.67 cubic metres per tonne when loaded to full bale and deadweight capacities. Because of the high density of some cargoes, it is possible, by improper distribution of loading, to stress either the structure under the load or the entire hull. To set out exact rules for the distribution of loading is not practicable for all ships because the structural arrangements of each vessel may vary greatly. Therefore, it is recommended that the master be provided with sufficiently comprehensive loading information to enable him to arrange the loading aboard his ship so as not to overstress the structure. Masters should be guided by the loading information provided in the ship's stability information booklet and by the results obtained by the use of loading calculators, if available.

2.1.2.2 When detailed information is not available for high-density bulk cargoes, then the following precautions are recommended:

.1 the general fore and aft distribution of cargoes by mass should not differ appreciably from that found satisfactory for general cargoes;

.2 the maximum number of tonnes of cargo loaded in any cargo space should not exceed:

$$0.9\ L \times B \times D \text{ tonnes}$$

[6] Refer to the Code of Practice for the Safe Loading and Unloading of Bulk Carriers adopted by the Organization by resolution A.862(20).

where

L = length of the hold in metres
B = average breadth of hold in metres
D = summer load draught in metres;

.3 where cargo is untrimmed or only partially trimmed the corresponding height of cargo pile peak in metres above the cargo space floor should not exceed:

1.1 x D x stowage factor

where the stowage factor is given in cubic metres per tonne;

.4 if the cargo is trimmed entirely level, the maximum number of tonnes of cargo loaded in any lower hold cargo space may be increased by 20% over the amount calculated by formula 0.9 L x B x D tonne subject, however, to full compliance with 2.1.2.2.1; and

.5 because of the stiffening effect of a shaft tunnel on the ship's bottom, lower hold cargo spaces abaft the machinery space may be loaded somewhat more deeply than provided for in sub-sections 2.1.2.2.2, 2.1.2.2.3 and 2.1.2.2.4, up to about 10% in excess, provided that such additional loading is consistent with 2.1.2.2.1.

2.1.3 **To aid stability**

2.1.3.1 Having regard to regulation II-1/22.1 of the International Convention for the Safety of Life at Sea (SOLAS), 1974, as amended, a stability information booklet should be provided aboard all ships which are subject to that Convention. Where solid bulk cargoes referred to in this Code, and requiring any of the loading and operational precautions specified, are to be carried, the information supplied to the master should include all necessary data. The master should be able to calculate the stability for the anticipated worst conditions during the voyage as well as that on departure and show that the stability is adequate.

2.1.3.2 In general, high-density cargoes should normally be loaded in the lower hold cargo spaces rather than in ’tween-deck cargo spaces.

2.1.3.3 When it is necessary to carry high-density cargoes in ’tween-decks or higher cargo spaces, care should be exercised to ensure that the deck area is not overstressed and that the ship's stability is not reduced below the minimum acceptable level as laid down in the ship's stability information booklet supplied to the master.

2.1.3.4 In transporting high-density cargoes, a particularly careful evaluation should be made of the consequences of sailing with an excessively high GM with consequential violent movement in a seaway.

2.1.3.5 Shifting divisions and bins, of adequate strength, should be erected whenever solid bulk cargo which are suspected of readily shifting are carried in ’tween-deck cargo spaces or in only partially filled cargo spaces.

2.2 Loading and unloading

2.2.1 Before loading, the cargo spaces should be inspected and prepared for the particular cargo which is to be loaded. Guidance on bulk carrier inspections is contained in recommendations published by the Organisation[7].

2.2.2 The master should ensure that bilge lines, sounding pipes and other service lines within the cargo space are in good order. Because of the velocity at which some high-density bulk cargoes are loaded, special care is necessary to protect cargo space fittings from damage. For this reason it is also prudent to sound bilges after the completion of loading.

2.2.3 Attention is particularly drawn to bilge wells and strainer plate, which should be specially prepared to facilitate drainage and to prevent entry of the cargoes into the bilge system.

The master is advised that precautions should be taken to minimize the extent to which dust may come into contact with the moving parts of deck machinery and external navigational aids.

2.2.4 Wherever possible, ventilation systems should be shut down or screened and air conditioning systems, if any, placed on recirculation during loading or discharge, in order to minimize the entry of dust into the living quarters or other interior spaces of the ship.

[7] Refer to the "Guidance to Ships' Crews and Terminal Personnel for Bulk Carrier Inspections" adopted by the organizations by resolution A.866 (20).

Section 3

Safety of personnel and ship

3.1 General requirements

3.1.1 Prior to and during loading, transport and discharge of solid bulk cargoes all necessary safety precautions, including any appropriate national regulations or requirements, should be observed.

3.1.2 Advice on medical matters is given in the IMO/WHO/ILO Medical First Aid Guide for Use in Accidents Involving Dangerous Goods (MFAG). A copy of the MFAG should be on board each ship.

3.2 Poisoning, corrosive and asphyxiation hazards

3.2.1 Certain solid bulk cargoes are susceptible to oxidation, which in turn may result in oxygen reduction, emission of toxic fumes and self-heating. Some cargoes may not oxidize but may emit toxic fumes, particularly when wet. There are also cargoes which, when wetted, are corrosive to skin, eyes and mucous membranes or to the ship's structure. In these cases, particular attention should be paid to protection of personnel and the need for special precautions and measures to be taken prior to loading and after unloading.

3.2.2 Therefore, it is important, that the shipper informs the master prior to loading as to whether chemical hazards exist. The master should also refer to the individual entry for the cargo involved and the necessary precautions, especially those pertaining to ventilation.

3.2.3 Shipmasters are warned that cargo spaces and adjacent spaces may be depleted in oxygen or may contain toxic or asphyxiating gases. An empty cargo space or tank which has remained closed for some time may have insufficient oxygen to support life.

3.2.4 Many cargoes frequently carried in bulk are liable to cause oxygen depletion in a cargo space or tank; these include most vegetable products, grains, timber logs and forest products, ferrous metals, metal sulphide concentrates and coal cargoes.

3.2.5 Entry of personnel into enclosed spaces should not be permitted until tests have been carried out and it has been established that the oxygen content has been restored to a normal level throughout the space and that no toxic gas is present, unless adequate ventilation and air circulation throughout the free space above the cargo has been effected. It should be remembered that, after a cargo space or tank has been tested and generally found to be safe for entry, small areas may exist where oxygen is deficient or toxic fumes are still present.

General precautions and procedures for entering enclosed spaces appear in Appendix 3. As much publicity as possible should be given to the hazards associated with entry into enclosed spaces. A poster on the subject should be produced. A specimen (reduced format) for such a poster for display on board ships in accommodation or other places, as appropriate, has been included in Appendix 7[8].

[8] Refer also to resolution A.864(20), Recommendations for entering enclosed spaces aboard ships.

3.2.6 When transporting a bulk cargo which is liable to emit a toxic or flammable gas, or cause oxygen depletion in the cargo space, an appropriate instrument for measuring the concentration of gas or oxygen in the cargo space should be provided.

3.2.7 It should be noted that a flammable gas detector is suitable only for testing the explosive nature of gas mixtures.

3.2.8 Emergency entry into a cargo space should be undertaken only by trained personnel wearing self-contained breathing apparatus, protective clothing and always under the supervision of a responsible officer.

3.3 **Health hazards due to dust**

3.3.1 To minimize the chronic and acute risks due to exposure the dust of certain cargoes carried in bulk, the need for a high standard of personal hygiene of those exposed to the dust cannot be too strongly emphasized. The precautions should include, not only the use of appropriate protective clothing and barrier creams, when needed but also adequate personal washing and laundering of outer clothing. Whilst these precautions are good standard practice, they are particularly relevant for those cargoes identified as toxic by this Code.

3.4 **Flammable atmosphere**

3.4.1 Dust created by certain cargoes may constitute an explosion hazard, especially while loading, unloading and cleaning. This risk can be minimized at such times by ensuring that ventilation is sufficient to prevent the formation of a dust-laden atmosphere and by hosing down rather than sweeping.

3.4.2 Some cargoes may emit flammable gases in sufficient quantities to constitute a fire or explosion hazard. Where this is indicated in the individual entries, the cargo spaces and adjacent enclosed spaces should be effectively ventilated at all times (see also 9.3.2.1.3 for requirements for mechanical ventilation). Also it may be necessary to monitor the atmosphere in such spaces by means of combustible gas indicators.

3.5 **Ventilation**

3.5.1 Where cargoes are carried which may emit toxic or flammable gases the cargo spaces should be provided with effective ventilation.

3.5.1.1 For the purpose of this Code, ventilation means exchange of air from outside to inside the cargo space to reduce any build-up of flammable gases or vapours to a safe level below the Lower Explosive Limit (LEL), or for toxic gases, vapours or dust to a level to maintain a safe atmosphere in a cargo space.

3.5.1.2 For ventilation requirements, the following definitions should be applied:

.1 natural ventilation means ventilation that is not power generated. An airflow is supplied by air ducts and/or other adequately designed openings;

.2 surface ventilation means ventilation only of the space above the cargo;

.3 mechanical ventilation means power generated ventilation; and

.4 continuous ventilation means ventilation that is operating at all times.

3.5.2 **Recommendations on ventilation**

.1 when continuous ventilation is required by the entry for the cargo in this Code or by the cargo information provided by the shipper, ventilation should be maintained while the cargo is in the hold; unless a situation develops where ventilation would endanger the ship;

.2 if maintaining ventilation endangers the ship or the cargo, it may be interrupted unless there is risk of explosion or other danger due to interruption of the ventilation;

.3 Holds intended for the carriage of cargoes for which continuous ventilation is required, should be provided with ventilation openings which may be kept opened when required. Such openings should comply with the requirements of the Load Line Convention as amended for openings not fitted with means of closure; and

.4 Ventilation should be such that any escaping hazardous gases, vapours or dust cannot reach living quarters. Escaping hazardous gases[9], vapours or dust should not be able to reach work areas unless adequate precautions are taken (refer to Appendix 7).

3.6 **Cargo under in-transit fumigation**

3.6.1 Fumigation should be performed in accordance with the Recommendations on the Safe Use of Pesticides in Ships, set out in Appendix 8 of this Code.

[9] Refer to "Tanker Safety Guide (LIQUEFIED GAS) and the INTERNATIONAL SAFETY GUIDE FOR OIL TANKERS AND TERMINALS (ISGOTT)" by the International Chamber of Shipping (ICS)".

Section 4

Assessment of acceptability of consignments for safe shipment

4.1 Identification

4.1.1 Cargoes in this Code have been assigned a Bulk Cargo Shipping Name (BCSN). Some have additionally been assigned a United Nations number. When a bulk cargo is carried by sea it should be identified in the transport documentation by the Bulk Cargo Shipping Name. This should be supplemented by the United Nations (UN) number when it is stated in the relevant individual entry.

4.1.2 Correct identification of a bulk cargo facilitates identification of the conditions necessary to safely carry the cargo and determines the emergency procedures necessary to deal with an incident involving some cargoes.

4.2 Provision of information

4.2.1 The shipper should provide the master or his representative with appropriate information on the cargo sufficiently in advance of loading to enable the precautions which may be necessary for proper stowage and safe carriage of the cargo to be put into effect.

4.2.2 Such information should be confirmed in writing and by appropriate shipping documents prior to loading the cargo on the ship. The cargo information should include:

- the Bulk Cargo Shipping Name when the cargo is listed in this Code. Secondary names can be used in addition to the Bulk Cargo Shipping Name;
- the IMO Class for dangerous cargoes in Group B, except MHB;
- the UN number preceded by letters UN for dangerous cargoes in Group B;
- the total quantity of the cargo offered;
- information on the stowage factor;
- the trimming procedures;
- the likelihood of shifting, including angle of repose, if applicable;
- additional information in the form of a certificate on the moisture content of the cargo and its transportable moisture limit in the case of a concentrate or other cargo which may liquefy;

- drainage to form a wet base;

- any other relevant safety information, such as:

  - chemical properties in the case of a solid bulk cargo not classified in accordance with the provisions of the IMDG Code, but which has chemical properties that may create a potential hazard;

  - toxic or flammable gases which may be generated by cargo;

  - flammability, toxicity, corrosiveness and propensity to oxygen depletion of the cargo;

  - self-heating properties of the cargo, and the need for trimming if appropriate, etc.

- If waste cargoes are being transported for disposal, or for processing for disposal, the name of the cargoes should be preceded by word <WASTE>.

In addition, other elements of information deemed necessary by national authorities may also be shown.

4.2.3 Information provided by the shipper should be accompanied by a declaration[10]. Further guidance on this cargo declaration is found in the Code of Practice for the Safe Loading and Unloading of Bulk Cargoes (BLU Code) published by the Organization[11].

4.3 **Certificates of test**

4.3.1 To get the information in 4.2.2, the shipper should arrange for the cargo to be properly sampled and tested. Furthermore, the shipper should provide the ship's master or his representative, at the loading port, with the appropriate certificates of test, as applicable.

4.3.2 Certificates stating the transportable moisture limits should contain, or be accompanied by, a statement by the shipper that the moisture content specified in the certificate of moisture content is, to the best of his knowledge and belief, the average moisture content of the cargo at the time the certificate is presented to the master. When cargo is to be loaded into more than one cargo space of a ship, the certificate of moisture content should certify the moisture content of each type of finely grained material loaded into each cargo space. However, if sampling according to the procedures recommended in this Code indicates that the moisture content is uniform throughout the consignment, then one certificate of average moisture content for all cargo spaces should be acceptable.

---

[10] Refer to the MSC/Circ.633 – Form for Cargo Information.

[11] Refer to the Code of Practice for the Safe Loading and Unloading of Bulk Carriers adopted by the Organization by resolution A.862(20).

4.3.3 Where certification is required by the entries for individual cargoes possessing chemical hazards, the certificate should contain or be accompanied by a statement from the shipper that the chemical characteristics of the cargo are, to the best of his knowledge, those existing at the time of the ship's loading.

4.4 **Sampling procedures**

4.4.1 Physical property tests on the consignment will be meaningless unless they are conducted prior to loading on truly representative test samples.

4.4.2 Sampling should be conducted only by persons who have been suitably trained in sampling procedures and who are under the supervision of someone who is fully aware of the properties of the consignment and also the applicable principles and practices of sampling.

4.4.3 Prior to taking samples, and within the limits of practicability, a visual inspection of the consignment which is to form the ship's cargo should be carried out. Any substantial portions of material which appear to be contaminated or significantly different in characteristics or moisture content from the bulk of the consignment should be sampled and analyzed separately.

Depending upon the results obtained in these tests, it may be necessary to reject those particular portions as unfit for shipment.

4.4.4 Representative samples should be obtained by employing techniques which take the following factors into account:

.1 the type of material;

.2 the particle size distribution;

.3 composition of the material and its variability;

.4 the manner in which the material is stored, in stockpiles, rail wagons or other containers, and transferred or loaded by material-handling systems such as conveyors, loading chutes, crane grabs, etc.;

.5 the chemical hazards (toxicity, corrosivity, etc.);

.6 the characteristics which have to be determined: moisture content, flow moisture point, bulk density/stowage factor, angle of repose, etc.;

.7 variations in moisture distribution throughout the consignment which may occur due to weather conditions, natural drainage, e.g. to lower levels of stockpiles or containers, or other forms of moisture migration; and

.8 variations which may occur following freezing of the material.

4.4.5 Throughout the sampling procedures, utmost care should be taken to prevent changes in quality and characteristics. Samples should be immediately placed in suitable sealed containers which are properly marked.

4.4.6 Useful guidance on the method of sampling to be employed may be obtained from internationally or nationally recognized procedures such as those listed in 4.6.

4.5 Frequency of sampling and testing for Transportable Moisture Limit and Moisture Content determination

4.5.1 A test to determine the Transportable Moisture Limit of solid bulk cargoes which may liquefy should be conducted at regular intervals. Even in the case of materials of consistent composition, this test should be conducted at least once every six months. However, where the composition or characteristics are variable for any reason, more frequent testing is necessary. In such cases, testing once every three months and possibly more frequently is essential as such variations could have a significant effect on the value of the Transportable Moisture Limit. In certain cases it will be necessary to test every shipment.

4.5.2 Sampling and testing for Moisture Content should be conducted as near as possible to the time of loading. In any event the time interval between sampling/testing and loading should never be more than seven days unless the consignment is adequately protected to ensure that no change occurs in its moisture content. Furthermore, whenever there has been significant rain or snow between the time of testing and loading, check tests should be conducted to ensure that the cargo is still in a safe state to load.

4.5.3 Samples of frozen cargo should be tested for the Transportable Moisture Limit when the free moisture is completely thawed.

4.6 Sampling procedures for concentrate stockpiles

4.6.1 It is not practicable at the present time to specify a single method of sampling for all consignments since the character of the material and the form in which it is available will affect the selection of the procedure to be used. Where national or international sampling standards cannot be applied, the following sampling procedures for concentrate stockpiles are recommended as a minimum for determining Transportable Moisture Limit and moisture content. These procedures are not intended to replace sampling procedures, such as the use of automatic sampling, that achieve equal or superior accuracy of either Transportable Moisture Limit or moisture content.

4.6.2 Sub-samples should be taken in a reasonably uniform pattern, if at all possible from a leveled stockpile. A plan of the stockpile should be drawn and divided into areas, each of which contains approximately 125 t, 250 t or 500 t depending on the amount of concentrate to be shipped. Such a plan will indicate to the sampler the number of sub-samples required and from where each is to be taken. Each sub-sample taken should be drawn from approximately 50 cm below the surface of the designated area.

4.6.3 The number of sub-samples and sample size required should be given by the competent authority or determined in accordance with the following scale:

Consignments of less than 15,000 t:

One 200 g sub-sample should be taken for each 125 t to be shipped.

Consignments of more than 15,000 but less than 60,000 t:

One 200 g sub-sample should be taken for each 250 t to be shipped.

Consignments in excess of 60,000 t:

One 200 g sub-sample should be taken for each 500 t to be shipped.

4.6.4 Sub-samples for moisture content determination should be placed in sealed containers (such as plastic bags, cans, or small metallic drums) immediately on withdrawal for conveyance to the testing laboratory, where they should be thoroughly mixed in order to obtain a fully representative sample. Where testing facilities are not available at the testing site, such mixing should be done under controlled conditions at the stockpile and the representative sample placed in a sealed container and shipped to the test laboratory.

4.6.5 Basic procedural steps include:

.1 identification of consignment to be sampled;

.2 determination of the number of individual sub-samples and representative samples, as described in 4.4.3 and 4.6.3, which are required;

.3 determination of the positions from which to obtain sub-samples and the method of combining such sub-samples to arrive at a representative sample;

.4 gathering of individual sub-samples and placing them in sealed containers;

.5 thorough mixing of sub-samples to obtain the representative sample; and

.6 placing the representative sample in a sealed container if it has to be shipped to a test laboratory.

4.7 **Standardized sampling procedures**

ISO 3082: 1998 - Iron ores - Sampling and sample preparation procedures

ISO 1988: 1975 - Hard coal - Sampling

ASTMD2234-99 - Standard Practice for Collection of a Gross Sample of Coal

Australian Standards

AS 4264.1	-	Coal and Coke-Sampling
	-	Part 1: Higher rank coal - Sampling Procedures
AS 1141 – Series	-	Methods of sampling and testing aggregates
BS.1017:1989	-	Methods of sampling coal and coke
BS 1017	-	British Standard Part 1: 1989 methods of sampling of coal
BS 1017	-	British Standard Part 2: 1994 methods of sampling of coal

Canadian Standard Sampling Procedure for Concentrate Stockpiles
European Communities Method of Sampling for the Control of Fertilizers

JIS M 8100	-	Japanese General Rules for Methods of Sampling Bulk Materials
JIS M 8100: 1992	-	Particulate cargoes- General Rules for Methods of Sampling

Polish Standard Sampling Procedure for:

Iron and Manganese Ores - Ref. No. PN-67/H-04000

Nonferrous Metals - Ref. No. PN-70/H-04900
Russian Federation Standard Sampling Procedure for the Determination of Moisture Content in Ore Concentrates.

4.8 **Documentation required on board the ship carrying cargoes of group B, except MHB**

4.8.1 Each ship carrying cargoes of Group B, except MHB, should have a special list or manifest setting forth, in accordance with SOLAS regulation VII/5, the dangerous cargoes and their location.

4.8.2 For consignments of cargoes of Group B, except MHB, appropriate information for use in emergency response to accidents and incidents in the case of dangerous cargoes.

4.8.3 Cargo ships of 500 gross tonnage or over constructed on or after 1 September 1984 and cargo ships of less than 500 gross tonnage constructed on or after 1 February 1992 and subject to regulation II-2/19.4 (or II-2/54.3) of the SOLAS Convention as amended should have a Document of Compliance when transporting bulk dangerous goods as defined in the IMDG Code, except class 6.2 and class 7.

Section 5

Trimming procedures

5.1 General precautions

5.1.1 Trimming a cargo reduces the likelihood of the cargo shifting and minimizes the air entering the cargo, which could lead to spontaneous heating. To minimize these risks, cargoes should be trimmed reasonably level.

5.1.2 Cargo spaces should be filled as full as practicable without resulting in excessive loading on the bottom structure or 'tween-deck. Cargo should be spread as widely as possible to the boundary of the cargo space.

5.1.3 Where the master is in any doubt, from the information provided to him, the cargo should be trimmed effectively level by the most effective means, e.g., loading spouts or chutes, portable machinery, equipment or manual labour.

5.2 Specific precautions

5.2.1 Ships of 100 m in length or less

The importance of trimming as an effective means of reducing the possibility of a shift of a material can never be overstressed and it is particularly important in ships of 100 m in length or less.

5.2.2 Multi-deck ships

5.2.2.1 When a cargo is loaded only in lower cargo spaces, it should be trimmed sufficiently to equalize the mass distribution on the bottom structure.

5.2.2.2 When bulk cargoes are carried in 'tween-decks, the hatchways of such 'tween-decks should be closed in those cases where the loading information indicates an unacceptable level of stress of the bottom structure if the hatchways are left open. The cargo should be trimmed reasonably level and should either extend from side to side or be secured by additional longitudinal divisions of sufficient strength. The safe load-carrying capacity of the 'tween-decks should be observed to ensure that the deck structure is not overloaded[12].

5.2.2.3 If coal cargoes are carried in 'tween decks, the hatches should be tightly sealed to prevent air from the hold moving up through the body of the coal in the 'tween deck.

5.2.3 Cohesive bulk cargoes

5.2.3.1 All damp cargoes and some dry ones possess cohesion. For cohesive cargoes, the general precautions in sub-section 5.1 apply.

---

[12] Refer also to SOLAS 1974, as amended, chapter VI, regulation 7.5.

5.2.3.2 The angle of repose is not a reliable indicator of the stability of a cohesive bulk cargo. Hence it has not been included in the individual entries for cohesive cargoes.

5.2.4 Non-cohesive bulk cargoes

5.2.4.1 For trimming purposes, solid bulk cargoes can be categorized as cohesive or non-cohesive as denoted in Appendix 3. The angle of repose is a characteristic of non-cohesive bulk cargoes which is indicative of cargo stability and has been included in the individual entries for non-cohesive cargoes. Prior to completion of loading, the angle of repose of the cargoes to be loaded should establish which provisions of this section apply. Methods for determining the angle of repose are given in section 6.

5.2.4.2 Non-cohesive bulk cargoes having an angle of repose less than or equal to 30º.

These cargoes, which flow freely like grain, should be carried according to the provisions applicable to the stowage of grain cargoes[13]. However, account should be taken of the density of the cargo when determining:

.1 the scantlings and securing arrangements of divisions and bin bulkheads; and

.2 the stability effect of free cargo surfaces.

5.2.4.3 Non-cohesive bulk cargoes having an angle of repose from 30° to 35° inclusive.

Such cargoes should be trimmed according to the following criteria:

.1 the unevenness of the cargo surface measured as the vertical distance (Δh) between the highest and lowest levels of the cargo surface should not exceed B/10, where B is the beam of the ship in metres, with a maximum allowable $\Delta h = 1.5$ m;

.2 where Δh cannot be measured, bulk shipment can also be accepted if loading is carried out with trimming equipment approved by the competent authority.

5.2.4.4 Non-cohesive bulk cargoes having an angle of repose greater than 35°

A cargo having an angle of repose greater than 35° should be loaded with care, the aim being to distribute the cargo in a manner which eliminates the formation of wide, steeply sloped voids beyond the trimmed surface within the boundaries of the cargo space. The cargo should be trimmed to an angle significantly less than the angle of repose.

[13] Reference is made to chapter VI of the International Convention for the Safety of Life at Sea, (SOLAS) 1974, as amended, and the mandatory International Code for the Safe Carriage of Grain in Bulk.

Section 6

Methods of determining the angle of repose

6.1 There are various methods in use to determine the angle of repose for non-cohesive bulk materials. Two common methods are listed below for information.

.1 Tilting box method. This laboratory test method is suitable for non-cohesive granular materials having a grain size not greater than 10 mm. It is not appropriate for cohesive (all damp and some dry materials). A full description of the equipment and procedure is given in sub-section 2.1 of Appendix 2.

.2 Shipboard test method. In the absence of a tilting box apparatus, an alternative procedure for determining the approximate angle of repose is given in sub-section 2.2 of Appendix 2.

Section 7

Cargoes which may liquefy

7.1 The purpose of this section is to bring to the attention of Masters and others with responsibilities for the loading and carriage of bulk cargoes, the risks associated with cargo shift and the precautions to minimise the risk. Such cargoes may appear to be in a relatively dry granular state when loaded, and yet may contain sufficient moisture to become fluid under the stimulus of compaction and the vibration which occurs during a voyage.

7.2 **Cargo Shift**

7.2.1 A ship's motion may cause a cargo to shift sufficiently to capsize the vessel. Cargo shift can be divided into two types, namely, sliding failure or liquefaction consequence. Trimming the cargo in accordance with Section 5 can prevent sliding failure.

7.2.2 Group A cargoes in this Code may liquefy during a voyage, even if the cargo is cohesive and trimmed level. Liquefaction can result in cargo shift and may be described as follows:

.1 the volume of the spaces between the particles reduces as the cargo is compacted due to the ships motion;

.2 this reduction of the spaces between the particles causes an increase in water pressure;

.3 the increase in water pressure reduces the friction between particles causing a reduction in the shear strength of the cargo.

7.2.3 Liquefaction does not occur when one of the following conditions is satisfied:

.1 when the cargo contains very small particles, the movement of the particles is restricted by cohesion and water pressure does not increase;

.2 when the cargo consists of large particles or lumps, water passes through the spaces between the particles with no increase in water pressure. Cargoes, which consist entirely of large particles, will not liquefy;

.3 when a cargo contains a high percentage of air and low moisture content, any increase in water pressure is inhibited. Dry cargoes will not liquefy.

7.2.4 Cargoes, which contain a certain proportion of small particles and a certain amount of moisture, may liquefy.

7.2.5 A cargo shift caused by liquefaction may occur when the moisture content exceeds the Transportable Moisture Limit (TML). Certain cargoes are susceptible to moisture migration, which may develop a dangerous wet base even if the average moisture content is less than the TML.

Although the surface of the cargo may appear dry, undetected liquefaction may take place resulting in shifting of the cargo. It is extremely important to mariners who carry these cargoes that they are provided with accurate TML and moisture content values of the cargo. Such cargoes should be trimmed reasonably level and loaded as deeply as practicable. The base of cargoes with a high moisture content are prone to slide particularly when the cargo is shallow and subject to large heel angles.

7.2.6 In the resulting viscous fluid state, cargo may flow to one side of the ship with a roll one way but not completely return with a roll the other way. Thus, the ship may progressively reach a dangerous heel and capsize quite suddenly.

7.2.7 Group A cargoes should be trimmed reasonably level on completion of loading irrespective of the stated angle of repose. This will minimize the potential for shifting and reduce oxidation of the cargo.

7.3 **Precautions**

7.3.1 General

7.3.1.1 Ships other than specially constructed or fitted ships (see 7.3.2 and 7.3.3) should carry only those cargoes having a moisture content not in excess of the Transportable Moisture Limit (TML) as defined in this Code. Certain types of cargoes, which liquefy, may also heat spontaneously.

7.3.1.2 Cargoes, which contain liquids, other than packaged canned goods or the like, should not be stowed in the same cargo space above or adjacent to a consignment of these cargoes.

7.3.1.3 Adequate precautions to prevent liquids entering the cargo space in which these materials are stowed should be maintained during the voyage. Such precautions are of paramount importance in the case of some of these materials where contact with seawater could lead to serious problems of corrosion to either the hull or machinery.

7.3.1.4 Masters are cautioned about the possible danger of using water to cool a shipment of these cargoes while the ship is at sea. Introducing water may well bring the moisture content of these cargoes to a flow state. When necessary water is most effectively applied in the form of a spray.

7.3.2 Specially fitted cargo ships

7.3.2.1 Cargoes having a moisture content in excess of the Transportable Moisture Limit may be carried in cargo ships which are fitted with specially designed portable divisions to confine any shift of cargo to an acceptable limit.

7.3.2.2 The design and positioning of such special arrangements should adequately provide not only the restraint of the immense forces generated by the flow movement of high-density bulk cargoes, but also for the need to reduce to an acceptable safe level the potential heeling movements arising out of a transverse cargo flow across the cargo space. Divisions provided to meet these requirements should not be constructed of wood.

7.3.2.3 It may also be necessary for elements of the ship's structure, bounding the, cargo, to be strengthened.

7.3.2.4 The plan of special arrangements and details of the stability conditions on which the design has been based should have been approved by the Administration of the country where the ship is registered. In such cases the ship concerned should carry evidence of approval by its Administration.

7.3.3 Specially constructed cargo ships

7.3.3.1 Cargoes having a moisture content in excess of the Transportable Moisture Limit may be carried in specially constructed cargo ships which have permanent structural boundaries, so arranged as to confine any shift of cargo to an acceptable limit. The ship concerned should carry evidence of approval by its Administration.

7.3.4 Submission of data

7.3.4.1 A submission made to an Administration for approval of such a ship under 7.3.2 or 7.3.3 should include:

.1 scaled longitudinal and transverse sections, drawings and relevant structural drawings;

.2 stability calculations, taking into account loading arrangements and possible shift of the cargo, showing the distribution of cargo and liquids in tanks, and of cargo which may become fluid; and

.3 any other information which may assist in the assessment of the submission.

Section 8

Test procedures for cargoes which may liquefy

8.1 The recommended test procedures given in Appendix 2 provide for the laboratory determination of:

.1 the moisture content of representative samples of the material to be loaded; and

.2 the flow moisture point and the Transportable Moisture Limit of the material.

8.2 If the circumstances are such that a laboratory test cannot be made of the material about to be loaded and a suitable drying oven and a weighing scale are available on board ship, an auxiliary check test of the moisture content of the material may be carried out according to the procedures specified in paragraph 1.1.4.4 of Appendix 2. Other methods for direct measurement of moisture content approved by the appropriate authority for specific materials may be used for this purpose. Where the moisture content is above or near the Transportable Moisture Limit, the material should not be accepted until proper laboratory tests have been completed.

8.3 If the master has doubts in regard to the appearance or condition of the material a check test for approximately determining the possibility of flow may be carried out on board ship or at the dockside by the following auxiliary method:

> Half fill a cylindrical can or similar container (0.5 to 1*l* capacity) with a sample of the material. Take the can in one hand and bring it down sharply to strike a hard surface such as a solid table from a height of about 0.2 m. Repeat the procedure 25 times at one or two second intervals. Examine the surface for free moisture or fluid conditions. If free moisture or a fluid condition appears, arrangements should be made to have additional laboratory tests conducted on the material before it is accepted for loading.

8.4 Other methods, which have been approved by the competent authorities as being equally reliable, may be used.

Section 9

Materials possessing chemical hazards

9.1 General

9.1.1 Solid materials transported in bulk, which can present a hazard during transport because of their chemical nature, or properties are in Group B. Some of these materials are classified as dangerous goods in the International Maritime Dangerous Goods Code (IMDG Code), others are materials which may cause hazards when transported in bulk.

9.1.2 It is important to note that the list of materials included in Group B is not exhaustive. Therefore, it is essential to obtain current, valid information about the physical and chemical properties of the cargoes to be shipped in bulk, prior to loading. When cargoes other than those in Group B are carried, which fall within the classification of 9.2.2, the ship concerned should carry evidence of the approval of the competent authority for their transport.

9.1.3 Where consultation with the competent authority is required prior to bulk shipment of a material it is equally important to consult authorities at the ports of loading and discharge concerning requirements which may be in force.

9.2 Classes of hazard

9.2.1 The classification of materials possessing chemical hazards and intended to be shipped in bulk under the requirements of this Code should be in accordance with 9.2.2 and 9.2.3.

9.2.2 Classification

Chapter VII of the International Convention for the Safety of Life at Sea, (SOLAS) 1974, as amended, sets out the various classes of dangerous goods. For the purpose of this Code it has been found more convenient to designate these classes in accordance with the IMDG Code and to define in greater detail the materials which would fall within each class. Additionally, Materials Hazardous only in Bulk (MHB) are defined in this section and in section 1.

9.2.2.1 Class 4.1: Flammable solids.

These materials possess the properties of being easily ignited by external sources such as sparks and flames and of being readily combustible or of being liable to cause or contribute to fire through friction.

9.2.2.2 Class 4.2: Substances liable to spontaneous combustion.

These materials possess the common property of being liable to heat spontaneously and to ignite.

9.2.2.3 Class 4.3: Substances which, in contact with water, emit flammable gases.

These materials possess the common property, when in contact with water, of evolving flammable gases. In some cases these gases are liable to spontaneous ignition.

9.2.2.4 Class 5.1: Oxidizing substances (agents).

These materials, although in themselves not necessarily combustible, may, either by yielding oxygen or by similar processes, increase the risk and intensity of fire in other materials with which they come into contact.

9.2.2.5 Class 6.1: Toxic substances.

These materials are liable either to cause death or serious injury or to harm human health if swallowed or inhaled, or by skin contact.

9.2.2.6 Class 6.2: Infectious substances.

These materials contain viable micro-organisms or their toxins which are known or suspected to cause disease in animals or humans.

9.2.2.7 Class 7: Radioactive materials.

These materials spontaneously emit a significant radiation. Their specific activity is greater than 70kBq/kg (0.002uCi/g).

9.2.2.8 Class 8: Corrosives.

These materials possess in their original state the common property of being able more or less severely to damage living tissue.

9.2.2.9 Class 9: Miscellaneous dangerous substances and articles.

These materials present a hazard not covered by other classes.

9.2.3 Materials Hazardous only in Bulk (MHB)

These materials, when carried in bulk, present sufficient hazards to require specific precautions. For example, materials, which are liable to reduce the oxygen content in a cargo space, and those materials liable to self-heating or which become hazardous when wet, are regarded as belonging in this group (see also 3.2.3, 3.2.4 and 3.2.5).

9.3 **Stowage and segregation requirements**

9.3.1 General requirements

9.3.1.1 The potential hazards of the cargoes listed in Group B and falling within the classification of 9.2.2 and 9.2.3 entail the need for segregation of incompatible cargoes. Segregation shall also take account of any identified subsidiary risk.

9.3.1.2 In addition to general segregation as between whole classes of materials there may be a need to segregate a particular material from others which would contribute to its hazard. In the case of segregation from combustible materials this should be understood not to include packaging material, ceiling or dunnage; the latter should in these circumstances be kept to a minimum.

9.3.1.3 For the purpose of segregating incompatible materials, the words "hold" and "compartment" are deemed to mean a cargo space enclosed by steel bulkheads or shell plating and by steel decks. The boundaries of such a space should be resistant to fire and liquid.

9.3.1.4 When two or more different incompatible materials are to be transported in bulk, the segregation between them should be at least equivalent to that described under "separated from" (see 9.3.4).

9.3.1.5 Where different grades of a cargo are transported in bulk in the same cargo space, the most stringent segregation provisions applicable to any of the different grades should apply to all of them.

9.3.1.6 When materials in bulk and dangerous goods in packaged form are to be transported, the segregation between them should be at least equivalent to that described in 9.3.3.

9.3.1.7 Incompatible materials should not be handled simultaneously. In particular, contamination of foodstuffs should be avoided.

Upon completion of loading one such cargo, the hatch covers of every cargo space should be closed and the decks cleaned of residue before the loading of other materials is commenced. When discharging, the same procedures should be followed.

9.3.1.8 To avoid contamination, a material which is indicated as toxic should be stowed "separated from" all foodstuffs (see 9.3.4).

9.3.1.9 Materials which may evolve toxic gases in sufficient quantities to affect health should not be stowed in those spaces from where such gases may penetrate into living quarters, work areas, or ventilation systems.

9.3.1.10 Materials which present corrosive hazards of such intensity as to affect either human tissue or the ship’s structure should only be loaded after adequate precautions and protective measures have been taken.

9.3.1.11 After discharge of a toxic material, the spaces used for its transport should be inspected for contamination. A space which has been contaminated should be properly cleaned and examined before being used for other cargoes, especially foodstuffs.

9.3.1.12 After discharge of cargoes, a close inspection should be made for any residue which should be removed before the ship is presented for other cargoes. Such an inspection is particularly important when materials with corrosive properties have been transported.

9.3.1.13 For cargoes for which in case of an emergency the hatches should be opened, these hatches should be kept free to be capable of being opened up.

9.3.2 Special requirements

9.3.2.1 Materials of classes 4.1, 4.2 and 4.3

9.3.2.1.1 Materials of these classes should be kept as cool and dry as reasonably practicable and should be stowed clear of all sources of heat or ignition.

9.3.2.1.2 Electrical fittings and cables should be in good condition and properly safeguarded against short circuits and sparking. Where a bulkhead is required to be suitable for segregation purposes, cable and conduit penetrations of the decks and bulkheads should be sealed against the passage of gas and vapour.

9.3.2.1.3 Cargoes liable to give off vapours or gases which can form an explosive mixture with air, should be stowed in a mechanically ventilated space.

9.3.2.1.4 Prohibition of smoking in dangerous areas should be enforced, and clearly legible "NO SMOKING" signs should be displayed.

9.3.2.2 Materials of class 5.1.

9.3.2.2.1 Cargoes of this class should be kept as cool and dry as reasonably practicable and should be stowed clear of all sources of heat or ignition. They should also be stowed "separated from" other combustible materials.

9.3.2.2.2 Before loading cargoes of this class, particular attention should be paid to the cleaning of the cargo spaces into which they will be loaded. As far as reasonably practicable, non-combustible securing and protecting materials should be used and only a minimum of dry wooden dunnage.

9.3.2.2.3 Precautions should be taken to avoid the penetration of oxidizing materials into other cargo spaces, bilges, etc.

9.3.2.3 Materials of class 7.

9.3.2.3.1 Cargo spaces used for the transport of Low Specific Activity Materials (LSA-I) and Surface Contaminated Objects (SCO-I) should not be used for other cargoes until decontaminated by a qualified person so that the non-fixed contamination on any surface when averaged over an area of 300 cm² does not exceed the following levels:

4 Bq/cm² (10^{-4} $\mu Ci/cm^2$)	for beta and gamma emitters and the low-toxicity alpha; emitters; natural uranium; natural thorium; uranium-235 or uranium-238; thorium-232; thorium-228 and thorium-230 when contained in ores, physical or chemical concentrates; radionuclides with a half-life of less than 10 days; and
0.4 Bq/cm^2 (10^{-5} $\mu Ci/cm^2$)	for all other alpha emitters.

9.3.2.4 Materials of class 8 or materials having similar properties.

9.3.2.4.1 These cargoes should be kept as dry as reasonably practicable.

9.3.2.4.2 Before loading these cargoes attention should be paid to the cleaning of the cargo spaces into which they will be loaded particularly to ensure whether these spaces are dry.

9.3.2.4.3 Penetration of these materials into other cargo spaces, bilges, wells and between the ceiling boards should be prevented.

9.3.2.4.4 Particular attention should be paid to the cleaning of the cargo spaces after unloading, as residues of these cargoes may be highly corrosive to the ship's structure. Hosing down of the cargo spaces followed by careful drying is preferred.

9.3.3 Segregation between bulk materials possessing chemical hazards and dangerous goods in packaged form

9.3.3.1 Unless otherwise required in this section or in the individual entries in Group B, segregation between bulk materials and dangerous goods in packaged form should be in accordance with the following table.

The Dangerous Goods List of the IMDG Code should be consulted for additional requirements with regard to stowage and segregation of packaged dangerous goods.

	Dangerous goods in packaged form																
Bulk cargo (classified as dangerous goods)	**Class**	**1.1 1.2 1.5**	**1.3**	**1.4**	**2.1**	**2.2 2.3**	**3**	**4.1**	**4.2**	**4.3**	**5.1**	**5.2**	**6.1**	**6.2**	**7**	**8**	**9**
Flammable solids	**4.1**	4	3	2	2	2	2	X	1	X	1	2	X	3	2	1	X
Substances liable to spontaneous combustion	**4.2**	4	3	2	2	2	2	1	X	1	2	2	1	3	2	1	X
Substances which, in contact with water, emit flammable gases	**4.3**	4	4	2	1	X	2	X	1	X	2	2	X	2	2	1	X
Oxidizing substances (agents)	**5.1**	4	4	2	2	X	2	1	2	2	X	2	1	3	1	2	X
Toxic substances	**6.1**	2	2	X	X	X	X	X	1	X	1	1	X	1	X	X	X
Radioactive materials	**7**	2	2	2	2	2	2	2	2	2	1	2	X	3	X	2	X
Corrosives	**8**	4	2	2	1	X	1	1	1	1	2	2	X	3	2	X	X
Miscellaneous dangerous substances and articles	**9**	X	X	X	X	X	X	X	X	X	X	X	X	X	X	X	X
Materials Hazardous only in Bulk (MHB)		X	X	X	X	X	X	X	X	X	X	X	X	3	X	X	X

1 = “away from”

2 = “separated from”

3 = “separated by a complete compartment or hold from”

4 = “separated longitudinally by an intervening complete compartment or hold from”

X = “No general segregation”

1 *Away from:*
Effectively segregated so that incompatible materials cannot interact dangerously in the event of an accident but may be carried in the same hold or compartment or on deck provided a minimum horizontal separation of 3 metres, projected vertically, is provided.

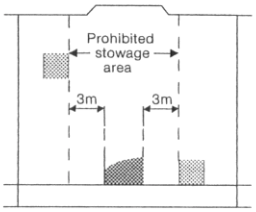

2 *Separated from:*
In different holds when stowed under deck. Provided an intervening deck is resistant to fire and liquid, a vertical separation, i.e. in different compartments, may be accepted as equivalent to this segregation.

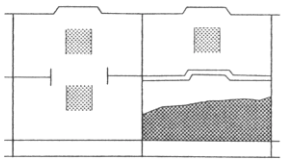

3 *Separated by a complete compartment or hold from:*
Means either a vertical or a horizontal separation. If the decks are not resistant to fire and liquid, then only a longitudinal separation, i.e. by an intervening complete compartment, is acceptable.

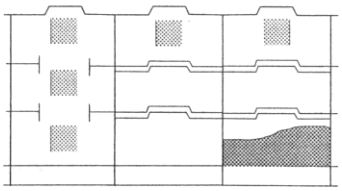

4 *Separated longitudinally by an intervening complete compartment or hold from:*
Vertical separation alone does not meet this requirement.

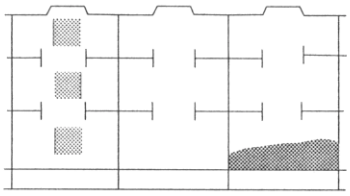

X No general segregation required: individual entries in this Code and the individual schedules in the IMDG Code should be consulted.

Legend

Reference bulk material

Incompatible package

Deck resistant to liquid and fire

NOTE: Vertical lines represent transverse watertight bulkheads between cargo spaces.

9.3.4 Segregation between solid bulk cargoes possessing chemical hazards

Unless otherwise required in this section or in the individual entries in Group B, segregation between solid bulk cargoes possessing chemical hazards should be according to the following table:

Solid bulk materials										
		4.1	4.2	4.3	5.1	6.1	7	8	9	MHB
Flammable solids	4.1	X								
Substances liable to spontaneous combustion	4.2	2	X							
Substances which, in contact with water, emit flammable gases	4.3	3	3	X						
Oxidizing substances (agents)	5.1	3	3	3	X					
Toxic substances	6.1	X	X	X	2	X				
Radioactive materials	7	2	2	2	2	2	X			
Corrosives	8	2	2	2	2	X	2	X		
Miscellaneous dangerous substances and articles	9	X	X	X	X	X	2	X	X	
Materials Hazardous only in Bulk (MHB)	MHB	X	X	X	X	X	2	X	X	X

Numbers relate to the following segregation terms:

2 *Separated from:*
In different holds when stowed under deck. Provided an intervening resistant to fire and liquid, a vertical separation, i.e. in different compartments, may be accepted as equivalent to this segregation.

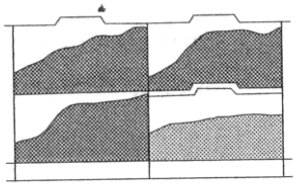

3 *Separated by a complete compartment or hold from*:
Means either a vertical or a horizontal separation. If the decks are not resistant to fire and liquid, then only a longitudinal separation, i.e. by an intervening complete compartment, is acceptable.

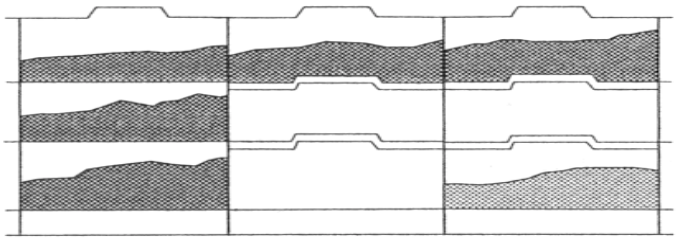

X No general segregation required: individual entries in this Code and the Dangerous Goods List in the IMDG Code should be consulted.

Legend

Reference Bulk Material 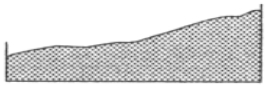

Incompatible package

Deck resistant to liquid and fire

NOTE: Vertical lines represent transverse watertight bulkheads between cargo spaces.

Section 10

Transport of solid wastes in bulk

10.1 Preamble

10.1.1 The transboundary movement of wastes represents a threat to human health and to the environment.

10.1.2 Wastes should, therefore, be carried in accordance with the relevant international recommendations and conventions and in particular, where it concerns transport by sea, with the provisions of this Code.

10.2 Definitions

10.2.1 Wastes, for the purpose of this section, are solid cargoes containing or contaminated with one or more constituents which are subject to the provisions of this Code applicable to cargoes of classes 4.1, 4.2, 4.3, 5.1, 6.1, 8 or 9 for which no direct use is envisaged but which are carried for dumping, incineration or other methods of disposal.

10.2.2 "Transboundary movement" means any shipment of wastes from an area under the national jurisdiction of one country to, or through an, area under the national jurisdiction of another country, or to, or through an, area not under the national jurisdiction of any country provided at least two countries are involved in the movement.

10.3 Applicability

10.3.1 The provisions of this section are applicable to the transport of solid wastes in bulk by ships and should be considered in conjunction with all other provisions of this Code.

10.3.2 Wastes containing or contaminated with radioactive materials are subject to the provisions applicable to the transport of radioactive materials and are not to be considered as wastes for the purposes of this section.

10.4 Permitted shipments

10.4.1 Transboundary movement of wastes is permitted to commence only when:

.1 notification has been sent by the competent authority of the country of origin, or by the generator or exporter through the channel of the competent authority of the country of origin, to the country of final destination; and

.2 the competent authority of the country of origin, having received the written consent of the country of final destination stating that the wastes will be safely incinerated or treated by other methods of disposal, has given authorization for the movement.

10.5 **Documentation**

10.5.1 In addition to the required documentation to be prepared for the transport of solid bulk cargoes all transboundary movements of wastes should be accompanied by a waste movement document from the point at which a transboundary movement commences to the point of disposal. This document should be available at all times to the competent authorities and to all persons involved in the management of waste transport operations.

10.5.2 If wastes, other than radioactive wastes, are offered for shipment, the word "waste" should be included in the shipping documents.

10.6 **Classification of wastes**

10.6.1 A waste containing only one constituent which is a cargo subject to the provisions of this Code applicable to cargoes of classes 4.1, 4.2, 4.3, 5.1, 6.1, 8 or 9 should be regarded as being that particular cargo. If the concentration of the constituent is such that the waste continues to present a hazard inherent in the constituent itself, it should be included in the class applicable to that constituent.

10.6.2 A waste containing two or more constituents which are cargoes subject to the provisions of this Code applicable to cargoes of classes 4.1, 4.2, 4.3, 5.1, 6.1, 8 or 9 should be classified under the applicable class in accordance with their dangerous characteristics and properties as described in 10.6.3 and 10.6.4.

10.6.3 The classification according to dangerous characteristics and properties should be carried out as follows:

.1 determination of the physical and chemical characteristics and physiological properties by measurement or calculation followed by classification according to the criteria applicable to the constituents; or

.2 if the determination is not practicable, the waste should be classified according to the constituent presenting the predominant hazard.

10.6.4 In determining the predominant hazard, the following criteria should be taken into account:

.1 if one or more constituents fall within a certain class and the waste presents a hazard inherent in these constituents, the waste should be included in that class; or

.2 if there are constituents falling under two or more classes, the classification of the waste should take into account the order of predominance applicable to cargoes with multiple hazards set out in the International Maritime Dangerous Goods Code (IMDG Code).

10.7 **Stowage and handling of wastes**

10.7.1 Wastes should be stowed and handled in accordance with the provisions of sections 1 to 9 of this Code and with any additional provision included in the individual entry of Group B applicable to the constituent presenting the predominant hazard.

10.8 **Segregation**

10.8.1 Wastes should be segregated in accordance with the provisions of 9.3.3 and 9.3.4, as appropriate.

10.9 **Accident procedures**

10.9.1 In the event that, during transport, a waste will constitute a danger for the carrying ship or the environment, the competent authorities of the countries of origin and destination should be immediately informed and advice on the action to be taken obtained from them.

Section 11

Stowage factor conversion tables

11.1 Cubic metres per metric tonne to cubic feet per long ton (2240 lb, 1016 kg)

Factor: 1 m^3/t = 35.87 ft^3/ton (rounded to the nearest hundredth of a ft^3/ton)

m^3/t	0.00	0.01	0.02	0.03	0.04	0.05	0.06	0.07	0.08	0.09
0.0	-	0.36	0.72	1.08	1.43	1.79	2.15	2.51	2.87	3.23
0.1	3.59	3.95	4.30	4.66	5.02	5.38	5.74	6.10	6.46	6.82
0.2	7.17	7.53	7.89	8.25	8.61	8.97	9.33	9.68	10.04	10.40
0.3	10.76	11.12	11.48	11.84	12.20	12.55	12.91	13.27	13.63	13.99
0.4	14.35	14.71	15.07	15.42	15.78	16.14	16.50	16.86	17.22	17.58
0.5	17.94	18.29	18.65	19.01	19.37	19.73	20.09	20.45	20.80	21.16
0.6	21.52	21.88	22.24	22.60	22.96	23.32	23.67	24.03	24.39	24.75
0.7	25.11	25.47	25.83	26.19	26.54	26.90	27.26	27.62	27.98	28.34
0.8	28.70	29.05	29.41	29.77	30.13	30.49	30.85	31.21	31.57	31.92
0.9	32.28	32.64	33.00	33.36	33.72	34.08	34.44	34.79	35.15	35.51
1.0	35.87	36.23	36.59	36.95	37.31	37.66	38.02	38.38	38.74	39.10
1.1	39.46	39.82	40.17	40.53	40.89	41.25	41.61	41.97	42.33	42.69
1.2	43.04	43.40	43.76	44.12	44.48	44.84	45.20	45.56	45.91	46.27
1.3	46.63	46.90	47.35	47.71	48.07	48.43	48.78	49.14	49.50	49.86
1.4	50.22	50.58	50.94	51.29	51.65	52.01	52.37	52.73	53.09	53.45
1.5	53.81	54.16	54.52	54.88	55.24	55.60	55.96	56.32	56.67	57.03
1.6	57.39	57.75	58.11	58.47	58.83	59.19	59.54	59.90	60.26	60.62

ft^3/ton

11.2 Cubic feet per long ton (ft^3/ton) (2240 lb, 1016 kg) to cubic metres per metric tonne (m^3/t) (2204 lb, 1000 kg)

Factor: 1 ft^3/ton = 0.02788 m^3/t (rounded to the nearest ten thousandth of a m^3/t)

ft^3/ton	0	1	2	3	4	5	6	7	8	9
0	-	0.0279	0.0558	0.0836	0.1115	0.1394	0.1676	0.1952	0.2230	0.2509
10	0.2788	0.3067	0.3346	0.3624	0.3903	0.4182	0.4461	0.4740	0.5018	0.5297
20	0.5576	0.5855	0.6134	0.6412	0.6691	0.6970	0.7249	0.7528	0.7806	0.8085
30	0.8364	0.8643	0.8922	0.9200	0.9479	0.9758	1.0037	1.0316	1.0594	1.0873
40	1.1152	1.1431	1.1710	1.1988	1.2267	1.2546	1.2825	1.3104	1.3382	1.3661
50	1.3940	1.4219	1.4498	1.4776	1.5055	1.5334	1.5613	1.5892	1.6170	1.6449
60	1.6728	1.7007	1.7286	1.7564	1.7843	1.8122	1.8401	1.8680	1.8958	1.9237
70	1.9516	1.9795	2.0074	2.0352	2.0631	2.0910	2.1189	2.1468	2.1746	2.2025
80	2.2304	2.2583	2.2862	2.3140	2.3419	2.3698	2.3977	2.4256	2.4534	2.4818
90	2.5092	2.5371	2.5650	2.5928	2.6207	2.6486	2.6765	2.7044	2.7322	2.7601
100	2.7880	2.8159	2.8438	2.8716	2.8995	2.9274	2.9553	2.9832	3.0110	3.0389

m^3/t

Section 12

References to Related Information and Recommendations

12.1 General

This section lists the subjects in this Code with their relevant requirements and recommendations from the different IMO instruments. The applicability of these relevant regulations depend on the date of construction of a ship or the date of entering into force of the requirement(s). It should be noted that this listing is not exhaustive. There are subjects where no reference is indicated. Other useful related references can be found in MSC/Circ.815, "List of IMO safety-related requirements and recommendations applicable to all ships and certain types of ships."

12.2 Reference List

The BC Code reference and the related IMO instrument and subject are in the following table. Column 1 contains the BC Code reference. Column 2 contains the reference to the IMO Instruments referring to the subject. Column 3 identifies the subject of the references.

BC Code reference (1)	Reference from IMO Instruments (2)	Description (3)

12.2.1 Dangerous goods & Classification

9.1.1.1	IMDG Code	Classification of Dangerous Goods

12.2.2 Stability

2.1.3	SOLAS II-1/22.1[14]	Stability information
2.1.3	SOLAS VI/6.1	Stability information
2.1.3	SOLAS VI/7.2.1	Stability information
2.1.3	SOLAS VI/7.4	Loading and trimming of bulk cargoes
2.1.3	SOLAS XII/8	Stability information

[14] A reference to a provision in the International Convention for the Safety of Life at Sea, 1974 is given in the form chapter/regulation. For example, SOLAS II-1/22.1 means regulation 22.1 in chapter II-1 of the Convention.

12.2.3 Fire extinguishing arrangements

General Group B	SOLAS II-2/10.7	Fire extinguishing arrangements in cargo spaces.
General Group B	FSS Code Chapter 9	Fixed fire detection and fire alarm systems.
	FSS Code Chapter 10 SOLAS II-2/19	Sample extraction smoke detection systems. Special requirements for ships carrying dangerous goods.
Group A, B and C	MSC/Circ.671	Non-combustible or low-fire-risk cargoes.

12.2.4 Ventilation

General Group B	International Convention on Loadlines 1966, Annex I, regulation 19	Ventilation openings.
General Group B	SOLAS II-2/9.7	Ventilation systems.
General Group B	SOLAS II-2/20.3	Precaution against ignition of flammable vapours.
General Group B	SOLAS II-2/19.3.4	Ventilation for ships carrying dangerous goods.

12.2.5 Personnel protection

General Group B	IMO/WHO/ILO Medical First Aid Guide for Use in Accidents Involving Dangerous Goods (MFAG)	First aid measures.
General Group B	SOLAS II-2/10.10 and FSS Code Chapter 3	Fire-fighter's outfit.
General Group B	SOLAS II-2/19.3.6.1 and FSS Code Chapter 3	Protective clothing.
General Group B	SOLAS II-2/19.3.6.2 and FSS Code Chapter 3	Self-contained breathing apparatus.

12.2.6 Gas detection

General	SOLAS VI/3.1	Oxygen analysis and gas detection equipment.
General	SOLAS VI/3.2	Oxygen analysis and gas detection equipment.
General	Safe Use of Pesticides in Ships, section 3.4.3.7	Gas detection equipment for fumigation.

12.2.7 Minimum information / Documentation

4.8.3	SOLAS II-2/19.4	Document of Compliance.
4.2	SOLAS VI/2.1	Cargo information.
4.2	SOLAS VI/2.2.2	Cargo information.
4.2	SOLAS VI/2.2.3	Cargo information.
4.2	SOLAS VI/2.3	Cargo information.
4.2	SOLAS VI/2.6.1	Stability and other cargo information.
4.2	SOLAS XII/10 SOLAS XII/8	Density of bulk cargoes. Cargo restrictions and other information.
4.2	SOLAS VI/2.7.2	Stability and other cargo information.
4.2	SOLAS VII/7.2	Dangerous cargo documentation.
4.2	SOLAS VII/7.2	Dangerous cargo documentation.

12.2.8 Insulation of machinery space boundaries

Group B	SOLAS II-2/3.2, 3.4, 3.10	Definitions of “A”, “B” and ”C” class divisions.
Group B	SOLAS II-2/9.2	Fire integrity of bulkheads and decks.
Group B	SOLAS II-2/19.3.8	Insulation standard (“A-60”).

12.2.9 Fumigation

3.6	Recommendations on the Safe Use of Pesticides in Ships, sections 3.1.3, 3.4 and 6.3	Fumigation, application of fumigation, fumigants, safety precautions.
3.6	SOLAS VI/4	Use of pesticides in ships.

12.2.10 Trimming procedures, Safe load capacity ’tween decks

5.1, 5.2	SOLAS VI/7.4	Trimming of bulk cargoes.
5.1, 5.2.2.2	SOLAS VI/7.5	Safe load capacity of ’tween decks.

12.2.11 Segregation

9.4	SOLAS VII/6.1	Stowage and segregation requirement.
9.4.3	IMDG Code, Chapter 7.2.6	Segregation between bulk cargoes possessing chemical hazards and dangerous goods in packaged form.

12.2.12 Transport of solid wastes in bulk

10.4	Basel Convention on the Control of Transboundary Movements of Hazardous Wastes and their Disposal (1989)	Permitted Transboundary movement of wastes.
10.6	IMDG Code, Chapter 2.0.3	Classification of waste materials.

12.2.13 Entering enclosed spaces

3.2.5 and Appendix 7	MSC/Circ.744, 14 June 1996	Recommendations for Entering enclosed spaces aboard ships.

12.2.14 Avoidance of excessive stresses

2.1.2.1	SOLAS XII/5	Structural strength.
2.1.2.1	SOLAS XII/6	Structural strength.
2.1.2.1	SOLAS XII/11	Loading instrument.

APPENDIX 1

INDIVIDUAL SCHEDULES OF
SOLID BULK CARGOES

ALFALFA

DESCRIPTION
Material derived from dried alfalfa grass. Shipped in the form of meal, pellets, etc. Requires a certificate from a competent authority or shipper stating that the material as shipped does not meet the requirements for seed cake. Shipments, which do meet the oil and moisture criteria for seed cake, should comply with the requirements for seed cake. (a), (b) or (c).

CHARACTERISTICS

ANGLE OF REPOSE	BULK DENSITY (kg/m^3)	STOWAGE FACTOR (m^3/t)
Not applicable	508-719	139-1.97
SIZE	**CLASS**	**GROUP**
Fine Powder	Not applicable	C

HAZARD
No special hazards.

This cargo is non-combustible or has a low fire-risk.

STOWAGE & SEGREGATION
No special requirements.

HOLD CLEANLINESS
No special requirements.

WEATHER PRECAUTIONS
Do not handle cargo during precipitation; keep dry, close hatches that are not being worked.

LOADING
Trim in accordance with the cargo information required by SOLAS VI/2. If any doubt exists, trim reasonably level to the boundaries of the cargo space so as to minimize the risk of shifting and to ensure that adequate stability will be maintained during the voyage.

PRECAUTIONS
No special requirements.

VENTILATION
Ventilation not required.

CARRIAGE
No special requirements.

DISCHARGE
No special requirements.

CLEAN UP
No special requirements.

ALUMINA

DESCRIPTION
Alumina is a fine, white odourless powder with little or no moisture. Insoluble in organic liquids. Moisture content: 0% to 5%.

CHARACTERISTICS

ANGLE OF REPOSE	BULK DENSITY (kg/m^3)	STOWAGE FACTOR (m^3/t)
Not applicable	781 - 1087	0.92 - 1.28
SIZE	**CLASS**	**GROUP**
Fine Powder	Not applicable	C

HAZARD
Irritating to eyes and mucous membranes.

This cargo is non-combustible or has a low fire-risk.

STOWAGE & SEGREGATION
No special requirements.

HOLD CLEANLINESS
No special requirements.

WEATHER PRECAUTIONS
Do not handle cargo during precipitation; keep dry, close hatches that are not being worked.

LOADING
Trim in accordance with the cargo information required by SOLAS VI/2. If any doubt exists, trim reasonably level to the boundaries of the cargo space so as to minimize the risk of shifting, and to ensure that adequate stability will be maintained during the voyage.

PRECAUTIONS
Alumina dust is very abrasive and penetrating. Protect machinery, accommodation, equipment and bilge wells. If wet, alumina is unpumpable; good cover on bilge wells to prevent ingress. Wear goggles and masks during loading and discharging.

VENTILATION
Ventilation not required.

CARRIAGE
No special requirements.

DISCHARGE
Maintain protection of accommodation and machinery against dust.

CLEAN UP
After hose down, use portable pump to clear water from holds - not the bilge pump. Cargo is insoluble in water.

ALUMINA, CALCINED

DESCRIPTION
Light to dark grey in colour. No moisture content.

CHARACTERISTICS

ANGLE OF REPOSE	BULK DENSITY (kg/m^3)	STOWAGE FACTOR (m^3/t)
Not applicable	1639	0.61
SIZE	**CLASS**	**GROUP**
Small particles and lumps	Not applicable	C

HAZARD
No special hazards.

This cargo is non-combustible or has a low fire-risk.

STOWAGE & SEGREGATION
No special requirements.

HOLD CLEANLINESS
No special requirements.

WEATHER PRECAUTIONS
Do not handle cargo during precipitation, keep dry, close hatches that are not being worked.

LOADING
Trim in accordance with the cargo information required by SOLAS VI/2. If any doubt exists, trim reasonably level to the boundaries of the cargo space so as to minimize the risk of shifting, and to ensure that adequate stability will be maintained during the voyage.

PRECAUTIONS
Protect machinery, accommodation and equipment from dust.

VENTILATION
Ventilation not required.

CARRIAGE
No special requirements.

DISCHARGE
Maintain protection of accommodation and machinery against dust.

CLEAN UP
After hose down, use portable pumps to clear water from holds – not the bilge pump. Cargo insoluble in water.

ALUMINA SILICA

DESCRIPTION
White, consists of alumina and silica crystals. Low moisture content (1% to 5%).
Lumps 60%.
Coarse grained powder – 40%

CHARACTERISTICS

ANGLE OF REPOSE	BULK DENSITY (kg/m^3)	STOWAGE FACTOR (m^3/t)
Not applicable	1429	0.70
SIZE	**CLASS**	**GROUP**
Not applicable	Not applicable	C

HAZARD
No special hazards

This cargo is non-combustible or has a low fire-risk.

STOWAGE & SEGREGATION
No special requirements.

HOLD CLEANLINESS
No special requirements.

WEATHER PRECAUTIONS
Do not handle cargo during precipitation, keep dry, close hatches that are not being worked.

LOADING
Trim in accordance with the cargo information required by SOLAS VI/2. If any doubt exists, trim reasonably level to the boundaries of the cargo space so as to minimize the risk of shifting, and to ensure that adequate stability will be maintained during the voyage.

PRECAUTIONS
Protect machinery, accommodation and equipment from dust.

VENTILATION
Ventilation not required.

CARRIAGE
No special requirements.

DISCHARGE
No special requirements.

CLEAN UP
After hose down, use portable pumps to clear water from holds – not the bilge pump. Cargo insoluble in water.

ALUMINA SILICA, Pellets

DESCRIPTION
White to off-white. No moisture content.

CHARACTERISTICS

ANGLE OF REPOSE	BULK DENSITY (kg/m^3)	STOWAGE FACTOR (m^3/t)
Not applicable	1190 - 1282	0.78 - 0.84
SIZE	**CLASS**	**GROUP**
Length: 6.4 mm – 25.4 mm Diameter: 6.4 mm	Not applicable	C

HAZARD
No special hazards.

This cargo is non-combustible or has a low fire-risk.

STOWAGE & SEGREGATION
No special requirements.

HOLD CLEANLINESS
No special requirements.

WEATHER PRECAUTIONS
Do not handle cargo during precipitation, keep dry, close hatches that are not being worked.

LOADING
Trim in accordance with the cargo information required by SOLAS VI/2. If any doubt exists, trim reasonably level to the boundaries of the cargo space so as to minimize the risk of shifting, and to ensure that adequate stability will be maintained during the voyage.

PRECAUTIONS
Protect machinery, accommodation and equipment from dust.

VENTILATION
Ventilation not required.

CARRIAGE
No special requirements.

DISCHARGE
No special requirements.

CLEAN UP
No special requirements.

ALUMINIUM FERROSILICON POWDER. UN 1395

DESCRIPTION
Fine powder or briquettes.

CHARACTERISTICS

ANGLE OF REPOSE	BULK DENSITY (kg/m^3)		STOWAGE FACTOR (m^3/t)
Not applicable	Not applicable		Not applicable
SIZE	**CLASS**	**SUBSIDIARY RISK**	**GROUP**
Not applicable	**4.3**	6.1	B

HAZARD
In contact with water may evolve hydrogen, a flammable gas which may form an explosive mixture in air. Impurities may, under similar conditions produce phosphine and arsine, which are highly toxic gases.

This cargo is non-combustible or has a low fire-risk.

STOWAGE & SEGREGATION
"Separated from" foodstuffs and all class 8 liquids.

HOLD CLEANLINESS
Clean and dry without any residue of previous cargoes.

WEATHER PRECAUTIONS
Do not handle cargo during precipitation, keep dry, close hatches that are not being worked.

LOADING
Trim in accordance with the cargo information required by SOLAS VI/2. If any doubt exists, trim reasonably level to the boundaries of the cargo space so as to minimize the risk of shifting, and to ensure that adequate stability will be maintained during the voyage.

PRECAUTIONS
Prior to loading, a certificate should be provided by the manufacturer or shipper stating that, after manufacture, the material was stored under cover, but exposed to the weather in the particle size to be shipped, for not less than 3 days prior to shipment.

Suitable detectors for quantitative measurements of hydrogen, phosphine and arsine should be on board.

Bulkheads to the engine-room should be gastight and should be inspected and approved by the competent authority.

During cargo handling "NO SMOKING" signs are to be posted on decks and in areas adjacent to cargo compartments and no naked lights should be permitted in these spaces.

At least two sets of self-contained breathing apparatus, additional to those required by regulation II-2/10.10 of the 1974 SOLAS Convention, as amended, should be provided.

VENTILATION
Continuous mechanical surface ventilation required. If maintaining ventilation endangers the ship or the cargo, it may be interrupted unless there is a risk of explosion or other danger due to interruption of the ventilation. In any case it must be maintained for a reasonable period prior to discharge.

CARRIAGE
Regularly monitor for hydrogen, phosphine and arsine. Record and keep the measurements.

DISCHARGE
No special requirements.

CLEAN UP
Double sweep clean. Avoid using water because danger of gas.

EMERGENCY PROCEDURES

SPECIAL EMERGENCY EQUIPMENT TO BE CARRIED Self-contained breathing apparatus.
EMERGENCY PROCEDURES Wear self-contained breathing apparatus. **EMERGENCY ACTION IN THE EVENT OF FIRE** Batten down and use CO_2 if available. **Do not use water**. **MEDICAL FIRST AID** Refer to the Medical First Aid Guide (MFAG) as amended.

ALUMINIUM NITRATE UN 1438

DESCRIPTION
Colourless or white crystals. Soluble in water.

CHARACTERISTICS

ANGLE OF REPOSE	BULK DENSITY (kg/m^3)	STOWAGE FACTOR (m^3/t)
Not applicable	Not applicable	Not applicable
SIZE	**CLASS**	**GROUP**
Not applicable	5.1	B

HAZARD
If involved in a fire will greatly intensify the burning of combustible materials and yield toxic nitrous fumes. Although non-combustible, mixtures with combustible material are easily ignited and may burn fiercely.

STOWAGE & SEGREGATION
"Separated from" foodstuffs.

HOLD CLEANLINESS
Clean and dry without any residue of previous cargoes.

WEATHER PRECAUTIONS
Do not handle cargo during precipitation; keep dry, close hatches that are not being worked.

LOADING
Trim in accordance with the cargo information required by SOLAS VI/2. If any doubt exists, trim reasonably level to the boundaries of the cargo space so as to minimize the risk of shifting, and to ensure that adequate stability will be maintained during the voyage.

PRECAUTIONS
Avoid contact with combustible materials.

VENTILATION
Ventilation not required.

CARRIAGE
No special requirements.

DISCHARGE
No special requirements.

CLEAN UP
No special requirements.

EMERGENCY PROCEDURES

SPECIAL EMERGENCY EQUIPMENT TO BE CARRIED

Protective clothing (gloves, overalls, headgear).
Self-contained breathing apparatus.
Spray nozzles.

EMERGENCY PROCEDURES

Wear protective clothing and self-contained breathing apparatus.

EMERGENCY ACTION IN THE EVENT OF FIRE

Use copious quantities of water, which is best applied in the form of a spray to avoid disturbing the surface of the material. The material may fuse or melt; in which condition application of water may result in extensive scattering of the molten materials. Exclusion of air or the use of CO_2 will not control the fire. Due consideration should be given to the effect on the stability of the ship due to accumulated water.

MEDICAL FIRST AID

Refer to the Medical First Aid Guide (MFAG) as amended.

ALUMINIUM SILICON POWDER, UNCOATED UN 1398

DESCRIPTION
Powder

CHARACTERISTICS

ANGLE OF REPOSE	BULK DENSITY (kg/m^3)	STOWAGE FACTOR (m^3/t)
Not applicable	Not applicable	Not applicable
SIZE	**CLASS**	**GROUP**
Not applicable	4.3	B

HAZARD
In contact with water may evolve hydrogen, a flammable gas which may form explosive mixtures with air. Impurities may, under similar circumstances, produce phosphine and arsine, which are highly toxic gases. May also evolve silanes, which are toxic and may ignite spontaneously.

This cargo is non-combustible or has a low fire-risk.

STOWAGE & SEGREGATION
"Separated from" foodstuffs and all class 8 liquids.

HOLD CLEANLINESS
Clean and dry.

WEATHER PRECAUTIONS
Do not load cargo during precipitation; keep dry, close hatches that are not being worked.

LOADING
Trim in accordance with the cargo information required by SOLAS VI/2. If any doubt exists, trim reasonably level to the boundaries of the cargo space so as to minimize the risk of shifting, and to ensure that adequate stability will be maintained during the voyage.

PRECAUTIONS
Prior to loading, a certificate should be provided by the manufacturer or shipper stating that, after manufacture, the material was stored under cover, but exposed to the weather in the particle size to be shipped, for not less than 3 days prior to shipment.

During cargo handling "NO SMOKING" signs are to be posted on decks and in areas adjacent to cargo compartments and no naked lights should be permitted in these spaces.

Suitable detectors for quantitative measurement of hydrogen, phosphine, arsine and silane should be on board. Regularly monitor for hydrogen, phosphine, arsine and silane. Record and retain the measurements.

Engine-room bulkheads should be gastight and inspected and approved by the competent authority.

The cargo spaces should be ventilated by at least two separate fans. The total ventilation should be at least six air changes per hour, based on the empty space. Ventilation should be such that any escaping gases cannot reach living quarters on or under the deck.

At least two sets of self-contained breathing apparatus, additional to those required by regulation II-2/10.10 of the 1974 SOLAS Convention, as amended, should be provided.

VENTILATION
Continuous mechanical surface ventilation required. If maintaining ventilation endangers the ship or the cargo, it may be interrupted unless there is a risk of explosion or other danger due to interruption of the ventilation. In any case it must be maintained for a reasonable period prior to discharge.

CARRIAGE
No special requirements.

DISCHARGE
No special requirements.

CLEAN UP
Double sweep clean. Avoid using water because danger of gas.

EMERGENCY PROCEDURES

SPECIAL EMERGENCY EQUIPMENT TO BE CARRIED Self-contained breathing apparatus.
EMERGENCY PROCEDURES Wear self-contained breathing apparatus. **EMERGENCY ACTION IN THE EVENT OF FIRE** Batten down and use CO_2 if available. **Do not use water** **MEDICAL FIRST AID** Refer to the Medical First Aid Guide (MFAG) as amended.

ALUMINIUM SMELTING BY - PRODUCTS UN 3170

DESCRIPTION

Aluminium smelting by-products are wastes from the aluminium manufacturing process. Grey or black powder or lumps with some metallic inclusions. The term encompasses various different waste materials, which include but are not limited to:

ALUMINIUM DROSS
ALUMINIUM SALT SLAGS
ALUMINIUM SKIMMINGS
SPENT CATHODES
SPENT POTLINER

CHARACTERISTICS

ANGLE OF REPOSE	BULK DENSITY (kg/m^3)	STOWAGE FACTOR $^{(m3/t)}$
Not applicable	1220	0.82
SIZE	**CLASS**	**GROUP**
Not applicable	4.3	B

HAZARD

Contact with water may cause heating with possible evolution of flammable and toxic gases such as hydrogen, ammonia and acetylene.

This cargo is non-combustible or has a low fire-risk.

Fire is unlikely but may follow an explosion of flammable gas and will be difficult to extinguish. In port, flooding maybe considered, but due consideration should be given to stability.

STOWAGE & SEGREGATION

"Separated from" foodstuffs.
"Separated from" all class 8 liquids.

HOLD CLEANLINESS

Clean and dry without any residue of previous cargoes.

WEATHER PRECAUTIONS

Cargo should be protected from precipitation during handling operations and be kept as dry as reasonably practicable.

LOADING
Trim in accordance with the cargo information required by SOLAS VI/2. If any doubt exists, trim reasonably level to the boundaries of the cargo space so as to minimize the risk of shifting, and to ensure that adequate stability will be maintained during the voyage.

Hot or wet material should not be loaded.

PRECAUTIONS
Whilst the ship is alongside and cargo hatches to holds containing aluminium-processing by-products are closed, the mechanical ventilation is to be operated continuously as weather permits.

During loading, "NO SMOKING" signs are to be posted on decks and in areas adjacent to cargo compartments and no naked lights should be permitted in these spaces.

Prior to loading, a certificate should be provided by the manufacturer or shipper stating that the material was stored under cover, but exposed to the weather in the particle size to be shipped, for not less than three days prior to shipment.

At least two self-contained breathing apparatus, additional to those required by regulation II-2/10.10 of the 1974 SOLAS Convention, as amended, should be provided.

Ventilation should be such that any escaping gases cannot reach living quarters on or under the deck.

Bulkheads to the engine-room should be gastight. Inadvertent pumping through machinery spaces should be avoided.

VENTILATION
Mechanical surface ventilation required.

CARRIAGE
Ensure that hatches are weather tight.

Suitable detectors for quantitative measurements of hydrogen, ammonia and acetylene should be on board. Regularly monitor for hydrogen, ammonia and acetylene. Record and keep the measurements.

DISCHARGE
No special requirements.

CLEAN UP
Avoid use of water because danger of gas.

EMERGENCY PROCEDURES

SPECIAL EMERGENCY EQUIPMENT TO BE CARRIED Nil
EMERGENCY PROCEDURES Nil **EMERGENCY ACTION IN THE EVENT OF FIRE** Batten down and use CO_2 if available. **Do not use water**. If this proves ineffective, endeavour to stop fire from spreading and head for the nearest suitable port. **MEDICAL FIRST AID** Refer to the Medical First Aid Guide (MFAG) as amended.

AMMONIUM NITRATE UN 1942
(see AMMONIUM NITRATE-BASED FERTILIZER UN 2067 & 2071)

(with not more than 0.2% total combustible substances including any organic substance calculated as carbon, to the exclusion of any other added substance.)

DESCRIPTION
White crystals, prills or granules. Wholly or partly soluble in water. Supporters of combustion. **Hygroscopic.**

CHARACTERISTICS

ANGLE OF REPOSE	BULK DENSITY (kg/m^3)	STOWAGE FACTOR (m^3/t)
27° - 42°	1000	1.00
SIZE	**CLASS**	**GROUP**
1 - 4 mm	5.1	B

HAZARD
Fertilizer dust might be irritating to skin and mucous membranes.

A major fire aboard a ship carrying these materials may involve a risk of explosion in the event of contamination (e.g. by fuel oil) or strong confinement. An adjacent detonation may also involve a risk of explosion. If heated strongly, they decompose, giving off toxic gases and gases which support combustion. Dust might be irritating to skin and mucous membranes.

STOWAGE & SEGREGATION
There should be no sources of heat or ignition in the cargo space.

"Separated by a complete compartment or hold from" combustible materials (particularly liquids), chlorates, chlorides, chlorites, hypochlorites, nitrites, permanganates and fibrous materials (e.g. cotton, jute, sisal, etc.).

"Separated from" all other goods.

HOLD CLEANLINESS
Clean and dry without any residue of previous cargoes.

WEATHER PRECAUTIONS
Do not handle cargo during precipitation; keep dry, close hatches that are not being worked.

LOADING
Trim in accordance with the cargo information required by SOLAS VI/2. If any doubt exists, trim reasonably level to the boundaries of the cargo space so as to minimize the risk of shifting and to ensure that adequate stability will be maintained during the voyage.

Prior to loading the following measures should be taken:

The temperature of the material should not be above 40°C.

Prior to loading, a certificate signed by the shipper should be presented to the ship's master stating that this requirement has been met.

The fuel tanks situated under the cargo spaces to be used for the transport of this material should be pressure tested to ascertain that there is no leakage of manholes and piping systems leading through the spaces.

All electrical equipment in the spaces to be used for this material that is not intrinsically safe should be electrically disconnected (by removal of links in the system, other than fuses) from the power source at a point external to the space. This situation should be maintained as long as the material is on board.

During loading, the following measures should be taken:

Smoking should not be allowed on deck and in the cargo spaces. "NO SMOKING" signs should be displayed. These precautions should be observed as long as the material is on board.

Bunkering or pumping of fuel oil should not be allowed; and as far as reasonably practicable, non-combustible securing and protecting materials and only a minimum of wooden dunnage should be used.

PRECAUTIONS

This material should only be transported in bulk when the requirements of section 5 of appendix 2 or equivalent tests satisfactory to the competent authority of the country of origin, have been met.

The possible need to apply water in an emergency and the consequent risk to the stability of the ship through fluidisation of the material should be considered before loading.

Adequate supplies of water for fire-fighting purposes should be immediately available from the fire main whenever this material is on board. In case this cannot be supplied by the ship's pumps it should be increased to the required amount by means of portable pumps.

Fire hoses should be laid out or be in position and ready for immediate use.
No welding, burning, cutting or other operations involving the use of fire, open flame, spark- or arc-producing equipment should be carried out in the vicinity of the cargo space except in an emergency.
Precautions should be taken to avoid the penetration of oxidizing materials into other cargo spaces, bilges, etc.

Cover cargo with plastic foil to minimise damage in case of water ingress.

Wear goggles, dust mask, gloves and coverall when handling or discharging dusty cargo.

The hatches of the holds should be kept free to be capable of being opened in case of an emergency.
If the bulkhead between the cargo space and the engine-room is not insulated to class A-60 standard, the competent authority should approve an equivalent arrangement.

VENTILATION
Do not ventilate.

CARRIAGE
Precautions should be taken to prevent water entering the holds.

DISCHARGE
Ammonium Nitrate is highly hygroscopic and will cake if wet. If cargo has hardened trimming may be necessary to avoid formation of overhanging faces.

CLEAN UP
Watch for blocked bilge wells and scuppers.

EMERGENCY PROCEDURES

SPECIAL EMERGENCY EQUIPMENT TO BE CARRIED

Protective clothing (boots, gloves, coveralls, and headgear).
Self-contained breathing apparatus.

EMERGENCY PROCEDURES

Wear protective clothing and self-contained breathing apparatus.

EMERGENCY ACTION IN THE EVENT OF FIRE

Fire in a cargo space containing this material: Open hatches to provide maximum ventilation. Ship's fixed gas fire extinguishing will be inadequate. Use copious quantities of water. Flooding of the cargo space may be considered but due consideration should be given to stability.

Fire in an adjacent cargo space: Open hatches to provide maximum ventilation. Heat transferred from fire in an adjacent space can cause the material to decompose with consequent evolution of toxic fumes. Dividing bulkheads should be cooled.

MEDICAL FIRST AID

Refer to the Medical First Aid Guide (MFAG) as amended.

AMMONIUM NITRATE-BASED FERTILIZER UN 2067

DESCRIPTION

Crystals, granules or prills. Wholly or partly soluble in water. Hygroscopic.

Ammonium nitrate-based fertilizers classified as UN 2067 are uniform mixtures containing ammonium nitrate as the main ingredient within the following composition limits:

.1 not less than 90% ammonium nitrate with not more than 0.2% total combustible/organic material calculated as carbon and with added matter, if any, which is inorganic and inert towards ammonium nitrate; or

.2 less than 90% but more than 70% ammonium nitrate with other inorganic materials or more than 80% but less than 90% ammonium nitrate mixed with calcium carbonate and/or dolomite and not more than 0.4% total combustible/organic material calculated as carbon; or

.3 ammonium nitrate-based fertilizers containing mixtures of ammonium nitrate and ammonium sulphate with more than 45% but less than 70% ammonium nitrate and not more than 0.4% total combustible organic material calculated as carbon such that the sum of the percentage compositions of ammonium nitrate and ammonium sulphate exceeds 70%.

Notes:

1. All nitrate ions for which there is present in the mixture a molecular equivalent of ammonium ions should be calculated as ammonium nitrate.

2. The transport of ammonium nitrate materials which are liable to self-heating sufficient to initiate decomposition is prohibited.

3. This entry may only be used for substances that do not exhibit explosive properties of Class 1 when tested in accordance to Test Series 1 and 2 of class 1 (see UN Manual of Tests and Criteria, part I).

CHARACTERISTICS

ANGLE OF REPOSE	BULK DENSITY (kg/m^3)	STOWAGE FACTOR (m3/t)
27°- 42°	900 - 1200	0.83 - 1.11
SIZE	**CLASS**	**GROUP**
1 - 5 mm	5.1	B

HAZARD
Supports combustion. A major fire aboard a ship carrying these substances may involve a risk of explosion in the event of contamination (e.g. by fuel oil) or strong confinement. An adjacent detonation may involve a risk of explosion.

If heated strongly decomposes, risk of toxic fumes and gases which supports combustion, in the cargo space and on deck.

Fertilizer dust might be irritating to skin and mucous membranes.

STOWAGE AND SEGREGATION
"Separated by a complete compartment or hold from" combustible materials (particularly liquid), bromates, chlorates, chlorites, hypochlorites, nitrites, perchlorates, permanganates, powdered metals and vegetable fibres (e.g. cotton, jute, sisal, etc.);

"Separated from" all other goods;

"Separated from" sources of heat or ignition (see also Loading);

Not to be stowed immediately adjacent to any tank or double bottom containing fuel oil heated to more than 50°C.

If the bulkhead between the cargo space and the engine-room is not insulated to class A-60 standard, the competent authority should approve an equivalent arrangement.

HOLD CLEANLINESS
Clean and dry without any residue of previous cargoes.

WEATHER PRECAUTIONS
Do not handle cargo during precipitation. Keep dry. Close hatches that are not being worked.

LOADING
Trim in accordance with the cargo information required by SOLAS VI/2. If any doubt exists, trim reasonably level to the boundaries of the cargo space so as to minimize the risk of shifting and to ensure the adequate stability will be maintained during the voyage.

Prior to loading the following measures should be taken:

- The temperature of the material should not be above 40°C. A certificate signed by the shipper should be presented to the ship's master stating this requirement has been met prior to loading.

- The fuel tanks situated under the cargo spaces to be used for the transport of this material should be pressure tested to ascertain that there is no leakage of manholes and piping systems leading through the spaces.

- All electrical equipment in the spaces to be used for this material that is not intrinsically safe should be electrically disconnected (by removal of links in the system, other than fuses) from the power source at a point external to the space. **This situation should be maintained as long as the material is on board.**

- The possible need to open hatches in case of fire to provide maximum ventilation and to apply water in an emergency and the consequent risk to the stability of the ship through fluidisation of the material should be considered.

During loading, the following measures should be taken:

- Bunkering or pumping of fuel oil should not be allowed.

- As far as reasonably practicable, non-combustible securing and protecting materials and only a minimum of wooden dunnage should be used.

PRECAUTIONS
Smoking should not be allowed on deck and in the cargo spaces. "NO SMOKING" signs should be displayed. These precautions should be observed as long as the material is on board**.**

Adequate supplies of water for fire-fighting purposes should be immediately available from the fire main whenever this material is on board. In case this cannot be supplied by the ship's pumps it should be increased to the required amount by means of portable pumps. Fire hoses should be laid out or be in position and ready for immediate use.

No welding, burning, cutting or other operations involving the use of fire, open flame, spark- or arc-producing equipment should be carried out in the vicinity of the cargo space except in an emergency.

Precautions should be taken to avoid the penetration of ammonium nitrate based fertilizers into other cargo spaces, bilges, etc.

Cover cargo with plastic foil to minimise damage in case of water ingress.

The hatches of the holds should be kept free to be capable of being opened in case of an emergency.

Wear goggles, dust mask, gloves and coverall when loading or discharging this material.

VENTILATION
Do not ventilate.

CARRIAGE
Precautions should be taken to prevent water entering the holds.

Monitoring of the cargo temperature may give an early indication of decomposition.

DISCHARGE
Implement the measures taken during loading.

Ammonium nitrate based fertilizers are highly hygroscopic and may cake in overhangs impairing the safety during discharge.

CLEAN UP
Watch for blocked bilge wells and scuppers.

EMERGENCY PROCEDURES

SPECIAL EMERGENCY EQUIPMENT TO BE CARRIED

Protective clothing (boots, gloves, coveralls, and headgear).
Self-contained breathing apparatus.

EMERGENCY PROCEDURES

Wear protective clothing and self-contained breathing apparatus.

EMERGENCY ACTION IN THE EVENT OF FIRE

Fire in a cargo space containing this material: Open hatches to provide maximum ventilation. Ship's fixed fire-fighting installation will be inadequate. Use copious quantities of water. Flooding of the cargo space may be considered but due consideration should be given to stability.

Fire in an adjacent cargo space: Open hatches to provide maximum ventilation. Heat transferred from fire in an adjacent space can cause the material to decompose with consequent evolution of toxic fumes. Dividing bulkheads should be cooled.

MEDICAL FIRST AID

Refer to the Medical First Aid Guide (MFAG) as amended.

AMMONIUM NITRATE BASED FERTILIZER UN 2071

DESCRIPTION

Usually granules. Wholly or partly soluble in water. Hygroscopic.

Ammonium nitrate-based fertilizers classified as UN 2071 are uniform ammonium nitrate based fertilizer mixtures of the nitrogen, phosphate or potash, containing not more than 70% ammonium nitrate and not more than 0.4% total combustible organic material calculated as carbon or with not more than 45% ammonium nitrate and unrestricted combustible material. Fertilizers within these composition limits are not subject to the provisions of this schedule when shown by a trough Test (see UN Manual of Tests and Criteria, part III, sub-section 38.2) that they are not liable to self-sustaining decomposition.

Notes:

1. All nitrate ions for which there is present in the mixture a molecular equivalent of ammonium ions should be calculated as ammonium nitrate.

2. The transport of ammonium nitrate materials which are liable to self-heating sufficient to initiate a decomposition is prohibited.

3. The NPK proportions for a fertilizer should not be used a s a guide to its ability to undergo self-sustaining decomposition as this depends on the chemical species present (refer to UN Manual of Tests and Criteria, part III, sub-section 38.2).

CHARACTERISTICS

ANGLE OF REPOSE	BULK DENSITY (kg/m^3)	STOWAGE FACTOR (m3/t)
27°- 42°	900 - 1200	0.83 - 1.11
SIZE	**CLASS**	**GROUP**
1 - 5 mm	9	B

HAZARD

These mixtures may be subject to self-sustaining decomposition if heated. The temperature in such a reaction can reach 500°C. Decomposition, once initiated, may spread throughout the remainder, producing gases which are toxic. None of these mixtures is subject to the explosion hazard.

Fertilizer dust might be irritating to skin and mucous membranes.

STOWAGE AND SEGREGATION

"Separated by a complete compartment or hold from" combustible materials (particularly liquid), bromates, chlorates, chlorites, hypochlorites, nitrites, perchlorates, permanganates, powdered metals and vegetable fibres (e.g. cotton, jute, sisal, etc.).

"Separated from" all other goods.

"Separated from" sources of heat or ignition (see also Loading).

Not to be stowed immediately adjacent to any tank or double bottom containing fuel oil heated to more than 50°C.

Fertilizers of this type should be stowed out of direct contact with a metal engine-room boundary. This may be done, for example, by using flame retardant bags containing inert materials or by any equivalent barrier approved by the competent authority. This requirement need not apply to short international voyages.

HOLD CLEANLINESS
Clean and dry without any residue of previous cargoes.

WEATHER PRECAUTIONS
Do not handle cargo during precipitation. Keep dry. Close hatches that are not being worked.

LOADING
Trim in accordance with the cargo information required by SOLAS VI/2. If any doubt exists, trim reasonably level to the boundaries of the cargo space so as to minimize the risk of shifting and to ensure the adequate stability will be maintained during the voyage.

Prior to loading the following measures should be taken:

- All electrical equipment in the spaces to be used for this material that is not intrinsically safe should be electrically disconnected (by removal of links in the system, other than fuses) from the power source at a point external to the space. **This situation should be maintained as long as the material is on board.**

- The possible need to open hatches in case of fire to provide maximum ventilation and to apply water in an emergency and the consequent risk to the stability of the ship through fluidisation of the material should be considered. In addition, if decomposition occurs, the residue left after decomposition may have only half the mass of the original cargo. This loss of mass may also affect the stability of the ship and shall be considered before loading.

During loading, the following measures should be taken:

- Bunkering or pumping of fuel oil should not be allowed.

PRECAUTIONS
Smoking should not be allowed on deck and in the cargo spaces. "NO SMOKING" signs should be displayed. These precautions should be observed as long as the material is on board.

Adequate supplies of water for fire-fighting purposes should be immediately available from the fire main whenever this material is on board. In case this cannot be supplied by the ship's pumps it should be increased to the required amount by means of portable pumps. Fire hoses should be laid out or be in position and ready for immediate use.

No welding, burning, cutting or other operations involving the use of fire, open flame, spark- or arc- producing equipment should be carried out in the vicinity of the cargo space except in an emergency.

Cover cargo with plastic foil to minimise damage in case of water ingress.

The hatches of the holds should be kept free to be capable of being opened in case of an emergency.

Wear goggles, dust mask, gloves and coverall when loading or discharging this material.

VENTILATION
Do not ventilate.

CARRIAGE
Precautions should be taken to prevent water entering the holds.

Monitoring of the cargo temperature may give an early indication of decomposition.

DISCHARGE
Ammonium nitrate based fertilizers are highly hygroscopic and may cake in overhangs impairing the safety during discharge.

Implement the measures taken during loading.

CLEAN UP
Watch for blocked bilge wells and scuppers.

EMERGENCY PROCEDURES

SPECIAL EMERGENCY EQUIPMENT TO BE CARRIED

Protective clothing (boots, gloves, coveralls, and headgear).
Self-contained breathing apparatus.

EMERGENCY PROCEDURES

Wear protective clothing and self-contained breathing apparatus.

EMERGENCY ACTION IN THE EVENT OF FIRE

Fire in a cargo space containing this material: Open hatches to provide maximum ventilation. Ship's fixed fire-fighting installation will be inadequate. Use copious quantities of water. Flooding of the cargo space may be considered but due consideration should be given to stability.

Fire in an adjacent cargo space: Open hatches to provide maximum ventilation. Heat transferred from fire in an adjacent space can cause the material to decompose with consequent evolution of toxic fumes. Dividing bulkheads should be cooled.

MEDICAL FIRST AID

Refer to the Medical First Aid Guide (MFAG) as amended.

AMMONIUM NITRATE BASED FERTILIZER (non-hazardous)
(see AMMONIUM NITRATE-BASED FERTILIZER UN 2067 & 2071)

DESCRIPTION
Crystals, granules or prills non-cohesive when dry. Wholly or partly soluble in water.

Ammonium nitrate based fertilizers transported in conditions mentioned in this schedule are uniform mixtures containing ammonium nitrate as the main ingredient within the following composition limits:

.1 not more than 70% ammonium nitrate with other inorganic materials;

.2 not more than 80% ammonium nitrate mixed with calcium carbonate and/or dolomite and not more than 0.4% total combustible organic material calculated as carbon;

.3 nitrogen type ammonium nitrate based fertilizers containing mixtures of ammonium nitrate and ammonium sulphate with not more than 45% ammonium nitrate and not more than 0.4% total combustible organic material calculated as carbon; and

.4 uniform ammonium nitrate based fertilizer mixtures of the nitrogen, phosphate or potash, containing not more than 70% ammonium nitrate and not more than 0.4% total combustible organic material calculated as carbon or with not more than 45% ammonium nitrate and unrestricted combustible material. Fertilizers within these composition limits are not subject to the provisions of this schedule when shown by a trough Test (see UN Manual of Tests and Criteria, part III, sub-section 38.2) that they are liable to self-sustaining decomposition or if they contain an excess of nitrate greater than 10% by mass.

Notes:

1. All nitrate ions for which there is present in the mixture a molecular equivalent of ammonium ions should be calculated as ammonium nitrate.

2. The transport of ammonium nitrate materials which are liable to self-heating sufficient to initiate decomposition is prohibited.

3. The NPK proportions for a fertilizer should not be used a s a guide to its ability to undergo self-sustaining decomposition as this depends on the chemical species present (refer to UN Manual of Tests and Criteria, part III, sub-section 38.2).

4. This schedule may only be used for substances that do not exhibit explosive properties of Class 1 when tested in accordance to Test Series 1 and 2 of Class 1 (see UN Manual of Tests and criteria, part I).

5. This schedule may only be used if the chemical or physical properties of an ammonium nitrate based fertilizer are such that when tested it does not meet the established defining criteria of any class.

CHARACTERISTICS

ANGLE OF REPOSE	BULK DENSITY (kg/m^3)	STOWAGE FACTOR (m^3/t)
27°- 42°	1000 - 1200	0.83 - 1.00
SIZE	**CLASS**	**GROUP**
1 - 4 mm	Not applicable	C

HAZARD
This cargo is non-combustible or with a low fire-risk.

Even though this cargo is classified as non-hazardous, it will behave in the same way as the ammonium nitrate based fertilizers classified in class 9 under UN 2071 when heated strongly, by decomposing and giving off toxic gases.

The speed of the decomposition reaction is lower, but there will be a risk of toxic fumes in the cargo space and on deck if the cargo is strongly heated.

Fertilizer dust might be irritating to skin and mucous membranes.

STOWAGE AND SEGREGATION
The compatibility of non-hazardous ammonium nitrate based fertilizers with other materials which may be stowed in the same cargo space should be considered before loading.

"Separated from" sources of heat or ignition (see also Loading) such as:

Not to be stowed immediately adjacent to any tank or double bottom containing fuel oil heated to more than 50°C.

Fertilizers of this type should be stowed out of direct contact with a metal engine-room boundary. This may be done, for example, by using flame retardant bags containing inert materials or by any equivalent barrier approved by the competent authority. This requirement need not apply to short international voyages.

HOLD CLEANLINESS
Clean and dry without any residue of previous cargoes.

WEATHER PRECAUTIONS
Do not handle cargo during precipitation. Keep dry. Close hatches that are not being worked.

LOADING
Trim in accordance with the cargo information required by SOLAS VI/2. If any doubt exists, trim reasonably level to the boundaries of the cargo space so as to minimize the risk of shifting and to ensure the adequate stability will be maintained during the voyage.

Prior to loading the following measures should be taken:

- Particular attention should be paid to the cleaning of the cargo spaces into which the non-hazardous ammonium nitrate based fertilizers will be loaded.

- All electrical equipment in the spaces to be used for this material that is not intrinsically safe should be electrically disconnected (by removal of links in the system, other than fuses) from the power source at a point external to the space. This situation should be maintained as long as the material is on board.

- The possible need to open hatches in case of fire to provide maximum ventilation and to apply water in an emergency and the consequent risk to the stability of the ship through fluidisation of the material should be considered. In addition, if decomposition occurs, the residue left after decomposition may have only half the mass of the original cargo. This loss of mass may also affect the stability of the ship and shall be considered before loading.

During loading, the following measures should be taken:

- Bunkering or pumping of fuel oil should not be allowed.

PRECAUTIONS
Smoking should not be allowed on deck and in the cargo spaces. “NO SMOKING” signs should be displayed. These precautions should be observed as long as the material is on board.

No welding, burning, cutting or other operations involving the use of fire, open flame, spark- or arc-producing equipment should be carried out in the vicinity of the cargo space except in an emergency.

Cover cargo with plastic foil to minimise damage in case of water ingress.

The hatches of the holds should be kept free to be capable of being opened in case of an emergency.

Wear goggles, dust mask, gloves and coverall when loading or discharging this material.

VENTILATION
Do not ventilate.

CARRIAGE
Precautions should be taken to prevent water entering the holds.
Monitoring of the cargo temperature may give an early indication of decomposition.

DISCHARGE
Implement the measures taken during loading.

Ammonium nitrate based fertilizers are highly hygroscopic and may cake in overhangs impairing the safety during loading and discharge.

CLEAN UP
Watch for blocked bilge wells and scuppers.

EMERGENCY PROCEDURES

SPECIAL EMERGENCY EQUIPMENT TO BE CARRIED

Protective clothing (boots, gloves, coveralls, and headgear).
Self-contained breathing apparatus.

EMERGENCY PROCEDURES

Wear protective clothing and self-contained breathing apparatus.

EMERGENCY ACTION IN THE EVENT OF FIRE

Fire in a cargo space containing this material: Open hatches to provide maximum ventilation. Ship's fixed fire-fighting installation will be inadequate. Use copious quantities of water. Flooding of the cargo space may be considered but due consideration should be given to stability.

Fire in an adjacent cargo space: Open hatches to provide maximum ventilation. Heat transferred from fire in an adjacent space can cause the material to decompose with consequent evolution of toxic fumes. Dividing bulkheads should be cooled.

MEDICAL FIRST AID

Refer to the Medical First Aid Guide (MFAG) as amended.

AMMONIUM SULPHATE

DESCRIPTION
Brownish grey to white crystals. Soluble in water. Free flowing. Absorbs moisture. Moisture content 0.04% to 0.5%. Ammonia odour. Subject to natural loss in weight.

CHARACTERISTICS

ANGLE OF REPOSE	BULK DENSITY (kg/m^3)	STOWAGE FACTOR (m^3/t)
28° - 35°	943 - 1052	0.95 - 1.06
SIZE	**CLASS**	**GROUP**
2 mm - 4 mm	Not applicable	C

HAZARD
Dust may cause skin and eye irritation. Harmful if swallowed. Danger of heavy corrosion of framing, side plating etc. if sweating of cargo space occurs.

This cargo is non-combustible or has a low fire-risk.

STOWAGE & SEGREGATION
No special requirements.

HOLD CLEANLINESS
Clean and dry without any residue of previous cargoes.

WEATHER PRECAUTIONS
Do not handle cargo during precipitation; keep dry, close hatches that are not being worked.

LOADING
Avoid generating dust when loading. Normally, loading rates are high. Trim the cargo in accordance with the cargo information required by SOLAS VI/2. If any doubt exists, trim reasonably level to the boundaries of the cargo space so as to minimize the risk of shifting and to ensure that adequate stability will be maintained during the voyage.

PRECAUTIONS
Prevent moist air entering holds, as necessary. Persons involved in loading or unloading should wear goggles, gloves and dust filter masks.

VENTILATION
Do not ventilate.

CARRIAGE
No special requirements.

DISCHARGE
If cargo has hardened, trimming may be necessary to avoid the formation of overhanging faces.

CLEAN UP
Holds should be thoroughly cleaned and washed out to remove all traces of cargo. Dry thoroughly.

ANTIMONY ORE AND RESIDUE

DESCRIPTION
Lead grey mineral, subject to black tarnish.

CHARACTERISTICS

ANGLE OF REPOSE	BULK DENSITY (kg/m^3)	STOWAGE FACTOR (m^3/t)
Not applicable	2381 - 2941	0.34 - 0.42
SIZE	**CLASS**	**GROUP**
Not applicable	Not applicable	C

HAZARD
This cargo is non-combustible or has a low fire-risk.

If involved in a fire dangerous fumes of antimony and sulphur oxides can evolve.

STOWAGE & SEGREGATION
No special requirements.

HOLD CLEANLINESS
No special requirements.

WEATHER PRECAUTIONS
No special requirements.

LOADING
Trim in accordance with the cargo information required by SOLAS VI/2. If doubt exists, trim reasonably level to the boundaries of the cargo space so as to minimize the risk of shifting and to ensure that adequate stability will be maintained during the voyage.

As the density is extremely high, care should be taken to ensure that the cargo is evenly spread across the tank top to equalize the weight distribution. Do not pile the cargo in the centre of the hatch during loading.

PRECAUTIONS
Protect machinery, accommodation and equipment from dust.

VENTILATION
Ventilation not required.

CARRIAGE
No special requirements.

DISCHARGE
No special requirements.

CLEAN UP
No special requirements.

BARIUM NITRATE UN 1446

DESCRIPTION
Glossy white crystals or powder. Soluble in water.

CHARACTERISTICS

ANGLE OF REPOSE	BULK DENSITY (kg/m^3)		STOWAGE FACTOR (m^3/t)
Not applicable	Not applicable		Not applicable
SIZE	**CLASS**	**SUBSIDIARY RISK**	**GROUP**
Fine Powder	**5.1**	6.1	B

HAZARD
Toxic if swallowed or by dust inhalation. If involved in a fire mixture with combustible materials are readily ignited and may burn fiercely.

STOWAGE & SEGREGATION
"Separated from" foodstuffs.

HOLD CLEANLINESS
Clean and dry without any residue of previous cargoes.

WEATHER PRECAUTIONS
No special requirements.

LOADING
Trim in accordance with the cargo information required by SOLAS VI/2. If any doubt exists, trim reasonably level to the boundaries of the cargo space so as to minimize the risk of shifting and to ensure that adequate stability will be maintained during the voyage.

PRECAUTIONS
Persons involved in cargo handling should wear protective clothing, goggles and dust filter masks.

Make sure bilge wells are dry and covered to prevent cargo ingress.

VENTILATION
Surface ventilation required.

CARRIAGE
No special requirements.

DISCHARGE
No special requirements.

CLEAN UP
No special requirements.

EMERGENCY PROCEDURES

SPECIAL EMERGENCY EQUIPMENT TO BE CARRIED

Protective clothing (gloves, boots, overalls, headgear). Self-contained breathing apparatus. Spray nozzles.

EMERGENCY PROCEDURES

Wear protective clothing and self-contained breathing apparatus.

EMERGENCY ACTION IN THE EVENT OF FIRE

Use copious amounts of water, which is best applied in the form of a spray to avoid disturbing the surface of the material. The material may fuse or melt, in which condition application of water may result in excessive scattering of molten materials. Exclusion of air or the use of CO_2 will not control the fire. Due consideration should be given to the effect of accumulated water has on the ship's stability.

MEDICAL FIRST AID

Refer to the Medical First Aid Guide (MFAG) as amended.

BARYTES

DESCRIPTION
Crystalline ore mineral. A sulphate of Barium. Moisture 1% to 6%.

CHARACTERISTICS

ANGLE OF REPOSE	BULK DENSITY (kg/m^3)	STOWAGE FACTOR (m^3/t)
Not applicable	2941	0.34
SIZE	**CLASS**	**GROUP**
80% lumps: 6.4 - 101.6 mm 20% fines: less than 6.4 mm	Not applicable	C

HAZARD
No special hazards.

This cargo is non-combustible or has a low fire-risk.

STOWAGE & SEGREGATION
No special requirements.

HOLD CLEANLINESS
No special requirements.

WEATHER PRECAUTIONS
No special requirements.

LOADING
Trim in accordance with the cargo information required by SOLAS VI/2. If any doubt exists, trim reasonably level to the boundaries of the cargo space so as to minimize the risk of shifting and to ensure that adequate stability will be maintained during the voyage.

As the density of the cargo is extremely high, care should be taken to ensure that the cargo is evenly spread across the tank top to equalize the weight distribution. Do not pile the cargo in the centre of the hatch during loading.

PRECAUTIONS
Protect machinery, accommodation and equipment from dust.

VENTILATION
Ventilation not required.

CARRIAGE
No special requirements.

DISCHARGE
No special requirements.

CLEAN UP
No special requirements.

BAUXITE

DESCRIPTION
A brownish, yellow claylike and earthy mineral. Moisture content: 0% to 10%. Insoluble in water

CHARACTERISTICS

ANGLE OF REPOSE	BULK DENSITY (kg/m^3)	STOWAGE FACTOR (m^3/t)
Not applicable	1190 - 1389	0.72 - 0.84
SIZE	**CLASS**	**GROUP**
70% - 90% lumps: 2.5 mm to 500 mm 10% - 30% powder	Not applicable	C

HAZARD
No special hazards.

This cargo is non-combustible or has a low fire-risk.

STOWAGE & SEGREGATION
No special requirements.

HOLD CLEANLINESS
No special requirements.

WEATHER PRECAUTIONS
No special requirements.

LOADING
Trim in accordance with the cargo information required by SOLAS VI/2. If doubt exists, trim reasonably level to the boundaries of the cargo space so as to minimize the risk of shifting and to ensure that adequate stability will be maintained during the voyage.

PRECAUTIONS
Protect bilge wells against ingress.

VENTILATION
Ventilation not required.

CARRIAGE
No special requirements.

DISCHARGE
No special requirements.

CLEAN UP
No special requirements.

BIOSLUDGE

DESCRIPTION
Heat-dried activated sludge. Very fine granular product. Moisture: 3% to 5%. Black speckled colour.

CHARACTERISTICS

ANGLE OF REPOSE	BULK DENSITY (kg/m^3)	STOWAGE FACTOR (m^3/t)
Not applicable	654	1.53
SIZE	**CLASS**	**GROUP**
Not applicable	Not applicable	C

HAZARD
No special hazards.

This cargo is non-combustible or has a low fire-risk

STOWAGE & SEGREGATION
No special requirements.

HOLD CLEANLINESS
No special requirements.

WEATHER PRECAUTIONS
No special requirements.

LOADING
Trim in accordance with the cargo information required by SOLAS VI/2. If doubt exists, trim reasonably level to the boundaries of the cargo space so as to minimize the risk of shifting and to ensure that adequate stability will be maintained during the voyage.

PRECAUTIONS
Protect machinery, accommodation and equipment from dust.

Persons involved in cargo handling should wear protective clothing, goggles and dust filter masks.

VENTILATION
Ventilation not required.

CARRIAGE
No special requirements.

DISCHARGE
No special requirements.

CLEAN UP
No special requirements.

BORAX (PENTAHYDRATE CRUDE)

DESCRIPTION
A chemical compound of Boracic Acid and soda. Free flowing powder or granules. Grey colour. Dusty.

CHARACTERISTICS

ANGLE OF REPOSE	BULK DENSITY (kg/m^3)	STOWAGE FACTOR (m^3/t)
Not applicable	1087	0.92
SIZE	**CLASS**	**GROUP**
Up to 2.36 mm	Not applicable	C

HAZARD
No special hazards.

This cargo is non-combustible or has a low fire-risk.

STOWAGE & SEGREGATION
No special requirements.

HOLD CLEANLINESS
No special requirements.

WEATHER PRECAUTIONS
Do not handle cargo during precipitation; keep dry, close hatches that are not being worked.

LOADING
Trim in accordance with the cargo information required by SOLAS VI/2. If any doubt exists, trim reasonably level to the boundaries of the cargo space so as to minimize the risk of shifting and to ensure that adequate stability will be maintained during the voyage.

PRECAUTIONS
Protect machinery, accommodation and equipment from dust. Persons involved in cargo handling should wear protective clothing, goggles and dust filter masks.

VENTILATION
Ventilation not required.

CARRIAGE
No special requirements.

DISCHARGE
Borax is hygroscopic and will cake if wet. If cargo has hardened trimming may be necessary to avoid formation of overhanging faces.

CLEAN UP
No special requirements.

BORAX, ANHYDROUS
(crude or refined)

DESCRIPTION
Crude is normally of yellow white appearance. When highly refined becomes white crystalline. Dusty and hygroscopic.

CHARACTERISTICS

ANGLE OF REPOSE	BULK DENSITY (kg/m^3)	STOWAGE FACTOR (m^3/t)
35	1282	0.78
SIZE	**CLASS**	**GROUP**
Granules less than 1.4 mm	Not applicable	C

HAZARD
Dust very abrasive and irritating, but not toxic, if inhaled.

This cargo is non-combustible or has a low fire-risk.

STOWAGE & SEGREGATION
No special requirements.

HOLD CLEANLINESS
No special requirements.

WEATHER PRECAUTIONS
No special requirements.

LOADING
Trim in accordance with the cargo information required by SOLAS VI/2. If any doubt exists, trim reasonably level to the boundaries of the cargo space so as to minimize the risk of shifting and to ensure that adequate stability will be maintained during the voyage.

PRECAUTIONS
Protect machinery, accommodation and equipment from dust. Persons involved in cargo handling should wear protective clothing, goggles and dust filter masks.

VENTILATION
Ventilation not required.

CARRIAGE
No special requirements.

DISCHARGE
Borax is hygroscopic and will cake if wet. If cargo has hardened trimming may be necessary to avoid formation of overhanging faces.

CLEAN UP
No special requirements.

BROWN COAL BRIQUETTES

DESCRIPTION
Brown Coal (Lignite) Briquettes are manufactured by pressing dried brown coal particles into compressed blocks.

CHARACTERISTICS

ANGLE OF REPOSE	BULK DENSITY (kg/m^3)	STOWAGE FACTOR (m^3/t)
Not applicable	750	1.34
SIZE	**CLASS**	**GROUP**
Mainly up to 50 mm	MHB	B

HAZARD
Briquettes are easily ignited, liable to spontaneous combustion and will deplete oxygen in cargo space.

STOWAGE & SEGREGATION
Refer to appendix.

HOLD CLEANLINESS
Clean and dry without any residue of previous cargoes.

WEATHER PRECAUTIONS
No special requirements.

LOADING
Refer to appendix to this schedule.

PRECAUTIONS
Protect machinery, accommodation and equipment from dust. Persons involved in cargo handling should wear goggles. Refer to appendix to this schedule.

VENTILATION
Do not ventilate. Refer to the appendix to this schedule.

CARRIAGE
Refer to appendix and ensure that the requirements enumerated in the appendix are strictly adhered to.

DISCHARGE
Refer to appendix to this schedule.

CLEAN UP
Ensure bilges are clean. Remove previous cargo battens.

EMERGENCY PROCEDURES

SPECIAL EMERGENCY EQUIPMENT TO BE CARRIED
Nil
EMERGENCY PROCEDURES Nil **EMERGENCY ACTION IN THE EVENT OF FIRE** Batten down. Exclusion of air may be sufficient to control fire. **Do not use water.** Seek expert advice and consider heading for the nearest suitable port. **MEDICAL FIRST AID** Refer to the Medical First Aid Guide (MFAG) as amended.

REMARK
The use of CO_2 or inert gas, if available, should be withheld until fire is apparent.

APPENDIX

BROWN COAL BRIQUETTES

HAZARD

1. Briquettes are easily ignited, liable to spontaneous heating and will deplete oxygen in the cargo space.

2. Briquettes are subject to oxidation, leading to depletion of oxygen and an increase in carbon dioxide in the cargo space (see also section 3 and Appendix 7).

3. Brown coal briquettes are liable to self-heating that can lead to spontaneous combustion in the cargo space. If this occurs, flammable and toxic gases, including carbon monoxide, may be produced. Carbon monoxide is an odourless gas, slightly lighter than air, and has flammable limits in air of 12% to 75% by volume. It is toxic by inhalation, with an affinity for blood haemoglobin over 200 times that of oxygen. The recommended Threshold Limit Value (TLV) for carbon monoxide exposure is 50 ppm.

STOWAGE & SEGREGATION

1. Boundaries of cargo spaces where materials are carried should be resistant to fire and liquids.

2. Briquettes should be "separated from" goods of Classes 1 (Division1.4), 2, 3, 4, and 5 in packaged form (see IMDG Code) and "separated from" solid bulk material of classes 4 and 5.1.

3. Stowage of goods of class 5.1 in packaged form or solid bulk materials of Class 5.1 above or below a coal cargo should be prohibited.

4. Briquettes should be "separated longitudinally by an intervening complete compartment to hold from" goods of class 1 other than Division 1.4.

5 The briquette cargo should not be stowed adjacent to hot areas.

Note: For interpretation of these terms, see section 9.

LOADING

1. Prior to loading, the shipper, or their appointed agent, should provide in writing to the master, the characteristics of the cargo and the recommended safe handling procedures for loading and transport of the cargo. As a minimum, the cargo's contract specifications for moisture content, sulphur content and size should be stated.

2. It is recommended that briquettes should be stored for 7 days prior to loading. This substantially reduces the risk of spontaneous combustion in subsequent transport, storage and handling.

3. Before loading briquettes the master should ensure the following:

3.1 weather deck enclosures to the cargo space should be inspected to ensure their integrity. Such closures should be closed and sealed before loading is commenced;

3.2 all electrical cables and components situated in cargo spaces and adjacent spaces should be free from defects. Such cables and electrical components should be safe to use in a flammable and/or dusty atmosphere or positively isolated;

4. Smoking and the use of naked flames should not be permitted in the cargo areas and adjacent spaces and appropriate warning notices should be posted in conspicuous places. Burning, cutting, chipping, welding or other sources of ignition should not be permitted in the vicinity of cargo spaces or in other adjacent spaces.

5. Briquettes should not be dropped more than one metre during loading to minimise the production of dust and fines.

6. Individual cargo spaces should be loaded without interruption where possible. Hot spots can be expected to develop in a hold that has been kept open for more than six days (or less in weather over 30°C).

7. Prior to departure, the Master should be satisfied that the surface of the material has been trimmed reasonably level to the boundaries of the cargo space to avoid the formation of gas pockets and to prevent air from permeating the body of the briquettes. Casing leading into the cargo space should be adequately sealed. The shipper should ensure that the Master receives the necessary cooperation from the loading terminal see also section 5.

8. Individual cargo spaces should be closed and sealed as soon as possible after each has been loaded. The hatch covers can also be additionally sealed with a suitable sealing tape.

PRECAUTIONS

1. The ship should be suitably fitted and carry on board appropriate instruments for measuring the following without requiring entry into the cargo space:

1.1 concentration of methane in the atmosphere above the cargo and opening cargo space enclosures;

1.2 concentration of oxygen in the atmosphere above the cargo;

1.3 concentration of carbon monoxide in the atmosphere above the cargo; and

1.4 pH value of cargo hold bilge samples.

These instruments should be regularly serviced and calibrated. Ship personnel should be trained in the use of such instruments.

2. It is recommended that means be provided for monitoring the temperature of the cargo in the range of 0°C to 100°C. Such arrangements should enable the temperature of the briquette cargo to be measured during the voyage without requiring entry into the cargo space.

CARRIAGE

1. The master should ensure, as far as possible, that any gases which may be emitted from the cargo do not accumulate in adjacent enclosed spaces, e.g. store-rooms, carpenter's shop, passage ways, tunnels, etc. Such spaces should be adequately ventilated and regularly monitored for methane, oxygen and carbon monoxide.

2. Under no circumstances should the hatches be opened or the hold ventilated or entered during the voyage.

3. The atmosphere in the space above the cargo in each cargo space should be regularly monitored for the presence of methane, oxygen and carbon monoxide.

4. The frequency of the monitoring should depend upon the information provided by the shipper and the information obtained through the analysis of the atmosphere in the cargo space. The readings should be recorded at least daily and as close as practical to the same time of day. The shipper may request more frequent readings, particularly if there is evidence of significant self-heating during the voyage.

5. The oxygen level in the hold will fall from an initial 21% over a period of days to stabilize at levels of the order of 6 - 15% in a sealed hold. If the oxygen level does not fall below 20%, or rapidly increases after an initial fall, it is possible that the hold is inadequately sealed and is at risk of spontaneous combustion.

6. Carbon monoxide levels will build up to concentrations which fluctuate in the 200-2000 parts per million (ppm) range in a safe, well sealed hold. A rapid increase of approximately 1000 ppm in carbon monoxide levels in a brown coal briquette cargo over a 24 hour period is a possible indicator of spontaneous combustion, particularly if accompanied by an increase in methane levels.

7. The methane composition in briquette cargo is normally low, less than 5 ppm and does not constitute a hazard. However, a sudden and continuing rise in methane levels, to concentrations above 10 ppm, is an indicator of the occurrence of spontaneous combustion in the hold.

8. The temperature in a brown coal briquette cargo in a well sealed hold normally remains at 5-10°C above sea water temperature, the increase being due to normal diurnal breathing of small quantities of air into the hold. Checking of the hold seals to minimise air leakage is essential. A rapid increase in temperature of approximately 20°C over 24 hours is evidence of spontaneous combustion.

9. Regular hold bilge testing should be systematically carried out. If the pH monitoring indicates that a corrosion risk exists, the master should ensure that all bilges are kept dry during the voyage in order to avoid possible accumulation of acids on tank tops and in the bilge system.

10. If the behaviour of the cargo during the voyage differs from that specified in the cargo declaration, the master should report such differences to the shipper. Such reports will enable the shipper to maintain records on the behaviour of the brown coal briquette cargoes, so that the information being provided to the master can be reviewed in the light of the transport experience.

11. If the ship's master is concerned that the cargo is showing any signs of self-heating or spontaneous combustion, such as an increase in the concentration of methane, carbon monoxide or oxygen or an increase in temperature, as described above, the following actions should be taken:

11.1 The ship's agent at the loading port, and the person designated under the International Safety Management Code (ISM Code) who is responsible for the safety aspects of the ship's operation, should be advised immediately.

11.2 The ship personnel should immediately check if the hatches have been opened or the seals broken. If this is the case, they should immediately be closed and the cargo space resealed.

11.3 Personnel should not enter the cargo space and the hatches should not be opened, unless expressly advised by the ship's agent or if the master considers access is critical to the safety of the ship or safety of life. The cargo space must be re-sealed immediately after the personnel vacate the cargo space.

12. The frequency of monitoring the gas composition and temperature of the cargo should be increased.

13. As soon as possible, the following information should be sent to the ship's owner or agent at the loading port to obtain expert advice:

13.1 the number of holds involved;

13.2 monitoring results of the carbon monoxide, methane and oxygen concentrations;

13.3 if available, temperature of the cargo, location and method used to obtain results;

13.4 the time the gas analyses were taken (monitoring routine);

13.5 the quantity of briquettes in the hold(s) involved;

13.6 the description of the cargo as per the shippers declaration, and any special precautions indicated on the declaration;

13.7 the date of loading, and Estimated Time of Arrival (ETA) at the intended discharge port (which should be specified); and

13.8 any other comments or observations the ship's master may consider relevant.

DISCHARGE

Prior to, and during discharge:

1. Cargo spaces are to be opened immediately prior to the commencement of discharge of that space. The cargo can be sprayed with a fine water spray to reduce dust.

2. Personnel are not to enter the cargo space without having tested the atmosphere above the cargo. If the atmosphere contains oxygen levels below 21%, self-contained breathing apparatus is to be worn. Carbon dioxide and carbon monoxide gas levels should also be tested. The recommended Threshold Limit Value (TLV) for carbon monoxide is 50 ppm.

3. During discharge, attention should be paid to the cargo for signs of hot spots (i.e. steaming). If a hot spot is detected, the area is to be sprayed with fine water spray and the hot spot removed immediately to prevent spreading. The hot spot material is to be spread out on the wharf away from the remainder of the cargo.

4. If the discharge is interrupted for more than eight hours, the hatch covers and all other ventilation should be closed.

PROCEDURES FOR GAS MONITORING OF BROWN COAL BRIQUETTE CARGOES

1 Observations

Carbon monoxide monitoring, when conducted in accordance with the following recommendations, will provide a reliable early indication of self-heating within a brown coal briquette cargo. This allows preventive action to be considered without delay. A sudden rapid rise in carbon monoxide detected within a hold, particularly if accompanied by an increase in methane levels, is a conclusive indication that self-heating is taking place.

All vessels engaged in the carriage of brown coal briquettes should carry on board an instrument for measuring methane, oxygen and carbon monoxide gas concentrations, so that the atmosphere within the cargo space may be monitored. This instrument should be regularly serviced and calibrated in accordance with the manufacturer's instructions. When properly maintained and operated, this instrument will provide reliable data about the atmosphere within the cargo space. Care needs to be exercised in interpreting methane measurements carried out in the low oxygen concentrations often found in unventilated cargo holds. The catalytic sensors normally used for the detection of methane rely on the presence of sufficient oxygen for accurate measurement. This phenomenon does not affect the measurement of carbon monoxide, or measurement of methane by infrared sensor. Further guidance may be obtained from the instrument manufacturer.

2 Sampling and measurement procedure

2. 1 Equipment

An instrument is required which is capable of measuring methane, oxygen and carbon monoxide concentrations. The instrument should be fitted with an aspirator, flexible connection and a length of tubing to enable a representative sample to be obtained from within the square of the hatch. Stainless steel tubing approximately 0.5 m in length and 6 mm nominal internal diameter with an integral stainless steel threaded collar is preferred. The collar is necessary to provide an adequate seal at the sampling point.

A suitable filter should be used to protect the instrument against the ingress of moisture as recommended by the manufacturer. The presence of even a small amount of water will compromise the accuracy of the measurement.

2.2 Siting of sampling points

In order to obtain meaningful information about the behaviour of coal in a hold, gas measurements should be made via one sample point per hold. To ensure flexibility of measurement in adverse weather, however, two sample points should be provided per hold, one on the port side and one on the starboard side of the hatch cover (refer to diagram of gas sampling point). Measurement from either of these locations is satisfactory.

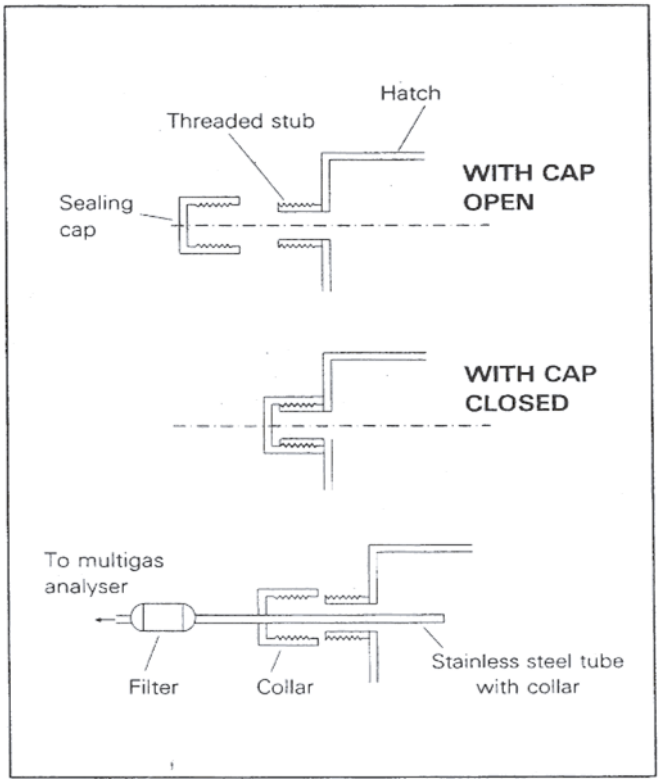

Diagram of gas sampling point

Each sample point should comprise a hole of diameter approximately 12 mm positioned as near to the top of the hatch coaming as possible. It should be sealed with a screw cap to prevent ingress of water and air. It is essential this cap be securely replaced after each measurement to maintain a tight seal.

The provision of any sample point should not compromise the seaworthiness of the vessel.

2.3 Measurement

Ensure that the instrument is calibrated and working properly in accordance with the manufacturer's instructions. Remove the sealing cap, insert the stainless steel tube into the sampling point and tighten the integral cap to ensure an adequate seal. Connect the instrument to the sampling tube. Draw a sample of the hold atmosphere through the tube, using the aspirator, until steady readings are obtained. Log the results on a form which records cargo hold, date and time for each measurement.

Brown coal briquettes are carried in sealed and unventilated holds. Under these conditions, background levels of carbon monoxide of the order of several hundred to 2000 ppm can develop in a stable cargo. Normally daily readings are sufficient. However, if a rapid rise occurs in carbon monoxide levels (say 500 ppm increase between readings), particularly if accompanied by a rise in methane levels over 10 ppm, the frequency of readings should increased. The owners of the vessel should be immediately notified, as a self-heating condition may be developing.

CALCIUM NITRATE UN 1454

DESCRIPTION
White deliquescent solid soluble in water. The provisions of this Code should not apply to the commercial grades of calcium nitrate fertilizers consisting mainly of a double salt (calcium nitrate and ammonium nitrate) and containing not more than 10% ammonium nitrate and at least 12% water of crystallization.

CHARACTERISTICS

ANGLE OF REPOSE	BULK DENSITY (kg/m^3)	STOWAGE FACTOR (m^3/t)
Not applicable	893 - 1099	0.91 - 1.12
SIZE	**CLASS**	**GROUP**
Not applicable	5.1	B

HAZARD
Non-combustible materials. If involved in a fire, will greatly intensify the burning of combustible materials. Although non-combustible, mixtures with combustible material are easily ignited and may burn fiercely.

STOWAGE & SEGREGATION
"Separated from" foodstuffs.

HOLD CLEANLINESS
Clean and dry without any residue of previous cargoes.

WEATHER PRECAUTIONS
Do not handle cargo during precipitation, keep dry, close hatches that are not being worked.

LOADING
Make sure bilges are clean and covered to prevent cargo ingress. Avoid contact with combustible materials. Trim in accordance with the cargo information required by SOLAS VI/2. If any doubt exists, trim reasonably level to boundaries of the cargo space so as to minimize the risk of shifting and to ensure that adequate stability will be maintained during the voyage.

PRECAUTIONS
Harmful if swallowed.

VENTILATION
Do not ventilate.

CARRIAGE
No special requirements.

DISCHARGE
Calcium nitrate is hygroscopic and will cake if wet. If cargo has hardened trimming may be necessary to avoid formation of overhanging faces.

CLEAN UP
No special requirements.

EMERGENCY PROCEDURES

SPECIAL EMERGENCY EQUIPMENT TO BE CARRIED

Protective clothing (gloves, boots, coveralls, headgear). Self-contained breathing apparatus. Spray nozzles.

EMERGENCY PROCEDURES

Wear protective clothing and self-contained breathing apparatus.

EMERGENCY ACTION IN THE EVENT OF FIRE

Use copious quantities of water, which is best applied in the form of a spray to avoid disturbing the surface of the material. The material may fuse or melt, in which condition application of water may result in extensive scattering of the molten materials. Exclusion of air or the use of CO_2 will not control the fire. Due consideration should be given to the stability of the ship due to accumulated water.

MEDICAL FIRST AID

Refer to the Medical First Aid Guide (MFAG) as amended.

CALCIUM NITRATE FERTILIZER

DESCRIPTION
Granules mainly of a double salt (calcium nitrate and ammonium nitrate) and containing not more than 15.5% total nitrogen and at least 12% water. Refer to the schedule for Calcium Nitrate UN No:1454 where the total nitrogen content exceeds 15.5%, or where the water content is less than 12%.

CHARACTERISTICS

ANGLE OF REPOSE	BULK DENSITY (kg/m^3)	STOWAGE FACTOR (m^3/t)
34°	1053 - 1111	0.90 - 0.95
SIZE	**CLASS**	**GROUP**
1 mm - 4 mm	Not applicable	C

HAZARD
No special hazards.

This cargo is non-combustible or has a low fire-risk.

STOWAGE & SEGREGATION
"Separated from" foodstuffs.

HOLD CLEANLINESS
Clean and dry without any residue of previous cargoes.

WEATHER PRECAUTIONS
Do not handle cargo during precipitation; keep dry, close hatches that are not being worked.

LOADING
Trim in accordance with cargo information required by SOLAS VI/2. If doubt exists, trim reasonably level to the boundaries of the cargo space so as to minimize the risk of shifting and to ensure that adequate stability will be maintained during the voyage.

PRECAUTIONS
No special requirements.

VENTILATION
Do not ventilate.

CARRIAGE
No special requirements.

DISCHARGE
No special requirements.

CLEAN UP
No special requirements.

CARBORUNDUM

DESCRIPTION
A hard black crystalline compound of carbon and silicon. Odourless. No moisture content.

CHARACTERISTICS

ANGLE OF REPOSE	BULK DENSITY (kg/m^3)	STOWAGE FACTOR (m^3/t)
Not applicable	1786	0.56
SIZE	**CLASS**	**GROUP**
75% lumps: 203.2 mm 25% lumps: 12.7 mm	Not applicable	C

HAZARD
Slightly toxic by inhalation.

This cargo is non-combustible or has a low fire-risk.

STOWAGE & SEGREGATION
No special requirements.

HOLD CLEANLINESS
No special requirements.

WEATHER PRECAUTIONS
No special requirements.

LOADING
Trim in accordance with cargo information required by SOLAS VI/2. If doubt exists, trim reasonably level to the boundaries of the cargo space so as to minimize the risk of shifting and to ensure that adequate stability will be maintained during the voyage.

PRECAUTIONS
Protect machinery, accommodation and equipment from dust. Personnel involved in cargo handling should wear protective clothing and dust filter masks.

VENTILATION
Ventilation not required.

CARRIAGE
No special requirements.

DISCHARGE
No special requirements.

CLEAN UP
No special requirements.

CASTOR BEANS UN 2969

DESCRIPTION
The beans from which castor oil is obtained.

CHARACTERISTICS

ANGLE OF REPOSE	BULK DENSITY (kg/m^3)	STOWAGE FACTOR (m^3/t)
Not applicable	Not applicable	Not applicable
SIZE	**CLASS**	**GROUP**
Not applicable	9	B

HAZARD
Contain a powerful allergen which, by inhalation of dust or by skin contact with crushed bean products, can give rise to severe irritation of the skin, eyes, and mucous membranes in some persons. They are also toxic by ingestion.

STOWAGE & SEGREGATION
"Separated from" foodstuffs and oxidizing materials (goods in packages and solid bulk materials).

HOLD CLEANLINESS
No special requirements.

WEATHER PRECAUTIONS
No special requirements.

LOADING
Trim in accordance with cargo information required by SOLAS VI/2. If doubt exists, trim reasonably level to the boundaries of the cargo space so as to minimize the risk of shifting and to ensure that adequate stability will be maintained during the voyage.

PRECAUTIONS
Prevent dust entering living quarters and working areas. Castor meal, castor pomace and castor flakes should **not** be carried in bulk. Persons involved in handling should wear coveralls, gloves, dust masks and goggles.

VENTILATION
Surface ventilation required.

CARRIAGE
No special requirements.

DISCHARGE
Maintain personnel protection precautions.

CLEAN UP
Holds must be thoroughly cleaned and washed out to remove all traces after cargo discharge.

EMERGENCY PROCEDURES

SPECIAL EMERGENCY EQUIPMENT TO BE CARRIED Protective clothing (gloves, boots, coveralls, headgear). Self-contained breathing apparatus. Spray nozzles.
EMERGENCY PROCEDURES Wear protective clothing and self-contained breathing apparatus. **EMERGENCY ACTION IN THE EVENT OF FIRE** Batten down. Use ship's fixed fire-fighting installation if available. Exclusion of air may be sufficient to control fire. **MEDICAL FIRST AID** Refer to the Medical First Aid Guide (MFAG) as amended.

CEMENT

DESCRIPTION

Cement is a finely ground powder which becomes almost fluid in nature when aerated or significantly disturbed thereby creating a very minimal angle of repose. After loading is completed de-aeration occurs almost immediately and the product settles into a stable mass. Cement dust can be a major concern during loading and discharge if the vessel is not specially designed as a cement carrier or shore equipment is not fitted with special dust control equipment.

CHARACTERISTICS

ANGLE OF REPOSE	BULK DENSITY (kg/m^3)	STOWAGE FACTOR (m^3/t)
Not applicable	1000 -1493	0.67 - 1.00
SIZE	**CLASS**	**GROUP**
Up to 0.1 mm	Not applicable	C

HAZARD

It may shift when aerated.
This cargo is non-combustible or has a low fire-risk.

STOWAGE & SEGREGATION

No special requirements.

HOLD CLEANLINESS

Clean and dry without any residue of previous cargoes.

WEATHER PRECAUTIONS

Do not handle cargo during precipitation, keep dry, close hatches that are not being worked.

LOADING

Keep the ship upright, and considering the fluid nature of cement prior to settlement, care should be taken to ensure the cargo is trimmed reasonably level to the boundaries of the cargo space. Both the specific gravity and angle of repose of cement are dependent on the amount of air in the cargo. Cement contracts about 12% from an aerated to a non-aerated state. Consideration should be given to ensure that cement has had sufficient time to settle before sailing, and is stable before the ship sails especially when loading rates are high.

After settling, shifting should not occur unless the angle of the surface with the horizontal plane exceeds 30 degrees.

PRECAUTIONS

Ensure hold bilge wells are dry, taped up and made sift proof. Protect machinery, accommodation and equipment from dust ingress. Persons involved in loading should wear protective clothing, goggles and dust filter masks, if not a closed circuit loading.

VENTILATION
Do not ventilate.

CARRIAGE
Hatches should be sealed if necessary. Shut all vents and access ways. DO NOT pump bilges in cement holds without taking special precautions, because wet cement will make bilge systems inoperable.

DISCHARGE
If using grabs and not discharging in a closed circuit system ensure the vessel is again protected against dust ingress and personnel are wearing the appropriate protective clothing, goggles and face masks.

CLEAN UP
Before wash down begins, holds, decks, houses, machinery etc. should be thoroughly swept and all residues removed. Pay particular attention to bilge wells and framework in holds.

Bilge pumps should not be used to pump hatches because cement will make the bilge systems inoperative.

CEMENT CLINKERS

DESCRIPTION
Cement is formed by burning limestone with clay. This burning produces rough cinder lumps that are later crushed to a fine powder to produce cement. The rough cinder lumps are called clinker and are shipped in this form to avoid the difficulties of carrying cement powder.

CHARACTERISTICS

ANGLE OF REPOSE	BULK DENSITY (kg/m^3)	STOWAGE FACTOR (m^3/t)
Not applicable	1190 - 1639	0.61 - 0.84
SIZE	**CLASS**	**GROUP**
0 mm - 40 mm	Not applicable	C

HAZARD
No special hazards.

This cargo is non-combustible or has a low fire-risk.

STOWAGE & SEGREGATION
No special requirements.

HOLD CLEANLINESS
Clean and dry without any residue of previous cargoes.

WEATHER PRECAUTIONS
Do not handle cargo during precipitation; keep dry, close hatches that are not being worked.

LOADING
Trim in accordance with cargo information required by SOLAS VI/2. If doubt exists, trim reasonably level to the boundaries of the cargo space so as to minimize the risk of shifting and to ensure that adequate stability will be maintained during the voyage.

PRECAUTIONS
Make sure bilge wells are dry; cover with burlap.

Protect machinery, accommodation and equipment from dust ingress.

Persons involved in loading should wear protective clothing; goggles and dust filter masks.

VENTILATION
Do not ventilate.

CARRIAGE
Hatches should be sealed. Shut all vents and access ways. DO NOT pump bilges in cement holds without taking special precautions, because wet cement will make bilge systems inoperable.

DISCHARGE
Make sure that machinery, accommodation and equipment is protected from dust. Maintain personnel protection precaution.

CLEAN UP
Before wash down begins, holds, decks, houses etc. should be thoroughly swept and all residues removed.

CHAMOTTE

DESCRIPTION
Burned clay. Grey. Shipped in the form of fine crushed stone. Used by zinc smelters and in manufacture of firebrick (road metal). Dusty.

CHARACTERISTICS

ANGLE OF REPOSE	BULK DENSITY (kg/m^3)	STOWAGE FACTOR (m^3/t)
Not applicable	667	1.50
SIZE	**CLASS**	**GROUP**
Up to 10 mm	Not applicable	C

HAZARD
No special hazards.

This cargo is non-combustible or has a low fire-risk.

STOWAGE & SEGREGATION
No special requirements.

HOLD CLEANLINESS
No special requirements.

WEATHER PRECAUTIONS
No special requirements.

LOADING
Trim in accordance with cargo information required by SOLAS VI/2. If doubt exists, trim reasonably level to the boundaries of the cargo space so as to minimize the risk of shifting and to ensure that adequate stability will be maintained during the voyage.

PRECAUTIONS
Protect machinery, accommodation and equipment from dust.

VENTILATION
Ventilation not required.

CARRIAGE
No special requirements.

DISCHARGE
No special requirements.

CLEAN UP
No special requirements.

CHARCOAL

DESCRIPTION
Wood burnt at a high temperature with as little exposure to air as possible. Very dusty, light cargo. Can absorb moisture to about 18-70% of it weight. Black powder or granules.

CHARACTERISTICS

ANGLE OF REPOSE	BULK DENSITY (kg/m^3)	STOWAGE FACTOR (m^3/t)
Not applicable	199	5.02
SIZE	**CLASS**	**GROUP**
	MHB	B

HAZARD
May ignite spontaneously. Contact with water may cause self-heating. Liable to cause oxygen depletion in the cargo space. Hot charcoal screenings in excess of 55°C should not be loaded.

STOWAGE & SEGREGATION
Segregation as required for Class 4.1 materials. "Separated from" oily materials.

HOLD CLEANLINESS
Clean and dry.

WEATHER PRECAUTIONS
Do not handle cargo during precipitation; keep dry, close hatches that are not being worked.

LOADING
Trim in accordance with cargo information required by SOLAS VI/2. If doubt exists, trim reasonably level to the boundaries of the cargo space so as to minimize the risk of shifting and to ensure adequate stability will be maintained during the voyage.

PRECAUTIONS
Transport of charcoal in Class 4.2 is **not** permitted in bulk.
Charcoal screenings should be exposed to the weather for not less than 13 days prior to shipment.

Prior to loading, the manufacturer or shipper should give the Master a Certificate stating that the cargo is not class 4.2 based on tests carried out in accordance with section 6 of Appendix 2. The certificate should also state that Charcoal screenings have been weathered for not less than 13 days.

The moisture content of charcoal screenings should not be more than 10%.

Protect machinery, accommodation and bilge wells from dust.

VENTILATION
Ventilation not required.

CARRIAGE
No special requirements.

DISCHARGE
Protect machinery, accommodation and equipment from dust.

CLEAN UP
No special requirements.

EMERGENCY PROCEDURES

SPECIAL EMERGENCY EQUIPMENT TO BE CARRIED Nil
EMERGENCY PROCEDURES Nil **EMERGENCY ACTION IN THE EVENT OF FIRE** Batten down; use ship's fixed fire-fighting installation if fitted. Exclusion of air may be sufficient to control fire. **MEDICAL FIRST AID** Refer to the Medical First Aid Guide (MFAG) as amended.

CHROMITE ORE

DESCRIPTION
Concentrates or lumpy, dark grey in colour.

CHARACTERISTICS

ANGLE OF REPOSE	BULK DENSITY (kg/m^3)	STOWAGE FACTOR (m^3/t)
Not applicable	2222 - 3030	0.33 - 0.45
SIZE	**CLASS**	**GROUP**
Up to 254 mm	Not applicable	C

HAZARD
Toxic by dust inhalation.
This cargo is non-combustible or has a low fire-risk.

STOWAGE & SEGREGATION
No special requirements.

HOLD CLEANLINESS
No special requirements.

WEATHER PRECAUTIONS
No special requirements.

LOADING
Trim in accordance with cargo information required by SOLAS VI/2. If doubt exists, trim reasonably level to the boundaries of the cargo space so as to minimize the risk of shifting and to ensure that adequate stability will be maintained during the voyage.

As the density of the cargo is extremely high, care should be taken to ensure that the cargo is evenly spread across the tank top to equalize the weight distribution. Do not pile the cargo in the centre of the hatch during loading.

PRECAUTIONS
Persons involved in loading or unloading should wear dust masks when needed.

VENTILATION
Ventilation not required.

CARRIAGE
No special requirements.

DISCHARGE
No special requirements.

CLEAN UP
No special requirements.

CHROME PELLETS

DESCRIPTION
Pellets. Moisture: up to 2% maximum.

CHARACTERISTICS

ANGLE OF REPOSE	BULK DENSITY (kg/m^3)	STOWAGE FACTOR (m^3/t)
Not applicable	1667	0.6
SIZE	**CLASS**	**GROUP**
8-25 mm	Not applicable	C

HAZARD
No special hazards.

This cargo is non-combustible or has a low fire-risk.

STOWAGE & SEGREGATION
No special requirements.

HOLD CLEANLINESS
No special requirements.

WEATHER PRECAUTIONS
No special requirements.

LOADING
Trim in accordance with cargo information required by SOLAS VI/2. If doubt exists, trim reasonably level to the boundaries of the cargo space so as to minimize the risk of shifting and to ensure that adequate stability will be maintained during the voyage.

PRECAUTIONS
No special requirements.

VENTILATION
Ventilation not required.

CARRIAGE
No special requirements.

DISCHARGE
No special requirements.

CLEAN UP
No special requirements.

CLAY

DESCRIPTION
Clay is usually light to dark grey and comprises 10% soft lumps and 90% soft grains. The material is usually moist but not wet to the touch. Moisture is up to 25%.

CHARACTERISTICS

ANGLE OF REPOSE	BULK DENSITY (kg/m^3)	STOWAGE FACTOR (m^3/t)
Not applicable	746 - 1515	0.66 - 1.34
SIZE	**CLASS**	**GROUP**
Up to 150 mm	Not applicable	C

HAZARD
No special hazards.

This cargo is non-combustible or has a low fire-risk.

STOWAGE & SEGREGATION
No special requirements.

HOLD CLEANLINESS
No special requirements.

WEATHER PRECAUTIONS
Do not handle cargo during precipitation; keep dry, close hatches that are not being worked.

LOADING
Trim in accordance with cargo information required by SOLAS VI/2. If doubt exists, trim reasonably level to the boundaries of the cargo space so as to minimize the risk of shifting and to ensure that adequate stability will be maintained during the voyage.

PRECAUTIONS
The moisture content should be kept as low as possible otherwise the material will become glutinous and thus extremely difficult to handle.

VENTILATION
Ventilation not required.

CARRIAGE
No special requirements.

DISCHARGE
No special requirements.

CLEAN UP
Clean bilge wells before washing out.

COAL
(See also the Appendix to this schedule)

DESCRIPTION
Coal (bituminous and anthracite) is a natural, solid, combustible material consisting of amorphous carbon and hydrocarbons.

CHARACTERISTICS

ANGLE OF REPOSE	BULK DENSITY (kg/m^3)	STOWAGE FACTOR (m^3/t)
Not applicable	654 - 1266	0.79 - 1.53
SIZE	**CLASS**	**GROUP**
Up to 50 mm	MHB	B (and A)

HAZARDS
Coal may create flammable atmospheres, may heat spontaneously, may deplete the oxygen concentration, may corrode metal structures. Can liquefy if predominantly fine 75% less than 5 mm coal.

This cargo has a low fire-risk.

STOWAGE & SEGREGATION
Refer to the appendix to this schedule.

HOLD CLEANLINESS
Clean and dry without any residue of previous cargoes.

WEATHER PRECAUTIONS
Hatches should be closed in heavy rain if the moisture content of the cargo is sufficiently close to the TML that the rain could increase the moisture content beyond the TML. Further, the moisture content should be measured again if it is close to the TML. This does not apply to ships specially constructed or fitted to carry cargoes with a moisture content exceeding the TML.

LOADING
Trim in accordance with cargo information required by SOLAS VI/2. If doubt exists, trim reasonably level to the boundaries of the cargo space so as to minimize the risk of shifting and to ensure that adequate stability will be maintained during the voyage.

Without reasonable trimming vertical cracks into the body of the coal may form permitting oxygen circulation and possible self-heating.

PRECAUTIONS
Make sure bilge wells are clean and covered with burlap. Refer to the Appendix to this schedule.

VENTILATION
Surface ventilation required. Refer to Special Precautions in the appendix to this schedule.

CARRIAGE
Refer to the appendix to this schedule.

DISCHARGE
No special requirements.

CLEAN UP
No special requirements.

EMERGENCY PROCEDURES

SPECIAL EMERGENCY EQUIPMENT TO BE CARRIED Nil
EMERGENCY PROCEDURES Nil **EMERGENCY ACTION IN THE EVENT OF FIRE** Batten down. Exclusion of air may be sufficient to control the fire. **Do not use water.** Seek expert advice and consider heading to the nearest port. **MEDICAL FIRST AID** Refer to the Medical First Aid Guide (MFAG) as amended.

REMARKS
The use of CO_2 or inert gas, if available, should be withheld until fire is apparent

APPENDIX

COAL

Properties and characteristics

1. Coals may emit methane, a flammable gas. A methane/air mixture containing between 5% and 16% methane constitutes an explosive atmosphere which can be ignited by sparks or naked flame, e.g. electrical or frictional sparks, a match or lighted cigarette. Methane is lighter than air and may, therefore, accumulate in the upper region of the cargo space or other enclosed spaces. If the cargo space boundaries are not tight, methane can seep through into spaces adjacent to the cargo space.

2. Coals may be subject to oxidation, leading to depletion of oxygen and an increase in carbon dioxide concentrations in the cargo space (see Appendix 7 of this Code.)

3. Some coals may be liable to self-heating that could lead to spontaneous combustion in the cargo space. Flammable and toxic gases, including carbon monoxide, may be produced. Carbon monoxide is an odourless gas, slightly lighter than air, and has flammable limits in air of 12% to 75% by volume. It is toxic by inhalation; with an affinity for blood haemoglobin over 200 time that of oxygen.

4. Some coals may be liable to react with water and produce acids which may cause corrosion. Flammable and toxic gases, including hydrogen, may be produced. Hydrogen is an odourless gas, much lighter than air, and has flammable limits in air of 4% to 75% by volume.

Segregation and stowage requirements

1. Boundaries of cargo spaces where materials are carried should be resistant to fire and liquids.

2. Coals should be "separated from" goods of classes 1 (Division 1.4), 2, 3, 4 and 5 in packaged form (see IMDG Code) and "separated from" solid bulk materials of classes 4 and 5.1.

3. Stowage of goods of class 5.1 in packaged form or solid bulk materials of class 5.1 above or below a cargo should be prohibited.

4. The master should ensure that the coal cargo is not stowed adjacent to hot areas.

5. Coals should be "separated longitudinally by an intervening complete compartment or hold from "goods of class 1 other than Division 1.4.

General requirements for all coals

1. Prior to loading, the shipper or his appointed agent should provide in writing to the master the characteristics of the cargo and the recommended safe handling procedures for loading and transport of the cargo. As a minimum, the cargo's contract specifications for moisture content, sulphur content and size should be stated, and especially whether the cargo may be liable to emit methane or self-heat.

2. The master should be satisfied that he has received such information prior to accepting the cargo. If the shipper has advised that the cargo is liable to emit methane or self-heat, the master should additionally refer to the "Special precautions".

3. Before and during loading, and while the material remains on board, the master should observe the following:

3.1 All cargo spaces and bilge wells should be clean and dry. Any residue of waste material or previous cargo should be removed, including removable cargo battens, before loading.

3.2 All electrical cables and components situated in cargo spaces and adjacent spaces should be free from defects. Such cables and electrical components should be safe for use in an explosive atmosphere or positively isolated.

3.3 The ship should be suitably fitted and carry on board appropriate instruments for measuring the following without requiring entry in the cargo space:

3.3.1 concentration of methane in the atmosphere;

3.3.2 concentration of oxygen in the atmosphere;

3.3.3 concentration of carbon monoxide in the atmosphere; and

3.3.4 pH value of cargo hold bilge samples.

4. These instruments should be regularly serviced and calibrated. Ship personnel should be trained in the use of such instruments. Details of gas measurement procedures are given at the end of this appendix.

5. It is recommended that means be provided for measuring the temperature of the cargo in the range 0°C to 100°C. Such arrangements should enable the temperature of the coal to be measured while being loaded and during voyage without requiring entry into the cargo space.

6. The ship should carry on board the self-contained breathing apparatus required by SOLAS regulation II-2/10.10. The self-contained breathing apparatus should be worn only by personnel trained in its use (see also Appendix 7 of this Code).

7. Smoking and the use of naked flames should not be permitted in the cargo areas and adjacent spaces and appropriate warning notices should be posted in conspicuous places. Burning, cutting, chipping, welding or other sources of ignition should not be permitted in the vicinity of cargo spaces or in other adjacent spaces, unless the space has been properly ventilated and the methane gas measurements indicate it is safe to do so.

8. Prior to departure, the master should be satisfied that the surface of the material has been trimmed reasonably level to the boundaries of the cargo space to avoid the formation of gas pockets and to prevent air from permeating the body of the coal. Casings leading into the cargo space should be adequately sealed. The shipper should ensure that the master receives the necessary co-operation from the loading terminal.

9. The atmosphere in the space above the cargo in each space should be regularly monitored for the presence of methane, oxygen and carbon monoxide. Details of gas monitoring procedures are given at the end of this appendix. Records of these readings should be maintained. The frequency of the testing should depend upon the information provided by the shipper and the information obtained through the analysis of the atmosphere in the cargo space.

10. Unless expressly directed otherwise, all holds should be surface ventilated for the first 24 hours after departure from the loading port. During this period, one measurement should be taken from one sample point per hold.

11. If after 24 hours the methane concentrations are at an acceptably low level, the ventilators should be closed. If not, they should remain open until acceptably low levels are obtained. In either event, measurements should be continued on a daily basis.

12. If significant concentrations of methane subsequently occur in unventilated holds, the appropriate special precautions as described in section 2.2.1 should apply.

13. The master should ensure, as far as possible, that any gases which may be emitted from the materials do not accumulate in adjacent enclosed spaces.

14. The master should ensure that enclosed working spaces, e.g. storerooms, carpenter's shop, passageways, tunnels, etc. are regularly monitored for the presence of methane, oxygen and carbon monoxide. Such spaces should be adequately ventilated.

15. Regular hold bilge testing should be systematically carried out. If the pH monitoring indicates that a corrosion risk exists, the master should ensure that all bilges are kept dry during the voyage in order to avoid possible accumulation of acids on tank tops and in the bilge system.

16. If the behaviour of the cargo during the voyage differs from that specified in the cargo declaration, the master should report such differences to the shipper. Such reports will enable the shipper to maintain records on the behaviour of the coal cargoes, so that the information provided to the master can be reviewed in the light of transport experience.

17. The Administration may approve alternative requirements to those recommended in this schedule.

Special Precautions

1 Coals emitting methane

If the shipper has advised that the cargo is liable to emit methane or analysis of the atmosphere in the cargo space indicates the presence of methane in excess of 20% of the Lower Explosion Limit (LEL), the following additional precautions should be taken:

.1 Adequate surface ventilation should be maintained. On no account should air be directed into the body of the coal as air could promote self-heating.

.2 Care should be taken to vent any accumulated gases prior to removal of the hatch covers or other openings for any reason, including unloading. Cargo hatches and other openings should be opened carefully to avoid creating sparks. Smoking and the use of naked flame should be prohibited.

.3 Personnel should not be permitted to enter the cargo space or enclosed adjacent spaces unless the space has been ventilated and the atmosphere tested and found to be gas-free and to have sufficient oxygen to support life. If this is not possible, emergency entry into the space should be undertaken only by trained personnel wearing self-contained breathing apparatus, under the supervision of a responsible officer. In addition, special precautions to ensure that no source of ignition is carried into the space should be observed (see also Appendix 7 of the Code).

.4 The master should ensure that enclosed working spaces, e.g. storerooms, carpenter's shops, passageways, tunnels, etc. are regularly monitored for the presence of methane. Such spaces should be adequately ventilated and, in the case of mechanical ventilation, only equipment safe for use in an explosive atmosphere should be used. Testing is especially important prior to permitting personnel to enter such spaces or energising equipment within those spaces.

2 Self-heating coals

.1 If the shipper has advised that the cargo is liable to self-heat, the master should seek confirmation that the precautions intended to be taken and the procedures intended for monitoring the cargo during the voyage are adequate.

.2 If the cargo is likely to self-heat or analysis of the atmosphere in the cargo space indicates an increasing concentration of carbon monoxide, then the following additional precautions should be taken:

.2.1 The hatches should be closed immediately after completion of loading in each cargo space. The hatch covers can also be additionally sealed with a suitable sealing tape. Surface ventilation should be limited to the absolute minimum time necessary to remove methane which may have accumulated. Forced ventilation should not be used. On no account should air be directed into the body of the coal as air could promote self-heating.

.2.2 Personnel should not be allowed to enter the cargo space, unless they are wearing self-contained breathing apparatus and access is critical to safety of life and the safety of the ship (see also Appendix 7 of this Code.)

.2.3 When required by the competent authority, the carbon monoxide concentration in each cargo space should be measured at regular time intervals to detect self-heating.

.2.4 If at the time of loading, when the hatches are open, the temperature of the coal exceeds 55°C, expert advice should be obtained.

.2.5 If the carbon monoxide level is increasing steadily, a potential self-heating may be developing. The cargo space should be completely closed down and all ventilation ceased. The master should seek expert advice immediately. Water should not be used for cooling material or fighting coal cargo fires at sea, but may be used for cooling the boundaries of the cargo space.

.2.6 Information to be passed to owners. The most comprehensive record of measurements will always be the log used to record daily results. The coal cargo monitoring log for the voyage should be faxed, or the appropriate content should be telexed to the vessel's owners.

The following minimum information is essential if an accurate assessment of the situation is to be achieved:

(a) identify of the holds involved; monitoring results covering carbon monoxide, methane and oxygen concentrations;

(b) if available, temperature of coal, location and method used to obtain results;

(c) time gas sample taken (monitoring routine);

(d) time ventilators opened/closed;

(e) quantity of coal in hold(s) involved;

(f) type of coal as per shipper's declaration, and any special precautions indicated on declaration;

(g) date loaded, and ETA at intended discharge port (which should be specified); and

(h) comments or observations from the ship's master.

Procedures for gas monitoring of coal cargoes

1 Observations

Carbon monoxide monitoring, when conducted in accordance with the following recommendations, will provide a reliable early indication of self-heating within a coal cargo. This allows preventive action to be considered without delay. A steady rise in the level of carbon monoxide detected within a hold is a conclusive indication that self-heating is taking place.

All vessels engaged in the carriage of coal should carry on board an instrument for measuring methane, oxygen and carbon monoxide gas concentrations, so that the atmosphere within the cargo space may be monitored. This instrument should be regularly serviced and calibrated in accordance with the manufacturer's instructions. When properly maintained and operated, this instrument will provide reliable data about the atmosphere within the cargo space. Care needs to be exercised in interpreting methane measurements carried out in the low oxygen concentrations often found in unventilated cargo holds. The catalytic sensors normally used for the detection of methane rely on the presence of sufficient oxygen for accurate measurement. This phenomenon does not affect the measurement of carbon monoxide, or measurement of methane by infrared sensor. Further guidance may be obtained from the instrument manufacturer.

2 Sampling and measurement procedure

2.1 Equipment

An instrument is required which is capable of measuring methane, oxygen and carbon monoxide concentrations. The instrument should be fitted with an aspirator, flexible connection and a length of tubing to enable a representative sample to be obtained from within the square of the hatch. Stainless steel tubing approximately 0.5 m in length and 6 mm nominal internal diameter with an integral stainless steel threaded collar is preferred. The collar is necessary to provide an adequate seal at the sampling point.

A suitable filter should be used to protect the instrument against the ingress of moisture as recommended by the manufacturer. The presence of even a small amount of moisture will compromise the accuracy of the measurement.

2.2 Siting of sampling points

In order to obtain meaningful information about the behaviour of coal in a hold, gas measurements should be made via one sample point per hold. To ensure flexibility of measurement in adverse weather, however, two sample points should be provided per hold, one on the port side and one on the starboard side of the hatch cover. (Refer to the diagram on the next page.) Measurement from either of these locations is satisfactory.

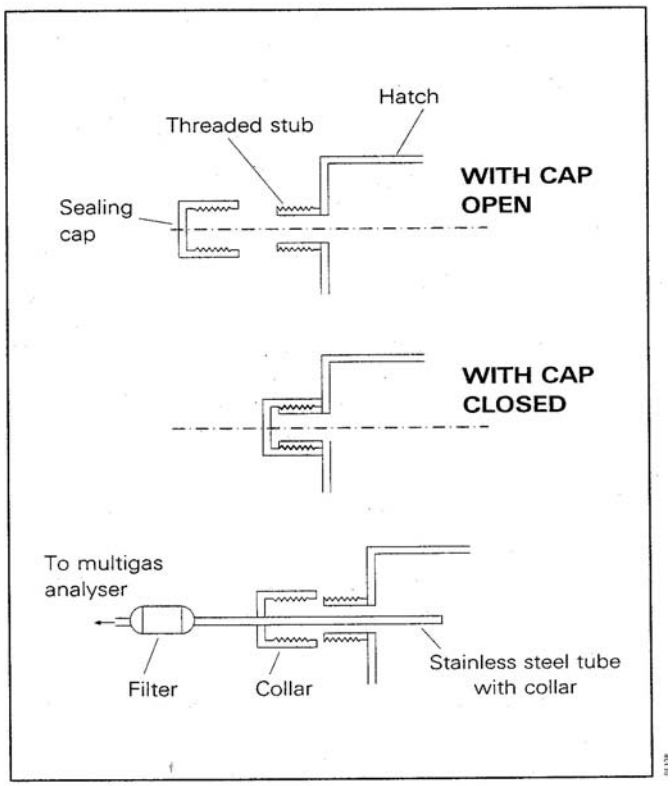

Diagram of gas sampling point

Each sample point should comprise a hole of diameter approximately 12 mm positioned as near to the top of the hatch coaming as possible. It should be sealed with a screw cap to prevent ingress of water and air. It is essential that this cap is securely replaced after each measurement to maintain a tight seal.

The provisions of any sample point should not compromise the seaworthiness of the vessel.

2.3 Measurement

Ensure that the instrument is calibrated and working properly in accordance with the manufacturer's instructions. Remove the sealing cap, insert the stainless steel tube into the sampling point and tighten the integral cap to ensure an adequate seal. Connect the instrument to the sampling tube. Draw a sample of the hold atmosphere through the tube, using the aspirator, until steady readings are obtained. Log the results on a form which records cargo hold, date and time for each measurement.

2.4 Measurement strategy

The identification of incipient self-heating from measurement of gas concentrations is more readily achieved under unventilated conditions. This is not always desirable because of the possibility of the accumulation of methane to dangerous concentrations. This is primarily, but not exclusively, a problem in the early stages of a voyage. Therefore it is recommended that holds are initially ventilated until measured methane concentrations are at an acceptably low level.

2.5 Measurement in unventilated holds

Under normal conditions one measurement per day is sufficient as a precautionary measure. However, if carbon monoxide levels are higher than 30ppm then the frequency should be increased to at least twice a day at suitably spaced intervals. Any additional results should be logged.

If the carbon monoxide level in any hold reaches 50 ppm a self-heating condition may be developing and the owners of the vessel should be notified.

2.6 Measurement in ventilated holds

If the presence of methane is such that the ventilators are required to remain open, then a different procedure should be applied to enable the onset of any incipient self-heating to be detected.

To obtain meaningful data the ventilators should be closed for a period before the measurements are taken. This period may be chosen to suit the operational requirements of the vessel, but it is recommended that it is not less than four hours. It is vital in the interests of data interpretation that the shutdown time is constant whichever time period is selected. These measurements should be taken on a daily basis. If the carbon monoxide results exhibit a steady rise over three consecutive days, or exceed 50 ppm on any day, the owners of the vessel should be notified.

COAL SLURRY

DESCRIPTION
Coal slurry is a mixture of fine particles of coal and water.

CHARACTERISTICS

ANGLE OF REPOSE	BULK DENSITY (kg/m^3)	STOWAGE FACTOR (m^3/t)
Not applicable	870 - 1020	0.98 - 1.15
SIZE	**CLASS**	**GROUP**
Under 1 mm	Not applicable	A

HAZARD
Coal slurry is liable to liquefy during sea transport. Spontaneous combustion is possible if the coal dries out but is unlikely under normal conditions.

This cargo is non-combustible or has a low fire-risk.

STOWAGE & SEGREGATION
No special requirements.

HOLD CLEANLINESS
Clean and dry without any residue of previous cargoes.

WEATHER PRECAUTIONS
Hatches should be closed in heavy rain if the moisture content of the cargo is sufficiently close to the TML that the rain could increase the moisture content beyond the TML.

LOADING
Trim in accordance with the cargo information required by SOLAS VI/2. If any doubt exists, trim reasonably level to the boundaries of the cargo space so as to minimize the risk of shifting and to ensure that adequate stability will be maintained during the voyage.

PRECAUTIONS
Determine the moisture content and the transportable moisture limit. Certificates showing the test results should be given to the master to receive correct attention. Bilge wells should be clean, dry and covered with burlap to prevent ingress of cargo. Seal hatches.

VENTILATION
As coals in general may emit methane, hold spaces should be tested regularly with a suitable gas detector and the atmosphere above the cargo ventilated naturally if necessary.

CARRIAGE
Check frequently cargo is not becoming fluid.

DISCHARGE
No special requirements.

CLEAN UP
No special requirements.

COKE

DESCRIPTION
Grey lumps may contain fines (Breeze).

CHARACTERISTICS

ANGLE OF REPOSE	BULK DENSITY (kg/m^3)	STOWAGE FACTOR (m^3/t)
Not applicable	341 - 800	1.25 - 2.93
SIZE	**CLASS**	**GROUP**
Up to 200 mm	Not applicable	C

HAZARD
No special hazards.

This cargo is non-combustible or has a low fire-risk.

STOWAGE & SEGREGATION
No special requirements.

HOLD CLEANLINESS
No special requirements.

WEATHER PRECAUTIONS
No special requirements.

LOADING
Trim in accordance with cargo information required by SOLAS VI/2. If doubt exists, trim reasonably level to the boundaries of the cargo space so as to minimize the risk of shifting and to ensure that adequate stability will be maintained during the voyage.

PRECAUTIONS
Coke is very light and will cubically fill holds. Cover bilge wells with burlap. Coke will float and clog bilge lines, strums and scuppers if precautions are not taken.

VENTILATION
Ventilation not required.

CARRIAGE
No special requirements.

DISCHARGE
No special requirements.

CLEAN UP
Watch for blocked bilge wells and scuppers.

COKE BREEZE

DESCRIPTION
Greyish powder.

CHARACTERISTICS

ANGLE OF REPOSE	BULK DENSITY (kg/m^3)	STOWAGE FACTOR (m^3/t)
Not applicable	556	1.8
SIZE	**CLASS**	**GROUP**
less than 10 mm	Not applicable	A

HAZARD
Coke Breeze is liable to flow if it has sufficiently high moisture content.
This cargo is non-combustible or has a low fire-risk.

STOWAGE & SEGREGATION
No special requirements.

HOLD CLEANLINESS
No special requirements.

WEATHER PRECAUTIONS
No special requirements.

LOADING
Trim in accordance with cargo information required by SOLAS VI/2. If doubt exists, trim reasonably level to the boundaries of the cargo space so as to minimize the risk of shifting and to ensure that adequate stability will be maintained during the voyage. Coke Breeze is very light and will cubically fill holds.

PRECAUTIONS
Bilge wells should be clean and covered with burlap to prevent the ingress of cargo. Test cargo for flow characteristics. Certificates showing the test results should be given to the master to receive correct attention.

VENTILATION
Do not ventilate.

CARRIAGE
Keep a careful check that cargo is not reaching a flow state.

DISCHARGE
No special requirements.

CLEAN UP
Watch for blocked bilge wells and scuppers.

COLEMANITE

DESCRIPTION
A natural hydrated calcium borate. Fine to lumps, light grey appearance similar to clay. Moisture approximately 7%.

CHARACTERISTICS

ANGLE OF REPOSE	BULK DENSITY (kg/m^3)	STOWAGE FACTOR (m^3/t)
Not applicable	1639	0.61
SIZE	**CLASS**	**GROUP**
Up to 300 mm	Not applicable	C

HAZARD
No special hazards.

This cargo is non-combustible or has a low fire-risk.

STOWAGE & SEGREGATION
No special requirements.

HOLD CLEANLINESS
No special requirements.

WEATHER PRECAUTIONS
No special requirements.

LOADING
Trim in accordance with cargo information required by SOLAS VI/2. If doubt exists, trim reasonably level to the boundaries of the cargo space so as to minimize the risk of shifting and to ensure that adequate stability will be maintained during the voyage.

PRECAUTIONS
No special requirements.

VENTILATION
No special requirements.

CARRIAGE
No special requirements.

DISCHARGE
No special requirements.

CLEAN UP
No special requirements.

COPPER GRANULES

DESCRIPTION
Sphere shaped pebbles. 75% copper with lead, tin, zinc, traces of others. Odourless. Moisture content 1.5% approximately. Light grey colour when dry, dark green when wet. Odourless.

CHARACTERISTICS

ANGLE OF REPOSE	BULK DENSITY (kg/m^3)	STOWAGE FACTOR (m^3/t)
Not applicable	4000 - 4545	0.22-0.25
SIZE	**CLASS**	**GROUP**
Fines up to 10 mm Clinkers up to 50 mm	Not applicable	C

HAZARD
No special hazards.

This cargo is non-combustible or has a low fire-risk.

STOWAGE & SEGREGATION
No special requirements.

HOLD CLEANLINESS
No special requirements.

WEATHER PRECAUTIONS
No special requirements.

LOADING
Trim in accordance with cargo information required by SOLAS VI/2. If doubt exists, trim reasonably level to the boundaries of the cargo space so as to minimize the risk of shifting and to ensure that adequate stability will be maintained during the voyage.

As the density of the cargo is extremely high, care should be taken to ensure that the cargo is evenly spread across the tank top to equalize the weight distribution. Do not pile the cargo in the centre of the hatch during loading.

PRECAUTIONS
No special requirements.

VENTILATION
No special requirements.

CARRIAGE
No special requirements.

DISCHARGE
No special requirements.

CLEAN UP
No special requirements.

COPPER MATTE

DESCRIPTION
Crude black copper ore. Composed of 75% copper and 25% impurities. Small metallic round stones or pellets. Odourless.

CHARACTERISTICS

ANGLE OF REPOSE	BULK DENSITY (kg/m^3)	STOWAGE FACTOR (m^3/t)
Not applicable	2857 - 4000	0.25 - 0.35
SIZE	**CLASS**	**GROUP**
3 mm - 25 mm	Not applicable	C

HAZARD
No special hazards.

This cargo is non-combustible or has a low fire-risk.

STOWAGE & SEGREGATION
No special requirements.

HOLD CLEANLINESS
No special requirements.

WEATHER PRECAUTIONS
No special requirements.

LOADING
Trim in accordance with cargo information required by SOLAS VI/2. If doubt exists, trim reasonably level to the boundaries of the cargo space so as to minimize the risk of shifting and to ensure that adequate stability will be maintained during the voyage.

As the density of the cargo is extremely high, care should be taken to ensure that the cargo is evenly spread across the tank top to equalize the weight distribution. Do not pile the cargo in the centre of the hatch during loading.

PRECAUTIONS
No special requirements.

VENTILATION
Ventilation not required.

CARRIAGE
No special requirements.

DISCHARGE
No special requirements.

CLEAN UP
No special requirements.

COPRA (dry) UN 1363

DESCRIPTION
Dried kernels of coconuts with a penetrating rancid odour which may taint other cargoes.

CHARACTERISTICS

ANGLE OF REPOSE	BULK DENSITY (kg/m^3)	STOWAGE FACTOR (m^3/t)
Not applicable	500	2.0
SIZE	**CLASS**	**GROUP**
Not applicable	4.2	B

HAZARD
Liable to heat and ignite spontaneously especially when in contact with water. Liable to cause oxygen depletion in the cargo space.

STOWAGE & SEGREGATION
Do not stow against heated surfaces including fuel oil tanks which may require heating.

HOLD CLEANLINESS
Dry and clean without any residue of previous cargoes.

WEATHER PRECAUTIONS
Do not handle cargo during precipitation; keep dry, close hatches that are not being worked.

LOADING
Trim in accordance with cargo information required by SOLAS VI/2. If doubt exists, trim reasonably level to the boundaries of the cargo space so as to minimize the risk of shifting and to ensure that adequate stability will be maintained during the voyage.

Refuse to load wet copra.

PRECAUTIONS
Copra should preferably have been weathered for at least one month before shipment unless a certificate from a person recognized by the competent authority of the country of origin states a maximum moisture content of 5%. Smoking and the use of naked lights in cargo spaces and adjacent areas should be prohibited. Ventilate and test the atmosphere before persons enter cargo spaces.

VENTILATION
Surface ventilation required.

CARRIAGE
Record the cargo temperature at regular intervals to monitor self heating.

DISCHARGE
No special requirements.

CLEAN UP
No special requirements.

EMERGENCY PROCEDURES

SPECIAL EMERGENCY EQUIPMENT TO BE CARRIED Nil
EMERGENCY PROCEDURES Nil **EMERGENCY ACTION IN THE EVENT OF FIRE** Batten down; use ship's fixed fire-fighting installation if fitted. Exclusion of air may be sufficient to control fire. **MEDICAL FIRST AID** Refer to the Medical First Aid Guide (MFAG) as amended.

CRYOLITE

DESCRIPTION
A fluoride of sodium and aluminium used in the production of aluminium and for ceramic glazes. Grey pellets.

CHARACTERISTICS

ANGLE OF REPOSE	BULK DENSITY (kg/m^3)	STOWAGE FACTOR (m^3/t)
Not applicable	1429	0.70
SIZE	**CLASS**	**GROUP**
6.4 mm - 12.7 mm	Not applicable	C

HAZARD
Prolonged contact may cause serious damage to the skin and nervous system.
This cargo is non-combustible or has a low fire-risk.

STOWAGE & SEGREGATION
No special requirements.

HOLD CLEANLINESS
No special requirements.

WEATHER PRECAUTIONS
No special requirements.

LOADING
Trim in accordance with cargo information required by SOLAS VI/2. If doubt exists, trim reasonably level to the boundaries of the cargo space so as to minimize the risk of shifting and to ensure that adequate stability will be maintained during the voyage.

PRECAUTIONS
Persons involved in loading or discharging should wear overalls, goggles and face masks.

VENTILATION
Ventilation not required.

CARRIAGE
No special requirements.

DISCHARGE
No special requirements.

CLEAN UP
No special requirements.

DIAMMONIUM PHOSPHATE (D.A.P.)

DESCRIPTION
Odourless white crystals or powder. Depending on source it can be dusty. Hygroscopic.

CHARACTERISTICS

ANGLE OF REPOSE	BULK DENSITY (kg/m^3)	STOWAGE FACTOR (m^3/t)
30° - 40°	833 - 999	1.10 - 1.20
SIZE	**CLASS**	**GROUP**
Diam: 2.54 mm	Not applicable	C

HAZARD
No special hazards.

This cargo is non-combustible or has a low fire-risk.

STOWAGE & SEGREGATION
No special requirements.

HOLD CLEANLINESS
Clean and dry without any residue of previous cargoes.

WEATHER PRECAUTIONS
Do not handle cargo during precipitation; keep dry, close hatches that are not being worked.

LOADING
Trim in accordance with cargo information required by SOLAS VI/2. If doubt exists, trim reasonably level to the boundaries of the cargo space so as to minimize the risk of shifting and to ensure that adequate stability will be maintained during the voyage.

PRECAUTIONS
Personnel should wear protective clothing and goggles. Cover cargo with plastic foil to minimize damage in case of water ingress.

VENTILATION
Do not ventilate.

CARRIAGE
When carried in bulk, DAP in humid conditions will set hard in the hold. Condensation, cargo sweating and leaking hatch covers must be carefully watched. Pay close attention to hatch sealing.

DISCHARGE
Diammonium Phosphate is hygroscopic and will cake if wet. If cargo has hardened trimming may be necessary to avoid formation of overhanging faces. Maintain personnel protection precautions.

CLEAN UP
Pay particular attention to bilge wells.

DIRECT REDUCED IRON (A)
Briquettes, hot-moulded

DESCRIPTION
A material emanating from a densification process whereby the direct reduced iron (DRI) feed material is at a temperature greater than 650°C at time of moulding and has a density greater than 5.0 g/cm^3. Fines (under 4 mm) not to exceed 5%.

CHARACTERISTICS

ANGLE OF REPOSE	BULK DENSITY (kg/m^3)	STOWAGE FACTOR (m^3/t)
Not applicable	2857	0.35 To be verified by the shipper
SIZE	**CLASS**	**GROUP**
Approximate size: Length 90 mm to 130 mm Width 80 mm to 100 mm Thickness 20 mm to 50 mm Briquette weight 0.5 to 2.0 kg Fines: under 4 mm	MHB	B

HAZARD
Material may slowly evolve hydrogen after contact with water. Temporary self-heating of about 30°C may be expected after material handling in bulk.

This cargo is non-combustible or has a low fire-risk.

STOWAGE & SEGREGATION
"Separated from" goods of classes 1 (Division 1.4), 2, 3, 4 and 5 and class 8 acids in packaged form (see IMDG Code).

"Separated from" solid bulk materials of classes 4 and 5.

"Separated longitudinally by an intervening complete compartment or hold from" goods of class 1 other than Division 1.4.C.

Boundaries of compartments where DRI is carried should be resistant to fire and passage of water.

HOLD CLEANLINESS
Clean and dry.

WEATHER PRECAUTIONS
Do not load cargo during precipitation; keep dry, close hatches that are not being worked.

Open storage is acceptable prior to loading. Loading, including transfer from one ship to another during rain is unacceptable.

LOADING
Loading, including transfer from one ship to another, during rain is unacceptable.

Trim in accordance with cargo information required by SOLAS VI/2. If doubt exists, trim reasonably level to the boundaries of the cargo space so as to minimize the risk of shifting and to ensure that adequate stability will be maintained during the voyage.

As the density of the cargo is extremely high, care should be taken to ensure that the cargo is evenly spread across the tanktop to equalize the weight distribution and minimize the concentrations of fines. Do not pile the cargo in the centre of the hatch during loading.

PRECAUTIONS
A competent person recognized by the national Administration of the country of shipment should certify to the ship's master that the DRI, at the time of loading, is suitable for shipment and does not contain more than 5%.

Where possible, adjacent ballast tanks, other than double-bottom tanks, should be kept empty. Weather deck closures should be inspected and tested to ensure integrity.

Hot-moulded briquettes should not be loaded if product temperature is in excess of 65°C (150°F).

During discharge a fine spray of fresh water is permitted for dust control. The cargo temperature should be monitored during loading. The shipper may provide advice in amplification of this Code but not contrary thereto in respect of safety during carriage.

Protect machinery, accommodation and equipment from dust and in particular radars and exposed radio communications equipments.

During cargo handling "NO SMOKING" signs are to be posted on decks and in areas adjacent to cargo compartment and no naked lights should be permitted in these spaces.

VENTILATION
Surface ventilation required.

CARRIAGE
Cargo spaces containing DRI material may become oxygen-depleted and all due caution should be exercised upon entering such compartments.

Bilges should be sift-proof and kept dry during the voyage. Wooden fixtures such as battens, etc., should be removed.

A suitable detector for qualitative measurements of hydrogen should be on board. Ventilation should be such that escaping gases cannot reach living quarters on or under deck.

DISCHARGE
No special requirements.

CLEAN UP
No special requirements.

EMERGENCY PROCEDURES

SPECIAL EMERGENCY EQUIPMENT TO BE CARRIED Nil
EMERGENCY PROCEDURES Nil **EMERGENCY ACTION IN THE EVENT OF FIRE** Batten down. **Do not use water**. Seek expert advice. Early application of an inert gas to a smouldering situation may be effective. Preparations should be made for grab discharge if serious heating occurs. **MEDICAL FIRST AID** Refer to the Medical First Aid Guide (MFAG) as amended.

DIRECT REDUCED IRON (B)
Such as lumps, pellets and cold-moulded briquettes (not to be confused with ironsponge, spent)

DESCRIPTION
Direct Reduced Iron (DRI) (B) is a metallic material of a manufacturing process formed by the reduction (removal of oxygen) of iron oxide at temperatures below the fusion point of iron. Cold-moulded briquettes should be defined as those which have been moulded at a temperature of under 650°C or which have a density of less than 5.0 g/cm^3.

CHARACTERISTICS

ANGLE OF REPOSE	BULK DENSITY (kg/m^3)	STOWAGE FACTOR (m^3/t)
Not applicable	Not applicable	Up to 0.5
SIZE	**CLASS**	**GROUP**
Lumps and pellets: Average size particle size 6 mm to 25 mm with up to 5% fines (under 4 mm) Cold-moulded briquettes: Approximate maximum dimensions 35 mm to 40 mm	MHB	B

HAZARD
DRI may react with water and air to produce hydrogen and heat. The heat produced may cause ignition. Oxygen in an enclosed space may be depleted.

STOWAGE & SEGREGATION
"Separated from" goods of classes 1 (Division 1.4S), 2, 3, 4 and 5 and class 8 acids in packaged form (see IMDG Code).

"Separated from": solid bulk materials of classes 4 and 5. Goods of class 1, other than Division 1.4S, should not be carried in the same ship.

Boundaries of compartments where DRI is carried should be resistant to fire and passage of water.

HOLD CLEANLINESS
All cargo spaces should be clean and dry. Bilges should be sift-proof and kept dry during the voyage. Wooden fixtures such as battens, etc., should be removed.

WEATHER PRECAUTIONS
Do not load cargo during precipitation; keep dry, close hatches that are not being worked.

LOADING
Where possible, adjacent ballast tanks, other than double-bottom tanks, should be kept empty. Weather deck closures should be inspected and tested to ensure integrity.

DRI should not be loaded if material temperature is in excess of 65°C or 150°F.

PRECAUTIONS
A competent person recognized by the national Administration of the country of shipment should certify to the ship's master that the DRI, at the time of loading, is suitable for shipment. Shippers should certify that the material conforms with the requirement of this Code.

Prior to shipment, DRI should be aged for at least 72 hours, or treated with an air passivation technique, or some other equivalent method that reduces the reactivity of the material to at least the same level as the aged product. Hatches should be sealed. Close all ventilators and other openings, to maintain an inert atmosphere.

A. Shipper should provide necessary specific instructions for carriage, either:

1. Prior to loading, provision should be made to introduce the inert gas at tank top level so that the whole of the stow can be maintained at a low oxygen level throughout the voyage. Maintenance throughout the voyage of cargo spaces under an inert atmosphere containing less than 5% oxygen. The hydrogen content of the atmosphere should be maintained at less that 1% by volume; or

2. That the DRI has been manufactured or treated with an oxidation and corrosion-inhibiting process which has been proved, to the satisfaction of the competent authority, to provide effective protection against dangerous reaction with seawater or air under shipping conditions.

B. The provision of paragraph A above may be waived or varied if agreed to by the competent authorities of the countries concerned, taking into account the sheltered nature, length, duration, or any other applicable conditions of any specific voyage.

3. The ship selected should be suitable in all respects for carriage of DRI.

4. Except as provided for under paragraph A (2) above, any material which is wet or is known to have been wetted should not be accepted for carriage.

The cargo should be loaded, stowed and transported under dry conditions.

Protect machinery, accommodation and equipment from dust and in particular radars and exposed radio communications equipments.

VENTILATION
Do not ventilate.

CARRIAGE
Suitable detectors for qualitative measurements oxygen and hydrogen should be on board.

The detectors should be suitable for use in an inert atmosphere. Regularly monitor for oxygen and hydrogen. Record and keep the measurements.

Cargo spaces containing DRI materials may become oxygen-depleted and all due caution should be exercised upon entering such compartments.

No smoking, burning, cutting, chipping or other source of ignition should be allowed in the vicinity of cargo spaces containing DRI.

DISCHARGE
No special requirements.

CLEAN UP
No special requirements.

EMERGENCY PROCEDURES

SPECIAL EMERGENCY EQUIPMENT TO BE CARRIED Nil
EMERGENCY PROCEDURES Nil **EMERGENCY ACTION IN THE EVENT OF FIRE** Batten down. **Do not use water.** Seek expert advice. Early application of an inert gas to a smouldering situation may be effective. If a fire situation develops, the ship should make for the nearest suitable port and neither water, steam nor additional carbon dioxide should be used at this stage. If nitrogen gas is available, the use of this gas to keep the oxygen concentration down will contain the fire. Preparations should be made for grab discharge if serious heating occurs. **MEDICAL FIRST AID** Refer to the Medical First Aid Guide (MFAG) as amended.

DOLOMITE

DESCRIPTION
Dolomite is a light yellow/brown coloured mineral stone which is very hard and compact.

Dolomite may sometimes, incorrectly, be used to describe a material consisting of the oxides of calcium and magnesium (dolomitic quicklime). In this case, see "LIME (UNSLAKED)".

CHARACTERISTICS

ANGLE OF REPOSE	BULK DENSITY (kg/m^3)	STOWAGE FACTOR (m^3/t)
Not applicable	1429 - 1667	0.6 - 0.7
SIZE	**CLASS**	**GROUP**
Up to 32 mm	Not applicable	C

HAZARD
No special hazards.

This cargo is non-combustible or has a low fire-risk.

STOWAGE & SEGREGATION
No special requirements.

HOLD CLEANLINESS
No special requirements.

WEATHER PRECAUTIONS
No special requirements.

LOADING
Trim in accordance with cargo information required by SOLAS VI/2. If doubt exists, trim reasonably level to the boundaries of the cargo space so as to minimize the risk of shifting and to ensure that adequate stability will be maintained during the voyage.

PRECAUTIONS
No special requirements.

VENTILATION
Ventilation not required.

CARRIAGE
No special requirements.

DISCHARGE
No special requirements.

CLEAN UP
No special requirements.

FELSPAR LUMP

DESCRIPTION
Crystalline minerals consisting of silicates of aluminium with potassium sodium, calcium and barium. White or reddish in colour.

CHARACTERISTICS

ANGLE OF REPOSE	BULK DENSITY (kg/m^3)	STOWAGE FACTOR (m^3/t)
Not applicable	1667	0.60
SIZE	**CLASS**	**GROUP**
0.1 mm - 300 mm	Not applicable	C

HAZARD
No special hazards.
This cargo is non-combustible or has a low fire-risk.

STOWAGE & SEGREGATION
No special requirements.

HOLD CLEANLINESS
No special requirements.

WEATHER PRECAUTIONS
No special requirements.

LOADING
Trim in accordance with cargo information required by SOLAS VI/2. If doubt exists, trim reasonably level to the boundaries of the cargo space so as to minimize the risk of shifting and to ensure that adequate stability will be maintained during the voyage.

PRECAUTIONS
No special requirements.

VENTILATION
Ventilation not required.

CARRIAGE
No special requirements.

DISCHARGE
No special requirements.

CLEAN UP
No special requirements.

FERROCHROME

DESCRIPTION

Raw material of iron mixed with chrome. Extremely heavy cargo.

CHARACTERISTICS

ANGLE OF REPOSE	BULK DENSITY (kg/m^3)	STOWAGE FACTOR (m^3/t)
Not applicable	3571 - 5556	0.18 - 0.26
SIZE	**CLASS**	**GROUP**
Up to 300 mm	Not applicable	C

HAZARD
No special hazards.

This cargo is non-combustible or has a low fire-risk.

STOWAGE & SEGREGATION
No special requirements.

HOLD CLEANLINESS
No special requirements.

WEATHER PRECAUTIONS
No special requirements.

LOADING
Trim in accordance with cargo information required by SOLAS VI/2. If doubt exists, trim reasonably level to the boundaries of the cargo space so as to minimize the risk of shifting and to ensure that adequate stability will be maintained during the voyage.

As the density of the cargo is extremely high, care should be taken to ensure that the cargo is evenly spread across the tank top to equalize the weight distribution. Do not pile the cargo in the centre of the hatch during loading.

PRECAUTIONS
No special requirements.

VENTILATION
Ventilation not required.

CARRIAGE
No special requirements.

DISCHARGE
No special requirements.

CLEAN UP
No special requirements.

FERROCHROME
Exothermic

DESCRIPTION
An alloy of iron and chromium. Extremely heavy cargo.

CHARACTERISTICS

ANGLE OF REPOSE	BULK DENSITY (kg/m^3)	STOWAGE FACTOR (m^3/t)
Not applicable	3571-5556	0.18 - 0.28
SIZE	**CLASS**	**GROUP**
Up to 300 mm	Not applicable	C

HAZARD
No special hazards.

This cargo is non-combustible or has a low fire-risk.

STOWAGE & SEGREGATION
No special requirements.

HOLD CLEANLINESS
No special requirements.

WEATHER PRECAUTIONS
No special requirements.

LOADING
Trim in accordance with cargo information required by SOLAS VI/2. If doubt exists, trim reasonably level to the boundaries of the cargo space so as to minimize the risk of shifting and to ensure that adequate stability will be maintained during the voyage.

As the density of the cargo is extremely high, care should be taken to ensure that the cargo is evenly spread, across the tank top to equalize the weight distribution. Do not pile the cargo in the centre of the hatch during loading.

PRECAUTIONS
During loading, carriage and discharging welding or other hot work should not be allowed.

VENTILATION
Ventilation not required.

CARRIAGE
No special requirements.

DISCHARGE
No special requirements.

CLEAN UP
No special requirements.

FERROMANGANESE

DESCRIPTION
Raw material or iron mixed with manganese.

CHARACTERISTICS

ANGLE OF REPOSE	BULK DENSITY (kg/m^3)	STOWAGE FACTOR (m^3/t)
Not applicable	3571-5556	0.18 - 0.28
SIZE	**CLASS**	**GROUP**
Up to 300 mm	Not applicable	C

HAZARD
No special hazards.

This cargo is non-combustible or has a low fire-risk.

STOWAGE & SEGREGATION
No special requirements.

HOLD CLEANLINESS
No special requirements.

WEATHER PRECAUTIONS
No special requirements.

LOADING
Trim in accordance with cargo information required by SOLAS VI/2. If doubt exists, trim reasonably level to the boundaries of the cargo space so as to minimize the risk of shifting and to ensure that adequate stability will be maintained during the voyage.

As the density of the cargo is extremely high, care should be taken to ensure that the cargo is evenly spread across the tank top to equalize the weight distribution. Do not pile the cargo in the centre of the hatch during loading.

PRECAUTIONS
No special requirements.

VENTILATION
Ventilation not required.

CARRIAGE
No special requirements.

DISCHARGE
No special requirements.

CLEAN UP
No special requirements.

FERRONICKEL

DESCRIPTION
An alloy of iron and nickel.

CHARACTERISTICS

ANGLE OF REPOSE	BULK DENSITY (kg/m^3)	STOWAGE FACTOR (m^3/t)
Not applicable	4167	0.24
SIZE	**CLASS**	**GROUP**
Up to 300 mm	Not applicable	C

HAZARD
No special hazards.

This cargo is non-combustible or has a low fire-risk.

STOWAGE & SEGREGATION
No special requirements.

HOLD CLEANLINESS
No special requirements.

WEATHER PRECAUTIONS
No special requirements.

LOADING
Trim in accordance with cargo information required by SOLAS VI/2. If doubt exists, trim reasonably level to the boundaries of the cargo space so as to minimize the risk of shifting and to ensure that adequate stability will be maintained during the voyage.

As the density of the cargo is extremely high, care should be taken to ensure that the cargo is evenly spread across the tank top to equalize the weight distribution. Do not pile the cargo in the centre of the hatch during loading.

PRECAUTIONS
No special requirements.

VENTILATION
Ventilation not required.

CARRIAGE
No special requirements.

DISCHARGE
No special requirements.

CLEAN UP
No special requirements.

FERROPHOSPHORUS
(Including briquettes)

DESCRIPTION
An alloy of iron and phosphorus used in the steel industry.

CHARACTERISTICS

ANGLE OF REPOSE	BULK DENSITY (kg/m^3)	STOWAGE FACTOR (m^3/t)
Not applicable	5000	0.2 (for briquettes)
SIZE	**CLASS**	**GROUP**
Diam: 2.54 mm	MHB	B

HAZARD
May evolve flammable and toxic gases (e.g. phosphine) in contact with water.

This cargo is non-combustible or has a low fire-risk.

STOWAGE & SEGREGATION
Segregation as for class 4.3 materials. "Separated from" foodstuffs and class 8 liquids.

HOLD CLEANLINESS
Clean and dry without any residue of previous cargoes.

WEATHER PRECAUTIONS
Do not handle cargo during precipitation; keep dry, close hatches that are not being worked.

LOADING
Trim in accordance with cargo information required by SOLAS VI/2. If doubt exists, trim reasonably level to the boundaries of the cargo space so as to minimize the risk of shifting and to ensure that adequate stability will be maintained during the voyage. As the density of the cargo is extremely high, care should be taken to ensure that the cargo is evenly spread across the tank top to equalize the weight distribution. Do not pile the cargo in the centre of the hatch during loading.

PRECAUTIONS
Keep as dry as reasonably practicable.

VENTILATION
Mechanical ventilation required. Ventilation fans should be safe for the use in a flammable atmosphere. They should normally be run continuously whenever cargoes are on board. Where this is impracticable, they should be operated as weather permits and in any case for a reasonable period prior to discharge.

CARRIAGE
No special requirements.

DISCHARGE
No special requirements.

CLEAN UP
Sweep clean. Avoid using water because of the danger of gas.

EMERGENCY PROCEDURES

SPECIAL EMERGENCY EQUIPMENT TO BE CARRIED Self-contained breathing apparatus.
EMERGENCY PROCEDURES Wear self-contained breathing apparatus. **EMERGENCY ACTION IN THE EVENT OF FIRE** Batten down and use CO_2 if available. **Do not use water.** **MEDICAL FIRST AID** Refer to the Medical First Aid Guide (MFAG) as amended.

FERROSILICON UN 1408
with 30% or more but less than 90% silicon
(including briquettes) (see appendix to this schedule)

DESCRIPTION
Ferrosilicon is an extremely heavy cargo.

CHARACTERISTICS

ANGLE OF REPOSE	BULK DENSITY (kg/m^3)	STOWAGE FACTOR (m^3/t)
Not applicable	1389 - 2083 1111 - 1538 (for briquettes)	0.48 - 0.72 0.65 - 0.90 (for briquettes)
SIZE	**CLASS**	**GROUP**
Up to 300 mm Briquettes	4.3	B

HAZARD
In contact with moisture or water it may evolve hydrogen, a flammable gas which may form explosive mixtures with air and may, under similar circumstances, produce phosphine and arsine, which are highly toxic gases.

This cargo is non-combustible or has a low fire-risk.

STOWAGE & SEGREGATION
"Separated from" foodstuffs and all class 8 liquids.

HOLD CLEANLINESS
Clean and dry without any residue of previous cargoes.

WEATHER PRECAUTIONS
Do not load cargo during precipitation; keep dry, close hatches that are not being worked.

LOADING
Trim in accordance with cargo information required by SOLAS VI/2. If doubt exists, trim reasonably level to the boundaries of the cargo space so as to minimize the risk of shifting and to ensure that adequate stability will be maintained during the voyage. Stow evenly across tank tops. Refer to the appendix to this schedule.

PRECAUTIONS
A certificate should be given to the master by the shipper stating that the cargo has been stored under cover but exposed to fine weather and not exposed to rainy weather for not less than three days prior to shipment. Refer to the appendix to this schedule.

VENTILATION
Continuous mechanical surface ventilation required. If maintaining ventilation endangers the ship or the cargo, it may be interrupted unless there is a risk of explosion or other danger due to interruption of the ventilation. In any case it must be maintained for a reasonable period prior to discharge. Refer to the appendix to this schedule.

CARRIAGE
Suitable gas detectors for quantitative measurements of hydrogen, phosphine and arsine should be on board. Regularly monitor for hydrogen, phosphine and arsine. Record and keep the measurements.

DISCHARGE
Refer to the appendix to this schedule.

CLEAN UP
Double sweep clean. Avoid using water because of danger of gas.

EMERGENCY PROCEDURES

SPECIAL EMERGENCY EQUIPMENT TO BE CARRIED Self-contained breathing apparatus
EMERGENCY PROCEDURES Wear self-contained breathing apparatus **EMERGENCY ACTION IN THE EVENT OF FIRE** Batten down and use CO_2 if available. **Do not use water** **MEDICAL FIRST AID** Refer to the Medical First Aid Guide (MFAG) as amended

APPENDIX

GENERAL REQUIREMENTS FOR CARRIAGE OF FERROSILICON

1. The compartment to contain ferrosilicon may be inspected by the competent authority.

2. Two sets of self-contained breathing apparatus must be carried in the ship - in addition to normal fire-fighting equipment.

3. Measurements of gas concentrations should be taken at least once during every eight hours at each outlet ventilator and in any other accessible space adjacent to the compartment where the ferrosilicon is stowed and the results entered in the log book. Facilities must be provided to make accurate determinations of the gas concentrations at each outlet ventilator without danger to the operator.

4. Ventilation fans are to be in operation at all times from commencement of loading until the compartment is free of ferrosilicon.

5. The bilge wells are to be in a clean, dry condition before commencement of loading. The bilge timbers are to be in good condition and covered with double hessian.

6. The bilge wells must be opened up and the compartment washed out after unloading. A gas check must be made before washing out begins.

7. In older vessels it could be advisable to pump out the ballast in tanks adjacent to a compartment containing ferrosilicon. (In case of leaks.)

DETAILED REQUIREMENTS

1. Prior to loading the bulkheads to the engine room should be gastight and should be inspected and approved by the competent authority who should also be satisfied as to the safety of the bilge pumping arrangements. Inadvertent pumping through machinery spaces should be avoided.

(i) Bilge wells should be clean and dry before commencement of loading and covered with hessian to preclude entry of the ferrosilicon. Where the bilge suction valve of the compartment is located in the machinery space the valve is to be opened up and if necessary the valve lid and seat lapped to a fine finish. After re-assembly the valve is to be locked shut and a notice placed adjacent to the valve warning against opening without the master's permission.

(ii) All pipes passing through the compartment should be in good order and condition. Hold atmosphere sampling units should be effectively blanked off.

(iii) Electrical circuits which are unsuitable for use in an explosive atmosphere are to be isolated by removal of links in the system other than fuses.

(iv) The cargo spaces should be ventilated by at least two separate fans which should be explosion-proof of arranged so that the escaping gas flow is separated form electrical cables and components. The total ventilation should be at least 6 changes per hour, based on an empty compartment.

(v) Ventilator trunkings must be in sound condition and so arranged to preclude interconnection of the hold atmosphere with other cargo spaces, accommodation or work areas.

Operational Requirements

(i) No smoking or naked flame is to be permitted on deck in the vicinity of the hold or in the hold itself during loading or unloading.

(ii) Any portable lighting must be safe for use in an explosive atmosphere.

(iii) The cargo must be dry and work is to cease during wet weather conditions and the hold covered.

(iv) Sets of self-contained breathing apparatus are to be available for immediate use together with lifeline and a gas detector.

(v) Prior to commencing unloading the hold atmosphere is to be tested for the presence of toxic and flammable gases.

(vi) Checks for contaminant gases are to be carried out at 30 minute intervals while persons are in the hold.

(vii) Entry into the hold is to be prohibited when gas concentrations exceed the Threshold Limit Values, for phosphine (0.3 ppm) for arsine (0.05 ppm) or where the oxygen level is below 18%.

GASES RELEASES FROM FERROSILICON IMPURITIES WHEN WATER IS ADDED

(i) Arsine

Arsine is a toxic, colourless gas with a garlic like odour.

Toxicity

Arsine is a nerve and blood poison. There is generally a delay before the onset of symptoms (sometimes a day or so). These are at first indefinite.

Symptoms

1. Feeling of malaise, difficulty in breathing, severe headache, giddiness, fainting fits, nausea, vomiting and gastric disturbances.

2. In severe cases, vomiting may be pronounced, the mucous membranes may have a bluish discolouration and urine is dark and bloodstained. After a day or two there is severe anaemia and jaundice.

Concentration

A concentration of 500 ppm is lethal to humans after exposure of a few minutes, while concentrations of 250 ppm are dangerous to life after 30 minutes exposure. Concentrations of 6.25 to 15.5 ppm are dangerous after exposure of 30-60 minutes. A concentration of 0.05 ppm is the threshold long limit to which a person may be exposed.

(ii) Phosphine

Phosphine is colourless, flammable, highly toxic and has the odour of rotting fish.

Toxicity

Phosphine acts on the central nervous system and the blood.

Symptoms

The symptoms exhibited by phosphine poisoning are an oppressed feeling in the chest, headache, vertigo, general debility, loss of appetite and great thirst. Concentrations of 2000 ppm for a few minutes and 400-600 ppm are dangerous to life. 0.3 ppm is the maximum concentration tolerable for several hours without symptoms.

No long term exposures should be permitted.

FERROSILICON
containing 25% to 30% silicon, or 90% or more silicon (including briquettes)
(See appendix to this schedule)

DESCRIPTION
Ferrosilicon is an extremely heavy cargo.

CHARACTERISTICS

ANGLE OF REPOSE	BULK DENSITY (kg/m^3)	STOWAGE FACTOR (m^3/t)
Not applicable	1389 - 2083 1111 - 1538	0.48 - 0.72 0.65 - 0.90 (for briquettes)
SIZE	**CLASS**	**GROUP**
Diam: 2.54 mm	MHB	B

HAZARD
In contact with moisture or water it may evolve hydrogen, a flammable gas which may form explosive mixtures with air and may, under similar circumstances, produce phosphine and arsine, which are highly toxic gases.

This cargo is non-combustible or has a low fire-risk.

STOWAGE & SEGREGATION
Segregation as required for class 4.3 materials but "separated from" foodstuffs and all class 8 liquids.

HOLD CLEANLINESS
Clean and dry without any residue of previous cargoes.

WEATHER PRECAUTIONS
Do not load cargo during precipitation; keep dry, close hatches that are not being worked.

LOADING
Trim in accordance with cargo information required by SOLAS VI/2. If doubt exists, trim reasonably level to the boundaries of the cargo space so as to minimize the risk of shifting and to ensure that adequate stability will be maintained during the voyage. Stow evenly across tank tops. Refer to the appendix to this schedule.

PRECAUTIONS
A certificate must be given to the master by the shipper stating that the material has been stored under cover but exposed to the weather for not less than three days prior to shipment. Refer to the appendix to this schedule.

VENTILATION
Continuously mechanical surface ventilation required. If maintaining ventilation endangers the ship or the cargo, it may be interrupted unless there is risk of explosion or other danger due to interruption of the ventilation. In any case it must be maintained for a reasonable period prior to discharge. Refer to the appendix to this schedule.

CARRIAGE
Suitable gas detectors for quantitative measurements of hydrogen, phosphine and arsine should be on board. Regularly monitor for hydrogen, phosphine and arsine. Record and keep the measurements. Refer to the appendix to this schedule.

DISCHARGE
Refer to the appendix to this schedule.

CLEAN UP
Double sweep clean. Avoid using water because of danger of gas.

EMERGENCY PROCEDURES

SPECIAL EMERGENCY EQUIPMENT TO BE CARRIED Self-contained breathing apparatus
EMERGENCY PROCEDURES Wear self-contained breathing apparatus **EMERGENCY ACTION IN THE EVENT OF FIRE** Batten down and use CO_2 if available. Do not use water. **MEDICAL FIRST AID** Refer to the Medical First Aid Guide (MFAG) as amended

APPENDIX

GENERAL REQUIREMENTS FOR CARRIAGE OF FERROSILICON

1. The compartment to contain ferrosilicon may be inspected by the competent authority.

2. Two sets of self-contained breathing apparatus must be carried in the ship - in addition to normal fire-fighting equipment.

3. Measurements of gas concentrations should be taken at least once during every eight hours at each outlet ventilator and in any other accessible space adjacent to the compartment where the ferrosilicon is stowed and the results entered in the log book. Facilities must be provided to make accurate determinations of the gas concentrations at each outlet ventilator without danger to the operator.

4. A certificate stating the percentage of silicon present in the consignment is to be produced by the shipper before commencement of loading.

5. The bilge wells are to be in a clean, dry condition before commencement of loading. The bilge timbers are to be in good condition and covered with double hessian.

6. The bilge wells must be opened up and the compartment washed out after unloading. A gas check must be made before washing out begins.

7. In older vessels it could be advisable to pump out the ballast in tanks adjacent to a compartment containing ferrosilicon. (In case of leaks.)

DETAILED REQUIREMENTS

1. Prior to loading the bulkheads to the engine room should be gastight and should be inspected and approved by the competent authority who should also be satisfied as to the safety of the bilge pumping arrangements. Inadvertent pumping through machinery spaces should be avoided.

(i) Bilge wells should be clean and dry before commencement of loading and covered with hessian to preclude entry of the ferrosilicon. Where the bilge suction valve of the compartment is located in the machinery space the valve is to be opened up and if necessary the valve lid and seat lapped to a fine finish. After re-assembly the valve is to be locked shut and a notice placed adjacent to the valve warning against opening without the master's permission.

(ii) All pipes passing through the compartment should be in good order and condition. Hold atmosphere sampling units should be effectively blanked off.

(iii) Electrical circuits which are unsuitable for use in an explosive atmosphere are to be isolated by removal of links in the system other than fuses.

(iv) The cargo spaces should be ventilated by at least two separate fans which should be explosion-proof and arranged so that the escaping gas flow is separated from electrical cables and components. The total ventilation should be at least 6 changes per hour, based on an empty compartment.

(v) Ventilator trunkings must be in sound condition and so arranged to preclude interconnection of the hold atmosphere with other cargo spaces, accommodation or work areas.

Operational Requirements

(i) No smoking or naked flame is to be permitted on deck in the vicinity of the hold or in the hold itself during loading or unloading.

(ii) Any portable lighting must be safe for use in an explosive atmosphere.

(iii) The cargo must be dry and work is to cease during wet weather conditions and the hold covered.

(iv) Sets of self-contained breathing apparatus are to be available for immediate use together with lifeline and a gas detector.

(v) Prior to commencing unloading the hold atmosphere is to be tested for the presence of toxic and flammable gases.

(vi) Checks for contaminant gases are to be carried out at 30 minute intervals while persons are in the hold.

(vii) Entry into the hold is to be prohibited when gas concentrations exceed the Threshold Limit Values, for phosphine (0.3 ppm) for arsine (0.05 ppm) or where the oxygen level is below 18%.

GASES RELEASED FROM FERROSILICON IMPURITIES WHEN WATER IS ADDED

(i) Arsine

Arsine is a toxic, colourless gas with a garlic like odour.

Toxicity

Arsine is a nerve and blood poison. There is generally a delay before the onset of symptoms (sometimes a day or so). These are at first indefinite.

Symptoms

1. Feeling of malaise, difficulty in breathing, severe headache, giddiness, fainting fits, nausea, vomiting and gastric disturbances.

2. In severe cases, vomiting may be pronounced, the mucous membranes may have a bluish discolouration and urine is dark and bloodstained. After a day or two there is severe anaemia and jaundice.

Concentration

A concentration of 500 ppm is lethal to humans after exposure of a few minutes, while concentrations of 250 ppm are dangerous to life after 30 minutes exposure. Concentrations of 6.25 to 15.5 ppm are dangerous after exposure of 30-60 minutes. A concentration of 0.05 ppm is the threshold limit long term to which a person may be exposed.

(ii) Phosphine

Phosphine is colourless, flammable, highly toxic and has the odour of rotting fish.

Toxicity

Phosphine acts on the central nervous system and the blood.

Symptoms

The symptoms exhibited by phosphine poisoning are an oppressed feeling in the chest, headache, vertigo, general debility, loss of appetite and great thirst. Concentrations of 2000 ppm for a few minutes and 400-600 ppm are dangerous to life. 0.3 ppm is the maximum concentration tolerable for a few minutes.

No long-term exposures should be permitted.

FERROUS METAL BORINGS, SHAVINGS, TURNINGS OR CUTTINGS UN 2793
In a form liable to self heating.

DESCRIPTION
Metal drillings usually wet or contaminated with such materials as unsaturated cutting oil, oily rags and other combustible material.

This schedule should **not** apply to consignments of materials which are accompanied by a declaration submitted prior to loading by the shipper and stating that they have no self-heating properties when transported in bulk.

CHARACTERISTICS

ANGLE OF REPOSE	BULK DENSITY (kg/m^3)	STOWAGE FACTOR (m^3/t)
Not applicable	Various	Various
SIZE	**CLASS**	**GROUP**
Not applicable	4.2	B

HAZARD
These materials are liable to self-heat and ignite spontaneously, particularly when in a finely divided form, wet or contaminated with such materials, as unsaturated cutting oil, oily rags and other combustible matter.

Excessive amounts of cast iron borings or organic materials may encourage heating. Self-heating or inadequate ventilation may cause dangerous depletion of oxygen in cargo spaces.

STOWAGE & SEGREGATION
"Separated from" foodstuffs.

HOLD CLEANLINESS
Clean and dry without any residue of previous cargoes.

WEATHER PRECAUTIONS
Do not handle cargo during precipitation; keep dry, close hatches that are not being worked.

LOADING
During loading the material should be compacted in the cargo space as frequently as practicable with a bulldozer or other means. Keep the bilge of each cargo space in which the cargo is stowed as dry as practicable. After loading the cargo should be trimmed to eliminate peaks and compacted.

Wooden sweat battens and dunnage should be removed from the cargo space before the cargo is loaded.

PRECAUTIONS
Prior to loading the temperature should not exceed 55°C. The temperature of the material should be taken prior to and during loading. The temperature should be obtained from between 200 mm and 350 mm into the pile. If the temperature exceeds 90°C during loading, further loading should cease and not recommence until the temperature has fallen below 85°C.

The ship should not depart unless the temperature is below 65°C and has shown a steady or downward trend in temperature for at least eight hours.

VENTILATION
Do not ventilate.

CARRIAGE
Monitor and record the surface temperature of the cargo daily during the voyage. Temperature readings should be taken in such a way as not to require entry into the cargo space or, alternatively if entry is required for this purpose, at least two sets of self-contained breathing apparatus, additional to those required by regulation II-2/10.10 of the 1974 SOLAS Convention, as amended, should be provided.

DISCHARGE
Entry into cargo spaces containing this material should be made only with the main hatches open and after adequate ventilation and when using breathing apparatus.

CLEAN UP
Make sure that oil spillages, if any, are cleaned from tank tops and bilge wells before hosing out.

EMERGENCY PROCEDURES

SPECIAL EMERGENCY EQUIPMENT TO BE CARRIED Self-contained breathing apparatus
EMERGENCY PROCEDURES Nil **EMERGENCY ACTION IN THE EVENT OF FIRE** Whilst at sea, any rise in surface temperature of the material indicates a self-heating reaction problem. If the temperature should rise to 80°C a potential fire situation is developing and the ship should make for the nearest suitable port. Batten down. **Water should not be used at sea.** Early application of an inert gas to a smouldering situation may be effective. **MEDICAL FIRST AID** Refer to the Medical First Aid Guide (MFAG) as amended.

REMARK
In port, copious quantities of water may be used, but due consideration should be given to stability.

FERTILIZERS WITHOUT NITRATES
(non-hazardous)

DESCRIPTION
Powder and granular. Greenish, brown or beige in colour. Odourless. Very low moisture content (0%-1%). Hygroscopic.

CHARACTERISTICS

ANGLE OF REPOSE	BULK DENSITY (kg/m^3)	STOWAGE FACTOR (m^3/t)
Not applicable	714 - 1111	0.90 - 1.40
SIZE	**CLASS**	**GROUP**
1 mm - 3 mm	Not applicable	C

HAZARD
No special hazards.

This cargo is non-combustible or has a low fire-risk.

STOWAGE & SEGREGATION
No special requirements.

HOLD CLEANLINESS
No special requirements.

WEATHER PRECAUTIONS
Do not handle cargo during precipitation; keep dry, close hatches that are not being worked.

LOADING
Trim in accordance with cargo information required by SOLAS VI/2. If doubt exists, trim reasonably level to the boundaries of the cargo space so as to minimize the risk of shifting and to ensure that adequate stability will be maintained during the voyage.

PRECAUTIONS
No special requirements.

VENTILATION
Do not ventilate.

CARRIAGE
No special requirements.

DISCHARGE
Fertilizers are hygroscopic and will cake if wet. If cargo has hardened trimming may be necessary to avoid formation of overhanging faces.

CLEAN UP
No special requirements.

FISH (IN BULK)

DESCRIPTION
Fish carried in bulk after freezing.

CHARACTERISTICS

ANGLE OF REPOSE	BULK DENSITY (kg/m^3)	STOWAGE FACTOR (m^3/t)
Not applicable	Not applicable	Not applicable
SIZE	**CLASS**	**GROUP**
Various	Not applicable	A

HAZARD
Fish carried in bulk may liquefy.

This cargo is non-combustible or has a low fire-risk.

STOWAGE & SEGREGATION
No special requirements.

HOLD CLEANLINESS
No special requirements.

WEATHER PRECAUTIONS
No special requirements.

LOADING
Trim in accordance with cargo information required by SOLAS VI/2. If doubt exists, trim reasonably level to the boundaries of the cargo space so as to minimize the risk of shifting and to ensure that adequate stability will be maintained during the voyage.

PRECAUTIONS
Consult competent authority when proposed to carry fish in bulk. Clean and test bilge wells.

VENTILATION
Ventilation not required.

CARRIAGE
No special requirements.

DISCHARGE
No special requirements.

CLEAN UP
After completion of unloading remaining cargo residues are liable to decomposition and emission of toxic gases and depletion of oxygen may occur.

FISHMEAL (FISHSCRAP), STABILIZED UN 2216
Anti-oxidant treated

*The provisions of this entry should **not** apply to consignments of fishmeal, Group C, which are accompanied by a certificate issued by the competent authority of the country of shipment, stating that the material has no self-heating properties when transported in bulk.*

DESCRIPTION
Brown to greenish-brown material obtained through heating and drying of oily fish. Moisture content: greater than 5% but not exceeding 12%, by mass. Strong odour may affect other cargo. Fat content; not more than 15%, by mass.

CHARACTERISTICS

ANGLE OF REPOSE	BULK DENSITY (kg/m^3)	STOWAGE FACTOR (m^3/t)
Not applicable	300 - 700	1.5 - 3.0
SIZE	**CLASS**	**GROUP**
Not applicable	9	B

HAZARD
Liable to heat spontaneously unless has low fat content or effectively anti-oxidant treated. Liable to cause oxygen depletion in cargo space.

STOWAGE & SEGREGATION
Segregation as required for class 4.2 materials.

HOLD CLEANLINESS
Clean and dry.

WEATHER PRECAUTIONS
Do not handle cargo during precipitation, keep dry, close hatches that are not being worked.

LOADING
Trim in accordance with cargo information required by SOLAS VI/2. If doubt exists, trim reasonably level to the boundaries of the cargo space so as to minimize the risk of shifting and to ensure that adequate stability will be maintained during the voyage.

The temperature of the material should not, at the time of loading, exceed 35°C or 5°C above ambient temperature, which ever is higher.

Note: No weathering/curing is required prior to loading.

PRECAUTIONS

1. Stabilization of fishmeal should be achieved to prevent spontaneous combustion by effective application of between 400 and a 1000 mg/kg (ppm) ethoxyquin, or of between 1000 and 4000 mg/kg (ppm) butylated hydroxytolune at the time of production. This application should take place not more that 12 months prior to shipment. Anti-oxidant remnant concentration should be not less than 100 mg/kg (ppm) at the time of shipment.

2. Certificates from a person recognized by the competent authority of the country of shipment should state: moisture content; fat content; details of anti-oxidant treatment for meals older than six months; anti-oxidant concentrations at the time of shipment, which must exceed 100 mg/kg (ppm); total weight of the consignment; temperature of fishmeal at the time of dispatch from the factory and the date of production.

An oxygen meter for measuring the concentration of oxygen in the cargo space should be provided.

Entry of personnel into enclosed spaces should not be permitted until tests have been carried out and it has been established that the oxygen content has been restored to a normal level throughout the space, unless adequate ventilation and air circulation throughout the free space above the material has been effected.

See Appendix 7 in this Code for general precaution and procedures for entering enclosed spaces.

VENTILATION
Surface ventilation required.

If the temperature of the material exceeds 55°C and continues to increase, ventilation to the cargo space should be restricted. If self-heating continues, then carbon dioxide or inert gas should be introduced.

CARRIAGE
Cargo should be kept as cool and dry as reasonably practicable.

Temperature readings should be taken at eight-hour intervals throughout the material. The readings should be recorded and the information kept on board.

DISCHARGE
No special requirements.

CLEAN UP
No special requirements.

EMERGENCY PROCEDURES

SPECIAL EMERGENCY EQUIPMENT TO BE CARRIED Self-contained breathing apparatus.
EMERGENCY PROCEDURES Wear self-contained breathing apparatus. **EMERGENCY ACTION IN THE EVENT OF FIRE** Batten down; use ship's fixed fire-fighting installation, if fitted. **MEDICAL FIRST AID** Refer to the Medical First Aid Guide (MFAG) as amended.

FLUORSPAR

DESCRIPTION
Yellow, green or purple crystals. Coarse dust.

CHARACTERISTICS

ANGLE OF REPOSE	BULK DENSITY (kg/m^3)	STOWAGE FACTOR (m^3/t)
Not applicable	Dry: 1429 - 1786 Wet: 1786 - 2128	Dry: 0.56 - 0.70 Wet: 0.47 - 0.56
SIZE	**CLASS**	**GROUP**
Not applicable	MHB	A and B

HAZARD
This material may liquefy if shipped at moisture content in excess of their transportable moisture limit (TML). See Section 7 of the Code.
Harmful and irritating by dust inhalation.

STOWAGE & SEGREGATION
"Separated from" foodstuffs and all class 8 materials (goods in packaged form and solid bulk materials).

HOLD CLEANLINESS
No special requirements.

WEATHER PRECAUTIONS
Keep cargo dry unless being loaded into a specially constructed or fitted ship.
May be loaded and discharged in rain, unless the moisture content is very close to the transportable moisture limit.

LOADING
Trim in accordance with cargo information required by SOLAS VI/2. If doubt exists, trim reasonably level to the boundaries of the cargo space so as to minimize the risk of shifting and to ensure that adequate stability will be maintained during the voyage.

PRECAUTIONS
Protective clothing should be worn, including goggles and facemasks, by persons involved in loading and discharging. Protect machinery, accommodation and bilge wells from dust.

VENTILATION
Ventilation not required.

CARRIAGE
No special requirements.

DISCHARGE
No special requirements.

CLEAN UP
No special requirements.

EMERGENCY PROCEDURES

SPECIAL EMERGENCY EQUIPMENT TO BE CARRIED Nil
EMERGENCY PROCEDURES Nil **EMERGENCY ACTION IN THE EVENT OF FIRE** Nil **MEDICAL FIRST AID** Refer to the Medical First Aid Guide (MFAG) as amended.

FLY ASH

DESCRIPTION
Fly Ash is the light, finely divided dusty fine powder residue from coal and oil fired power stations. Do not confuse with Calcined Pyrites.

CHARACTERISTICS

ANGLE OF REPOSE	BULK DENSITY (kg/m^3)	STOWAGE FACTOR (m^3/t)
Not applicable	794	1.26
SIZE	**CLASS**	**GROUP**
Not applicable	Not applicable	C

HAZARD
May shift when aerated.

This cargo is non-combustible or has a low fire-risk.

STOWAGE & SEGREGATION
To avoid contamination, this cargo should be "segregated from" all foodstuffs.

HOLD CLEANLINESS
Clean and dry.

WEATHER PRECAUTIONS
Do not load cargo during precipitation; keep dry, close hatches that are not being worked.

LOADING
Trim in accordance with cargo information required by SOLAS VI/2. If doubt exists, trim reasonably level to the boundaries of the cargo space so as to minimize the risk of shifting and to ensure that adequate stability will be maintained during the voyage.

Consideration should be given as to whether Fly Ash has had sufficient time to settle before sailing.

PRECAUTIONS
Ensure hold bilge wells are dry, taped up and made sift proof. Protect machinery, accommodation and equipment from dust ingress. Persons involved in loading should wear protective clothing, goggles and dust filter masks, if not a closed circuit loading.

VENTILATION
Ventilation not required.

CARRIAGE
Hatches must be sealed. Shut all vents and access ways. Do not pump bilges in Fly Ash holds unless absolutely necessary.

DISCHARGE

If using grabs and not discharging in a closed circuit system ensure the vessel is again protected against dust ingress and personnel are wearing the appropriate protective clothing, goggles and face masks. Protect the cargo from high humidity and moisture (rain) ingress.

CLEAN UP

Before wash down begins, holds, decks, houses, machinery etc. should be thoroughly swept. Pay particular attention to bilge wells and framework in holds. Then hose down and discharge in an appropriate manner.

GRANULATED SLAG

DESCRIPTION
Residue from steelworks blast furnaces with a dirty grey, lumpy appearance. Iron: 0.5%.

CHARACTERISTICS

ANGLE OF REPOSE	BULK DENSITY (kg/m^3)	STOWAGE FACTOR (m^3/t)
Not applicable	1111	0.90
SIZE	**CLASS**	**GROUP**
Up to 5 mm	Not applicable	C

HAZARD
No special hazards.

This cargo is non-combustible or has a low fire-risk.

STOWAGE & SEGREGATION
No special requirements.

HOLD CLEANLINESS
No special requirements.

WEATHER PRECAUTIONS
No special requirements.

LOADING
Trim in accordance with the cargo information required by SOLAS VI/2. If doubt exists, trim reasonably level to the boundaries of the cargo space so as to minimize the risk of shifting and to ensure that adequate stability will be maintained during the voyage.

The material should be loaded at a temperature acceptable to the ship.

PRECAUTIONS
Slag dust is fine and has abrasive characteristics. Protect machinery, accommodation and equipment from dust.

VENTILATION
Ventilation not required.

CARRIAGE
No special requirements.

DISCHARGE
No special requirements.

CLEAN UP
No special requirements.

GYPSUM

DESCRIPTION
A natural Hydrated Calcium Sulphate. Insoluble in water. It is loaded as a fine powder that aggregates into lumps. Gypsum is not water soluble. Average moisture content is 1% to 2%.

CHARACTERISTICS

ANGLE OF REPOSE	BULK DENSITY (kg/m^3)	STOWAGE FACTOR (m^3/t)
Not applicable	1282 - 1493	0.67 - 0.78
SIZE	**CLASS**	**GROUP**
Up to 100 mm	Not applicable	C

HAZARD
No special hazards.

This cargo is non-combustible or has a low fire-risk.

STOWAGE & SEGREGATION
No special requirements.

HOLD CLEANLINESS
No special requirements.

WEATHER PRECAUTIONS
Cargo should be protected from precipitation during handling operations and be kept as dry as reasonably practicable.

LOADING
Trim in accordance with the cargo information required by SOLAS VI/2. If doubt exists, trim reasonably level to the boundaries of the cargo space so as to minimize the risk of shifting and to ensure that adequate stability will be maintained during the voyage.

PRECAUTIONS
No special requirements.

VENTILATION
Ventilation not required.

CARRIAGE
No special requirements.

DISCHARGE
No special requirements.

CLEAN UP
Difficult to wash down. Ensure that decks and holds are shovelled and swept clean before hosing.

ILMENITE CLAY

DESCRIPTION
Very heavy black clay. Abrasive. May be dusty. Titanium, silicate and iron oxides are obtained from ilmenite clay. Moisture content: 10% to 20% .

CHARACTERISTICS

ANGLE OF REPOSE	BULK DENSITY (kg/m^3)	STOWAGE FACTOR (m^3/t)
Not applicable	2000 - 2500	0.4 - 0.5
SIZE	**CLASS**	**GROUP**
Up to 0.15 mm	Not applicable	A

HAZARD
The material may liquefy if shipped at a moisture content in excess of its Transportable Moisture Limit (TML).

This cargo is non-combustible or has a low fire-risk.

STOWAGE & SEGREGATION
No special requirements.

HOLD CLEANLINESS
No special requirements.

WEATHER PRECAUTIONS
Hatches should be closed in heavy rain if the moisture content of the cargo is sufficiently close to the TML that the rain could increase the moisture content beyond the TML. Further, the moisture content should be measured again if it is close to the TML.

LOADING
Moisture content should be below the TML. Reject wet material.

Trim in accordance with the cargo information required by SOLAS VI/2. If doubt exists, trim reasonably level to the boundaries of the cargo space so as to minimize the risk of shifting and to ensure that adequate stability will be maintained during the voyage.

As the density of the cargo is extremely high, care should be taken to ensure that the cargo is evenly spread across the tank top to equalize the weight distribution. Do not pile the cargo in the centre of the hatch during loading.

PRECAUTIONS
Bilge suction plates should be perforated and covered with two layers of burlap to protect bilge wells against sand ingress.

VENTILATION
Ventilation not required.

CARRIAGE
Ensure hatches are weathertight. Keep a careful check that cargo is not becoming fluid.

DISCHARGE
No special requirements.

CLEAN UP
No special requirements.

ILMENITE SAND
This cargo can be categorized as Group A or C. This entry is for cargo in Group C.

DESCRIPTION
Very heavy black sand. Abrasive. May be dusty. Titanium, monazite and zinc ore is obtained from ilmenite sand. Moisture content: 1% to 2% .

CHARACTERISTICS

ANGLE OF REPOSE	BULK DENSITY (kg/m^3)	STOWAGE FACTOR (m^3/t)
Not applicable	2380 - 3225	0.31 - 0.42
SIZE	**CLASS**	**GROUP**
Up to 0.15 mm	Not applicable	C

HAZARD
No special hazards.

This cargo is non-combustible or has a low fire-risk.

STOWAGE & SEGREGATION
No special requirements.

HOLD CLEANLINESS
No special requirements.

WEATHER PRECAUTIONS
Do not load cargo during precipitation; keep dry, close hatches that are not being worked.

LOADING
Trim in accordance with the cargo information required by SOLAS VI/2. If doubt exists, trim reasonably level to the boundaries of the cargo space so as to minimize the risk of shifting and to ensure that adequate stability will be maintained during the voyage.

As the density of the cargo is extremely high, care should be taken to ensure that the cargo is evenly spread across the tank top to equalize the weight distribution. Do not pile the cargo in the centre of the hatch during loading.

PRECAUTIONS
Bilge suction plates should be perforated and covered with two layers of burlap to protect bilge wells against sand ingress.

VENTILATION
Ventilation not required.

CARRIAGE
No special requirements.

DISCHARGE
No special requirements.

CLEAN UP
No special requirements.

IRON ORE

DESCRIPTION
Iron ore varies in colour from dark grey to rusty red. It varies in iron content from haematite, (high grade ore) to ironstone of the lower commercial ranges. Moisture content: 0% to 16%.

CHARACTERISTICS

ANGLE OF REPOSE	BULK DENSITY (kg/m^3)	STOWAGE FACTOR (m^3/t)
Not applicable	1250 - 3448	0.29 - 0.80
SIZE	**CLASS**	**GROUP**
Up to 250 mm	Not applicable	C

HAZARD
No special hazards.

This cargo is non-combustible or has a low fire-risk.

Iron ore cargoes may affect magnetic compasses.

STOWAGE & SEGREGATION
No special requirements.

HOLD CLEANLINESS
No special requirements.

WEATHER PRECAUTIONS
Prevent further increase of moisture content prior to and during loading, after the cargo has been tested for moisture content.

LOADING
Trim in accordance with the cargo information required by SOLAS VI/2. If doubt exists, trim reasonably level to the boundaries of the cargo space so as to minimize the risk of shifting and to ensure that adequate stability will be maintained during the voyage.

As the density of the cargo is extremely high, care should be taken to ensure that the cargo is evenly spread across the tank top to equalize the weight distribution. Do not pile the cargo in the centre of the hatch during loading.

Loading of concentrates should be suspended during significant rain or snow and hatches should be closed.

PRECAUTIONS
Normally, loading rates can be very high; preplanning of ballasting operation is essential.

VENTILATION
Ventilation not required.

CARRIAGE
No special requirements.

DISCHARGE
No special requirements.

CLEAN UP
No special requirements.

IRON ORE PELLETS

DESCRIPTION
Pellets are approximately spherical lumps formed by crushing iron ore into a powder. This iron oxide is formed into pellets by using clay as a binder and then hardening by firing in kilns at 1315°C. Moisture content: 0% to 2%.

CHARACTERISTICS

ANGLE OF REPOSE	BULK DENSITY (kg/m^3)	STOWAGE FACTOR (m^3/t)
Not applicable	1900-2400	0.45-0.52
SIZE	**CLASS**	**GROUP**
Up to 20 mm	Not applicable	C

HAZARD
No special hazards.

This cargo is non-combustible or has a low fire-risk.

STOWAGE & SEGREGATION
No special requirements.

HOLD CLEANLINESS
No special requirements.

WEATHER PRECAUTIONS
No special requirements.

LOADING
Trim in accordance with the cargo information required by SOLAS VI/2. If doubt exists, trim reasonably level to the boundaries of the cargo space so as to minimize the risk of shifting and to ensure that adequate stability will be maintained during the voyage. Refer to Sections 2 and 5 of this Code.

As the density of the cargo is extremely high, care should be taken to ensure that the cargo is evenly spread across the tank top to equalize the weight distribution. Do not pile ore in centre of hatch during loading.

Make sure bilge wells are covered with burlap.

PRECAUTIONS
No special requirements.

VENTILATION
Ventilation not required.

CARRIAGE
No special requirements.

DISCHARGE
No special requirements.

CLEAN UP
No special requirements.

IRON OXIDE, SPENT UN 1376

DESCRIPTION
Derived from coal gas purification. Powdery material, black, brown, red or yellow. Strong odour may taint other cargo.

CHARACTERISTICS

ANGLE OF REPOSE	BULK DENSITY (kg/m^3)	STOWAGE FACTOR (m^3/t)
Not applicable	2222	0.45
SIZE	**CLASS**	**GROUP**
Up to 20 mm	4.2	B

HAZARD
Liable to heat and ignite spontaneously, especially if contaminated with oil or moisture. Toxic gases: hydrogen sulphide, sulphur dioxide, and hydrogen cyanide may be produced. Dust may cause an explosion hazard. Liable to reduce the oxygen in the cargo space.

STOWAGE & SEGREGATION
"Separated from" foodstuffs.

HOLD CLEANLINESS
Clean and dry without any residue of previous cargoes.

WEATHER PRECAUTIONS
Do not handle cargo during precipitation; keep dry, close hatches that are not being worked.

LOADING
Trim the cargo in accordance with the cargo information required by SOLAS VI/2. If doubt exists, trim reasonably level to the boundaries of the cargo space so as to minimize the risk of shifting and to ensure that adequate stability will be maintained during the voyage.

As the density of the cargo is extremely high, care should be taken to ensure that the cargo is evenly spread across the tanktop to equalize the weight distribution. Do not pile the cargo in the centre of the hatch during loading.

PRECAUTIONS
A certificate should be given by the manufacturer or shipper to the Master stating the material has been cooled and then weathered for not less than 8 weeks prior to shipment. The certificate should be issued before loading commences.

VENTILATION
Surface ventilation required.

CARRIAGE
Suitable gas detectors for quantitative measurements of oxygen, hydrogen cyanide should be on board. Regularly monitor for oxygen, hydrogen sulphide, sulphur dioxide and hydrogen. Record and keep the measurements.

DISCHARGE
No special requirements.

CLEAN UP
No special requirements.

EMERGENCY PROCEDURES

SPECIAL EMERGENCY EQUIPMENT TO BE CARRIED Protective clothing (gloves, boots, coveralls, headgear). Self-contained breathing apparatus. Spray nozzles.
EMERGENCY PROCEDURES Wear protective clothing and self-contained breathing apparatus. **EMERGENCY ACTION IN THE EVENT OF FIRE** Batten down; use ship's fixed fire-fighting installation if available. Exclusion of air may be sufficient to control fire. **MEDICAL FIRST AID** Refer to the Medical First Aid Guide (MFAG) as amended.

IRONSTONE

DESCRIPTION
Ore. Moisture: 1% to 2%

CHARACTERISTICS

ANGLE OF REPOSE	BULK DENSITY (kg/m^3)	STOWAGE FACTOR (m^3/t)
Not applicable	2564	0.39
SIZE	**CLASS**	**GROUP**
75 mm	Not applicable	C

HAZARD
No special hazards.

This cargo is non-combustible or has a low fire-risk.

STOWAGE & SEGREGATION
No special requirements.

HOLD CLEANLINESS
No special requirements.

WEATHER PRECAUTIONS
No special requirements.

LOADING
Trim in accordance with the cargo information required by SOLAS VI/2. If doubt exists, trim reasonably level to the boundaries of the cargo space so as to minimize the risk of shifting and to ensure that adequate stability will be maintained during the voyage.

As the density of the cargo is extremely high, care should be taken to ensure that the cargo is evenly spread across the tanktop to equalize the weight distribution. Do not pile the cargo in the centre of the hatch during loading.

PRECAUTIONS
Protect machinery, accommodation and equipment from dust.

VENTILATION
Ventilation not required.

CARRIAGE
No special requirements.

DISCHARGE
No special requirements.

CLEAN UP
No special requirements.

LABRADORITE

DESCRIPTION
A lime-soda rock form of felspar. May give off dust.

CHARACTERISTICS

ANGLE OF REPOSE	BULK DENSITY (kg/m^3)	STOWAGE FACTOR (m^3/t)
Not applicable	1667	0.60
SIZE	**CLASS**	**GROUP**
Lumps: 50 mm - 300 mm	Not applicable	C

HAZARD
No special hazards.

This cargo is non-combustible or has a low fire-risk.

STOWAGE & SEGREGATION
No special requirements.

HOLD CLEANLINESS
Clean and dry.

WEATHER PRECAUTIONS
Do not load cargo during precipitation; keep dry, close hatches that are not being worked.

LOADING
Trim in accordance with the cargo information required by SOLAS VI/2. If doubt exists, trim reasonably level to the boundaries of the cargo space so as to minimize the risk of shifting and to ensure that adequate stability will be maintained during the voyage.

PRECAUTIONS
Protect machinery, accommodation and equipment from dust.

Persons involved in cargo handling should wear protective clothing, goggles and dust filter masks.

VENTILATION
Ventilation not required.

CARRIAGE
No special requirements.

DISCHARGE
No special requirements.

CLEAN UP
No special requirements.

LEAD NITRATE UN 1469

DESCRIPTION
White crystals. Soluble in water. Derived from the action of nitrate acid on lead.

CHARACTERISTICS

ANGLE OF REPOSE	BULK DENSITY (kg/m^3)		STOWAGE FACTOR (m^3/t)
Not applicable	Not applicable		Not applicable
SIZE	**CLASS**	**SUBSIDIARY RISK**	**GROUP**
Not applicable	5.1	6.1	B

HAZARD
Toxic if swallowed or dust inhaled.

Not combustible by itself, but mixtures with combustible materials, are easily ignited and burn fiercely.

STOWAGE & SEGREGATION
"Separated from" foodstuffs.

HOLD CLEANLINESS
Clean and dry without any residue of previous cargoes.

WEATHER PRECAUTIONS
Do not load cargo during precipitation, keep dry, close hatches that are not being worked.

LOADING
Trim the cargo in accordance with the cargo information required by SOLAS VI/2. If doubt exists, trim reasonably level to the boundaries of the cargo space so as to minimize the risk of shifting and to ensure that adequate stability will be maintained during the voyage.

PRECAUTIONS
Make sure bilge wells are dry and covered to prevent cargo ingress.

Persons involved in cargo handling should wear protective clothing, including goggles, and facemasks.

VENTILATION
Natural surface ventilation.

CARRIAGE
No special requirements.

DISCHARGE
Maintain personnel protection precautions.

CLEAN UP
No special requirements.

EMERGENCY PROCEDURES

SPECIAL EMERGENCY EQUIPMENT TO BE CARRIED

Protective clothing (gloves, coveralls, headgear).
Self-contained breathing apparatus.
Spray nozzles.

EMERGENCY PROCEDURES

Wear protective clothing and self-contained breathing apparatus.

EMERGENCY ACTION IN THE EVENT OF FIRE

Use copious quantities of water, which is best applied in the form of a spray to avoid disturbing the surface of the material. The material may fuse or melt, in which condition application of water may result in extensive scattering of the molten materials. Exclusion of air or the use of CO_2 will not control the fire. Due consideration should be given to the effect on the stability of the ship due to accumulated water.

MEDICAL FIRST AID

Refer to the Medical First Aid Guide (MFAG) as amended.

LEAD ORE

DESCRIPTION
Heavy soft grey solid material.

CHARACTERISTICS

ANGLE OF REPOSE	BULK DENSITY (kg/m^3)	STOWAGE FACTOR (m^3/t)
Not applicable	1493 - 4167	0.24 - 0.67
SIZE	**CLASS**	**GROUP**
Powder	Not applicable	C

HAZARD
Toxic, with acids evolves highly toxic vapour.

This cargo is non-combustible or has a low fire-risk.

STOWAGE & SEGREGATION
Separated from all class 8 liquids.

HOLD CLEANLINESS
Clean and dry without any residue of previous cargoes.

WEATHER PRECAUTIONS
Do not load cargo during precipitation, keep dry, close hatches that are not being worked.

LOADING
Trim in accordance with the cargo information required by SOLAS VI/2. If doubt exists, trim reasonably level to the boundaries of the cargo space so as to minimize the risk of shifting and to ensure that adequate stability will be maintained during the voyage.

As the density of the cargo is extremely high, care should be taken to ensure that the cargo is evenly spread across the tanktop to equalize the weight distribution. Do not pile the cargo in the centre of the hatch during loading.

PRECAUTIONS
No special requirements.

VENTILATION
Ventilation not required.

CARRIAGE
No special requirements.

DISCHARGE
No special requirements.

CLEAN UP
No special requirements.

LIME (UNSLAKED)

DESCRIPTION
White or greyish-white in colour.

CHARACTERISTICS

ANGLE OF REPOSE	BULK DENSITY (kg/m^3)	STOWAGE FACTOR (m^3/t)
Not applicable	Not applicable	Not applicable
SIZE	**CLASS**	**GROUP**
Lump	MHB	B

HAZARD
Unslaked lime combines with water to form calcium hydroxide (hydrated lime) or magnesium hydroxide. This reaction develops a great deal of heat which may be sufficient to cause ignition of nearby combustible materials. This is not combustible or has a low fire-risk corrosive to eyes and mucous membranes.

This cargo is non-combustible or has a low fire-risk.

STOWAGE & SEGREGATION
"Separated from" all packaged dangerous goods and solid bulk cargoes which possess a chemical hazard.

HOLD CLEANLINESS
Clean and dry.

WEATHER PRECAUTIONS
Do not load cargo during precipitation, keep dry, close hatches that are not being worked.

LOADING
Trim in accordance with the cargo information required by SOLAS VI/2. If doubt exists, trim reasonably level to the boundaries of the cargo space so as to minimize the risk of shifting and to ensure that adequate stability will be maintained during the voyage.

PRECAUTIONS
Must be kept dry. Make sure bilge wells are covered to prevent cargo ingress. Persons involved in cargo handling should wear protective clothing, goggles, dust filter masks.

VENTILATION
Ventilation not required.

CARRIAGE
No special requirements.

DISCHARGE
Do not discharge during precipitation.

CLEAN UP
No special requirements.

EMERGENCY PROCEDURES

SPECIAL EMERGENCY EQUIPMENT TO BE CARRIED Nil
EMERGENCY PROCEDURES Nil **EMERGENCY ACTION IN THE EVENT OF FIRE** Nil (non-combustible) Do not use water, if involved in a fire. **MEDICAL FIRST AID** Refer to the Medical First Aid Guide (MFAG) as amended.

LIMESTONE

DESCRIPTION
Limestone varies in colour from cream through white to medium dark grey (when freshly broken).
Moisture up to 4%.

CHARACTERISTICS

ANGLE OF REPOSE	BULK DENSITY (kg/m^3)	STOWAGE FACTOR (m^3/t)
Not applicable	1190 - 1493	0.67 - 0.84
SIZE	**CLASS**	**GROUP**
Fines to 90 mm	Not applicable	C

HAZARD
No special hazards.

This cargo is non-combustible or has a low fire-risk.

STOWAGE & SEGREGATION
No special requirements.

HOLD CLEANLINESS
No special requirements.

WEATHER PRECAUTIONS
No special requirements.

LOADING
Trim in accordance with the cargo information required by SOLAS VI/2. If doubt exists, trim reasonably level to the boundaries of the cargo space so as to minimize the risk of shifting and to ensure that adequate stability will be maintained during the voyage.

PRECAUTIONS
Ensure hold bilge wells are well covered and protected to prevent ingress.

VENTILATION
Ventilation not required.

CARRIAGE
No special requirements.

DISCHARGE
No special requirements.

CLEAN UP
No special requirements.

MAGNESIA (DEADBURNED)

DESCRIPTION
Manufactured in briquette form and is usually white, brown or grey. It is very similar in size, appearance and handling to gravel and is dry and dusty. Deadburned magnesia is natural magnesite calcined at very high temperatures, which results in a non-reactive magnesium oxide, which does not hydrate or produce spontaneous heat.

CHARACTERISTICS

ANGLE OF REPOSE	BULK DENSITY (kg/m^3)	STOWAGE FACTOR (m^3/t)
Not applicable	2000	0.5
SIZE	**CLASS**	**GROUP**
Fines to approx 30 mm	Not applicable	C

HAZARD
No special hazards.
This cargo is non-combustible or has a low fire-risk.

STOWAGE & SEGREGATION
No special requirements.

HOLD CLEANLINESS
No special requirements.

WEATHER PRECAUTIONS
No special requirements.

LOADING
Trim in accordance with the cargo information required by SOLAS VI/2. If doubt exists, trim reasonably level to the boundaries of the cargo space so as to minimize the risk of shifting and to ensure that adequate stability will be maintained during the voyage.

PRECAUTIONS
Prior to loading, a declaration should be provided by the manufacturer or shipper, stating that the material has been sufficiently heat-treated and is ready for loading.

VENTILATION
Ventilation not required.

CARRIAGE
No special requirements.

DISCHARGE
No special requirements.

CLEAN UP
No special requirements.

MAGNESIA (UNSLAKED)

DESCRIPTION

CHARACTERISTICS

ANGLE OF REPOSE	BULK DENSITY (kg/m^3)	STOWAGE FACTOR (m^3/t)
Not applicable	1250	0.80
SIZE	**CLASS**	**GROUP**
Fines to 90 mm	MHB	B

HAZARD
Combines with water to form magnesium hydroxide with an expansion in volume and a release of heat. May ignite materials with low ignition temperatures. Similar to LIME (UNSLAKED) but is less reactive. Corrosive to eyes and mucous membranes.

This cargo is non-combustible or has a low fire-risk.

STOWAGE & SEGREGATION
"Separated from" all packaged dangerous goods and all solid bulk cargoes, listed in this Code, which have chemical properties.

HOLD CLEANLINESS
Clean and dry.

WEATHER PRECAUTIONS
Do not load cargo during precipitation, keep dry, close hatches that are not being worked.

LOADING
Trim in accordance with the cargo information required by SOLAS VI/2. If doubt exists, trim reasonably level to the boundaries of the cargo space so as to minimize the risk of shifting and to ensure that adequate stability will be maintained during the voyage.

PRECAUTIONS
Persons involved in cargo handling should wear protective clothing, goggles and dust filter masks.

VENTILATION
Ventilation not required.

CARRIAGE
No special requirements.

DISCHARGE
Do not discharge during precipitation.

CLEAN UP
No special requirements.

EMERGENCY PROCEDURES

SPECIAL EMERGENCY EQUIPMENT TO BE CARRIED Nil
EMERGENCY PROCEDURES Nil **EMERGENCY ACTION IN THE EVENT OF FIRE** Nil (non-combustible) Do not use water if cargo is involved in a fire. **MEDICAL FIRST AID** Refer to the Medical First Aid Guide (MFAG) as amended.

MAGNESITE, natural

DESCRIPTION
Magnesite is white to yellow in colour.

CHARACTERISTICS

ANGLE OF REPOSE	BULK DENSITY (kg/m^3)	STOWAGE FACTOR (m^3/t)
Not applicable	1429	0.7
SIZE	**CLASS**	**GROUP**
3 mm - 30 mm	Not applicable	C

HAZARD
No special hazards.
This cargo is non-combustible or has a low fire-risk.

STOWAGE & SEGREGATION
No special requirements.

HOLD CLEANLINESS
No special requirements.

WEATHER PRECAUTIONS
No special requirements.

LOADING
Trim in accordance with the cargo information required by SOLAS VI/2. If doubt exists, trim reasonably level to the boundaries of the cargo space so as to minimize the risk of shifting and to ensure that adequate stability will be maintained during the voyage.

PRECAUTIONS
No special requirements.

VENTILATION
Ventilation not required.

CARRIAGE
No special requirements.

DISCHARGE
No special requirements.

CLEAN UP
No special requirements.

MAGNESIUM NITRATE UN 1474

DESCRIPTION
White crystals, soluble in water. Hygroscopic.

CHARACTERISTICS

ANGLE OF REPOSE	BULK DENSITY (kg/m^3)	STOWAGE FACTOR (m^3/t)
Not applicable	Not applicable	Not applicable
SIZE	**CLASS**	**GROUP**
Not applicable	5.1	B

HAZARD
Although non-combustible by itself, mixtures with combustible material are easily ignited and may burn fiercely.

STOWAGE & SEGREGATION
"Separated from" foodstuffs.

HOLD CLEANLINESS
Clean and dry without any residue of previous cargoes.

WEATHER PRECAUTIONS
No special requirements.

LOADING
Trim in accordance with the cargo information required by SOLAS VI/2. If doubt exists, trim reasonably level to the boundaries of the cargo space so as to minimize the risk of shifting and to ensure that adequate stability will be maintained during the voyage.

PRECAUTIONS
No special requirements.

VENTILATION
Ventilation not required.

CARRIAGE
No special requirements.

DISCHARGE
Magnesium nitrate is hygroscopic and will cake if wet. If cargo has hardened trimming may be necessary to avoid formation of overhanging faces.

CLEAN UP
No special requirements.

EMERGENCY PROCEDURES

SPECIAL EMERGENCY EQUIPMENT TO BE CARRIED Protective clothing (gloves, boots, coveralls, headgear). Self-contained breathing apparatus. Spray nozzles.
EMERGENCY PROCEDURES Wear protective clothing and self-contained breathing apparatus. **EMERGENCY ACTION IN THE EVENT OF FIRE** Use copious quantities of water, which is best applied in the form of a spray to avoid disturbing the surface of the material. The material may fuse or melt, in which condition application of water may result in extensive scattering of the molten materials. Exclusion of air or the use of CO_2 will not control the fire. Due consideration should be given to the effect on the stability of the ship due to the accumulated water. **MEDICAL FIRST AID** Refer to the Medical First Aid Guide (MFAG) as amended.

REMARKS
Material is non-combustible unless contaminated.

MANGANESE ORE

DESCRIPTION
Manganese ore is black to brownish black in colour. It is a very heavy cargo.
Moisture content: up to 15% .

CHARACTERISTICS

ANGLE OF REPOSE	BULK DENSITY (kg/m^3)	STOWAGE FACTOR (m^3/t)
Not applicable	1429 - 3125	fines - 0.32 lumps - 0.70
SIZE	**CLASS**	**GROUP**
Fine dust to 250 mm	Not applicable	C

HAZARD
No special hazards.
This cargo is non-combustible or has a low fire-risk.

STOWAGE & SEGREGATION
No special requirements.

HOLD CLEANLINESS
No special requirements.

WEATHER PRECAUTIONS
No special requirements.

LOADING
Trim in accordance with the cargo information required by SOLAS VI/2. If doubt exists, trim reasonably level to the boundaries of the cargo space so as to minimize the risk of shifting and to ensure that adequate stability will be maintained during the voyage.

As the density of the cargo is extremely high, care should be taken to ensure that the cargo is evenly spread across the tanktop to equalize the weight distribution. Do not pile the cargo in the centre of the hatch during loading.

PRECAUTIONS
Protect machinery, accommodation and equipment from dust.
Persons involved in cargo handling should wear protective clothing, goggles and dust filter masks.

VENTILATION
Ventilation not required.

CARRIAGE
No special requirements.

DISCHARGE
No special requirements.

CLEAN UP
No special requirements.

MARBLE CHIPS

DESCRIPTION
Dry, dusty, white to grey lumps, particles and powder mixed with a small amount of gravel and pebbles.

CHARACTERISTICS

ANGLE OF REPOSE	BULK DENSITY (kg/m^3)	STOWAGE FACTOR (m^3/t)
Not applicable	654	1.53
SIZE	**CLASS**	**GROUP**
Not applicable	Not applicable	C

HAZARD
No special hazards.

This cargo is non-combustible or has a low fire-risk.

STOWAGE & SEGREGATION
No special requirements.

HOLD CLEANLINESS
No special requirements.

WEATHER PRECAUTIONS
No special requirements.

LOADING
Trim in accordance with the cargo information required by SOLAS VI/2. If doubt exists, trim reasonably level to the boundaries of the cargo space so as to minimize the risk of shifting and to ensure that adequate stability will be maintained during the voyage.

PRECAUTIONS
Protect machinery, accommodation and equipment from dust.

Persons involved in cargo handling should wear protective clothing, goggles and dust filter masks.

VENTILATION
Ventilation not required.

CARRIAGE
No special requirements.

DISCHARGE
No special requirements.

CLEAN UP
No special requirements.

METAL SULPHIDE CONCENTRATES
(See also Mineral Concentrates schedule)

DESCRIPTION
Mineral concentrates are refined ores in which the valuable components have been enriched by eliminating the bulk of waste materials. Generally the particle size is small although agglomerates sometimes exist in concentrates which have not been freshly produced.

The most common concentrates in this category are; zinc concentrates, lead concentrates, copper concentrates and low grade middling concentrates.

CHARACTERISTICS

ANGLE OF REPOSE	BULK DENSITY (kg/m^3)	STOWAGE FACTOR (m^3/t)
Not applicable	1790 - 3230	0.31 - 0.56
SIZE	**CLASS**	**GROUP**
Various	MHB	A and B

HAZARD
Some sulphide concentrates are liable to oxidation and may have a tendency to self-heat, with associated oxygen depletion and emission of toxic fumes. Some materials may present corrosion problems.

When a Metal Sulphide Concentrate is considered as presenting a low fire-risk, the carriage of such cargo on a ship not fitted with a fixed gas fire extinguishing system should be subject to the Administration's authorization as provided by the provision of SOLAS regulation II-2/10.7.1.4.

STOWAGE & SEGREGATION
Unless determined by the competent authority, segregation as required for class 4.2 materials.

"Separated from" foodstuffs and all class 8 acids.

HOLD CLEANLINESS
Clean and dry without any residue of previous cargoes.

WEATHER PRECAUTIONS
Keep cargo dry. Refer to section 7 of the Code.

LOADING
Loading should be closely supervised to minimise exposure to dust. Depending upon the advice of the shipper or the competent authority the following precautions should be followed:

1. Oxygen stimulates the process of oxidation and self-heating, and thus ventilation of the material should be avoided. Oxidation may also be inhibited by compaction of the material or restricting the ingress of air by carefully covering it with plastic sheeting;

2. To decrease the effects of oxidation, material should be reasonably levelled following loading; and

3. Entry by personnel into cargo spaces containing such materials should not be permitted until the master of the ship or the responsible officer is satisfied that it is safe to do so after taking into account all safety precautions.

Trim in accordance with the cargo information required by SOLAS VI/2. If doubt exists:

(i) Cargoes should be trimmed, so as to reach all boundaries of each compartment and levelled within the square of the hatch so that the height difference between peaks and troughs do not exceed 5% of the ship's breadth.

The cargo should slope uniformly from the hatch boundaries to the bulkheads and no shearing faces should remain to collapse during voyage.

(ii) The trimming of concentrate should be such that in addition to (i), the height difference between the peaks and troughs of the cargo should not exceed 5% of the ship's breadth in the athwartships direction for the full width of the hold.

(iii) The above and in particular (ii) applies especially to smaller ships, i.e., 100 m long or less, and consequently the loading of smaller ships requires careful supervision. In such ships the aim should be to distribute the cargo so as to eliminate the formation of wide, steeply sloped voids beyond the trimmed surface within the area of the hatch square.

(iv) As the density of the cargo is extremely high, care should be taken to ensure that the cargo is evenly spread across the tanktop to equalize the weight distribution. Do not pile the cargo in the centre of the hatch during loading.

(v) Loading of concentrates should be suspended during continuous or heavy rain or snow and cargo spaces hatches closed. Refer to section 7 of the Code.

PRECAUTIONS
Beware of oxidation. Ventilate and test atmosphere before entry into holds. Breathing apparatus should be used. As particle size, T.M.L. and possibility of oxidation and self-heating are vital factors in the carriage of concentrates, the master must ensure that he has all relevant information from the shipper before loading.

VENTILATION
Do not ventilate.

CARRIAGE
Ensure that hatches remain weathertight. Keep a careful check that cargo is not becoming fluid. Suitable detectors for quantitative measurements of oxygen and toxic fumes liable to be evolved by the cargo should be on board. Hold oxygen and toxic fume, levels should be regularly monitored and a record kept of observations.

DISCHARGE
No special requirements.

CLEAN UP
No special requirements.

EMERGENCY PROCEDURES

SPECIAL EMERGENCY EQUIPMENT TO BE CARRIED Self-contained breathing apparatus
EMERGENCY PROCEDURES Wear self-contained breathing apparatus. **EMERGENCY ACTION IN THE EVENT OF FIRE** Batten down; use ship's fixed fire-fighting installation. Exclusion of air may be sufficient to control the fire. **Do not use water.** **MEDICAL FIRST AID** Refer to the Medical First Aid Guide (MFAG) as amended.

REMARKS
Fire may be indicated by the smell of sulphur dioxide.

Mineral Concentrates

(See Bulk Cargo Shipping Names below)

CEMENT COPPER
COPPER CONCENTRATE
IRON CONCENTRATE
IRON CONCENTRATE (pellet feed)
IRON CONCENTRATE (sinter feed)
LEAD AND ZINC CALCINES (mixed)
LEAD AND ZINC MIDDLINGS
LEAD CONCENTRATE
LEAD ORE RESIDUE
LEAD SILVER CONCENTRATE
MANGANESE CONCENTRATE
NEFELENE SYENITE (mineral)
NICKEL CONCENTRATE
PENTAHYDRATE CRUDE
PYRITES
PYRITIC ASHES (iron)
PYRITIC CINDERS
SILVER LEAD CONCENTRATE
SLIG (iron ore)
ZINC AND LEAD CALCINES (mixed)
ZINC AND LEAD MIDDLINGS
ZINC CONCENTRATE
ZINC SINTER
ZINC SLUDGE

All known Bulk Cargo Shipping Names (BCSN) of mineral concentrates are listed above but the list is not exhaustive. See also the entries for Metal Sulphide Concentrates.

DESCRIPTION
Mineral concentrates are refined ores in which valuable components have been enriched by eliminating the bulk of waste materials.

CHARACTERISTICS

ANGLE OF REPOSE	BULK DENSITY (kg/m^3)	STOWAGE FACTOR (m^3/t)
Not applicable	1754 - 3030	0.33 - 0.57
SIZE	**CLASS**	**GROUP**
Various	Not applicable	A

HAZARD
The above materials may liquefy if shipped at moisture content in excess of their transportable moisture limit (TML). See section 7 of the Code.
These cargoes are non-combustible or have low fire-risks.

STOWAGE & SEGREGATION
No special requirements.

HOLD CLEANLINESS
No special requirements.

WEATHER PRECAUTIONS
Keep cargo dry unless being loaded into a specially constructed or fitted ship.

May be loaded and discharged in rain, unless the moisture content is very close to the transportable moisture limit.

LOADING
Trim in accordance with the cargo information required by SOLAS VI/2. If doubt exists:

Refer to section 7 of this Code, for information about cargoes, which may liquefy.

(i) Cargoes should be trimmed, so as to reach all boundaries of each compartment and levelled within the square of the hatch so that the height difference between peaks and troughs do not exceed 5% of the ship's breadth.

The cargo should slope uniformly from the hatch boundaries to the bulkheads and no shearing faces should remain to collapse during voyage.

(ii) The trimming of concentrate should be such that in addition to (i), the height difference between the peaks and troughs of the cargo should not exceed 5% of the ship's breadth in the athwartships direction for the full width of the hold.

(iii) The above and in particular (ii) applies especially to smaller ships, i.e., 100 m long or less, and consequently the loading of smaller ships requires careful supervision. In such ships the aim should be to distribute the cargo so as to eliminate the formation of wide, steeply sloped voids beyond the trimmed surface within the area of the hatch square.

(iv) As the density of the cargo is extremely high, care should be taken to ensure that the cargo is evenly spread across the tanktop to equalize the weight distribution. Do not pile the cargo in the centre of the hatch during loading.

(v) Loading of concentrates should be suspended during continuous or heavy rain or snow and cargo spaces, hatches should be closed.

PRECAUTIONS
Bilge wells should be clean, dry and covered to prevent the ingress of cargo. Bilge system should be tested to ensure it is working.

VENTILATION
Do not ventilate.

CARRIAGE
Ensure hatches remain weathertight. Keep a careful check that cargo is not becoming fluid.

DISCHARGE
No special requirements.

CLEAN UP
No special requirements.

MONOAMMONIUM PHOSPHATE (M.A.P.)

DESCRIPTION
MAP is odourless and comes in the form of brownish-grey granules. It can be very dusty. Hygroscopic.

CHARACTERISTICS

ANGLE OF REPOSE	BULK DENSITY (kg/m^3)	STOWAGE FACTOR (m^3/t)
35° - 40°	826 - 1000	1.0 - 1.21
SIZE	**CLASS**	**GROUP**
Not applicable	Not applicable	C

HAZARD
Bulk MAP has a pH of 4.5 and in the presence of moisture content can be highly corrosive.

This cargo is non-combustible or has a low fire-risk.

STOWAGE & SEGREGATION
No special requirements.

HOLD CLEANLINESS
Clean and dry without any residue of previous cargoes.

WEATHER PRECAUTIONS
Do not handle cargo during precipitation; keep dry, close hatches that are not being worked.

LOADING
Trim the cargo in accordance with the cargo information required by SOLAS VI/2. If doubt exists, trim reasonably level to the boundaries of the cargo space so as to minimize the risk of shifting and to ensure that adequate stability will be maintained during the voyage.

PRECAUTIONS
Protect machinery, accommodation and equipment from dust.

Persons involved in cargo handling should wear protective clothing, goggles and dust filter masks.

VENTILATION
Do not ventilate.

CARRIAGE
Condensation, cargo sweating and leaking hatch covers must be carefully watched. Pay close attention to hatch sealing.

This cargo will decompose burlap or canvas cloth covering bilge wells. Continuous carriage may have detrimental structural effects over a long period of time.

DISCHARGE
MAP is hygroscopic and will cake if wet. Trimming may be necessary to avoid the formation of overhanging cargo faces. Maintain personnel protection precautions.

CLEAN UP
Pay particular attention to bilge wells when cleaning.

PEANUTS (in shell)

DESCRIPTION
An edible, tan coloured nut. Variable moisture content. Extremely dusty.

CHARACTERISTICS

ANGLE OF REPOSE	BULK DENSITY (kg/m^3)	STOWAGE FACTOR (m^3/t)
Not applicable	304	3.29
SIZE	**CLASS**	**GROUP**
Not applicable	Not applicable	C

HAZARD
May heat spontaneously.

This cargo is non-combustible or has a low fire-risk.

STOWAGE & SEGREGATION
No special segregation precautions.

Stow away from heat sources.

HOLD CLEANLINESS
Clean and dry without any residue of previous cargoes.

WEATHER PRECAUTIONS
No special requirements.

LOADING
Trim in accordance with the cargo information required by SOLAS VI/2. If doubt exists, trim reasonably level to the boundaries of the cargo space so as to minimize the risk of shifting and to ensure that adequate stability will be maintained during the voyage.

PRECAUTIONS
Protect machinery, accommodation and equipment from dust.

VENTILATION
Natural or mechanical surface ventilation required.

CARRIAGE
No special requirements.

DISCHARGE
No special requirements.

CLEAN UP
No special requirements.

PEAT MOSS

DESCRIPTION

Surface mined from mires, bogs, fens, muskeg and swamps. Types include moss peat, sedge peat and grass peat. Physical properties depend on organic matter, water and air content, botanical decomposition and degree of decomposition.

May range from a highly fibrous cohesive mass of plant remains which when squeezed in its natural state exudes clear to slightly coloured water, to a well decomposed, largely amorphous material with little or no separation of liquid from solids when squeezed.

Typically air-dried peat has low density, high compressibility and high water content; in its natural state it can hold 90 percent or more of water by weight of water when saturated.

CHARACTERISTICS

ANGLE OF REPOSE	BULK DENSITY (kg/m^3)	STOWAGE FACTOR (m^3/t)
Not applicable	80 - 500	2 - 12.5
SIZE	**CLASS**	**GROUP**
Fine Powder	MHB	A and B

HAZARD

Oxygen depletion and an increase in carbon dioxide in cargo and adjacent spaces.

Risk of dust explosion when loading. Caution should be exercised when walking or landing heavy machinery on the surface of uncompressed Peat Moss.

Peat Moss having a moisture content of more than 80% by weight should only be carried on specially fitted or constructed ships (see paragraphs 7.2.2 to 7.2.4 of this Code).

Dust may cause eye, nose and respiratory irritation.

STOWAGE & SEGREGATION

No special requirements.

HOLD CLEANLINESS

Clean and dry without any residue of previous cargoes.

WEATHER PRECAUTIONS

Prior to loading, the cargo should be stockpiled under cover to effect drainage and reduce moisture.

Do not load cargo during precipitation, keep dry, close hatches that are not being worked.

LOADING
Trim in accordance with the cargo information required by SOLAS VI/2. If doubt exists, trim reasonably level to the boundaries of the cargo space so as to minimize the risk of shifting and to ensure that adequate stability will be maintained during the voyage.

PRECAUTIONS
Sweep clean and clear of residues of previous cargo. Make sure bilge wells are clean and efficient.

Persons involved in loading or discharging should wear protective clothing, gloves, dust masks and goggles. Wash hands before eating or smoking. Treat cuts and scrapes promptly.

Entry of personnel into cargo spaces should not be permitted until tests have been carried out and it has been established that the oxygen content has been restored to a normal level.

VENTILATION
Natural or mechanical surface ventilation.

CARRIAGE
No special requirements.

DISCHARGE
Maintain personnel protection precautions.

CLEAN UP
No special precautions.

EMERGENCY PROCEDURES

SPECIAL EMERGENCY EQUIPMENT TO BE CARRIED Nil
EMERGENCY PROCEDURES Nil **EMERGENCY ACTION IN THE EVENT OF FIRE** Batten down; use ship's fixed fire-fighting installation if fitted. Exclusion of air may be sufficient to control fire. **MEDICAL FIRST AID** Refer to the Medical First Aid Guide (MFAG) as amended.

PEBBLES (sea)

DESCRIPTION
Round pebbles. Rolls very easily.

CHARACTERISTICS

ANGLE OF REPOSE	BULK DENSITY (kg/m^3)	STOWAGE FACTOR (m^3/t)
Not applicable	1695	0.59
SIZE	**CLASS**	**GROUP**
30 mm - 110 mm	Not applicable	C

HAZARD
No special hazards.

This cargo is non-combustible or has a low fire-risk.

STOWAGE & SEGREGATION
No special requirements.

HOLD CLEANLINESS
No special requirements.

WEATHER PRECAUTIONS
No special requirements.

LOADING
Trim in accordance with the cargo information required by SOLAS VI/2. If doubt exists, trim reasonably level to the boundaries of the cargo space so as to minimize the risk of shifting and to ensure that adequate stability will be maintained during the voyage.

PRECAUTIONS
Overstow pebbles with a layer of sacks.

VENTILATION
Ventilation not required.

CARRIAGE
No special requirements.

DISCHARGE
No special requirements.

CLEAN UP
No special requirements.

PELLETS (concentrates)

DESCRIPTION
Concentrate ore which has been pelletized. Moisture up to 6%.

CHARACTERISTICS

ANGLE OF REPOSE	BULK DENSITY (kg/m^3)	STOWAGE FACTOR (m^3/t)
Not applicable	2128	0.47
SIZE	**CLASS**	**GROUP**
10 mm approximately	Not applicable	C

HAZARD
No special hazards.

This cargo is non-combustible or has a low fire-risk.

STOWAGE & SEGREGATION
No special requirements.

HOLD CLEANLINESS
Clean and dry.

WEATHER PRECAUTIONS
No special requirements.

LOADING
Trim in accordance with the cargo information required by SOLAS VI/2. If doubt exists, trim reasonably level to the boundaries of the cargo space so as to minimize the risk of shifting and to ensure that adequate stability will be maintained during the voyage.

PRECAUTIONS
No special requirements.

VENTILATION
Ventilation not required.

CARRIAGE
No special requirements.

DISCHARGE
No special requirements.

CLEAN UP
No special requirements.

PERLITE ROCK

DESCRIPTION
Clay-like and dusty. Light grey. Odourless. Moisture: 0.5% to 1%

CHARACTERISTICS

ANGLE OF REPOSE	BULK DENSITY (kg/m^3)	STOWAGE FACTOR (m^3/t)
Not applicable	943 - 1020	0.98 - 1.06
SIZE	**CLASS**	**GROUP**
Not applicable	Not applicable	C

HAZARD
No special hazards.

This cargo is non-combustible or has a low fire-risk.

STOWAGE & SEGREGATION
No special requirements.

HOLD CLEANLINESS
No special requirements.

WEATHER PRECAUTIONS
No special requirements.

LOADING
Trim in accordance with the cargo information required by SOLAS VI/2. If doubt exists, trim reasonably level to the boundaries of the cargo space so as to minimize the risk of shifting and to ensure that adequate stability will be maintained throughout the voyage.

PRECAUTIONS
Protect machinery, accommodation and equipment from dust.
Persons involved in cargo handling should wear protective clothing, goggles and dust filter masks.

VENTILATION
Ventilation not required.

CARRIAGE
No special requirements.

DISCHARGE
No special requirements.

CLEAN UP
No special requirements.

PETROLEUM COKE (calcined or uncalcined)

DESCRIPTION
Black, finely divided residue from petroleum refining in the form of powder and small pieces. The provisions of this schedule should not apply to materials having a temperature below 55°C when loaded.

CHARACTERISTICS

ANGLE OF REPOSE	BULK DENSITY (kg/m^3)	STOWAGE FACTOR (m^3/t)
Not applicable	599 - 800	1.25 - 1.67
SIZE	**CLASS**	**GROUP**
Powder to small pieces	MHB	B

HAZARD
Uncalcined petroleum coke is liable to heat and ignite spontaneously when not loaded and transported under the provisions of this entry.

This cargo is non-combustible or has a low fire-risk.

STOWAGE & SEGREGATION
"Separated from" foodstuffs.

"Separated longitudinally by an intervening complete compartment or hold from" all goods of class 1, Divisions 1.1 and 1.5.

"Separated by a complete compartment or hold from" all other hazardous materials and dangerous goods (goods in packaged form and solid bulk materials).

HOLD CLEANLINESS
Clean and dry without any residue of previous cargoes.

WEATHER PRECAUTIONS
No special requirements.

LOADING
1. In cargo spaces over tanks containing fuel or material having a flashpoint under 93°C, a layer of 0.6 m to 1.0 m, of the material at a temperature not greater than 44°C should first be loaded into the cargo space. Only then may the material, at 55°C or above, be loaded into that cargo space.

2. The loading of the material should be as follows:

   .1 for shipments in cargo spaces over fuel tanks, the loading of the 0.6 m to 1.0 m layer at a temperature not greater than 44°C (as required in 1) should be completed prior to the loading of the material at 55°C or above in any cargo space of the ship.

.2 upon completion of the loading described in 2.1, a layer of 0.6 m to 1.0 m of the material at 55°C or above should first be loaded in each cargo space (including those cargo spaces, if any, already containing a layer of the material at a temperature not greater than 44°C) in which the material is to be loaded in accordance with this entry.

.3 upon the completion of the loading of the 0.6 m to 1.0 m layer of material at 55°C or above in each cargo space (as required by 2.2), the normal loading of the material at 55°C or above may proceed to completion.

.4 personnel should be warned by the master of the ship that petroleum coke loaded and transported under this entry is hot and that injury due to burns is possible if precautions are not taken.

Trim in accordance with the cargo information required by SOLAS VI/2. If doubt exists, trim reasonably level to the boundaries of the cargo space so as to minimize the risk of shifting and to ensure that adequate stability will be maintained during the voyage.

PRECAUTIONS
Should not be loaded if the temperature exceeds 107°C.

VENTILATION
Ventilation not required.

CARRIAGE
No special requirements.

DISCHARGE
Personnel should be warned by the master of the ship that petroleum coke loaded and transported under this entry is hot and that injury due to burns is possible if precautions are not taken.

CLEAN UP
No special requirements.

EMERGENCY PROCEDURES

SPECIAL EMERGENCY EQUIPMENT TO BE CARRIED Protective clothing (gloves, boots, coveralls, headgear). Self-contained breathing apparatus. Spray nozzles.
EMERGENCY PROCEDURES Wear protective clothing and self-contained breathing apparatus. **EMERGENCY ACTION IN THE EVENT OF FIRE** Batten down; use of ship's fixed fire-fighting installation if available. Exclusion of air may be sufficient to control fire. **MEDICAL FIRST AID** Refer to the Medical First Aid Guide (MFAG) as amended.

PHOSPHATE (defluorinated)

DESCRIPTION
Granular, similar to fine sand. Shipped dry. Dark grey. No moisture content.

CHARACTERISTICS

ANGLE OF REPOSE	BULK DENSITY (kg/m^3)	STOWAGE FACTOR (m^3/t)
Not applicable	893	1.12
SIZE	**CLASS**	**GROUP**
Not applicable	Not applicable	C

HAZARD
No special hazards.

This cargo is non-combustible or has a low fire-risk.

STOWAGE & SEGREGATION
No special requirements.

HOLD CLEANLINESS
No special requirements.

WEATHER PRECAUTIONS
No special requirements.

LOADING
Trim in accordance with the cargo information required by SOLAS VI/2. If doubt exists, trim reasonably level to the boundaries of the cargo space so as to minimize the risk of shifting and to ensure that adequate stability will be maintained during the voyage.

PRECAUTIONS
Protect machinery, accommodation and equipment from dust ingress.

VENTILATION
Ventilation not required.

CARRIAGE
No special requirements.

DISCHARGE
No special requirements.

CLEAN UP
No special requirements.

PHOSPHATE ROCK (calcined)

DESCRIPTION
Usually in the form of fine ground rock or prills. Extremely dusty. Hygroscopic.

CHARACTERISTICS

ANGLE OF REPOSE	BULK DENSITY (kg/m^3)	STOWAGE FACTOR (m^3/t)
Not applicable	794 - 1563	0.64 - 1.26
SIZE	**CLASS**	**GROUP**
Not applicable	Not applicable	C

HAZARD
No special hazards.

This cargo is non-combustible or has a low fire-risk.

STOWAGE & SEGREGATION
No special requirements.

HOLD CLEANLINESS
No special requirements.

WEATHER PRECAUTIONS
Do not load cargo during precipitation; keep dry, close hatches that are not being worked.

LOADING
Trim in accordance with the cargo information required by SOLAS VI/2. If doubt exists, trim reasonably level to the boundaries of the cargo space so as to minimize the risk of shifting and to ensure that adequate stability will be maintained during the voyage.

PRECAUTIONS
Protect machinery, accommodation and equipment from dust. Personnel involved in cargo handling should wear protective clothing, goggles and dust filter masks.

VENTILATION
Ventilation not required.

CARRIAGE
No special requirements.

DISCHARGE
Phosphate rock is hygroscopic and will cake if wet. If cargo has hardened, trimming may be necessary to avoid formation of overhanging faces.

CLEAN UP
No special requirements.

PHOSPHATE ROCK (uncalcined)

DESCRIPTION
Phosphate rock is an ore in which phosphorus and oxygen are chemically united. Depending on the source, it is tan to dark grey, dry and dusty. Moisture: 0% to 2%.

CHARACTERISTICS

ANGLE OF REPOSE	BULK DENSITY (kg/m^3)	STOWAGE FACTOR (m^3/t)
Not applicable	1250-1429	0.70 - 0.80
SIZE	**CLASS**	**GROUP**
Powder to lumps	Not applicable	C

HAZARD
No special hazards.

This cargo is non-combustible or has a low fire-risk.

STOWAGE & SEGREGATION
No special requirements.

HOLD CLEANLINESS
No special requirements.

WEATHER PRECAUTIONS
No special requirements.

LOADING
Trim in accordance with the cargo information required by SOLAS VI/2. If doubt exists, trim reasonably level to the boundaries of the cargo space so as to minimize the risk of shifting and to ensure that adequate stability will be maintained during the voyage.

PRECAUTIONS
Depending on its source this cargo may have a low angle of repose, but once settled it is not liable to shift. Protect machinery, accommodation and equipment from dust. Personnel involved in cargo handling should wear protective clothing, goggles and dust filter masks.

VENTILATION
Ventilation not required.

CARRIAGE
No special requirements.

DISCHARGE
No special requirements.

CLEAN UP
No special requirements.

PIG IRON

DESCRIPTION
Foundry pig iron is cast in 28 grades into 20 kg pigs. In a random heap, pig iron occupies approximately 50% of the apparent volume.

CHARACTERISTICS

ANGLE OF REPOSE	BULK DENSITY (kg/m^3)	STOWAGE FACTOR (m^3/t)
Not applicable	3333 - 3571	0.28 - 0.30
SIZE	**CLASS**	**GROUP**
550 mm x 90 mm x 80 mm.	Not applicable	C

HAZARD
No special hazards.

This cargo is non-combustible or has a low fire-risk.

STOWAGE & SEGREGATION
No special requirements.

HOLD CLEANLINESS
No special requirements.

WEATHER PRECAUTIONS
No special requirements.

LOADING
Pig iron is usually loaded from tubs. These are lowered by a crane into the hold and the contents spilled out. The first few tubs should be lowered onto the tank top to avoid damage. Bulldoze under overhangs and into the wings.

As the density of the cargo is extremely high, care should be taken to ensure that the cargo is evenly spread across the tanktop to equalize the weight distribution. Do not pile the cargo in the centre of the hatch during loading.

Trim in accordance with the cargo information required by SOLAS VI/2. If doubt exists trim reasonably level to the boundaries of the cargo space so as to minimize the risk of shifting and to ensure that adequate stability will be maintained during the voyage.

PRECAUTIONS
Check vessel stability and stresses.

Precautions which should be taken:

1. When the cargo is loaded, bulldozers may be used to trim the cargo reasonably level to the boundaries of the cargo space.

2. To avoid excessive stress, pig iron, if possible should not be stowed in the 'tween decks' unless in tubs or bolsters. The amount of the cargo depends on the ship's stability requirements, bolsters or tubs available and 'tween deck' loading limitations.

3. Any bolsters or tubs stowed on steel decks require dunnage under them and suitable lashings.

VENTILATION
Mechanical surface ventilation required.

CARRIAGE
No special requirements.

DISCHARGE
No special requirements.

CLEAN UP
Clean out bilge wells and cover with burlap.

PITCH PRILL

DESCRIPTION
Pitch Prill is made from tar produced during the coking of coal. It is black with a distinctive odour. It is extruded into its characteristic pencil shape to make handling easier.

Cargo softens between 40ºC to 50ºC. Melting point: 105ºC to 107ºC

CHARACTERISTICS

ANGLE OF REPOSE	BULK DENSITY (kg/m^3)	STOWAGE FACTOR (m^3/t)
Not applicable	500 - 800	1.25 - 2.0
SIZE	**CLASS**	**GROUP**
9 mm dia. and up to 0.7 cm long	MHB	B

HAZARDS
Melts when heated. Combustible, burns with a dense black smoke. Dust may cause skin and eye irritation. Normally this cargo has a low fire-risk. However powder of the cargo is easy to ignite and may cause fire and explosion. Special care should be taken for preventing fire during loading or discharging.

STOWAGE & SEGREGATION
Segregation as required for class 4.1 materials.

HOLD CLEANLINESS
No special requirements.

WEATHER PRECAUTIONS
See the appendix to this schedule.

LOADING
Trim in accordance with the cargo information required by SOLAS VI/2. If doubt exists, trim reasonably level to the boundaries of the cargo space so as to minimize the risk of shifting and to ensure that adequate stability will be maintained during the voyage.

Heated tanks should be dunnaged to avoid softening and melting of the cargo.

PRECAUTIONS
See the appendix to this schedule.

VENTILATION
Natural or mechanical surface ventilation.

CARRIAGE
Tape hatches. Check for condensation.

DISCHARGE
Wash ship down frequently to keep dust to an absolute minimum.

CLEAN UP
No special requirements.

EMERGENCY PROCEDURES

SPECIAL EMERGENCY EQUIPMENT TO BE CARRIED
Protective clothing, gloves, boots, overalls, and headgear. Self-contained breathing apparatus, spray nozzles.
EMERGENCY PROCEDURES
Wear protective clothing and self contained breathing apparatus.
EMERGENCY ACTION IN THE EVENT OF A FIRE
Batten down: use ship's fixed fire-fighting installation if available. Exclusion of air may be sufficient to control fire.
MEDICAL FIRST AID
Refer to Medical First Aid Guide (MFAG) as amended.

APPENDIX

PITCH PRILL

General Precautions which should be observed:

1. Personnel engaged in loading are to be supplied with gloves, dust masks, approved protective clothing and goggles.

2. Eyewashes and sun screen creams are to be readily available.

3. Keep personnel in area of loading to a minimum. Make sure that they are aware of all the hazards involved.

4. Personnel engaged in the handling of pencil pitch should wash well and keep out of the sun for a few days.

5. Close the hatch after loading or discharge has ceased and hose down the ship to remove all dust.

6. If wind is blowing dust about it is recommended that loading or discharging should cease.

7. Clean up all spillages about the decks.

8. Accommodation ventilation should be closed. Air conditioning systems should be on re-cycle mode when this cargo is being handled - either loading or discharging.

9. The cargo dust is easily ignited and may cause fire and explosion. Special care should be taken to prevent fire during loading and discharging the cargo.

POTASH

DESCRIPTION
Brown, pink or white in colour, potash is produced in granular crystals. It is odourless and hygroscopic.

CHARACTERISTICS

ANGLE OF REPOSE	BULK DENSITY (kg/m^3)	STOWAGE FACTOR (m^3/t)
32° - 35°	971 - 1299	0.77 - 1.03
SIZE	**CLASS**	**GROUP**
Powder to 4 mm	Not applicable	C

HAZARD
No special hazards.

This cargo is non-combustible or has a low fire-risk.

STOWAGE & SEGREGATION
No special requirements.

HOLD CLEANLINESS
No special requirements.

WEATHER PRECAUTIONS
Do not load cargo during precipitation; keep dry, close hatches that are not being worked.

LOADING
Trim in accordance with the cargo information required by SOLAS VI/2. If doubt exists, trim reasonably level to the boundaries of the cargo space so as to minimize the risk of shifting and to ensure that adequate stability will be maintained during the voyage.

PRECAUTIONS
No special requirements.

VENTILATION
Surface ventilation required.

CARRIAGE
Seal hatches to prevent water ingress, if necessary.

DISCHARGE
Potash is hygroscopic and will cake if wet. If cargo has hardened, trimming may be necessary to avoid the formation of overhanging faces.

CLEAN UP
Potash is mildly corrosive. Sweep clean and thoroughly wash out holds and bilge wells.

POTASSIUM CHLORIDE

DESCRIPTION
Brown, pink or white in colour, powder. Potassium Chloride is produced in granular crystals. It is odourless and is soluble in water. Hygroscopic.

CHARACTERISTICS

ANGLE OF REPOSE	BULK DENSITY (kg/m^3)	STOWAGE FACTOR (m^3/t)
30° - 47°	893 - 1235	0.81 - 1.12
SIZE	**CLASS**	**GROUP**
Up to 4 mm	Not applicable	C

HAZARD
Potassium Chloride is corrosive when wet.

This cargo is non-combustible or has a low fire-risk.

STOWAGE & SEGREGATION
No special requirements.

HOLD CLEANLINESS
Clean and dry without any residue of previous cargoes.

WEATHER PRECAUTIONS
Do not handle cargo during precipitation; keep dry, close hatches that are not being worked.

LOADING
Trim in accordance with the cargo information required by SOLAS VI/2. If doubt exists, trim reasonably level to the boundaries of the cargo space so as to minimize the risk of shifting and to ensure that adequate stability will be maintained during the voyage.

PRECAUTIONS
No special requirements.

VENTILATION
Do not ventilate.

CARRIAGE
Seal hatches to prevent water ingress.

DISCHARGE
Potassium Chloride is hygroscopic and will cake if wet. Trimming may be necessary to avoid the formation of overhanging cargo faces.

CLEAN UP
Sweep clean and thoroughly wash out holds and bilge wells.

POTASSIUM NITRATE UN 1486

DESCRIPTION
Transparent, colourless or white crystalline powder or crystals. Hygroscopic.

CHARACTERISTICS

ANGLE OF REPOSE	BULK DENSITY (kg/m^3)	STOWAGE FACTOR (m^3/t)
30° - 31°	1136	0.88
SIZE	**CLASS**	**GROUP**
Crystals or powder	5.1	B

HAZARD
Oxidizes when wet. Mixtures with combustible materials are readily ignited and may burn fiercely.

STOWAGE & SEGREGATION
"Separated from" foodstuffs.

HOLD CLEANLINESS
Clean and dry without any residue of previous cargoes.

WEATHER PRECAUTIONS
Do not handle cargo during precipitation, keep dry, close hatches that are not being worked.

LOADING
Trim in accordance with the cargo information required by SOLAS VI/2. If doubt exists, trim reasonably level to the boundaries of the cargo space so as to minimize the risk of shifting and to ensure that adequate stability will be maintained during the voyage.

PRECAUTIONS
Avoid contact with combustible materials.

VENTILATION
Do not ventilate.

CARRIAGE
No special requirements.

DISCHARGE
Potassium Nitrate is hygroscopic and will cake if wet. If cargo has hardened trimming may be necessary to avoid formation of overhanging faces.

CLEAN UP
No special requirements.

EMERGENCY PROCEDURES

SPECIAL EMERGENCY EQUIPMENT TO BE CARRIED

Protective clothing (gloves, boots, coveralls, headgear).
Self-contained breathing apparatus.
Spray nozzles.

EMERGENCY PROCEDURES

Wear protective clothing and self-contained breathing apparatus.

EMERGENCY ACTION IN THE EVENT OF FIRE

Use copious quantities of water, which is best, applied in the form of a spray to avoid disturbing the surface of the material.
The material may fuse or melt, in which condition application of water may result in extensive scattering of the molten materials.
Exclusion of air or the use of CO_2 will not control the fire.
Due consideration should be given to the effect on the stability of the ship due to accumulated water.

MEDICAL FIRST AID

Refer to the Medical First Aid Guide (MFAG) as amended.

REMARKS
This material is non-combustible unless contaminated.

POTASSIUM SULPHATE

DESCRIPTION
Hard crystals or powder. Colourless or white.

CHARACTERISTICS

ANGLE OF REPOSE	BULK DENSITY (kg/m^3)	STOWAGE FACTOR (m^3/t)
31	1111	0.90
SIZE	**CLASS**	**GROUP**
Not applicable	Not applicable	C

HAZARD
No special hazards.

This cargo is non-combustible or has a low fire-risk.

STOWAGE & SEGREGATION
No special requirements.

HOLD CLEANLINESS
No special requirements.

WEATHER PRECAUTIONS
No special requirements.

LOADING
Trim in accordance with the cargo information required by SOLAS VI/2. If doubt exists, trim reasonably level to the boundaries of the cargo space so as to minimize the risk of shifting and to ensure that adequate stability will be maintained during the voyage.

PRECAUTIONS
No special requirements.

VENTILATION
Ventilation not required.

CARRIAGE
No special requirements.

DISCHARGE
No special requirements.

CLEAN UP
No special requirements.

PUMICE

DESCRIPTION
Highly porous rock of volcanic origin. Greyish-white.

CHARACTERISTICS

ANGLE OF REPOSE	BULK DENSITY (kg/m^3)	STOWAGE FACTOR (m^3/t)
Not applicable	308 - 526	1.90 - 3.25
SIZE	**CLASS**	**GROUP**
Powder to lumps	Not applicable	C

HAZARD
No special hazards.

This cargo is non-combustible or has a low fire-risk.

STOWAGE & SEGREGATION
No special requirements.

HOLD CLEANLINESS
No special requirements.

WEATHER PRECAUTIONS
No special requirements.

LOADING
Trim in accordance with the cargo information required by SOLAS VI/2. If doubt exists, trim reasonably level to the boundaries of the cargo space so as to minimize the risk of shifting and to ensure that adequate stability will be maintained during the voyage.

PRECAUTIONS
No special requirements.

VENTILATION
Ventilation not required.

CARRIAGE
No special requirements.

DISCHARGE
No special requirements.

CLEAN UP
No special requirements.

PYRITE (Containing copper and iron)
This cargo can be categorized as Group A or C. This cargo entry is for cargo in Group C.

DESCRIPTION
Iron disulphide, containing copper and iron. Moisture 0% to 7%. Extremely dusty.

CHARACTERISTICS

ANGLE OF REPOSE	BULK DENSITY (kg/m^3)	STOWAGE FACTOR (m^3/t)
Not applicable	2000 - 3030	0.33 - 0.50
SIZE	**CLASS**	**GROUP**
Fines to lumps of 300 mm	Not applicable	C

HAZARD
No special hazards.

This cargo is non-combustible or has a low fire-risk.

STOWAGE & SEGREGATION
No special requirements.

HOLD CLEANLINESS
No special requirements.

WEATHER PRECAUTIONS
No special requirements.

LOADING
Trim in accordance with the cargo information required by SOLAS VI/2. If doubt exists, trim reasonably level to the boundaries of the cargo space so as to minimize the risk of shifting and to ensure that adequate stability will be maintained during the voyage.

As the density of the cargo is extremely high, care should be taken to ensure that the cargo is evenly spread across the tanktop to equalize the weight distribution. Do not pile the cargo in the centre of the hatch during loading.

PRECAUTIONS
Protect machinery, accommodation and equipment from dust.

Persons involved in cargo handling should wear protective clothing, goggles and dust filter masks.

VENTILATION
Ventilation not required.

CARRIAGE
No special requirements.

DISCHARGE
No special requirements.

CLEAN UP
No special requirements.

PYRITES, CALCINED (Calcined Pyrites)

DESCRIPTION
Dust to fines, Calcined Pyrites is the residual product from the chemical industry where all types of metal sulphides are either used for the production of sulphuric acid or are processed to recover the elemental metals – copper, lead, zinc, etc. The acidity of the residue can be considerable; in particular, in the presence of water or moist air, where pH values between 1.3 and 2.1 are frequently noted.

CHARACTERISTICS

ANGLE OF REPOSE	BULK DENSITY (kg/m^3)	STOWAGE FACTOR (m^3/t)
Not applicable	2326	0.43
SIZE	**CLASS**	**GROUP**
Not applicable	MHB	A and B

HAZARD
Highly corrosive to steel when wet. Inhalation of dust is irritating and harmful. Cargo may liquefy.

This cargo is non-combustible or has a low fire-risk.

STOWAGE & SEGREGATION
"Separated from" foodstuffs.

HOLD CLEANLINESS
Clean and dry.

WEATHER PRECAUTIONS
Do not load cargo during precipitation; keep dry, close hatches that are not being worked.

LOADING
Trim in accordance with the cargo information required by SOLAS VI/2. If any doubt exists, trim reasonably level to the boundaries of the cargo space so as to minimize the risk of shifting and to ensure that adequate stability will be maintained during the voyage. As the density of the cargo is extremely high, care should be taken to ensure that the cargo is evenly spread across the tank top to equalize the weight distribution. Do not pile the cargo in the centre of the hatch during loading. Moisture content should be below the TML. Reject wet material.

PRECAUTIONS
Bilges should be clean, dry and covered with burlap to prevent ingress of cargo. Remove ceiling boards or seal to prevent cargo penetration. Cover the tank top with lime before loading.

Personnel involved in loading or discharging should wear protective clothing and dust filter masks.

Protect machinery, accommodation and equipment from dust.

VENTILATION
Ventilation not required.

CARRIAGE
Precaution should be taken to prevent water entering the holds.

DISCHARGE
No special requirements.

CLEAN UP
No special requirements.

EMERGENCY PROCEDURES

SPECIAL EMERGENCY EQUIPMENT TO BE CARRIED Nil
EMERGENCY PROCEDURES Nil **EMERGENCY ACTION IN THE EVENT OF FIRE** Nil (non-combustible) **MEDICAL FIRST AID** Refer to the Medical First Aid Guide (MFAG) as amended.

PYROPHYLLITE

DESCRIPTION
A natural hydrous aluminum silicate. Chalk-white. May be dusty.
Lumps: 75%, Rubble: 20%, Fines: 5%.

CHARACTERISTICS

ANGLE OF REPOSE	BULK DENSITY (kg/m^3)	STOWAGE FACTOR (m^3/t)
Not applicable	2000	0.50
SIZE	**CLASS**	**GROUP**
Lump to fine	Not applicable	C

HAZARD
No special hazards.

This cargo is non-combustible or has a low fire-risk.

STOWAGE & SEGREGATION
No special requirements.

HOLD CLEANLINESS
No special requirements.

WEATHER PRECAUTIONS
No special requirements.

LOADING
Trim in accordance with the cargo information required by SOLAS VI/2. If doubt exists, trim reasonably level to the boundaries of the cargo space so as to minimize the risk of shifting and to ensure that adequate stability will be maintained during the voyage.

PRECAUTIONS
Protect machinery, accommodation and equipment from dust ingress.

VENTILATION
Ventilation not required.

CARRIAGE
No special requirements.

DISCHARGE
No special requirements.

CLEAN UP
No special requirements.

QUARTZ

DESCRIPTION
Crystalline lumps.

CHARACTERISTICS

ANGLE OF REPOSE	BULK DENSITY (kg/m^3)	STOWAGE FACTOR (m^3/t)
Not applicable	1667	0.60
SIZE	**CLASS**	**GROUP**
Lumps: 50 mm - 300 mm	Not applicable	C

HAZARD
No special hazards.

This cargo is non-combustible or has a low fire-risk.

STOWAGE & SEGREGATION
No special requirements.

HOLD CLEANLINESS
No special requirements.

WEATHER PRECAUTIONS
No special requirements.

LOADING
Trim in accordance with the cargo information required by SOLAS VI/2. If doubt exists, trim reasonably level to the boundaries of the cargo space so as to minimize the risk of shifting and to ensure that adequate stability will be maintained during the voyage.

PRECAUTIONS
No special requirements.

VENTILATION
Ventilation not required.

CARRIAGE
No special requirements.

DISCHARGE
No special requirements.

CLEAN UP
No special requirements.

QUARTZITE

DESCRIPTION
Quartzite is a compact, granular, metamorphosed sandstone containing quartz. It is white, red, brown or grey in colour and its size varies from large rocks to pebbles. It may also be shipped in semi-crushed and graded sizes.

CHARACTERISTICS

ANGLE OF REPOSE	BULK DENSITY (kg/m^3)	STOWAGE FACTOR (m^3/t)
Not applicable	1563	0.64
SIZE	**CLASS**	**GROUP**
10 mm - 200 mm	Not applicable	C

HAZARD
No special hazards.

This cargo is non-combustible or has a low fire-risk.

STOWAGE & SEGREGATION
No special requirements.

HOLD CLEANLINESS
No special requirements.

WEATHER PRECAUTIONS
No special requirements.

LOADING
Trim in accordance with the cargo information required by SOLAS VI/2. If doubt exists, trim reasonably level to the boundaries of the cargo space so as to minimize the risk of shifting and to ensure that adequate stability will be maintained during the voyage.

PRECAUTIONS
Dust is very abrasive. Protect machinery and equipment from dust. Persons involved in cargo handling should wear protective clothing, goggles and dust filter masks.

VENTILATION
Ventilation not required.

CARRIAGE
No special requirements.

DISCHARGE
Maintain personnel protective precautions.

CLEAN UP
No special requirements.

RADIOACTIVE MATERIAL UN 2912,
LOW SPECIFIC ACTIVITY MATERIAL (LSA-1)

DESCRIPTION
This schedule includes ores containing naturally occurring radionuclides (eg. uranium, thorium) and natural or depleted uranium and thorium concentrates of such ores, including metals, mixtures and compounds.

CHARACTERISTICS

ANGLE OF REPOSE	BULK DENSITY (kg/m^3)	STOWAGE FACTOR (m^3/t)
Not applicable	Not applicable	Not applicable
SIZE	**CLASS**	**GROUP**
Not applicable	7	B

HAZARD
Low radiotoxicity. Some materials may possess chemical hazards.

This cargo is non-combustible or has a low fire-risk.

STOWAGE & SEGREGATION
"Separated from" foodstuffs.

HOLD CLEANLINESS
Clean and dry without any residue of previous cargoes.

WEATHER PRECAUTIONS
Do not handle cargo during precipitation, keep dry, close hatches that are not being worked.

LOADING
Trim in accordance with the cargo information required by SOLAS VI/2. If doubt exists, trim reasonably level to the boundaries of the cargo space so as to minimize the risk of shifting and to ensure that adequate stability will be maintained during the voyage.

PRECAUTIONS
Exposure of persons to dust should be avoided. Do not inhale or ingest dust.

Persons involved in cargo handling should wear protective clothing, including goggles, and facemasks.

There should be no leakage outside the cargo space in which these materials are stowed.

VENTILATION
Do not ventilate.

CARRIAGE
Follow instructions provided by the consignor.

DISCHARGE
Follow instructions provided by the consignor.

CLEAN UP
Cargo spaces used for these materials should not be used for other goods until decontaminated. Refer to paragraph 9.3.2.3 of this Code.

EMERGENCY PROCEDURES

SPECIAL EMERGENCY EQUIPMENT TO BE CARRIED Protective clothing (gloves, boots, coveralls, headgear). Self-contained breathing apparatus.
EMERGENCY PROCEDURES Wear protective clothing and self-contained breathing apparatus. **EMERGENCY ACTION IN THE EVENT OF FIRE** Batten down; use ship's fixed fire-fighting installation, if fitted. Use water spray to control spread of dust, if necessary. **MEDICAL FIRST AID** Refer to the Medical First Aid Guide (MFAG) as amended. Radio for medical advice.

REMARKS
Most materials are likely to be non-combustible. Speedily collect and isolate potentially contaminated equipment and cover. Seek expert advice.

RADIOACTIVE MATERIAL UN 2913,
SURFACE CONTAMINATED OBJECT(S) (SCO-1)

DESCRIPTION
The radioactivity of SCO-1 is low. This schedule includes solid objects of non-radioactive material having a radioactive material distributed on its surfaces which:

1. the non-fixed contamination on the accessible surface, averaged over 300 cm^2 (or the area of the surface if less than 300 cm^2), does not exceed 4 Bq/cm^2 for beta and gamma emitters and low-toxicity alpha emitter, or 0.4 Bq/cm^2 for all other alpha emitters;

2. the fixed contamination on the accessible surface, averaged over 300 cm^2 (or the area of the surface if less than 300 cm^2), does not exceed 4×10^4 Bq/cm^2 for beta and gamma emitters and low-toxicity alpha emitters, or 4×10^3 Bq/cm^2 for all other alpha emitters; and

3. the non-fixed contamination plus the fixed contamination on the inaccessible surface, averaged over 300 cm^2 (or the area of the surface if less than 300cm^2), does not exceed 4×10^4 Bq/cm^2 for beta and gamma emitters and low-toxicity alpha emitters, or 4×10^3 Bq/cm^2 for all other alpha emitters.

CHARACTERISTICS

ANGLE OF REPOSE	BULK DENSITY (kg/m^3)	STOWAGE FACTOR (m^3/t)
Not applicable	Not applicable	Not applicable
SIZE	**CLASS**	**GROUP**
Not applicable	7	B

HAZARD
Low radioactivity.

This cargo is non-combustible or has a low fire-risk.

STOWAGE & SEGREGATION
"Separated from" foodstuffs.

HOLD CLEANLINESS
Clean and dry without any residue of previous cargoes.

WEATHER PRECAUTIONS
Do not handle cargo during precipitation, keep dry, close hatches that are not being worked.

LOADING
Trim in accordance with the cargo information required by SOLAS VI/2. If doubt exists, trim reasonably level to the boundaries of the cargo space so as to minimize the risk of shifting and to ensure that adequate stability will be maintained during the voyage.

PRECAUTIONS
Exposure of persons to dust should be avoided. Do not inhale or ingest dust.

Persons involved in cargo handling should wear protective clothing, including goggles, and facemasks.

There should be no leakage outside the cargo space in which these materials are stowed.

VENTILATION
Do not ventilate.

CARRIAGE
Follow instructions provided by the consignor.

DISCHARGE
Follow instructions provided by the consignor.

CLEAN UP
Refer to paragraph 9.3.2.3 of this Code. Cargo spaces used for these materials should not be used for other goods until decontaminated.

EMERGENCY PROCEDURES

SPECIAL EMERGENCY EQUIPMENT TO BE CARRIED Protective clothing (gloves, boots, coveralls, headgear). Self-contained breathing apparatus.
EMERGENCY PROCEDURES Wear protective clothing and self-contained breathing apparatus. **EMERGENCY ACTION IN THE EVENT OF FIRE** Batten down; use ship's fixed fire-fighting installation, if fitted. Use water spray to control spread of dust, if necessary. **MEDICAL FIRST AID** Refer to the Medical First Aid Guide (MFAG) as amended. Radio for medical advice.

REMARKS
Most materials are likely to be non-combustible. Speedily collect and isolate potentially contaminated equipment and cover. Seek expert advice.

RASORITE (ANHYDROUS)

DESCRIPTION
A granular, yellow-white crystalline material with little or no dust. Abrasive. Hygroscopic.

CHARACTERISTICS

ANGLE OF REPOSE	BULK DENSITY (kg/m^3)	STOWAGE FACTOR (m^3/t)
Not applicable	1282 - 1493	0.67 - 0.78
SIZE	**CLASS**	**GROUP**
Less than 2.36 mm	Not applicable	C

HAZARD
No special hazards.

This cargo is non-combustible or has a low fire-risk.

STOWAGE & SEGREGATION
No special requirements.

HOLD CLEANLINESS
No special requirements.

WEATHER PRECAUTIONS
No special requirements.

LOADING
Trim in accordance with the cargo information required by SOLAS VI/2. If doubt exists, trim reasonably level to the boundaries of the cargo space so as to minimize the risk of shifting and to ensure that adequate stability will be maintained during the voyage.

PRECAUTIONS
No special requirements.

VENTILATION
Ventilation not required.

CARRIAGE
No special requirements.

DISCHARGE
Rasorite is hygroscopic and will cake if wet. If cargo has hardened, trimming may be necessary to avoid formation of overhanging faces.

CLEAN UP
No special requirements.

RUTILE SAND

DESCRIPTION
Fine particled brown to black sand. Abrasive. Shipped dry. May be dusty.

CHARACTERISTICS

ANGLE OF REPOSE	BULK DENSITY (kg/m^3)	STOWAGE FACTOR (m^3/t)
Not applicable	2500 - 2700	0.37 - 0.40
SIZE	**CLASS**	**GROUP**
0.15 mm or less	Not applicable	C

HAZARD
No special hazards.

This cargo is non-combustible or has a low fire-risk.

STOWAGE & SEGREGATION
No special requirements.

HOLD CLEANLINESS
No special requirements.

WEATHER PRECAUTIONS
Do not load cargo during precipitation; keep dry, close hatches that are not being worked.

LOADING
Trim in accordance with the cargo information required by SOLAS VI/2. If doubt exists, trim reasonably level to the boundaries of the cargo space so as to minimize the risk of shifting and to ensure that adequate stability will be maintained during the voyage.

As the density of the cargo is extremely high, care should be taken to ensure that the cargo is evenly spread across the tanktop to equalize the weight distribution. Do not pile the cargo in the centre of the hatch during loading.

PRECAUTIONS
Bilge plates should be perforated and covered with two layers of burlap to protect bilge wells against sand ingress.

Protect machinery, accommodation and equipment from dust.

Persons involved in cargo handling should wear protective clothing, goggles and dust filter masks.

VENTILATION
Ventilation not required.

CARRIAGE
No special requirements.

DISCHARGE
No special requirements.

CLEAN UP
Bilge plates should be perforated and covered with two layers of burlap to protect bilge wells against sand ingress.

SALT

DESCRIPTION
Fine white grains. Moisture variable to 5.5%.

CHARACTERISTICS

ANGLE OF REPOSE	BULK DENSITY (kg/m^3)	STOWAGE FACTOR (m^3/t)
Not applicable	893 - 1235	0.81 - 1.12
SIZE	**CLASS**	**GROUP**
Grains to 12 mm	Not applicable	C

HAZARD
No special hazards.

This cargo is non-combustible or has a low fire-risk.

STOWAGE & SEGREGATION
No special requirements.

HOLD CLEANLINESS
Clean and dry.

WEATHER PRECAUTIONS
Cargo should be protected from precipitation during handling operations and be kept as dry as reasonably practicable.

LOADING
Trim in accordance with the cargo information required by SOLAS VI/2. If doubt exists, trim reasonably level to the boundaries of the cargo space so as to minimize the risk of shifting and to ensure that adequate stability will be maintained during the voyage.

PRECAUTIONS
Salt is water-soluble. In the case of ingress of water into the holds, the risk to the loss of the stability of the ship through dissolution of salt (formation of a liquid base and shifting of cargo), should be recognized.

The parts of the hatch in contact with the cargo should be lime washed or coated with paint to prevent corrosion. Eg. tanktops, hoppers, side plating and bulkheads.

VENTILATION
Do not ventilate.

CARRIAGE
Seal hatches and avoid excessive condensation.

DISCHARGE
No special requirements.

CLEAN UP
No special requirements.

SALT CAKE

DESCRIPTION
Impure sodium sulphate. White in colour. Granular, shipped dry.

CHARACTERISTICS

ANGLE OF REPOSE	BULK DENSITY (kg/m^3)	STOWAGE FACTOR (m^3/t)
Not applicable	1052 - 1124	0.89 - 0.95
SIZE	**CLASS**	**GROUP**
10 mm to 200 mm	Not applicable	C

HAZARD
No special hazards.

This cargo is non-combustible or has a low fire-risk.

STOWAGE & SEGREGATION
No special requirements.

HOLD CLEANLINESS
No special requirements.

WEATHER PRECAUTIONS
No special requirements.

LOADING
Trim in accordance with the cargo information required by SOLAS VI/2. If doubt exists, trim reasonably level to the boundaries of the cargo space so as to minimize the risk of shifting and to ensure that adequate stability will be maintained during the voyage.

PRECAUTIONS
No special requirements.

VENTILATION
Ventilation not required.

CARRIAGE
No special requirements.

DISCHARGE
No special requirements.

CLEAN UP
No special requirements.

SALT ROCK

DESCRIPTION
White. Moisture content 0.02%.

CHARACTERISTICS

ANGLE OF REPOSE	BULK DENSITY (kg/m^3)	STOWAGE FACTOR (m^3/t)
Not applicable	943 - 1020	0.98 - 1.06
SIZE	**CLASS**	**GROUP**
Small granules	Not applicable	C

HAZARD
No special hazards.

This cargo is non-combustible or has a low fire-risk.

STOWAGE & SEGREGATION
No special requirements.

HOLD CLEANLINESS
No special requirements.

WEATHER PRECAUTIONS
No special requirements.

LOADING
Trim in accordance with the cargo information required by SOLAS VI/2. If doubt exists, trim reasonably level to the boundaries of the cargo space so as to minimize the risk of shifting and to ensure that adequate stability will be maintained during the voyage.

PRECAUTIONS
No special requirements.

VENTILATION
Ventilation not required.

CARRIAGE
No special requirements.

DISCHARGE
No special requirements.

CLEAN UP
No special requirements.

SAND

DESCRIPTION
Usually fine particles. Abrasive and dusty.

Sands included in this schedule are:

FOUNDRY SAND
POTASSIUM FELSPAR SAND
QUARTZ SAND
SILICA SAND
SODA FELSPAR SAND

CHARACTERISTICS

ANGLE OF REPOSE	BULK DENSITY (kg/m^3)	STOWAGE FACTOR (m^3/t)
Not applicable	1020 - 2000	0.50 - 0.98
SIZE	**CLASS**	**GROUP**
0.1 mm - 5 mm	Not applicable	C

HAZARD
Inhalation of silica dust can result in respiratory disease. Silica particulates are easily transported by air and inhaled.

This cargo is non-combustible or has a low fire-risk.

STOWAGE & SEGREGATION
Industrial sand may be coated with resin and will cake if exposed to heat (55°C – 60°C). Keep away from heat sources.

HOLD CLEANLINESS
Clean and dry.

WEATHER PRECAUTIONS
Do not load cargo during precipitation, keep dry, close hatches that are not being worked.

LOADING
Trim in accordance with the cargo information required by SOLAS VI/2. If doubt exists, trim reasonably level to the boundaries of the cargo space so as to minimize the risk of shifting and to ensure that adequate stability will be maintained during the voyage.

PRECAUTIONS
Protect machinery, accommodation and equipment from dust.

Persons involved in cargo handling should wear protective clothing, goggles and dust filter masks.

VENTILATION
Ventilation not required.

CARRIAGE
Keep bilge wells dry.

DISCHARGE
Maintain personnel protection precautions.

CLEAN UP
Pay particular attention to bilge wells.

SAWDUST

DESCRIPTION
Fine particles of wood.

CHARACTERISTICS

ANGLE OF REPOSE	BULK DENSITY (kg/m^3)	STOWAGE FACTOR (m^3/t)
Not applicable	Not applicable	Not applicable
SIZE	**CLASS**	**GROUP**
Not applicable	MHB	B

HAZARD
Spontaneous combustion if not clean, dry and free from oil. Liable to cause oxygen depletion within the cargo space.

STOWAGE & SEGREGATION
Segregation as required for class 4.1 materials.

"Separated from" all class 5.1 liquids and all class 8 liquids.

HOLD CLEANLINESS
Clean and dry without any residue of previous cargoes.

WEATHER PRECAUTIONS
Do not handle cargo during precipitation, keep dry, close hatches that are not being worked.

LOADING
Trim in accordance with the cargo information required by SOLAS VI/2. If doubt exists, trim reasonably level to the boundaries of the cargo space so as to minimize the risk of shifting and to ensure that adequate stability will be maintained during the voyage.

PRECAUTIONS
Check bilge wells are clear and covered to prevent ingress of cargo.
Ship only when clean, dry and free from oil.

VENTILATION
Surface ventilation required.

CARRIAGE
No special requirements.

DISCHARGE
No special requirements.

CLEAN UP
No special requirements.

EMERGENCY PROCEDURES

SPECIAL EMERGENCY EQUIPMENT TO BE CARRIED Nil
EMERGENCY PROCEDURES Nil **EMERGENCY ACTION IN THE EVENT OF FIRE** Batten down; use ship's fixed fire-fighting installation if fitted. Exclusion of air may be sufficient to control fire. **MEDICAL FIRST AID** Refer to the Medical First Aid Guide (MFAG) as amended.

SCRAP METAL

DESCRIPTION
"Scrap" iron or steel covers an enormous range of ferrous metals, principally intended for recycling.

CHARACTERISTICS

ANGLE OF REPOSE	BULK DENSITY (kg/m^3)	STOWAGE FACTOR (m^3/t)
Not applicable	Varies	Varies
SIZE	**CLASS**	**GROUP**
Varies	Not applicable	C

HAZARD
No special hazards. This cargo is non-combustible or has a low fire-risk except when cargo contains swarf (fine metal turnings liable to spontaneous combustion) refer to the entry for ferrous metal borings, shavings turnings or cutting in this Code.

STOWAGE & SEGREGATION
No special requirements.

HOLD CLEANLINESS
No special requirements.

WEATHER PRECAUTIONS
Do not load cargo during precipitation; keep dry, close hatches that are not being worked.

LOADING
See appendix to this schedule.

PRECAUTIONS
See appendix to this schedule.

VENTILATION
Surface ventilation required.

CARRIAGE
Do not pump bilge wells unless absolutely necessary, as a certain amount of dirt and oil can be expected from old machinery, (see appendix).

DISCHARGE
By magnet or spider grab. Protect the decks etc from fall out. Check carefully for damage.

CLEAN UP
Make sure the crew are aware of broken glass and sharp edges when cleaning up. Make sure that oil spillages, if any, are cleaned from tank tops and bilge wells before wash down.

APPENDIX

SCRAP METAL

Handling of scrap varies from magnets to spider grabs, depending usually on the size of material. Unless the content of a scrap cargo is particularly mentioned, the ship's officers should expect anything. This may include articles from the size of car bodies to fine metal turnings (swarf). The weight of individual pieces will also vary greatly, ranging from heavy machinery to tin cans.

Loading

Before loading, the holds should be prepared as per general loading practice and any areas liable to be damaged by the falling scrap should be protected with dunnage. This includes decks and coamings in way of the material's path to the holds. Removing the ship's side rails may be advisable.

A layer of scrap should be carefully placed over the tank top in the square to cushion any fall out. Magnet and grab drivers should be instructed not to release their loads too high above the pile.

The usual method of loading is to form a pile along the ship's centre line and use the slope to roll material into the ends and sides. Every effort must be made to work the wings and ends to evenly distribute the weight. If this is not done, the light high volume pieces will roll to the wings and the small heavy pieces will concentrate in the square.

A certain amount of dirt and oil can be expected from old machinery so it is advisable to check overboard discharges if pumping bilge wells is contemplated. Broken glass and sharp jagged edges may be present and care should be taken by personnel working near scrap.

Before hatches are closed, check to see that no sharp projections could possibly pierce the ship’s side.

SEED CAKE, containing vegetable oil UN 1386
(a) mechanically expelled seeds, containing more than 10% of oil or more than 20% of oil and moisture combined.
To be carried in bulk only with special permission from the competent authority.

DESCRIPTION
Residue remaining after oil has been expelled mechanically from oil-bearing seeds. The cereals and cereal products included in this schedule are those derived from:

BAKERY MATERIALS
BARLEY MALT PELLETS
BEET
BRAN PELLETS
BREWERS GRAIN PELLETS
CITRUS PULP PELLETS
COCONUT
COPRA
CORN GLUTEN
COTTON SEED
EXPELLERS
GLUTEN PELLETS
GROUND NUTS, MEAL
HOMINY CHOP
LINSEED
MAIZE
MEAL, OILY
MILL FEED PELLETS
NIGER SEED, EXPELLERS
OIL CAKE
PALM KERNEL
PEANUTS
PELLETS, CEREAL
POLLARD PELLETS
RAPE SEED
RICE BROKEN
RICE BRAN
SAFFLOWER SEED
SEED EXPELLERS, OILY
SOYABEAN
STRUSSA PELLETS
SUNFLOWER SEED
TOASTED MEALS

The above may be shipped in the form of pulp, meals, cake, pellets, expellers.

CHARACTERISTICS

ANGLE OF REPOSE	BULK DENSITY (kg/m^3)	STOWAGE FACTOR (m3/t)
Not applicable	478 - 719	1.39 - 2.09
SIZE	**CLASS**	**GROUP**
Not applicable	4.2	B

HAZARD
May self-heat slowly and, if wet or containing an excessive proportion of unoxidized oil, ignite spontaneously. Liable to oxidize, causing subsequent reduction of oxygen in the cargo space. Carbon dioxide may be produced.

STOWAGE & SEGREGATION
See section 9.3 of this Code.

HOLD CLEANLINESS
Clean and dry without any residue of previous cargoes.

WEATHER PRECAUTIONS
Do not handle cargo during precipitation, keep dry, close hatches that are not being worked.

LOADING
Trim the cargo in accordance with the cargo information required by SOLAS VI/2. If doubt exists, trim reasonably level to the boundaries of the cargo space so as to minimize the risk of shifting and to ensure that adequate stability will be maintained during the voyage.

PRECAUTIONS
The cargo should be near ambient temperature when loading.

Before shipment, this material should be properly aged; the duration of ageing required varies with the oil content. If satisfied, as a result of tests, that such relaxation is justified, the competent authority may permit seed cakes described in this schedule to be carried under conditions governing Seed Cake (b) (see following entry). Certificates from the competent authority giving such permission should state the oil content and moisture content. For seed cakes with other oil and moisture content, see following entries.

Regular temperature readings should be taken at varying depths in the cargo spaces and recorded. If the temperature of the material reaches 55°C and continues to increase, ventilation to the cargo should be restricted. If self-heating continues, then carbon dioxide or inert gas should be introduced.

Entry of personnel into cargo spaces should not be permitted until tests have been carried out and it has been established that the oxygen content has been restored to a normal level.

VENTILATION
To prevent self-heating of the cargo, mechanical ventilation is not recommended.

CARRIAGE
Ensure that hatches are weathertight.

DISCHARGE
See precautions.

CLEAN UP
No special requirements.

EMERGENCY PROCEDURES

SPECIAL EMERGENCY EQUIPMENT TO BE CARRIED Self-contained breathing apparatus.
EMERGENCY PROCEDURES Wear self-contained breathing apparatus. **EMERGENCY ACTION IN THE EVENT OF FIRE** Batten down; use ship's fixed fire-fighting installation, if fitted. **MEDICAL FIRST AID** Refer to the Medical First Aid Guide (MFAG) as amended.

SEED CAKE, containing vegetable oil UN 1386
(b) solvent extraction and expelled seeds, containing not more than 10% of oil and, when the amount of moisture is higher than 10%, not more than 20% of oil and moisture combined.

When in solvent extracted seed cake, the oil or oil and moisture content exceeds the percentages stated above, guidance should be sought from the competent authorities.

DESCRIPTION
Residue remaining after oil has been extracted by a solvent process or expelled mechanically from oil-bearing seeds. The cereals and cereal products included in this schedule are those derived from:

BAKERY MATERIALS
BARLEY MALT PELLETS
BEET
BRAN PELLETS
BREWERS GRAIN PELLETS
CITRUS PULP PELLETS
COCONUT
COPRA
CORN GLUTEN
COTTON SEED
EXPELLERS
GLUTEN PELLETS
GROUND NUTS, MEAL
HOMINY CHOP
LINSEED
MAIZE
MEAL, OILY
MILL FEED PELLETS
NIGER SEED, EXPELLERS
OIL CAKE
PALM KERNEL
PEANUTS
PELLETS, CEREAL
POLLARD PELLETS
RAPE SEED
RICE BROKEN
RICE BRAN
SAFFLOWER SEED
SEED EXPELLERS, OILY
SOYABEAN
STRUSSA PELLETS
SUNFLOWER SEED
TOASTED MEALS

The above may be shipped in the form of pulp, meals, cake, pellets, expellers.

The provisions of this schedule should not apply to solvent extracted rape seed meal, pellets, soya bean meal, cotton seed meal and sunflower seed meal containing not more than 4% oil and 15% oil and moisture combined. A certificate from a person recognized by the competent authority of the country of shipment should be provided by the shipper, prior to loading, stating that the provisions for the exemption are met.

CHARACTERISTICS

ANGLE OF REPOSE	BULK DENSITY (kg/m^3)	STOWAGE FACTOR (m^3/t)
Not applicable	478 - 719	1.39 - 2.09
SIZE	**CLASS**	**GROUP**
Not applicable	4.2	B

HAZARD
May self-heat slowly and, if wet or containing an excessive proportion of unoxidized oil, ignite spontaneously. Liable to oxidize, causing subsequent reduction of oxygen in the cargo space. Carbon dioxide may also be produced.

STOWAGE & SEGREGATION
To be stowed in a mechanically ventilated cargo space if solvent-extracted. See also section 9.3 of this Code.

HOLD CLEANLINESS
Clean and dry without any residue of previous cargoes.

WEATHER PRECAUTIONS
Do not handle cargo during precipitation, keep dry, close hatches that are not being worked.

LOADING
A certificate from a recognized authority should state the oil content and moisture content.

If solvent-extracted, the seed cake should be substantially free from flammable solvent.

Trim in accordance with the cargo information required by SOLAS VI/2. If doubt exists, trim reasonably level to the boundaries of the cargo space so as to minimize the risk of shifting and to ensure that adequate stability will be maintained during the voyage.

PRECAUTIONS
Before shipment, this material should be properly aged; the duration of ageing required varies with the oil content.

If the voyage exceeds five days the ship should be equipped with facilities for introducing carbon dioxide or another inert gas into the cargo spaces.

Regular temperature readings should be taken at varying depths in the cargo spaces and recorded. If the temperature of the material reaches 55°C and continues to increase, ventilation to the cargo space should be restricted. If self-heating continues, then carbon dioxide or inert gas should be introduced. In the case of solvent-extracted seed cakes the use of carbon dioxide or inert gas should be withheld until fire is apparent, to avoid the possibility of ignition of solvent vapours by the generation of static electricity.

Smoking and the use of naked lights should be prohibited during loading and unloading and on entry into the cargo spaces at any other time.

Electrical circuits in cargo spaces, which are unsuitable for use in an explosive atmosphere, are to be isolated by removal of links in the system other than fuses. Spark-arresting screens should be fitted to ventilators.

Entry of personnel into cargo spaces should not be permitted until tests have been carried out and it has been established that the oxygen content has been restored to a normal level.

VENTILATION
Surface ventilation either natural or mechanical should be conducted, as necessary, for removing any residual solvent vapour. To prevent self-heating of the cargo caution is required when using mechanical ventilation.

CARRIAGE
Ensure that hatches are weathertight.

DISCHARGE
See precautions.

CLEAN UP
No special requirements.

EMERGENCY PROCEDURES

SPECIAL EMERGENCY EQUIPMENT TO BE CARRIED Self-contained breathing apparatus.
EMERGENCY PROCEDURES Wear self-contained breathing apparatus. **EMERGENCY ACTION IN THE EVENT OF FIRE** Batten down. Use ship's fixed fire-fighting installation, if fitted. **MEDICAL FIRST AID** Refer to the Medical First Aid Guide (MFAG) as amended.

REMARKS

In the case of solvent-extracted seed cake, the use of CO_2 should be withheld until fire is apparent.

The use of CO_2 is limited to controlling the fire and further amounts may need to be injected from time to time during the sea passage to reduce the oxygen content in the hold. On arrival in port, the cargo will need to be dug out to reach the seat of the fire.

SEED CAKE, containing vegetable oil UN 2217
(c) solvent extraction containing not more than 1.5% of oil and not more than 11% of moisture.

DESCRIPTION
Residue remaining after oil has been extracted by a solvent process from oil-bearing seeds. The cereals and cereal products included in this schedule are those derived from:

BAKERY MATERIALS
BARLEY MALT PELLETS
BEET
BRAN PELLETS
BREWERS GRAIN PELLETS
CITRUS PULP PELLETS
COCONUT
COPRA
CORN GLUTEN
COTTON SEED
EXPELLERS
GLUTEN PELLETS
GROUND NUTS, MEAL
HOMINY CHOP
LINSEED
MAIZE
MEAL, OILY
MILL FEED PELLETS
NIGER SEED, EXPELLERS
OIL CAKE
PALM KERNEL
PEANUTS
PELLETS, CEREAL
POLLARD PELLETS
RAPE SEED
RICE BROKEN
RICE BRAN
SAFFLOWER SEED
SEED EXPELLERS, OILY
SOYABEAN
STRUSSA PELLETS
SUNFLOWER SEED

The above may be shipped in the form of pulp, meals, cake, pellets, expellers.

The provisions of this entry should not apply to solvent-extracted rape seed meal pellets, soya bean meal, cotton seed meal and sunflower seed meal containing not more than 1.5% oil and not more than 11% moisture and being substantially free from flammable solvent. A certificate from a person recognized by the competent authority of the country of shipment should be provided by the shipper, prior to loading, stating that the provisions for the exemption are met.

CHARACTERISTICS

ANGLE OF REPOSE	BULK DENSITY (kg/m^3)	STOWAGE FACTOR (m3/t)
Not applicable	478 - 719	1.39 - 2.09
SIZE	**CLASS**	**GROUP**
0.1 mm - 5 mm	4.2	B

HAZARD
May self-heat slowly and, if wet or containing an excessive proportion of unoxidized oil, ignite spontaneously. Liable to oxidize, causing subsequent reduction of oxygen in the cargo space. Carbon dioxide may also be produced.

STOWAGE & SEGREGATION
To be stowed in a mechanically ventilated cargo space. See also section 9.3 of this Code.

HOLD CLEANLINESS
Clean and dry without any residue of previous cargoes.

WEATHER PRECAUTIONS
Do not handle cargo during precipitation, keep dry, close hatches that are not being worked.

LOADING
A certificate from a recognized authority should state the oil content and moisture content.

The seed cake should be substantially free from flammable solvent.

Trim in accordance with the cargo information required by SOLAS VI/2. If doubt exists, trim reasonably level to the boundaries of the cargo space so as to minimize the risk of shifting and to ensure that adequate stability will be maintained during the voyage.

PRECAUTIONS
If the voyage exceeds five days the ship should be equipped with facilities for introducing carbon dioxide or another inert gas into the cargo spaces.

Regular temperature readings should be taken at varying depths in the cargo spaces and recorded. If the temperature of the material reaches 55°C and continues to increase, ventilation to the cargo space should be restricted. If self-heating continues, the use of carbon dioxide or inert gas should be withheld until fire is apparent, to avoid the possibility of ignition of solvent vapours by the generation of static electricity.

Smoking and the use of naked lights should be prohibited during loading and unloading and on entry into the cargo spaces at any other time.

Electrical circuits in cargo spaces which are unsuitable for use in an explosive atmosphere are to be isolated by removal of links in the system other than fuses. Spark-arresting screens should be fitted to ventilators.

Entry of personnel into cargo spaces should not be permitted until tests have been carried out and it has been established that the oxygen content has been restored to a normal level.

VENTILATION
Surface ventilation either natural or mechanical should be conducted, as necessary, for removing any residual solvent vapour. To prevent self-heating of the cargo caution is required when using mechanical ventilation.

CARRIAGE
Ensure that hatches are weathertight.

DISCHARGE
See precautions.

CLEAN UP
No special requirements.

EMERGENCY PROCEDURES

SPECIAL EMERGENCY EQUIPMENT TO BE CARRIED Self-contained breathing apparatus.
EMERGENCY PROCEDURES Wear self-contained breathing apparatus. **EMERGENCY ACTION IN THE EVENT OF FIRE** Batten down. Used ship's fixed fire-fighting installation, if fitted. **MEDICAL FIRST AID** Refer to the Medical First Aid Guide (MFAG) as amended.

REMARKS
For solvent-extracted seed cake, the use of CO_2 should be withheld until fire is apparent.

The use of CO_2 is limited to controlling the fire, and further amounts may need to be injected from time to time during passage to reduce the oxygen content in the hold. On arrival in port, the cargo will need to be dug out to reach the seat of the fire.

SEED CAKE (d)
(Non-hazardous)

DESCRIPTION
The most common cereals and cereal products related to this schedule include those derived from:

BAKERY MATERIALS
BARLEY MALT PELLETS
BEET
BRAN PELLETS
BREWERS GRAIN PELLETS
CITRUS PULP PELLETS
COCONUT
COPRA
CORN GLUTEN
COTTON SEED
EXPELLERS
GLUTEN PELLETS
GROUND NUTS, MEAL
HOMINY CHOP
LINSEED
MAIZE
MEAL, OILY
MILL FEED PELLETS
NIGER SEED, EXPELLERS
OIL CAKE
PALM KERNEL
PEANUTS
PELLETS, CEREAL
POLLARD PELLETS
RAPE SEED
RICE BROKEN
RICE BRAN
SAFFLOWER SEED
SEED EXPELLERS, OILY
SOYABEAN
STRUSSA PELLETS
SUNFLOWER SEED
TOASTED MEALS

The above may be shipped in the form of pulp, meals, cake, pellets, and expellers.

Requires a certificate from a competent authority or shipper stating that the requirements for exemption are met as set out in the schedules for SEED CAKE (b) and (c).

CHARACTERISTICS

ANGLE OF REPOSE	BULK DENSITY (kg/m^3)	STOWAGE FACTOR (m^3/t)
Not applicable	478 - 719	1.39 - 2.09
SIZE	**CLASS**	**GROUP**
Not applicable	Not applicable	C

HAZARD
No special hazards.

This cargo is non-combustible or has a low fire-risk.

STOWAGE & SEGREGATION
No special requirements.

HOLD CLEANLINESS
Clean and dry without any residue of previous cargoes.

WEATHER PRECAUTIONS
Do not handle cargo during precipitation, keep dry, close hatches that are not being worked.

LOADING
Trim in accordance with the cargo information required by SOLAS VI/2. If doubt exists, trim reasonably level to the boundaries of the cargo space so as to minimize the risk of shifting and to ensure that adequate stability will be maintained during the voyage.

PRECAUTIONS
No special requirements.

VENTILATION
Ventilation not required.

CARRIAGE
Ensure that hatches are weathertight.

DISCHARGE
No special requirements.

CLEAN UP
No special requirements.

SILICOMANGANESE (low carbon)
(With known hazard profile or known to evolve gases)
(With silicon content of 25% or more)

DESCRIPTION
Silicomanganese is an extremely heavy cargo, silvery metallic material with a grey oxide coating.

CHARACTERISTICS

ANGLE OF REPOSE	BULK DENSITY (kg/m^3)	STOWAGE FACTOR (m^3/t)
Not applicable	approx. 3000	0.18 - 0.26
SIZE	**CLASS**	**GROUP**
approx. 10 - 100 mm	MHB	B

HAZARD
In contact with water may evolve hydrogen, a flammable gas that may form explosive mixtures with air and may, under similar conditions produce phosphine and arsine, which are highly toxic gases.

Cargo is liable to reduce oxygen content in a cargo space.

This cargo is non-combustible or has a low fire-risk.

STOWAGE & SEGREGATION
Segregation as required for class 4.3 materials.

"Separated from" foodstuffs and all class 8 liquids.

HOLD CLEANLINESS
Clean and dry without any residue of previous cargoes.

WEATHER PRECAUTIONS
Do not load cargo during precipitation, keep dry, close hatches that are not being worked.

LOADING
Trim in accordance with the cargo information required by SOLAS VI/2. If doubt exists, trim reasonably level to the boundaries of the cargo space so as to minimize the risk of shifting and to ensure that adequate stability will be maintained during the voyage.

As the density of the cargo is extremely high, care should be taken to ensure that the cargo is evenly spread across the tanktop to equalize the weight distribution. Do not pile the cargo in the centre of the hatch during loading.

PRECAUTIONS
Prior to loading, a certificate should be provided by the manufacturer or the shipper stating that, after manufacture, the material was stored under cover, but exposed to the open air for not less than three days prior to shipment.

Entry of personnel into enclosed spaces should not be permitted until tests have been carried out and it has been established that the oxygen content has been restored to a normal level throughout the space and that no toxic gas is present, unless adequate ventilation and air circulation throughout the free space above the material has been effected. See Appendix 7 in this Code for general precautions and procedures for entering enclosed spaces.

Prohibition of smoking in dangerous areas should be enforced, and clearly legible "NO SMOKING" signs should be displayed.

Electrical fittings and cables should be in good condition and properly safeguarded against short circuits and sparking. Where a bulkhead is required to be suitable for segregation purposes, cable and conduit penetrations of the decks and bulkheads should be sealed against the passage of gas and vapour.

Whenever possible, ventilation systems should be shut down or screened and air condition systems, if any, placed on recirculation during loading or discharge, in order to minimise the entry of dust into living quarters or other interior spaces of the ship.

Precautions should be taken to minimise the extent to which dust may come in contact with moving parts of deck machinery and external navigation aids (e.g. navigation lights).

VENTILATION
Mechanical surface ventilation required.

CARRIAGE
Appropriate instrument for measuring the concentration of gas and oxygen in the cargo space should be provided.

DISCHARGE
See precautions.

CLEAN UP
No special requirements.

EMERGENCY PROCEDURES

SPECIAL EMERGENCY EQUIPMENT TO BE CARRIED Self-contained breathing apparatus.
EMERGENCY PROCEDURES Wear self-contained breathing apparatus. **EMERGENCY ACTION IN THE EVENT OF FIRE** Batten down and use CO_2 if available. Do not use water. **MEDICAL FIRST AID** Refer to Medical First Aid Guide (MFAG) as amended.

REMARKS
Material is virtually non-combustible when dry.

SODA ASH
(Dense and light)

DESCRIPTION
Powdery; composed of white, odourless grains and dust. It is made by the combustion of salt and limestone. Soluble in water. Soda ash is ruined on contact with oil.

CHARACTERISTICS

ANGLE OF REPOSE	BULK DENSITY (kg/m^3)	STOWAGE FACTOR (m^3/t)
Not applicable	599 - 1053	0.95- 1.67
SIZE	**CLASS**	**GROUP**
Powdery	Not applicable	C

HAZARD
No special hazards.

This cargo is non-combustible or has a low fire-risk.

STOWAGE & SEGREGATION
No special requirements.

HOLD CLEANLINESS
No special requirements.

WEATHER PRECAUTIONS
Do not handle cargo during precipitation; keep dry, close hatches that are not being worked.

LOADING
Trim in accordance with the cargo information required by SOLAS VI/2. If doubt exists, trim reasonably level to the boundaries of the cargo space so as to minimize the risk of shifting and to ensure that adequate stability will be maintained during the voyage.

PRECAUTIONS
Protect machinery, accommodation and equipment from dust.

VENTILATION
Ventilation not required.

CARRIAGE
No special requirements.

DISCHARGE
No special requirements.

CLEAN UP
Sweep clean. Residue can be pumped as slurry during wash out.

SODIUM NITRATE UN 1498

DESCRIPTION
Colourless, transparent, odourless crystals. Hygroscopic and soluble in water.

CHARACTERISTICS

ANGLE OF REPOSE	BULK DENSITY (kg/m^3)	STOWAGE FACTOR (m^3/t)
Not applicable	508 - 719	1.39 - 1.97
SIZE	**CLASS**	**GROUP**
Not applicable	5.1	B

HAZARD
Although non-combustible, mixtures with combustible material are readily ignited and may burn fiercely.

STOWAGE & SEGREGATION
"Separated from" foodstuffs.

HOLD CLEANLINESS
Clean and dry without any residue of previous cargoes.

WEATHER PRECAUTIONS
Do not handle cargo during precipitation, keep dry, close hatches that are not being worked.

LOADING
Trim in accordance with the cargo information required by SOLAS VI/2. If doubt exists, trim reasonably level to the boundaries of the cargo space so as to minimize the risk of shifting and to ensure that adequate stability will be maintained during the voyage.

PRECAUTIONS
Make sure bilge wells are dry and covered to prevent cargo ingress.

VENTILATION
Do not ventilate.

CARRIAGE
No special requirements.

DISCHARGE
Sodium Nitrate is hygroscopic and will cake if wet. If cargo has hardened trimming may be necessary to avoid formation of overhanging faces.

CLEAN UP
No special requirements.

EMERGENCY PROCEDURES

SPECIAL EMERGENCY EQUIPMENT TO BE CARRIED

Protective clothing (gloves, boots, coveralls, headgear).
Self-contained breathing apparatus.
Spray nozzles.

EMERGENCY PROCEDURES

Wear protective clothing and self-contained breathing apparatus.

EMERGENCY ACTION IN THE EVENT OF FIRE

Use copious quantities of water, which is best applied in the form of a spray to avoid disturbing the surface of the material. The material may fuse or melt, in which condition application may result in extensive scattering of the molten material. Exclusion of air or the use of CO_2 will not control the fire. Due consideration should be given to the effect on the stability of the ship due to accumulated water.

MEDICAL FIRST AID

Refer to the Medical First Aid Guide (MFAG) as amended.

REMARKS
This material is non-combustible unless contaminated.

SODIUM NITRATE AND POTASSIUM NITRATE MIXTURE UN 1499

DESCRIPTION
A hygroscopic mixture, soluble in water.

CHARACTERISTICS

ANGLE OF REPOSE	BULK DENSITY (kg/m^3)	STOWAGE FACTOR (m^3/t)
30°	1136	0.88
SIZE	**CLASS**	**GROUP**
Not applicable	5.1	B

HAZARD
Although non-combustible, mixtures with combustible material may readily ignite and burn fiercely.

STOWAGE & SEGREGATION
"Separated from" foodstuffs.

HOLD CLEANLINESS
Clean and dry without any residue of previous cargoes.

WEATHER PRECAUTIONS
Do not handle cargo during precipitation, keep dry, close hatches that are not being worked.

LOADING
Trim in accordance with the cargo information required by SOLAS VI/2. If doubt exists, trim reasonably level to the boundaries of the cargo space so as to minimize the risk of shifting and to ensure that adequate stability will be maintained during the voyage.

PRECAUTIONS
Avoid contact with combustible materials.
Bilge wells should be clean, dry and covered to prevent cargo ingress.

VENTILATION
Do not ventilate.

CARRIAGE
No special requirements.

DISCHARGE
Sodium Nitrate and Potassium Nitrate Mixture is hygroscopic and will cake if wet. If cargo has hardened trimming may be necessary to avoid formation of overhanging faces.

CLEAN UP
No special requirements.

EMERGENCY PROCEDURES

SPECIAL EMERGENCY EQUIPMENT TO BE CARRIED

Protective clothing (gloves, boots, coveralls, headgear).
Self-contained breathing apparatus.
Spray nozzles.

EMERGENCY PROCEDURES

Wear protective clothing and self-contained breathing apparatus.

EMERGENCY ACTION IN THE EVENT OF FIRE

Use copious quantities of water, which is best applied in the form of a spray to avoid disturbing the surface of the material. The material may fuse or melt, in which condition application of water may result in extensive scattering of the molten materials. Exclusion of air or the use of CO_2 will not control the fire. Due consideration should be given to the effect on the stability of the ship due to the accumulated water.

MEDICAL FIRST AID

Refer to the Medical First Aid Guide (MFAG) as amended.

REMARKS
Material is non-combustible unless contaminated.

STAINLESS STEEL GRINDING DUST

DESCRIPTION
Brown lumps: Moisture content 1% - 3%. May give off dust.

CHARACTERISTICS

ANGLE OF REPOSE	BULK DENSITY (kg/m^3)	STOWAGE FACTOR (m^3/t)
Not applicable	2381	0.42
SIZE	**CLASS**	**GROUP**
Lumps: 75 mm - 380 mm	Not applicable	C

HAZARD
No special hazards.

This cargo is non-combustible or has a low fire-risk.

STOWAGE & SEGREGATION
No special requirements.

HOLD CLEANLINESS
No special requirements.

WEATHER PRECAUTIONS
No special requirements.

LOADING
Trim in accordance with the cargo information required by SOLAS VI/2. If any doubt exists, trim reasonably level to the boundaries of the cargo space so as to minimize the risk of shifting and to ensure that adequate stability will be maintained during the voyage.

As the density of the cargo is extremely high, care should be taken to ensure that the cargo is evenly spread across the tanktop to equalize the weight distribution. Do not pile the cargo in the centre of the hatch during loading.

PRECAUTIONS
Protect machinery, accommodation and equipment from dust.

Persons involved in cargo handling should wear protective clothing, goggles and dust filter masks.

VENTILATION
Ventilation not required.

CARRIAGE
No special requirements.

DISCHARGE
No special requirements.

CLEAN UP
No special requirements.

STONE CHIPPINGS

DESCRIPTION

CHARACTERISTICS

ANGLE OF REPOSE	BULK DENSITY (kg/m^3)	STOWAGE FACTOR (m^3/t)
Not applicable	1408	0.71
SIZE	**CLASS**	**GROUP**
Fines to 25 mm	Not applicable	C

HAZARD
No special hazards.

This cargo is non-combustible or has a low fire-risk.

STOWAGE & SEGREGATION
No special requirements.

HOLD CLEANLINESS
No special requirements.

WEATHER PRECAUTIONS
No special requirements.

LOADING
Trim in accordance with the cargo information required by SOLAS VI/2. If any doubt exists, trim reasonably level to the boundaries of the cargo space so as to minimize the risk of shifting and to ensure that adequate stability will be maintained during the voyage.

PRECAUTIONS
No special requirements.

VENTILATION
Ventilation not required.

CARRIAGE
No special requirements.

DISCHARGE
No special requirements.

CLEAN UP
No special requirements.

SUGAR

DESCRIPTION
Depending on type, sugar may be either brown or white granules, with a very low moisture content to the order of 0% to 0.05%.

CHARACTERISTICS

ANGLE OF REPOSE	BULK DENSITY (kg/m^3)	STOWAGE FACTOR (m^3/t)
Not applicable	625 - 1000	1.00 - 1.60
SIZE	**CLASS**	**GROUP**
Granules-up to 3 mm	Not applicable	C

HAZARD
As sugar dissolves in water, ingress of water may result in the creation of air pockets in the body of the cargo with the ship's motion. The hazards are then similar to the hazards presented by cargoes which may liquefy. In case of ingress of water into the holds, the risk to the stability of the ship through dissolution of sugar (formation of a liquid base and shifting of cargo), should be recognized.

STOWAGE & SEGREGATION
No special requirements.

HOLD CLEANLINES
No special requirements.

WEATHER PRECAUTIONS
Sugar is highly soluble. Do not handle cargo during precipitation keep dry, close hatches that are not being worked.

LOADING
Trim in accordance with the cargo information required by SOLAS VI/2. If any doubt exists, trim reasonably level to the boundaries of the cargo space so as to minimize the risk of shifting and to ensure that adequate stability will be maintained during the voyage.

PRECAUTIONS
No special precautions.

VENTILATION
Ventilation not required.

CARRIAGE
Precaution should be taken to prevent water entering the holds.

DISCHARGE
No special requirements.

CLEAN UP
No special requirements.

SULPHATE OF POTASH AND MAGNESIUM

DESCRIPTION
Granular light brown material. Solution in water is almost neutral. May have a slight odour, depending on the process of manufacturer. Melting point: 72°C. Moisture: 0.02%.

CHARACTERISTICS

ANGLE OF REPOSE	BULK DENSITY (kg/m^3)	STOWAGE FACTOR (m^3/t)
Not applicable	1000 - 1124	0.89 - 1.00
SIZE	**CLASS**	**GROUP**
Not applicable	Not applicable	C

HAZARD
No special hazards.

This cargo is non-combustible or has a low fire-risk.

STOWAGE & SEGREGATION
No special requirements.

HOLD CLEANLINESS
Clean and dry without any residue of previous cargoes.

WEATHER PRECAUTIONS
Do not handle cargo during precipitation, keep dry, close hatches that not being worked.

LOADING
Trim in accordance with the cargo information required by SOLAS VI/2. If any doubt exists, trim reasonably level to the boundaries of the cargo space so as to minimize the risk of shifting and to ensure that adequate stability will be maintained during the voyage.

PRECAUTIONS
No special requirements.

VENTILATION
Ventilation not required.

CARRIAGE
No special requirements.

DISCHARGE
No special requirements.

CLEAN UP
No special requirements.

SULPHUR (lump and coarse grained) UN 1350

DESCRIPTION
A mineral substance found free in volcanic countries. Yellow in colour, brittle, insoluble in water, but readily fusible by heat. Sulphur is loaded in a damp or wet condition.

CHARACTERISTICS

ANGLE OF REPOSE	BULK DENSITY (kg/m^3)	STOWAGE FACTOR (m^3/t)
Not applicable	1053 - 1176	0.85 - 0.95
SIZE	**CLASS**	**GROUP**
Slate to 10 mm granules & prills to 5 mm	4.1	B

HAZARDS
Flammability and dust explosion especially during loading and unloading and after discharge and cleaning.

This cargo is non-combustible or has a low fire-risk.

STOWAGE & SEGREGATION
"Separated from" foodstuffs.

HOLD CLEANLINESS
Clean and dry without any residue of previous cargoes.

Must be thoroughly clean and washed with fresh water.

WEATHER PRECAUTIONS
No special requirements.

LOADING
Trim in accordance with the cargo information required by SOLAS VI/2. If any doubt exists, trim reasonably level to the boundaries of the cargo space so as to minimize the risk of shifting and to ensure that adequate stability will be maintained during the voyage.

PRECAUTIONS
Ignites readily. Fine grained sulphur (flowers of sulphur) should NOT be transported in bulk.

When involved in a fire, toxic, very irritating and suffocating gas is evolved. Forms explosive and sensitive mixtures with most oxidizing material. Bulk Sulphur has a liability to dust explosion, which may occur especially after discharge and during cleaning. Holds should be limewashed on trimming plates and tank tops. Upper sections should have a sound coating of paint.

Seal hatches tightly. Electrical circuits in cargo and adjacent spaces, which are unsuitable for use in an explosive atmosphere, are to be isolated by removal of links in the system other than fuses. Any hold ventilators should have spark-arresting screens fitted.

VENTILATION
Surface ventilation required.

CARRIAGE
Pump bilge wells regularly to prevent accumulation of water/acid solution.

DISCHARGE
See precautions.

CLEAN UP
There is a possibility of dust explosion, especially after discharge and during cleaning. It is strongly recommended that holds are washed out with fresh water and NOT swept. Ensure that all residues are washed away and the holds thoroughly dried. Wet dust or residues will form highly corrosive sulphurous acid, which is extremely dangerous to personnel and will, of course, corrode steel.

Persons involved in cleaning up should wear protective clothing, including goggles and facemasks.

EMERGENCY PROCEDURES

SPECIAL EMERGENCY EQUIPMENT TO BE CARRIED Self-contained breathing apparatus.
EMERGENCY PROCEDURES Wear self-contained breathing apparatus. **EMERGENCY ACTION IN THE EVENT OF FIRE** Batten down; use ship's fixed fire-fighting installation if available. Exclusion of air may be sufficient to control the fire. **Do not use water**. **MEDICAL FIRST AID** Refer to the Medical First Aid (MFAG) as amended.

SUPERPHOSPHATE

DESCRIPTION
Greyish-white. Moisture: 0% to 7% . Hygroscopic.

CHARACTERISTICS

ANGLE OF REPOSE	BULK DENSITY (kg/m^3)	STOWAGE FACTOR (m^3/t)
30° - 40°	1000 - 1190	0.81 - 1.00
SIZE	**CLASS**	**GROUP**
Granular, fines and powder to 0.15 mm diameter	Not applicable	C

HAZARD
No special hazards.

This cargo is non-combustible or has a low fire-risk.

STOWAGE & SEGREGATION
No special requirements.

HOLD CLEANLINESS
Clean and dry without any residue of previous cargoes.

WEATHER PRECAUTIONS
Do not handle cargo during precipitation, keep dry, close hatches that are not being worked.

LOADING
Trim in accordance with the cargo information required by SOLAS VI/2. If doubt exists, trim reasonably level to the boundaries of the cargo space so as to minimize the risk of shifting and to ensure that adequate stability will be maintained during the voyage.

PRECAUTIONS
No special requirements.

VENTILATION
Do not ventilate.

CARRIAGE
When carried in bulk a danger of acid corrosion to steelwork exists if moisture is introduced by condensation, cargo heating or hatch covers leaking.

Close attention must be given to hatch sealing. This cargo will decompose burlap or canvas cloth covering bilge wells.

DISCHARGE
Superphosphate is hygroscopic and will cake if wet. If cargo has hardened trimming may be necessary to avoid formation of overhanging faces.

CLEAN UP
No special requirements.

SUPERPHOSPHATE (triple granular)

DESCRIPTION
Granular in form, dark grey colour and, depending on its source, can be dusty. Hygroscopic.

CHARACTERISTICS

ANGLE OF REPOSE	BULK DENSITY (kg/m^3)	STOWAGE FACTOR (m^3/t)
Not applicable	813 - 909	1.10 -1.23
SIZE	**CLASS**	**GROUP**
2 mm - 4 mm	Not applicable	C

HAZARD
No special hazards.

This cargo is non-combustible or has a low fire-risk.

STOWAGE & SEGREGATION
No special requirements.

HOLD CLEANLINESS
Clean and dry without any residue of previous cargoes.

WEATHER PRECAUTIONS
Do not handle cargo during precipitation, keep dry, close hatches that are not being worked.

LOADING
Trim in accordance with the cargo information required by SOLAS VI/2. If any doubt exists, trim reasonably level to the boundaries of the cargo space so as to minimize the risk of shifting and to ensure that adequate stability will be maintained during the voyage.

PRECAUTIONS
Hold trimming plates and tank tops should be lime washed to prevent corrosion.

VENTILATION
Do not ventilate.

CARRIAGE
When carried in bulk a danger of acid corrosion to steelwork exists if moisture is introduced by condensation, cargo heating or hatch covers leaking. Close attention must be given to hatch sealing. This cargo will decompose burlap or canvas cloth covering bilge wells.

DISCHARGE
Superphosphate is hygroscopic and will cake when wet. If cargo has hardened trimming may be necessary to avoid the formation of overhanging faces.

CLEAN UP
Pay particular attention to bilge wells.

TACONITE PELLETS

DESCRIPTION
Ore. Grey, round steel pellets. Moisture 2%.

CHARACTERISTICS

ANGLE OF REPOSE	BULK DENSITY (kg/m^3)	STOWAGE FACTOR (m^3/t)
Not applicable	599 - 654	1.53 - 1.67
SIZE	**CLASS**	**GROUP**
Pellets to 15 mm diameter	Not applicable	C

HAZARD
No special hazards.

This cargo is non-combustible or has a low fire-risk.

STOWAGE & SEGREGATION
No special requirements.

HOLD CLEANLINESS
No special requirements.

WEATHER PRECAUTIONS
No special requirements.

LOADING
Trim in accordance with the cargo information required by SOLAS VI/2. If doubt exists, trim reasonably level to the boundaries of the cargo space so as to minimize the risk of shifting and to ensure that adequate stability will be maintained during the voyage.

PRECAUTIONS
No special requirements.

VENTILATION
Ventilation not required.

CARRIAGE
No special requirements.

DISCHARGE
No special requirements.

CLEAN UP
No special requirements.

TALC

DESCRIPTION
Talc is an extremely soft, whitish, green or greyish natural hydrated magnesium silicate. It has a characteristic soapy, or greasy feel.

CHARACTERISTICS

ANGLE OF REPOSE	BULK DENSITY (kg/m^3)	STOWAGE FACTOR (m^3/t)
Not applicable	1370 - 1563	0.64 - 0.73
SIZE	**CLASS**	**GROUP**
Powdery to 100 mm lumps	Not applicable	C

HAZARD
No special hazards.

This cargo is non-combustible or has a low fire-risk.

STOWAGE & SEGREGATION
No special requirements.

HOLD CLEANLINESS
No special requirements.

WEATHER PRECAUTIONS
No special requirements.

LOADING
Trim in accordance with the cargo information required by SOLAS VI/2. If doubt exists, trim reasonably level to the boundaries of the cargo space so as to minimize the risk of shifting and to ensure that adequate stability will be maintained during the voyage.

PRECAUTIONS
No special requirements.

VENTILATION
Ventilation not required.

CARRIAGE
No special requirements.

DISCHARGE
No special requirements.

CLEAN UP
No special requirements.

TANKAGE

DESCRIPTION
The dried sweeping of animal matter from slaughterhouse floors. Very dusty.

CHARACTERISTICS

ANGLE OF REPOSE	BULK DENSITY (kg/m^3)	STOWAGE FACTOR (m^3/t)
Not applicable	Not applicable	Not applicable
SIZE	**CLASS**	**GROUP**
Not applicable	MHB	B

HAZARD
Subject to spontaneous heating and possible ignition. Possibly infectious.

STOWAGE & SEGREGATION
Segregation as required for class 4.2 materials.

"Separated by a complete cargo space or hold from" foodstuffs.

HOLD CLEANLINESS
Clean and dry without any residue of previous cargoes.

WEATHER PRECAUTIONS
No special requirements.

LOADING
Trim in accordance with the cargo information required by SOLAS VI/2. If any doubt exists, trim reasonably level to the boundaries of the cargo space so as to minimize the risk of shifting and to ensure that adequate stability will be maintained during the voyage.

PRECAUTIONS
Make sure bilge wells are clean, dry and covered to prevent cargo ingress.

Do not load if the temperature is above 38°C.

Persons involved in cargo handling should wear protective clothing, including goggles, and facemasks.

Protect machinery, accommodation and equipment from dust ingress.

VENTILATION
Ventilation not required.

CARRIAGE
Record the cargo temperature regularly each day for possible heating.

DISCHARGE
See precautions.

CLEAN UP
See precautions.

EMERGENCY PROCEDURES

SPECIAL EMERGENCY EQUIPMENT TO BE CARRIED Self-contained breathing apparatus.
EMERGENCY PROCEDURES Wear self-contained breathing apparatus. **EMERGENCY ACTION IN THE EVENT OF FIRE** Batten down; use ship's fixed fire-fighting installation. Use full protective clothing in case of fire situation. **MEDICAL FIRST AID** Refer to the Medical First Aid Guide (MFAG) as amended.

TAPIOCA

DESCRIPTION
Dry, dusty mixture of powder and granules.

CHARACTERISTICS

ANGLE OF REPOSE	BULK DENSITY (kg/m^3)	STOWAGE FACTOR (m^3/t)
32°	735	1.36
SIZE	**CLASS**	**GROUP**
Powder and granules	Not applicable	C

HAZARD
May heat spontaneously with oxygen depletion in the cargo space.

This cargo is non-combustible or has a low fire-risk.

STOWAGE & SEGREGATION
No special requirements.

HOLD CLEANLINESS
No special requirements.

WEATHER PRECAUTIONS
No special requirements.

LOADING
Trim in accordance with the cargo information required by SOLAS VI/2. If any doubt exists, trim reasonably level to the boundaries of the cargo space so as to minimize the risk of shifting and to ensure that adequate stability will be maintained during the voyage.

PRECAUTIONS
No special requirements.

VENTILATION
Surface ventilation required.

CARRIAGE
No special requirements.

DISCHARGE
Protect machinery, accommodation and equipment from dust.

Persons involved in cargo handling should wear protective clothing, goggles and dust filter masks.

CLEAN UP
No special requirements.

UREA

DESCRIPTION
White, granular, and odourless commodity. Moisture content is less than 1%. Hygroscopic.

CHARACTERISTICS

ANGLE OF REPOSE	BULK DENSITY (kg/m^3)	STOWAGE FACTOR (m^3/t)
28° - 45 °	645 - 855	1.17 - 1.56
SIZE	**CLASS**	**GROUP**
1 mm - 4 mm	Not applicable	C

HAZARD
No special hazards.

This cargo is non-combustible or has a low fire-risk.

STOWAGE & SEGREGATION
No special requirements.

HOLD CLEANLINESS
No special requirements.

WEATHER PRECAUTIONS
Do not handle cargo during precipitation, keep dry, close hatches that are not being worked.

LOADING
Trim in accordance with the cargo information required by SOLAS VI/2. If doubt exists, trim reasonably level to the boundaries of the cargo space so as to minimize the risk of shifting and to ensure that adequate stability will be maintained during the voyage.

PRECAUTION
No special requirements.

VENTILATION
Do not ventilate.

CARRIAGE
No special requirements.

DISCHARGE
Urea is hygroscopic and will cake if wet. If cargo has hardened trimming may be necessary to avoid formation of overhanging faces.

CLEAN UP
Urea (either pure or impure) will, in the presence of moisture, damage paintwork or corrode steel. Sweep, hose out and dry holds.

VANADIUM ORE

DESCRIPTION

CHARACTERISTICS

ANGLE OF REPOSE	BULK DENSITY (kg/m^3)	STOWAGE FACTOR (m^3/t)
Not applicable	1786	0.560
SIZE	**CLASS**	**GROUP**
Not applicable	MHB	B

HAZARD
Dust may be toxic.

This cargo is non-combustible or has a low fire-risk.

STOWAGE & SEGREGATION
Segregation as required for class 6.1 materials.
"Separated from" foodstuffs.

HOLD CLEANLINESS
No special requirements.

WEATHER PRECAUTIONS
No special requirements.

LOADING
Trim in accordance with the cargo information required by SOLAS VI/2. If doubt exists, trim reasonably level to the boundaries of the cargo space so as to minimize the risk of shifting and to ensure adequate stability will be maintained during the voyage.

PRECAUTIONS
Exposure of persons to dust should be minimized.

Persons involved in cargo handling should wear protective clothing, including goggles, and facemasks.

VENTILATION
Ventilation not required.

CARRIAGE
No special requirements.

DISCHARGE
See precautions.

CLEAN UP
No special requirements.

EMERGENCY PROCEDURES

SPECIAL EMERGENCY EQUIPMENT TO BE CARRIED Self-contained breathing apparatus.
EMERGENCY PROCEDURES Wear self-contained breathing apparatus. **EMERGENCY ACTION IN THE EVENT OF FIRE** Batten down; use ship's fixed fire fighting installation, if fitted. Exclusion of air may be sufficient to control fire. **MEDICAL FIRST AID** Refer to the Medical First Aid Guide (MFAG) as amended.

VERMICULITE

DESCRIPTION
A mineral of the mica group. Grey. Average moisture: 6% to 10%. May give off dust.

CHARACTERISTICS

ANGLE OF REPOSE	BULK DENSITY (kg/m^3)	STOWAGE FACTOR (m^3/t)
Not applicable	730	1.37
SIZE	**CLASS**	**GROUP**
3 mm	Not applicable	C

HAZARD
No special hazards.

This cargo is non-combustible or has a low fire-risk.

STOWAGE & SEGREGATION
No special requirements.

HOLD CLEANLINESS
No special requirements.

WEATHER PRECAUTIONS
No special requirements.

LOADING
Trim in accordance with the cargo information required SOLAS VI/2. If doubt exists, trim reasonably level to the boundaries of the cargo space so as to minimize the risk of shifting and to ensure that adequate stability will be maintained during the voyage.

PRECAUTIONS
Protect machinery, accommodation and equipment from dust.

Persons involved in cargo handling should wear protective clothing, goggles and dust filter masks.

VENTILATION
Ventilation not required.

CARRIAGE
No special requirements.

DISCHARGE
See precautions.

CLEAN UP
No special requirements.

WHITE QUARTZ

DESCRIPTION
99.6% silica content.

CHARACTERISTICS

ANGLE OF REPOSE	BULK DENSITY (kg/m^3)	STOWAGE FACTOR (m^3/t)
Not applicable	1639	0.61
SIZE	**CLASS**	**GROUP**
Lumps to 150 mm	Not applicable	C

HAZARD
No special hazards.
This cargo is non-combustible or has a low fire-risk.

STOWAGE & SEGREGATION
No special requirements.

HOLD CLEANLINESS
No special requirements.

WEATHER PRECAUTIONS
No special requirements.

LOADING
Trim in accordance with the cargo information required by SOLAS VI/2. If any doubt exists, trim reasonably level to the boundaries of the cargo space so as to minimize the risk of shifting and to ensure that adequate stability will be maintained during the voyage.

PRECAUTIONS
No special requirements.

VENTILATION
Ventilation not required.

CARRIAGE
No special requirements.

DISCHARGE
No special requirements.

CLEAN UP
No special requirements.

WOODCHIPS

DESCRIPTION
Natural timber mechanically chipped into the approximate size of a business card.

CHARACTERISTICS

ANGLE OF REPOSE	BULK DENSITY (kg/m^3)	STOWAGE FACTOR (m^3/t)
Not applicable	326	3.07
SIZE	**CLASS**	**GROUP**
As above	MHB	B

HAZARD
This material possesses a chemical hazard. Some shipments may be subject to oxidation leading to depletion of oxygen and increase of carbon dioxide in cargo and adjacent spaces.

With moisture content of 15% or more this cargo has a low fire-risk. As the moisture content decreases the fire risk increases. When dry, woodchips can be easily ignited by external sources; are readily combustible and can ignite by friction.

STOWAGE & SEGREGATION
Segregation as for class 4.1 materials.

HOLD CLEANLINESS
No special requirements.

WEATHER PRECAUTIONS
No special requirements.

LOADING
Trim in accordance with the cargo information required by SOLAS VI/2. If doubt exists, trim reasonably level to the boundaries of the cargo space so as to minimize the risk of shifting and to ensure adequate stability will be maintained during the voyage.

PRECAUTIONS
Entry of personnel into cargo spaces should not be permitted until tests have been carried out and it has been established that the oxygen content has been restored to a normal level.

In dry weather, dust which settles on deck, will dry out quickly and is easily ignited. Suitable measures should be taken to prevent fire.

VENTILATION
See precautions.

CARRIAGE
No special requirements.

DISCHARGE
See precautions.

CLEAN UP
No special requirements.

EMERGENCY PROCEDURES

SPECIAL EMERGENCY EQUIPMENT TO BE CARRIED Nil
EMERGENCY PROCEDURES Nil **EMERGENCY ACTION IN THE EVENT OF FIRE** Batten down; use ship's fixed fire-fighting installation if fitted. Exclusion of air may be sufficient to control fire. **MEDICAL FIRST AID** Refer to Medical First Aid Guide (MFAG) as amended.

WOOD PELLETS

DESCRIPTION

The Wood Pellets are light blond to chocolate brown in colour; very hard and cannot be easily squashed. Wood Pellets have a typical specific density between 1,100 to 1,700 kg/m^3 and a bulk density of 600 to 750 kg/m^3. Wood Pellets are made of sawdust, planer shavings and other wood waste such as bark coming out of the lumber manufacturing processes. Normally there are no additives or binders blended into the pellet, unless specified. The raw material is fragmented, dried and extruded into pellet form. The raw material is compressed approximately 3.5 times and the finished Wood Pellets typically have a moisture content of 4-8 %. Wood Pellets is used as a fuel in district heating and electrical power generation as well as a fuel for small space heaters such as stoves and fireplaces.

Wood Pellets are also used as animal bedding due to the absorption characteristics. Such Wood Pellets typically have a moisture content of 8-10%.

CHARACTERISTICS

ANGLE OF REPOSE	BULK DENSITY (kg/m^3)	STOWAGE FACTOR (m^3/t)
Approximately 30 degrees	600 - 750	1.4 - 1.6
SIZE	**CLASS**	**GROUP**
Cylindrical with 3 to 12 mm diameter 10 to 20 mm	MHB	B

HAZARD

Shipments may be subject to oxidation leading to depletion of oxygen and increase of carbon monoxide and carbon dioxide in cargo and communicating spaces.

Swelling if exposed to moisture. Wood Pellets may ferment over time if moisture content is over 15% leading to generation of asphyxiating and flammable gases which may cause spontaneous combustion.

Handling of Wood Pellets may cause dust to develop. Risk of explosion at high dust concentration.

STOWAGE AND SEGREGATION
Segregate as for class 4.1 materials.

HOLD CLEANLINESS
Clean and dry without any residue of previous cargoes.

WEATHER PRECAUTIONS
Cargo should be protected from precipitation during handling operations and be kept as dry as reasonably practicable.

LOADING
Trim in accordance with the cargo information required by SOLAS VI/2. If doubt exists, trim reasonably level to the boundaries of the cargo space so as to minimize the risk of shifting and to ensure that adequate stability will be maintained during the voyage.

PRECAUTIONS
Entry of personnel into cargo spaces or commutating spaces should not be permitted until tests have been carried out and it has been established that the oxygen content has been restored to a normal level. Avoid close or direct contact of Wood Pellets and cargo hold lighting such as hot halogen lamps. Most wood material has an ignition temperature of approximately 270°C. Fuses to such lights should be removed or secured while cargo is present in the hold.

VENTILATION
Do not ventilate.

CARRIAGE
Precautions should be taken to avoid water entering the holds.

DISCHARGE
See precautions.

CLEAN UP
Avoid generating high concentrations of dust during handling of material. No other special requirements.

EMERGENCY PROCEDURES

SPECIAL EMERGENCY EQUIPMENT TO BE CARRIED Oxygen or combined carbon monoxide/dioxide meter when entering confined spaces, which has not been properly ventilated.
EMERGENCY PROCEDURES Nil **EMERGENCY ACTION IN THE EVENT OF FIRE** Batten down; use ship's fixed fire-fighting installation. Exclusion of air may be sufficient to control fire. Extinguish fire with carbon dioxide, foam or water **MEDICAL FIRST AID** Refer to the Medical First Aid Guide (MFAG) as amended.

WOOD PULP PELLETS

DESCRIPTION
The pellets are brown in colour; very hard and cannot be easily squashed. They are light and are about half the size of a bottle cork. The pellets are made of compacted woodchips.

CHARACTERISTICS

ANGLE OF REPOSE	BULK DENSITY (kg/m^3)	STOWAGE FACTOR (m^3/t)
Not applicable	326	3.07
SIZE	**CLASS**	**GROUP**
approx. 15 mm x 20 mm	MHB	B

HAZARD
This cargo possesses a chemical hazard. Some shipments may be subject to oxidation leading to depletion of oxygen and increase of carbon dioxide in cargo and adjacent spaces.

With moisture content of 15% or more this cargo has a low fire-risk. As the moisture content decreases, the fire risk increases.

STOWAGE & SEGREGATION
Segregate as for class 4.1 materials.

HOLD CLEANLINESS
Clean and dry without any residue of previous cargoes.

WEATHER PRECAUTIONS
No special requirements.

LOADING
Trim in accordance with the cargo information required by SOLAS VI/2. If doubt exists, trim reasonably level to the boundaries of the cargo space so as to minimize the risk of shifting and to ensure that adequate stability will be maintained during the voyage.

PRECAUTIONS
Entry of personnel into cargo spaces should not be permitted until tests have been carried out and it has been established that the oxygen content has been restored to a normal level.

In dry weather, dust which settles on deck, will dry out quickly and is easily ignited. Suitable measures should be taken to prevent fire.

VENTILATION
See precautions.

CARRIAGE
No special requirements.

DISCHARGE
See precautions.

CLEAN UP
No special requirements.

EMERGENCY PROCEDURES

SPECIAL EMERGENCY EQUIPMENT TO BE CARRIED Nil
EMERGENCY PROCEDURES Nil **EMERGENCY ACTION IN THE EVENT OF FIRE** Batten down; use ship's fixed fire-fighting installation if fitted. Exclusion of air may be sufficient to control fire. **MEDICAL FIRST AID** Refer to the Medical First Aid Guide (MFAG) as amended.

ZINC ASHES UN 1435

Shipments require the approval of the competent authority of the countries of shipment and the flag State of the ship.

DESCRIPTION

CHARACTERISTICS

ANGLE OF REPOSE	BULK DENSITY (kg/m^3)	STOWAGE FACTOR (m^3/t)
Not applicable	Not applicable	1.11
SIZE	**CLASS**	**GROUP**
Not applicable	4.3	B

HAZARD
In contact with moisture or water liable to give off hydrogen, a flammable gas, and toxic gases.

This cargo is non-combustible or has a low fire-risk.

STOWAGE & SEGREGATION
"Separated from" foodstuffs and all class 8 liquids.

HOLD CLEANLINESS
Clean and dry.

WEATHER PRECAUTIONS
Do not load cargo during precipitation, keep dry, close hatches that are not being worked.

LOADING
Trim in accordance with the cargo information required by SOLAS VI/2. If doubt exists, trim reasonably level to the boundaries of the cargo space so as to minimize the risk of shifting and to ensure that adequate stability will be maintained during the voyage.

PRECAUTIONS
Reject any damp material or any material, which is known to have been wetted.

Eliminate possible ignition sources. This includes hotwork, burning, smoking, electrical sparking etc. during handling and transport.

VENTILATION
Continuous mechanical surface ventilation required. If maintaining ventilation endangers the ship or the cargo, it may be interrupted unless there is a risk of explosion or other danger due to interruption of the ventilation. In any case it must be maintained for a reasonable period prior to discharge.

CARRIAGE
A suitable detector for quantitative measurements of hydrogen should be on board. Regularly monitor for hydrogen. Record and keep measurements.

DISCHARGE
See precautions.

CLEAN UP
Double sweep clean. Avoid using water because of danger of gas.

EMERGENCY PROCEDURES

SPECIAL EMERGENCY EQUIPMENT TO BE CARRIED Protective clothing (gloves, boots, coveralls, headgear). Self-contained breathing apparatus.
EMERGENCY PROCEDURES Wear protective clothing and self-contained breathing apparatus. **EMERGENCY ACTION IN THE EVENT OF FIRE** Batten down; use ship's fixed fire-fighting installation if available. **Do not use water.** **MEDICAL FIRST AID** Refer to the Medical First Aid Guide (MFAG) as amended.

ZIRCONSAND

DESCRIPTION
Usually fine white to yellow, very abrasive extracted from ilmenite sand. May be dusty. Shipped dry.

CHARACTERISTICS

ANGLE OF REPOSE	BULK DENSITY (kg/m^3)	STOWAGE FACTOR (m^3/t)
Not applicable	2600 - 3000	0.33 - 0.36
SIZE	**CLASS**	**GROUP**
0.15 mm or less	Not applicable	C

HAZARD
No special hazard.

This cargo is non-combustible or has a low fire-risk.

STOWAGE & SEGREGATION
No special precautions.

HOLD CLEANLINESS
No special requirements.

WEATHER PRECAUTIONS
Do not load cargo during precipitation, keep dry, close hatches that are not being worked.

LOADING
Trim in accordance with the cargo information required by SOLAS VI/2. If doubt exists, trim reasonably level to the boundaries of the cargo space so as to minimize the risk of shifting and to ensure that adequate stability will be maintained during the voyage.

As the density of the cargo is extremely high, care should be taken to ensure that the cargo is evenly spread across the tanktop to equalize the weight distribution. Do not pile the cargo in the centre of the hatch during loading.

PRECAUTIONS
Bilge plates should be perforated and covered with two layers of burlap to protect bilge wells against sand ingress.

Persons involved in cargo handling should wear protective clothing, including goggles, and facemasks.

VENTILATION
Ventilation not required.

CARRIAGE
No special requirements.

DISCHARGE
See precautions.

CLEAN UP
No special requirements.

APPENDIX 2

LABORATORY TEST PROCEDURES, ASSOCIATED APPARATUS AND STANDARDS

1 Test procedures for materials which may liquefy and associated apparatus

Three methods of testing for the transportable moisture limit (TML) are currently in general use:

.1 flow table test;

.2 penetration test;

.3 Proctor/Fagerberg test.

As each method has its advantages, the selection of the test method should be determined by local practices or by the appropriate authorities.

1.1 *Flow table test procedure*

1.1.1 *Scope*

The flow table is generally suitable for mineral concentrates or other fine material with a maximum grain size of 1 mm. It may also be applicable to materials with a maximum grain size up to 7 mm. It will not be suitable for materials coarser than this and may also not give satisfactory results for some materials with high clay content. If the flow table test is not suitable for the material in question, the procedures to be adopted should be those approved by the authority of the port State.

The test described below provides for determination of:

.1 the moisture content of a sample of cargo, hereinafter referred to as the test material;

.2 the flow moisture point (FMP) of the test material under impact or cyclic forces of the flow table apparatus; and

.3 the transportable moisture limit of the test material.

1.1.2 *Apparatus (see figure 1.1.2)*

.1 Standard flow table and frame (ASTM Designation (C230-68) – see 3).

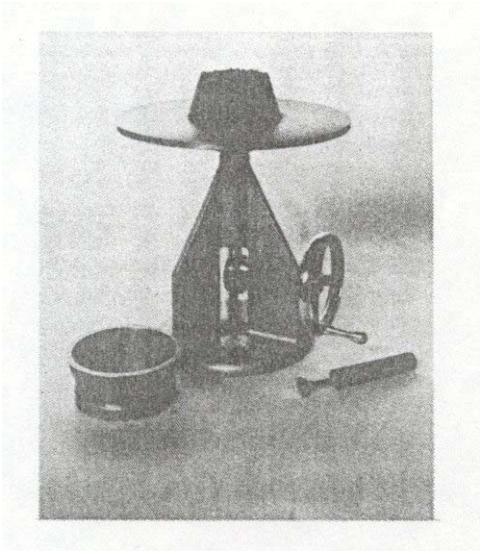

Figure 1.1.2 ***Flow table and accessory apparatus***

.2 Flow table mounting (ASTM Designation (C230-68) – see 3).

.3 Mould (ASTM Designation (C230-68) – see 3).

.4 Tamper (see figure 1.1.2.4): the required tamping pressure may be achieved by using calibrated, spring-loaded tampers (examples are included in figure 1.1.2.4) or some other suitable design of tamper that allows a controlled pressure to be applied via a 30 mm diameter tamper head.

.5 Scales and weights (ASTM Designation (C109-73) – see 3) and suitable sample containers.

.6 Glass graduated measuring cylinder and burette having capacities of 100-200 m*l* and 10 m*l,* respectively.

.7 A hemispherical mixing bowl approximately 30 cm diameter, rubber gloves and drying dishes or pans. Alternatively, an automatic mixer of similar capacity can be used for the mixing operations. In this case, care should be exercised to ensure that the use of such a mechanical mixer does not reduce the particle size or consistency of the test material.

.8 A drying oven with controlled temperature up to approximately 110°C. This oven should be without air circulation.

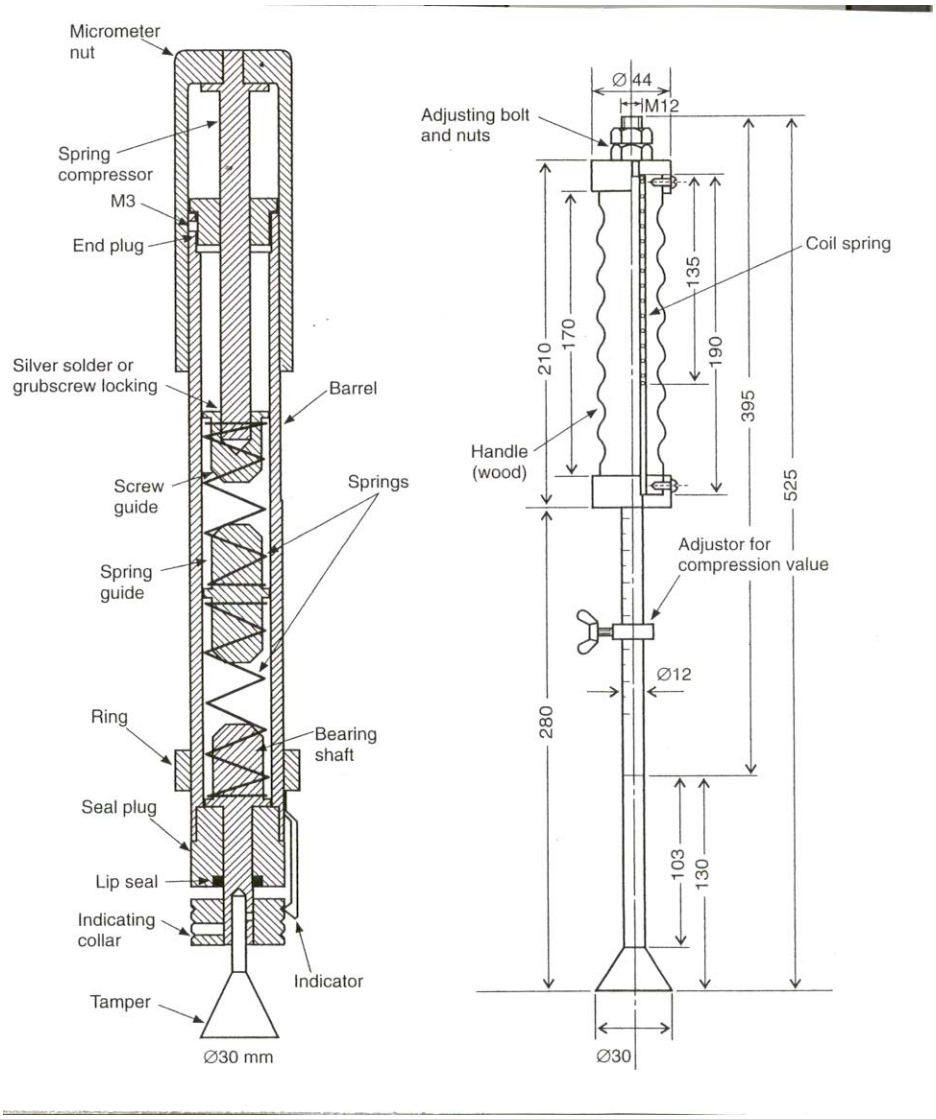

Figure 1.1.2.4 ***Examples of spring-loaded tampers***

1.1.3 *Temperature and humidity*

It is preferable to work in a room where the samples will be protected from excessive temperatures, air currents and humidity variations. All phases of the material preparation and testing procedure should be accomplished in a reasonable space of time to minimize moisture losses and, in any event, within the day of commencement. Where possible, sample containers should be covered with plastic film or other suitable cover.

1.1.4 *Procedure*

The quantity of material required for a flow moisture test will vary according to the specific gravity of the material to be tested. It will range from approximately 2 kg for coal to 3 kg for mineral concentrates. It should be collected as a representative sample of the cargo being shipped. Experience has shown that more accurate test results will be obtained by ensuring that the moisture content of the test sample is increased rather than decreased towards the FMP.

Consequently, it is recommended that a preliminary flow moisture test should be conducted, generally in accordance with the following, to indicate the condition of the test sample, i.e. the quantity of water and the rate at which it is to be added or whether the sample should be air-dried to reduce its moisture content before commencing the main flow moisture test.

1.1.4.1 Preparation of the test sample

The representative sample of test material is placed in the mixing bowl and thoroughly mixed. Three subsamples (A), (B) and (C) are removed from the mixing bowl as follows: about one fifth of the sample (A) should be immediately weighed and placed in the drying oven to determine the moisture content of the sample "as received". Two further subsamples, each of about two fifths of the gross weight, should then be taken, one (B) for the preliminary FMP test and the other (C) for the main FMP determination.

.1 *Filling the mould.* The mould is placed on the centre of the flow table and filled in three stages with the material from the mixing bowl. The first charge, after tamping, should aim to fill the mould to approximately one third of its depth. The quantity of sample required to achieve this will vary from one material to another, but can readily be established after some experience has been gained of the packing characteristics of the material being tested.

The second charge, after tamping, should fill the mould to about two thirds of its depth and the third and final charge, after tamping, should reach to just below the top of the mould (see figure 1.1.4.2).

.2 *Tamping procedure.* The aim of tamping is to attain a degree of compaction similar to that prevailing at the bottom of a shipboard cargo of the material being tested. The correct pressure to be applied is calculated from:

Tamping pressure (Pa) = Bulk density of cargo (kg/m^3)
x Maximum depth of cargo (m)
x Gravity acceleration (m/s^2)

Bulk density can be measured by a single test, using the Proctor C apparatus described in ASTM Standard D-698 or JIS-A-1210, on a sample of the cargo at the proposed moisture content of loading.

When calculating the tamping pressure, if no information concerning cargo depth is available the maximum likely depth should be used.

Alternatively, the pressure may be estimated from table 1.1.4.1.

The number of tamping actions (applying the correct, steady pressure each time) should be about 35 for the bottom layer, 25 for the middle and 20 for the top layer, tamping successively over the area completely to the edges of the sample to achieve a uniformly flat surface for each layer.

.3 *Removal of the mould.* The mould is tapped on its side until it becomes loose, leaving the sample in the shape of a truncated cone on the table.

Table 1.1.4.1

Typical cargo	Bulk density (kg/m^3)	Maximum cargo depth			
		2 m	5 m	10 m	20 m
		← Tamper pressure (kPa) →			
Coal	1000	20 [1.4]	50 [3.5]	100 [7.1]	200 [14.1]
	2000	40 [2.8]	100 [7.1]	200 [14.1]	400 28.3]
Metal ore	3000	60 [4.2]	150 [10.6]	300 [21.2]	600 [42.4]
Iron ore conc.	4000	80 [5.7]	200 [14.1]	400 [28.3]	800 [56.5]
Lead ore conc.	5000	100 [7.1]	250 [17.7]	500 [35.3]	1000 [70.7]
(values in square brackets are equivalent kgf when applied via a 30 mm diameter tamper head)					

1.1.4.2 The preliminary flow moisture test

.1 Immediately after removing the mould, the flow table is raised and dropped up to 50 times through a height of 12.5 mm at a rate of 25 times per minute. If the material is below the FMP, it usually crumbles and bumps off in fragments with successive drops of the table (see figure 1.1.4-3)

.2 At this stage, the flow table is stopped and the material returned to the mixing bowl, where 5-10 m*l*of water, or possibly more, is sprinkled over the surface and thoroughly mixed into the material, either with rubber-gloved fingers or an automatic mixer.

The mould is again filled and the flow table is operated as described in 1.1.4.2.1 for up to 50 drops. If a flow state is not developed, the process is repeated with further additions of water until a flow state has been reached.

.3 *Identification of a flow state.* The impacting action of the flow table causes the grains to rearrange themselves to produce compaction of the mass. As a result, the fixed volume of moisture contained in the material at any given level increases as a percentage of the total volume. A flow state is considered to have been reached when the moisture content and compaction of the sample produce a level of saturation such that plastic deformation occurs*. At this stage, the moulded sides of the sample may deform, giving a convex or concave profile (see figure 1.1.4-4).

* In certain conditions, the diameter of the cone may increase before the flow moisture point is reached, due to low friction between the grains rather than to plastic flow. This must not be mistaken for a flow state.

With repeated action of the flow table, the sample continues to slump and to flow outwards. In certain material, cracks may also develop on the top surface. Cracking, with the appearance of free moisture, is not, however, an indication of development of a flow state. In most cases, measurement of the deformation is helpful in deciding whether or not plastic flow has occurred. A template which, for example, will indicate an increase in diameter of up to 3 mm in any part of the cone is a useful guide for this purpose. Some additional observations may be useful. For example: when the (increasing) moisture content is approaching the FMP, the sample cone begins to show a tendency to stick to the mould. Further, when the sample is pushed off the table, the sample may leave tracks (stripes) of moisture on the table. If such stripes are seen, the moisture content may be above the FMP: the absence of tracks (stripes) is not necessarily an indication of being below the FMP.

Measuring the diameter of the cone, at the base or at half height, will always be useful. By addition of water in increments of 0.4% to 0.5% and applying 25 drops of the flow table, the first diameter increase will generally be between 1 and 5 mm and after a further increment of water the base diameter will have expanded by between 5 and 10 mm.

.4 As an alternative to the procedure described above, for many concentrates a fast way of finding the approximate FMP is as follows:

When the moisture content is definitely beyond the FMP, measure the diameter after 25 drops, repeat the test after adding a further increment of water, measure the diameter and draw a diagram as illustrated in figure 1.1.4-1, showing increase in diameter plotted against moisture content. A straight line drawn through the two points will cross the moisture content axis close to the FMP.

Having completed the preliminary FMP test, the sample for the main test is adjusted to the required level of moisture content (about 1% to 2%) below the flow point.

1.1.4.3 Main flow moisture test

When a flow state has been reached in the preliminary test, the moisture content of subsample (C) is adjusted to about 1% to 2% less than the last value which did not cause flow in the preliminary test (this is suggested simply to avoid starting the main test too close to the FMP and then having to waste time air-drying it and starting again). The final test is then carried out on this adjusted sample in the same manner as for the preliminary test, but in this case with the addition of water in increments of no more than 0.5% of the mass of the test material (the lower the "preliminary" FMP, the smaller the increments should be). After each stage, the whole moulded sample should be placed in a container, weighed immediately and retained for moisture determination if required. This will be necessary if the sample flowed or if the next, slightly wetter, sample flows. If not required it may be returned to the mixing bowl.

When a flow state has been reached, the moisture content should be determined on two samples, one with moisture content just above the FMP and the other with moisture content just below the FMP. The difference between the two values should then be 0.5% or less, and the FMP is taken as the mean of these two values.

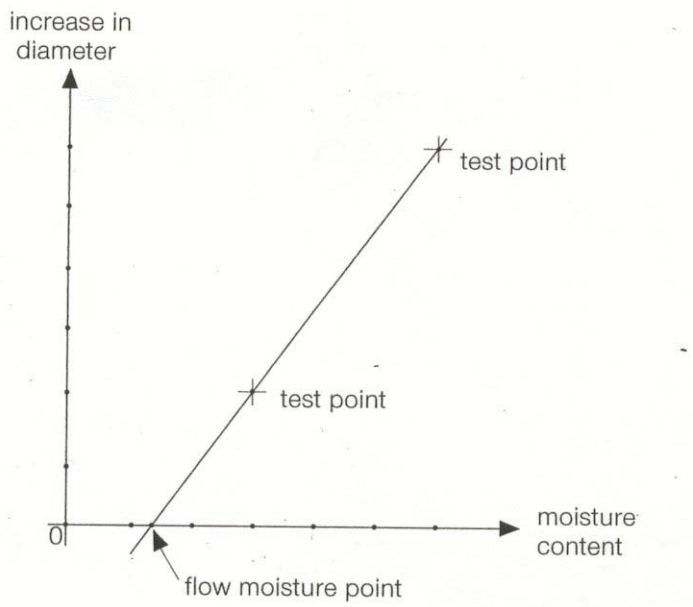

Figure 1.1.4-1

Figure 1.1.4-2

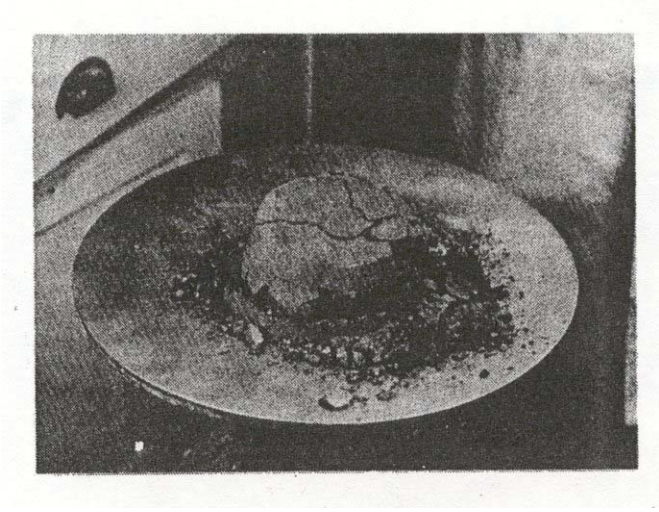

Figure 1.1.4-3

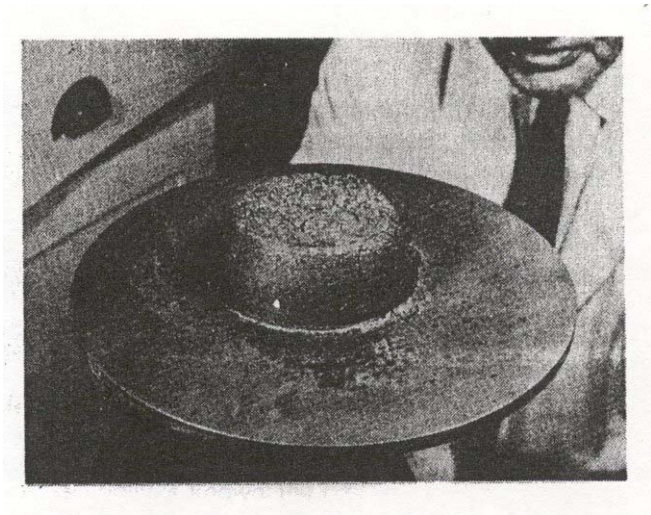

Figure 1.1.4-4

1.1.4.4 Determination of moisture content

Introduction

It should be noted that, for many materials, there are recognized international and national methods for determining moisture content. These methods, or ones that have been established to give equivalent results, should be followed.

Concentrates and similar materials

It is clearly important that the samples should be dried to a constant mass. In practice, this is ascertained after a suitable drying period at 105°C by weighing the sample successively with an interval of several hours elapsing. If the mass remains constant, drying has been completed, whereas if the mass is still decreasing, drying should be continued.

The length of the drying period depends upon many variables, such as the disposition of the material in the oven, the type of container used, the particle size, the rate of heat transfer, etc. It may be that a period of five hours is ample for one concentrate sample, whereas it is not sufficient for another. Sulphide concentrates tend to oxidize, and therefore the use of drying ovens with air circulation systems is not recommended for these materials, nor should the test sample be left in the drying oven for more than four hours.

Coal

The recommended methods for determination of the moisture content are those described in ISO 589-1974, "Hard Coal – Determination of Total Moisture". This method, or ones that have been established to give equivalent results, should be followed.

Calculation of moisture content, FMP and transportable moisture limit:

Taking m_1 as the exact mass of the subsample "as received" (see 1.1.4.1),

Taking m_2 as the exact mass of the "as received" subsample, after drying,

Taking m_3 as the exact mass of the sample just above the flow state (see 1.1.4.3),

Taking m_4 as the exact mass of the sample just above the flow state, after drying,

Taking m_5 as the exact mass of the sample just below the flow state (see 1.1.4.3),

Taking m_6 as the exact mass of the sample just below the flow state after drying,

Then:

.1 The moisture content of the concentrate "as received" is

$$\frac{(m_1 - m_2)}{m_1} \times 100, \textit{ in per cent} \qquad (1.1.4.4.1)$$

.2 The FMP of the material is

$$\frac{\frac{(m_3 - m_4)}{m_3} + \frac{m_5 - m_6}{m_5}}{2} \times 100, \textit{ in per cent} \qquad (1.1.4.4.2)$$

.3 The transportable moisture limit of the material is 90% of the FMP.

Peat Moss

For all Peat Moss, determine the bulk density, using either the ASTM or CEN (20 litres) method.

Peat should be above or below 90kg/cubic metre on a dry weight basis in order to obtain the correct TML.

As indicated in 1.1.1, the following should be determined:

.1 The moisture content of a sample of cargo (MC).

.2 The flow moisture point (FMP).

.3 The transportable moisture limit (TML). The TML will be determined as follows:

.3.1 for peat with a bulk density of greater than 90kg/cubic metre on a dry weight is 85% of the FMP.

.3.2 for peat with a bulk density of 90kg/cubic metre or less on a dry weight, the TML is 90% of the FMP.

1.2 ***Penetration test procedure***

The penetration test constitutes a procedure whereby a material in a cylindrical vessel is vibrated. The flow moisture point is determined on the basis of the penetration depth of an indicator.

1.2.1 *Scope*

.1 The penetration test is generally suitable for mineral concentrates, similar materials, and coals up to a top size of 25 mm.

.2 In this procedure, the sample, in a cylindrical vessel, is subjected to vertical vibration of 2*g rms* $\pm$ 10% (*g* = gravity acceleration) for 6 minutes. When the penetration depth of a bit put on the surface exceeds 50 mm, it is judged that the sample contains a moisture greater than the flow moisture point.

.3 This procedure consists of a preliminary test to get an approximate value of the flow moisture point and a main test to determine the accurate flow moisture point. When the approximate value of the flow moisture point is known, the preliminary test can be omitted.

.4 The room where the samples are tested should be prepared as mentioned in 1.1.3.

1.2.2 *Apparatus (see figure 1.2.2)*

.1 The test apparatus consists of:

.1 a vibrating table;

.2 cylindrical vessels;

.3 indicators (penetration bits and a holder);

.4 a tamper (see 1.1.2.4); and

.5 ancillary equipment (see 1.1.2.5 to .8).

.2 The vibrator (see figure 1.2.2.2), with a table on which a cylindrical vessel can be clamped, should be capable of exciting a mass of 30 kg at a frequency of either 50 Hz or 60 Hz with an acceleration of 3*g* rms or more, and it can be controlled to adjust the acceleration level.

.3 Dimensions of cylindrical vessels (see figures 1.2.2.3-1 and 1.2.2.3-2) are as follows:

Cylinder size	Inner diameter	Depth	Wall thickness
small	146 mm	202 mm	9.6 mm or more
large	194 mm	252 mm	10.3 mm or more

The vessels should be made of reasonably rigid, non-magnetic, impermeable and lightweight material such as acrylics or vinyl chloride.

The small cylindrical vessel is selected for the materials having a maximum particle size of 10 mm or less. The large cylindrical vessel is for those having a maximum particle size of 25 mm or less.

.4 Penetration bits (see figure 1.2.2.4) are made of brass. The mass of the bit for coal should be adjusted to 88 g (5 kPa), and that for concentrates to 177 g (10 kPa). When the sample contains coarse particles, it is recommended that two bits of the same pressure are put on the surface to avoid misjudgment.

.5 A holder (see figure 1.2.2.5) should be made to guide the rod of a bit with minimum friction to the centre of a cylindrical vessel. When two bits are used, they should be positioned in accordance with figure 1.2.2.

.6 A cylindrical vessel and penetration indicators should be selected in accordance with the nature and condition of the test sample, viz. size of particles and bulk density.

1.2.3 *Procedure*

1.2.3.1 Preparation of the test sample and the vibrating table:

.1 The quantity of the sample required is approximately six times or more the capacity of the selected cylindrical vessel. The amount of representative test sample with which each container is filled should be as follows: approximately 1700 cm^3 for the small container, and 4700 cm^3 for the large container.

.2 Mix the sample well and divide into three approximately equal subsamples, namely (A), (B) and (C). The subsample (A) should be immediately weighed and placed in the drying oven to determine the moisture content of the sample "as received".

The subsamples (B) and (C) are used for the preliminary test and the main test, respectively.

.3 The vibration level of the vibrating table should be calibrated, using an acceleration meter, prior to carrying out testing. The acceleration of the table should be adjusted to 2*g* rms $\pm$ 10% with a container filled with a sample mounted on the table.

1.2.3.2 Preliminary flow moisture test

This test is intended to measure quickly the approximate flow moisture point, using subsample (B). Water is added in increments after every penetration test. When a flow state has been reached, the moisture content of the sample just above the flow state is measured. The moisture content of the sample just below the flow state can be calculated by deducting the increment of water last added from the gross mass of the sample.

.1 Fill the appropriate cylindrical vessel with subsample (B) in four distinct stages and tamp after the addition of each layer using a specified tamper. Tamp to a pressure denoted in 1.1.4.1 for mineral concentrates or to 40 kPa for coals, and apply the pressure evenly over the whole surface area of the material until a uniformly flat surface is obtained.

.2 Place the penetration bit on the surface of the material through the holder.

.3 Operate the vibrator at a frequency of 50 Hz or 60 Hz with an acceleration of 2*g* rms $\pm$ 10% for 6 minutes. If necessary, the acceleration level should be checked by referring to the output of the acceleration meter attached to the vibrating table.

.4 After 6 minutes of vibration, read the depth of penetration.

.5 When the depth of penetration is less than 50 mm, it is judged that liquefaction did not take place. Then:

.1 Remove the material from the cylindrical vessel and replace in the mixing bowl with the remainder of the sample.

.2 Mix well and weigh the contents of the mixing bowl.

.3 Sprinkle an increment of water of not more than 1% of the mass of the material in the bowl and mix well.

.4 Repeat the procedure described in 1.2.3.2.1 to 1.2.3.2.5.

.6 When the depth of penetration is greater than 50 mm, it is judged that liquefaction took place. Then:

.1 Remove the material from the cylindrical vessel and replace in the mixing bowl.

.2 Measure the moisture content in accordance with the procedure described in 1.1.4.4.

.3 Calculate the moisture content of the sample just below the flow moisture point on the basis of the amount of water added.

.7 If the penetration depth in the first attempt exceeds 50 mm, i.e. the sample as received liquefied, mix subsamples (B) and (C) and dry at room temperature to reduce the moisture. Then, divide the material into two subsamples (B) and (C), and repeat the preliminary test.

1.2.3.3 The main flow moisture test

.1 On the basis of the preliminary test, the main test should be carried out to determine the flow moisture point more accurately.

.2 Adjust the moisture content of the subsample (C) to the last value, which did not cause flow in the preliminary flow moisture test.

.3 The first test of the main flow moisture test is carried out on this adjusted sample in the same manner as described in 1.2.3.2. In this case, however, the addition of water in increments should not be more than 0.5% of the mass of the test material.

.4 When the approximate value of the flow moisture point is known in advance, the moisture content of the subsample (C) is adjusted to approximately 90% of this value.

.5 When a flow state has been reached, the flow moisture point is determined as described in 1.1.4.3.

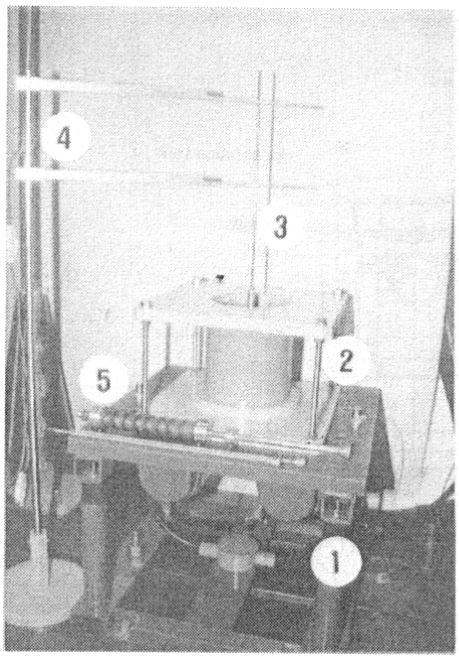

① Vibration table

② Cylindrical vessel (150 mm diameter)

③ Penetration bit (10 kPa)

④ Bit holder

⑤ Tamper

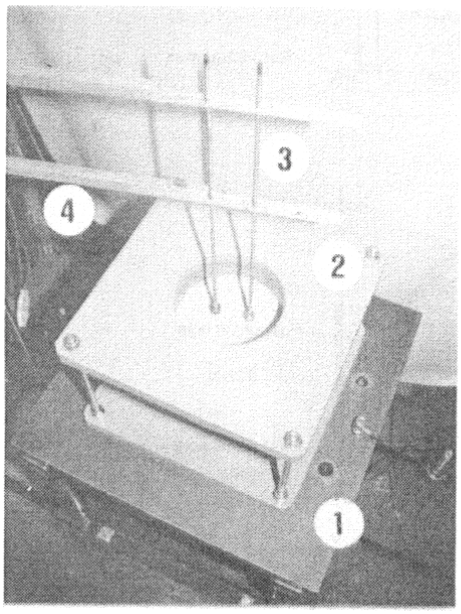

① Vibration table

② Cylindrical vessel (150 mm diameter)

③ Penetration bit (5 kPa)

④ Bit holder

97580

Figure 1.2.2 ***Test apparatus***

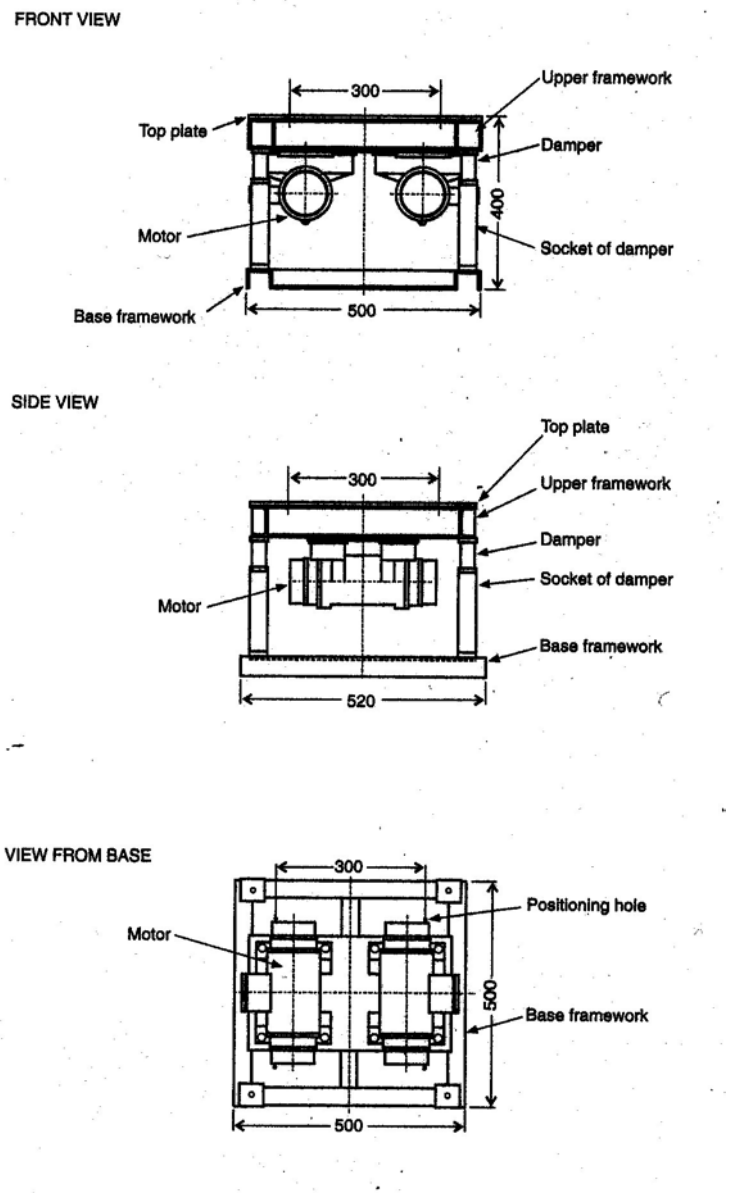

Figure 1.2.2.2 ***Vibration table***

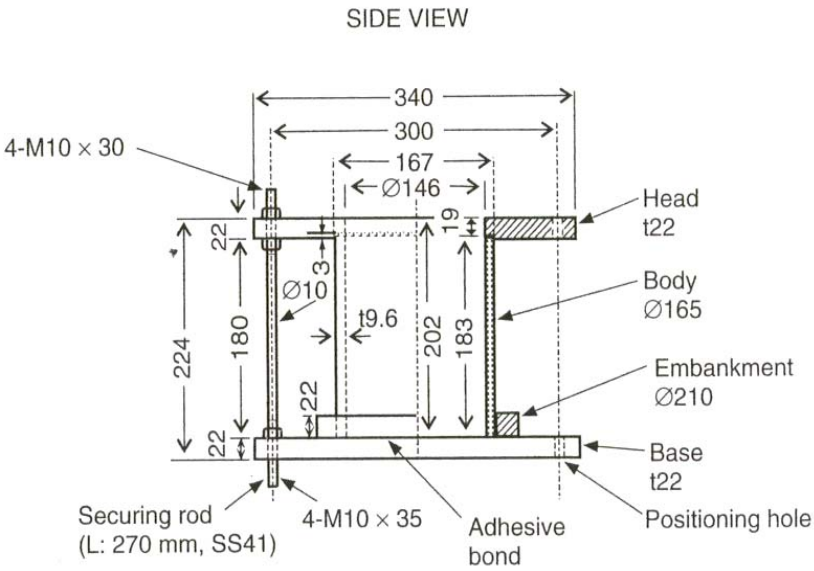

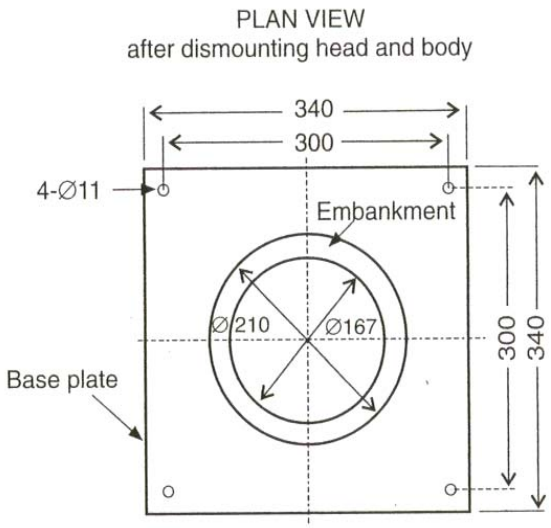

Figure 1.2.2.3-1 ***Cylindrical vessel, 150 mm diameter***

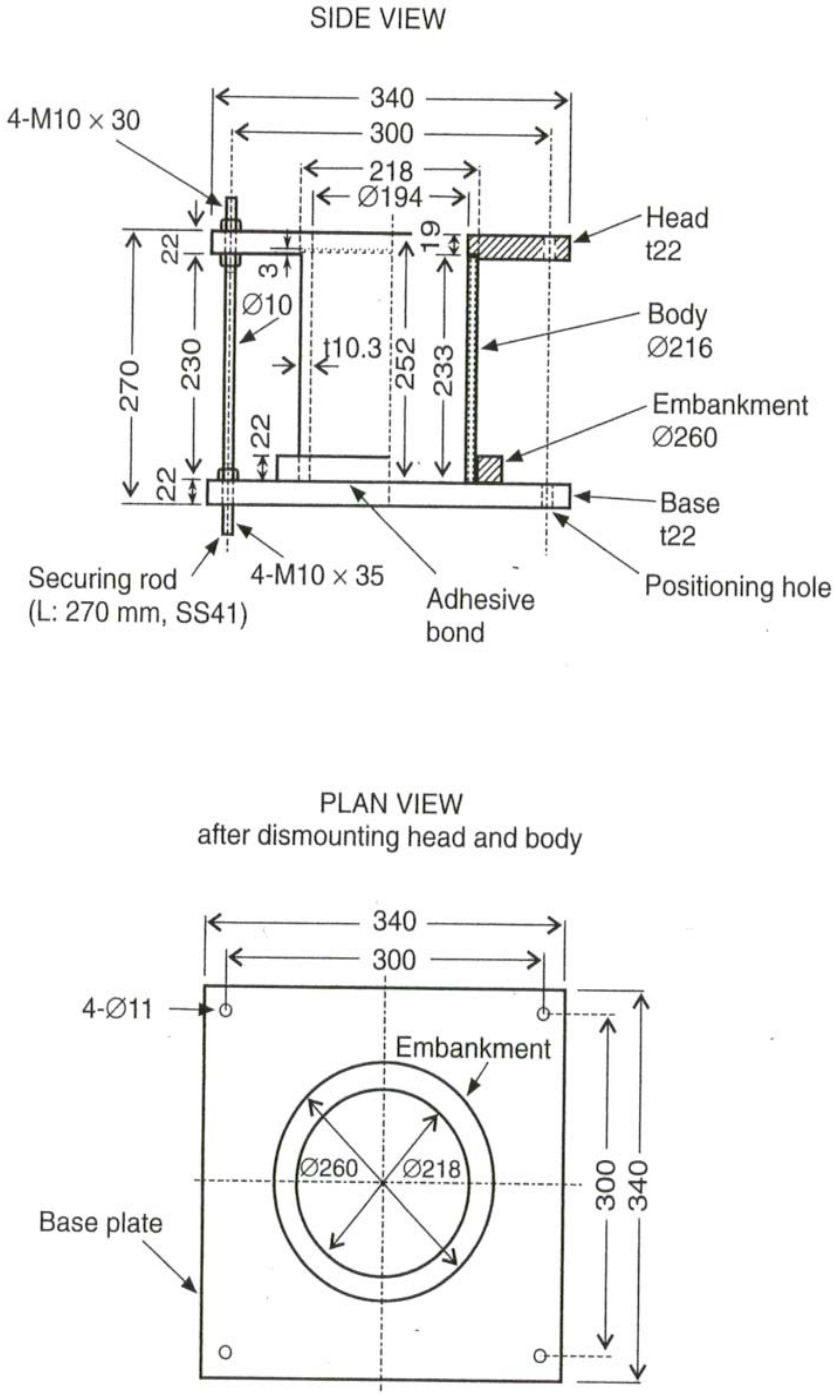

Figure 1.2.2.3-2 ***Cylindrical vessel, 200 mm diameter***

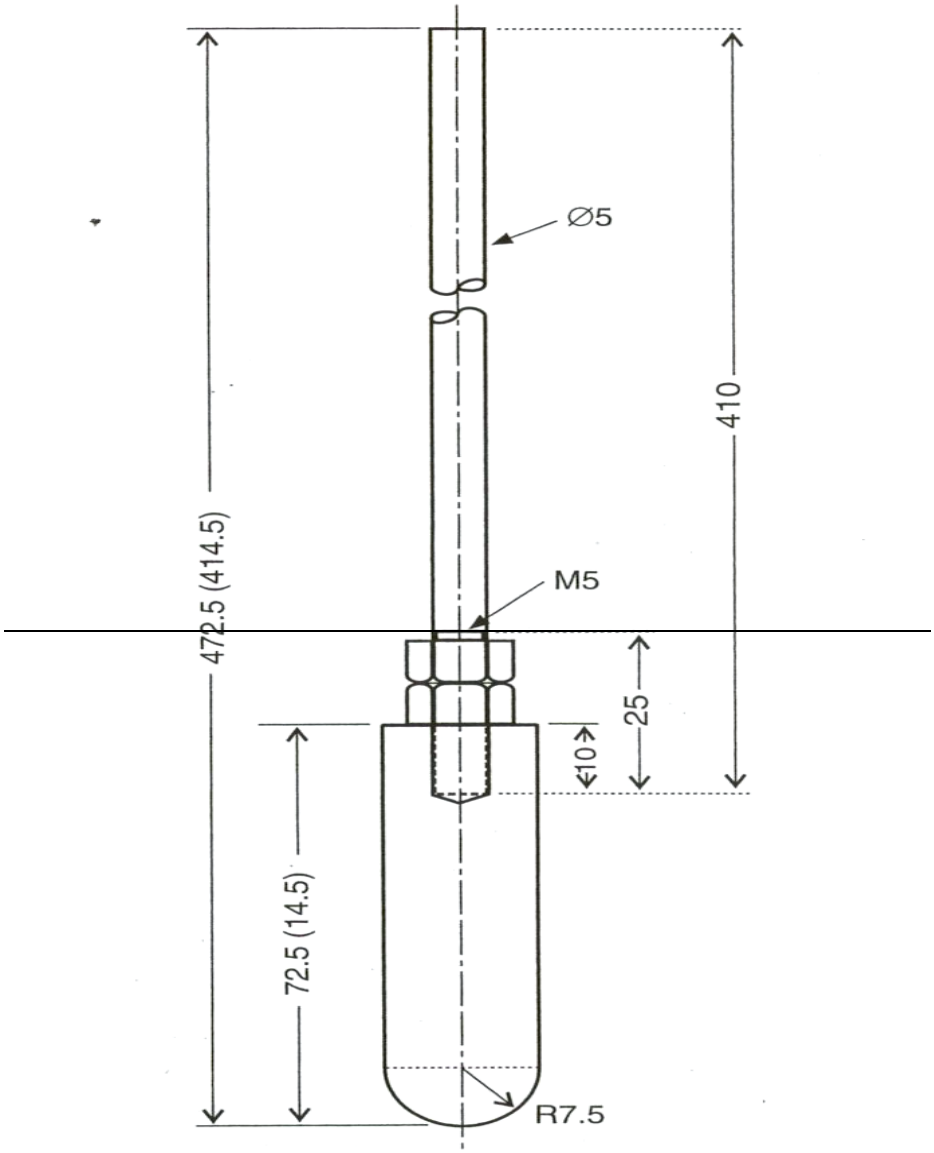

(Dimensions indicated in brackets are of the 5 kPa bit)
(unit: mm)

Figure 1.2.2.4 ***Penetration bit***

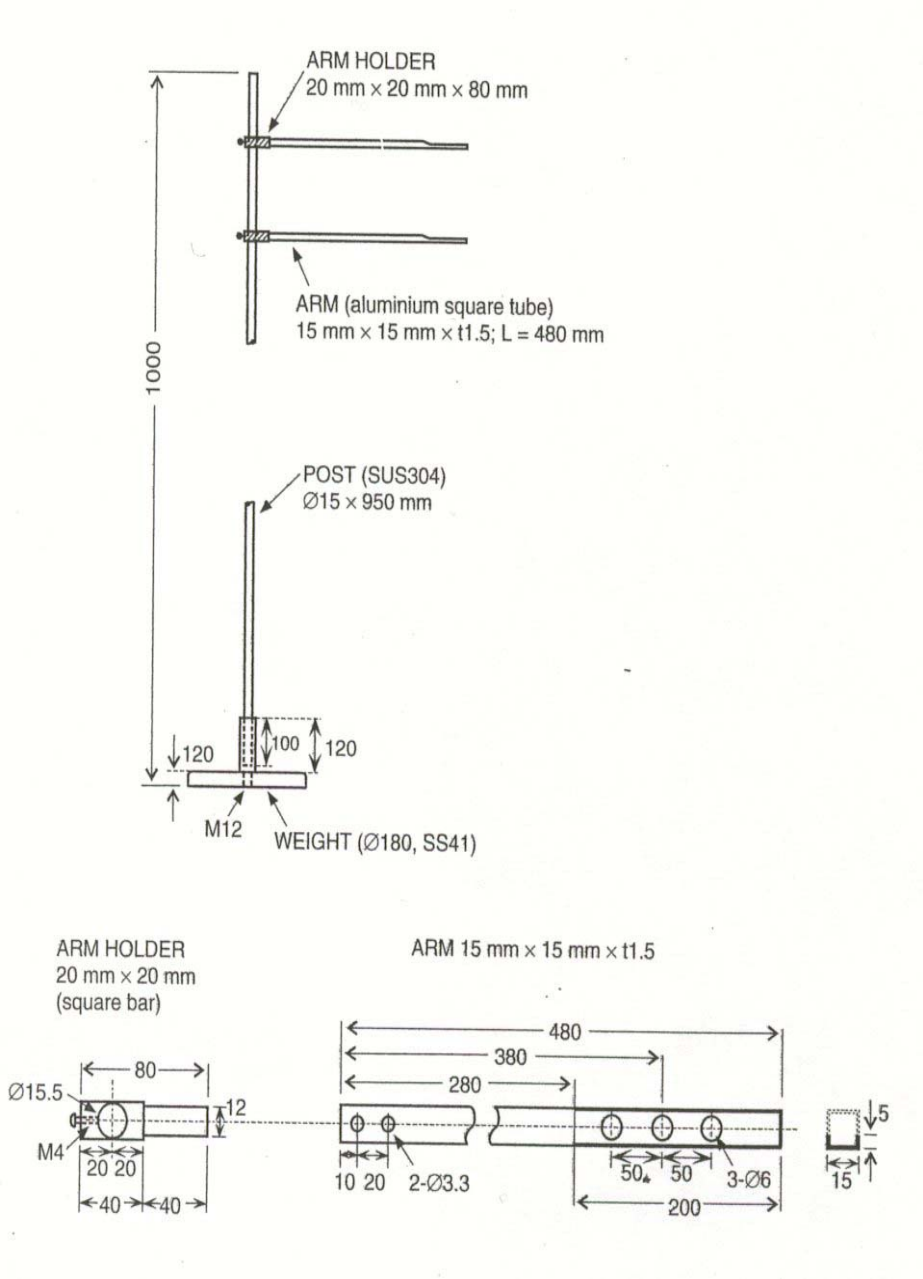

Figure 1.2.2.5 ***Bit holder***

1.3 *Proctor/Fagerberg test procedure*

1.3.1 *Scope*

.1 Test method for both fine and relatively coarse-grained ore concentrates or similar materials up to a top size of 5 mm. This method should not be used for coal or other porous materials.

.2 Before the Proctor/Fagerberg test is applied to coarser materials with a top size greater than 5 mm, an extensive investigation for adoption and improvement is required.

.3 The transportable moisture limit (TML) of a cargo is taken as equal to the critical moisture content at 70% degree of saturation according to the Proctor/Fagerberg method test.

1.3.2 *Proctor/Fagerberg test equipment*

.1 The Proctor apparatus (see figure 1.3.2) consists of a cylindrical iron mould with a removable extension piece (the compaction cylinder) and a compaction tool guided by a pipe open at its lower end (the compaction hammer).

.2 Scales and weights (see 3.2) and suitable sample containers.

.3 A drying oven with a controlled temperature interval from 100° C to maximum 105° C. This oven should be without air circulation.

.4 A suitable mixer. Care should be taken to ensure that the use of the mixer does not reduce the particle size or consistency of the test material.

.5 Equipment to determine the density of the solid material, for example a pycnometer.

1.3.3.3 Temperature and humidity (see 1.1.3)

1.3.4 *Procedure*

.1 *Establishment of a complete compaction curve.* A representative sample according to a relevant standard (see section 4.7, page 20) of the test material is dried at a temperature of approximately 100° C. The total quantity of the test material should be at least three times as big as required for the complete test sequence. Compaction tests are executed for five to ten different moisture contents (five to ten separate tests). The samples are adjusted in order that dry to almost saturated (plastic) samples are obtained. The required quantity per compaction test is about 2000 cm^3.

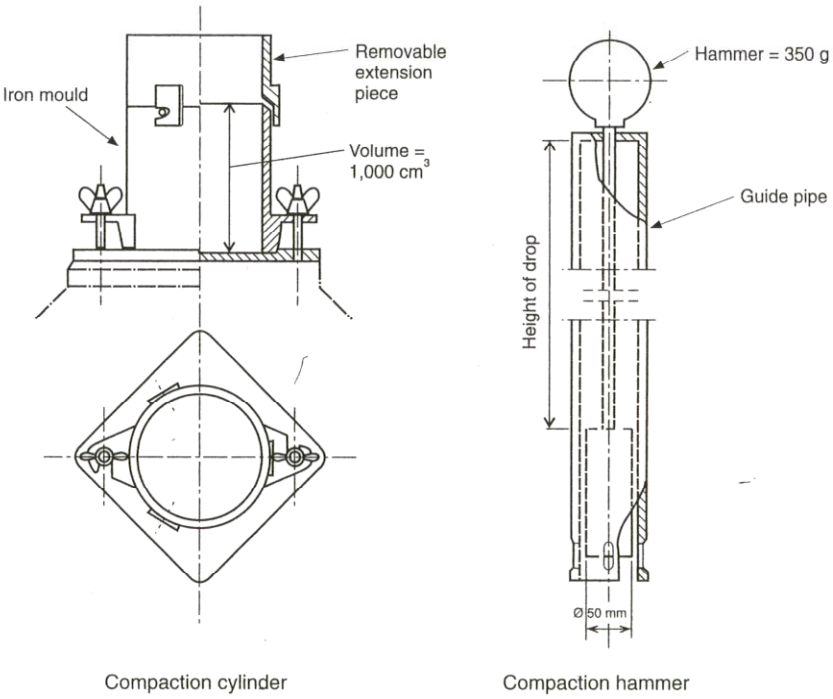

Figure 1.3.2 ***Proctor apparatus***

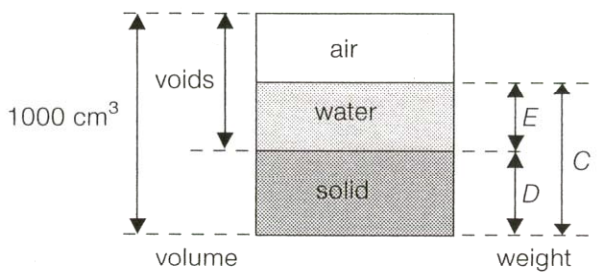

Figure 1.3.4.2

At each compaction test a suitable amount of water is added to the sample of the dried test material and mixed thoroughly for 5 minutes. Approximately one fifth of the mixed sample is filled into the mould and levelled and then the increment is tamped uniformly over the surface of the increment. Tamping is executed by dropping the hammer 25 times through the guide pipe, 0.2 m each time. The performance is repeated for all five layers. When the last layer has been tamped the extension piece is removed and the sample is levelled off along the brim of the mould. When the weight of the cylinder with the tamped sample has been determined, the cylinder is emptied, the sample is dried and the weight is determined.

The test then is repeated for the other samples with different moisture contents.

.2 *Definitions and data for calculations (see figure 1.3.4.2)*

- empty cylinder, mass in grams: A
- cylinder with tamped sample, mass in grams: B
- wet sample, mass in grams: C

$$C = B - A$$

- dry sample, mass in grams: D
- water, mass in grams (equivalent to volume in cm^3): E

$$E = C - D$$

Volume of cylinder: 1000 cm^3

.3 *Calculation of main characteristics*

- density of solid material, g/cm^3 (t/m^3): d
- dry bulk density, g/cm^3 (t/m^3): γ

$$\gamma = \frac{D}{1000}$$

- net water content, volume %: e_v

$$e_v = \frac{E}{D} \text{ x } 100 \text{ x } d$$

- void ratio: e (volume of voids divided by volume of solids)

$$e = \frac{1000 - D}{D} = \frac{d}{\lambda} = - 1$$

- degree of saturation, percentage by volume: S

$$S = \frac{e_v}{e}$$

- gross water content, percentage by mass: W^1

$$W^1 = \frac{E}{C} \times 100$$

- net water content, percentage by mass: W

$$W = \frac{E}{D} \times 100$$

.4 *Presentation of the compaction tests*

For each compaction test the calculated void ratio (e) value is plotted as the ordinate in a diagram with net water content (e_v) and degree of saturation (S) as the respective abscissa parameters.

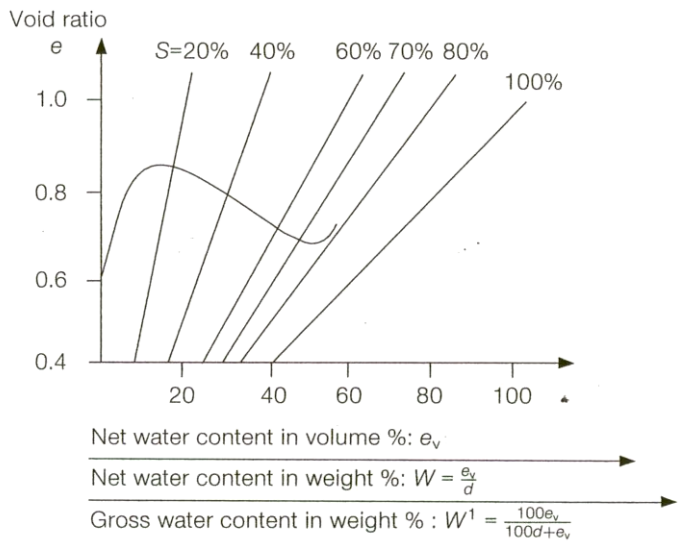

Figure 1.3.4.5

.5 *Compaction curve*

The test sequence results in a specific compaction curve (see figure 1.3.4.5).

The critical moisture content is indicated by the intersection of the compaction curve and the line S = 70% degree of saturation. The transportable moisture limit (TML) is the critical moisture content.

2 Test procedures to determine the angle of repose and associated apparatus

2.1 *Determination of angle of repose of fine-grained materials (size less than 10 mm): "tilting box test". For use in laboratory or port of loading*

2.1.1 *Scope*

The test provides for the determination of the angle of repose of fine-grained non-cohesive materials (size less than 10 mm). The results so obtained may be used when interpreting sections 5 and 6 of this Code for the materials in question.

2.1.2 *Definition*

The angle of repose obtained by this test is the angle formed between the horizontal and the top of the testbox when the material in the box just begins to slide in bulk.

2.1.3 *Principle of test*

When measuring the angle of repose by this method, the material surface should initially be level and parallel to the testbox base. The box is tilted without vibration and tilted without vibration and tilting is stopped when the product just begins to slide in bulk.

2.1.4 *Apparatus (see figure 2.1.4)*

Apparatus is as follows:

.1 A framework, on top of which is attached an open box. Attachment of the box to the frame is by means of a shaft passing through bearings affixed to both the frame and the end of the box, enabling the box to be subjected to a controlled tilt.

.2 The dimensions of the box are 600 mm long, 400 mm wide and 200 mm high.

.3 To prevent sliding of the material along the bottom of the box during tilting, a tightly fitting grating (openings 30 mm x 30 mm x 25 mm) is placed on the bottom of the box before filling.

.4 Tilting of the box is effected by a hydraulic cylinder fitted between the frame and the bottom of the box. Other means may be used to obtain the required tilting but in all cases vibration must be eliminated.

.5 To pressurize the hydraulic cylinder, a hydropneumatic accumulator may be used, pressurized by air or gas at a pressure of about 5 kp/cm^2.

.6 The rate of tilting should be approximately 0.3^o/s.

.7 Range of tilt should be at least 50°.

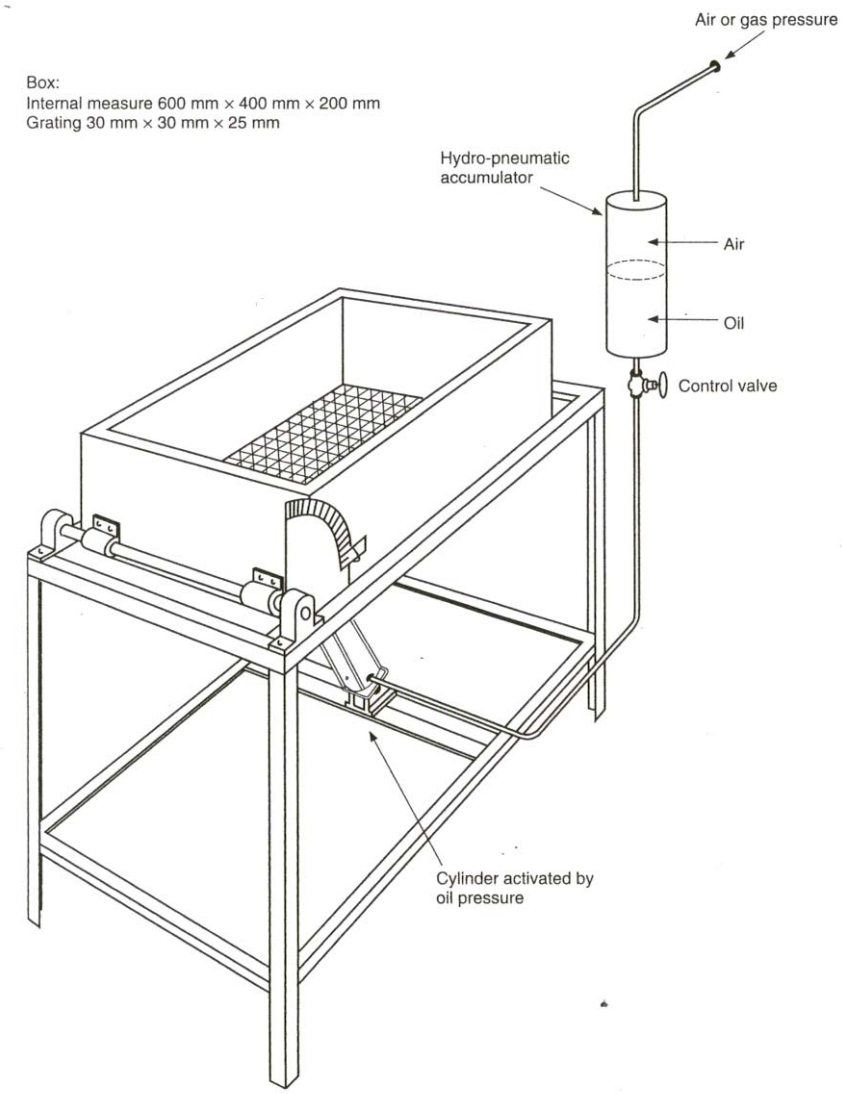

Figure 2.1.4 ***Basic sketch of tilting box***

.8 A protractor is fitted to the end of the shaft. One lever of the protractor is fitted so that it may be screw-adjusted to the horizontal.

.9 The protractor should measure the angle of the top of the box to the horizontal to within an accuracy of 0.5^{o}.

.10 A spirit level or some other levelling device should be available to zero the protractor.

2.1.5 *Procedure*

The box is filled with the material to be tested by pouring it slowly and carefully from the lowest practical height into the box in order to obtain uniformity of loading.

The excess material is scraped off with the aid of a straight edge, inclined at about 45° towards the direction of scraping.

The tilting system is then activated and stopped when the material just begins to slide in bulk.

The angle of the top of the box to the horizontal is measured by the protractor and recorded.

2.1.6 *Evaluation*

The angle of repose is calculated as the mean of three measurements and is reported to within half a degree.

Notes: Preferably the test should be carried out with three independent samples.

Care should be taken to ensure that the shaft is adjusted to be horizontal before testing.

2.2 ***Alternative or shipboard test method to be used for the determination of the angle of repose when the tilting box is not available***

2.2.1 *Definition*

According to this method the angle of repose is the angle between the cone slope and the horizontal measured at half height.

2.2.2 *Principle of test*

To determine the angle of repose, a quantity of the material to be tested is poured very carefully out of a flask onto a sheet of rough-textured paper, in such a way that a symmetrical cone is formed.

2.2.3 *Equipment*

The necessary equipment to carry out this test is as follows:

- a horizontal table free from vibrations;
- a sheet of rough-textured paper onto which the material should be poured;
- a protractor; and
- a 3-litre conical flask.

2.2.4 *Procedure*

Put the sheet of paper on the table. Split 10 *l* of the material to be tested into three subsamples and test each in the following way:

Pour two thirds of the subsample (i.e. 2 *l*) onto the sheet, producing a starting cone. The remainder of this subsample is then poured very carefully from a height of a few millimetres on top of the cone. Care should be taken that the cone will be built up symmetrically. This may be achieved by revolving the flask slowly close around the top of the cone when pouring.

When measuring, care should be taken that the protractor does not touch the cone, otherwise this may result in sliding of the material and spoil the test.

The angle has to be measured at four places around the cone, about 90 degrees apart.

This test should be repeated on the other two subsamples.

2.2.5 *Calculations*

The angle of repose is taken as the mean of the 12 measurements and is reported to half a degree. This figure can be converted to the tilting box value as follows:

$$a_t = a_s + 3^o \qquad (2.2.5)$$

Where a_t = angle of repose according to the tilting box text

a_s = angle of repose according to the survey test

3 Standards used in test procedures

3.1 *Standard flow table and frame**

3.1.1 *Flow table and frame*

3.1.1.1 The flow table apparatus shall be constructed in accordance with figure 3. The apparatus shall consist of an integrally cast rigid iron frame and a circular rigid table top, 10 inches ± 0.1 inch (254 mm ± 2.5 mm) in diameter, with a shaft attached perpendicular to the table top by means of a screw thread. The table top, to which the shaft with its integral contact shoulder is attached, shall be mounted on a frame in such a manner that it can be raised and dropped vertically through the specified height, with a tolerance in height of ± 0.005 inches (0.13 mm) for new tables and ± 0.015 inches (0.39 mm) for tables in use, by means of a rotated cam. The table top shall have a fine-machined plane surface, free of blowholes and surface defects, and shall be scribed as shown in figure 3. The table top shall be of cast brass or bronze having a Rockwell hardness number not less than HRB 25 with an edge thickness of 0.3 inches (8 mm), and shall have six integral radial stiffening ribs. The table top and attached shaft shall weigh 9 lb ± 0.1 lb (4 kg ± 0.05 kg) and the weight shall be symmetrical around the centre of the shaft.

* Source: "Standard Specification for Flow Table for Use in Tests of Hydraulic Cement", Designation C230-68. Reprinted by permission of American Society for Testing and Materials (ASTM), 1916 Race Street, Philadelphia, Penn., USA, copyright ASTM 1977.

3.1.1.2 The cam and vertical shaft shall be of medium-carbon machinery steel, hardened where indicated in figure 3. The shaft shall be straight and the difference between the diameter of the shaft and the diameter of the bore of the frame shall be not less than 0.002 inches (0.05) and not more than 0.003 inches (0.08 mm) for new tables and shall be maintained at from 0.002 inches to 0.010 inches (0.26 mm) for tables in use. The end of the shaft shall not fall upon the cam at the end of the drop, but shall make contact with the cam not less than 120° from the point of drop. The face of the cam shall be a smooth spiralled curve of uniformly increasing radius from ½ inch to 1¼ inches (13 mm to 32 mm) in 360° and there shall be no appreciable jar as the shaft comes into contact with the cam. The cam shall be so located and the contact faces of the cam and shaft shall be such that the table does not rotate more than one revolution in 25 drops. The surfaces of the frame and of the table which come into contact at the end of the drop shall be maintained smooth, plane, and horizontal and parallel with the upper surface of the table and shall make continuous contact over a full 360°.

3.1.1.3 The supporting frame of the flow table shall be integrally cast of fine-grained, high-grade cast iron. The frame casting shall have three integral stiffening ribs extending the full height of the frame and located 120° apart. The top of the frame shall be chilled to a depth of approximately ¼ inch (6.4 mm) and the face shall be ground and lapped square with the bore to give 360° contact with the shaft shoulder. The underside of the base of the frame shall be ground to secure a complete contact with the steel plate beneath.

3.1.1.4 The flow table may be driven by a motor,[1] connected to the camshaft through an enclosed worm gear speed reducer and flexible coupling. The speed of the camshaft shall be approximately 100 rpm. The motor drive mechanism shall not be fastened or mounted on the table base plate or frame.

The performance of a flow table shall be considered satisfactory if, in calibration tests, the table gives a flow value that does not differ by more than 5 percentage points from flow values obtained with a suitable calibration material.[2]

3.1.2 *Flow table mounting*

3.1.2.1 The flow table frame shall be tightly bolted to a cast iron or steel plate at least 1 inch (25 mm) thick and 10 inches (250 mm) square. The top surface of this plate shall be machined to a smooth plane surface. The plate shall be anchored to the top of a concrete pedestal by four ½ inch (13 mm) bolts that pass through the plate and are embedded at least 6 inches (150 mm) in the pedestal. The pedestal shall be cast inverted on the base plate. A positive contact between the base plate and the pedestal shall be obtained at all points. No nuts or other such levelling devices shall be used between the plate and the pedestal. Levelling shall be effected by suitable means under the base of the pedestal.

---

1 A 1/20 hp (40 W) motor has been found adequate. The flow table may be driven by a hand-operated camshaft as shown in the illustration.

2 Such a material may be obtained from the Cement and Concrete Reference Laboratory at the National Bureau of Standards, Washington, D.C. 20234, USA.

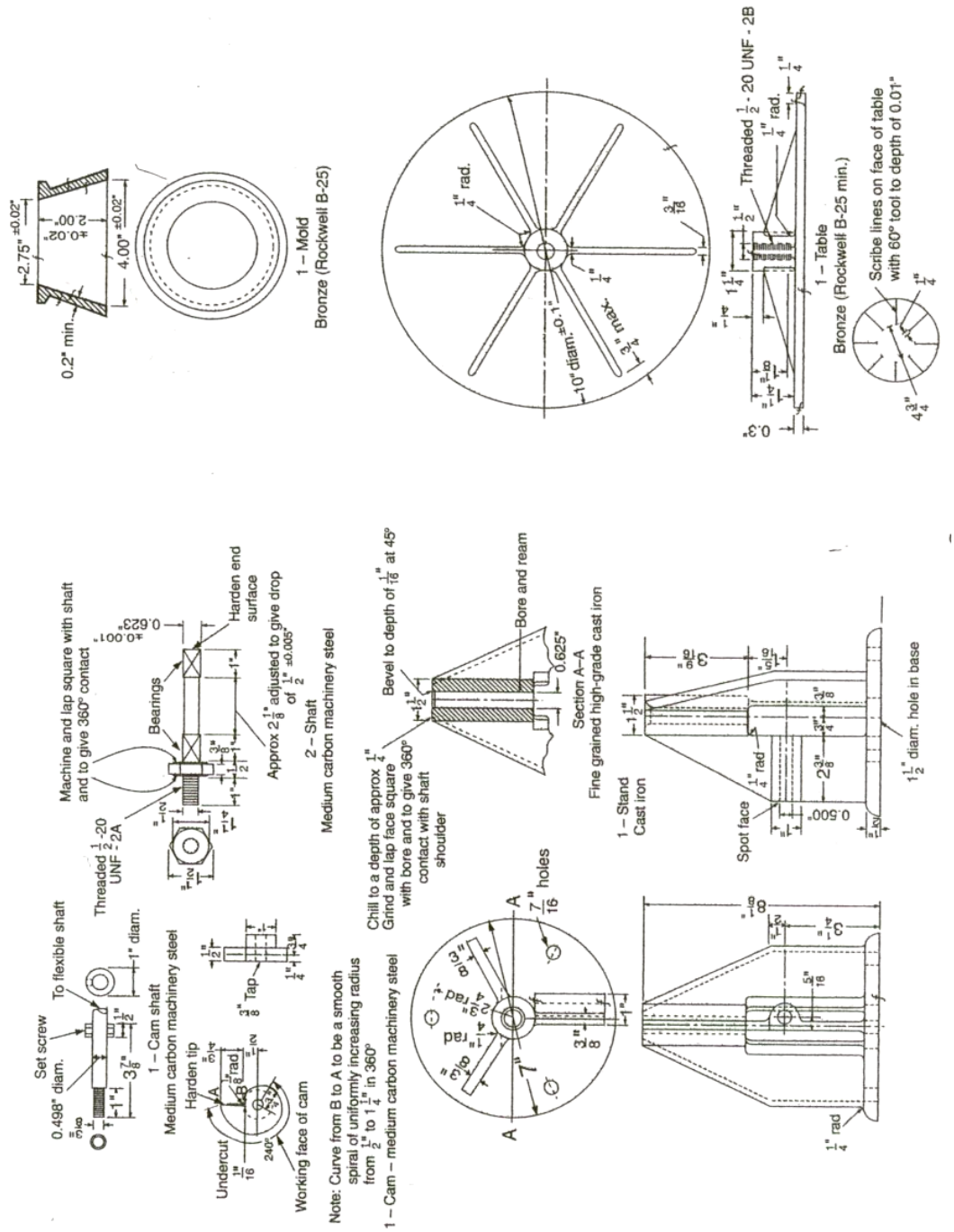
1 – Mold
Bronze (Rockwell B-25)
1 – Table
Bronze (Rockwell B-25 min.)
Threaded 1/2 - 20 UNF - 2B
Scribe lines on face of table with 60° tool to depth of 0.01"
1 – Cam shaft
Medium carbon machinery steel
2 – Shaft
Medium carbon machinery steel
Machine and lap square with shaft and to give 360° contact
Bearings
Harden end surface
Threaded 1/2-20 UNF-2A
Approx 2 1/8" adjusted to give drop of 1/2" ±0.005"
Set screw
To flexible shaft
0.498" diam.
Harden tip
Undercut
Working face of cam
Note: Curve from B to A to be a smooth spiral of uniformly increasing radius from 1/2" to 1 1/4" in 360°
1 – Cam – medium carbon machinery steel
Chill to a depth of approx 1/4" Grind and lap face square with bore and to give 360° contact with shaft shoulder
Bevel to depth of 1/16" at 45°
Bore and ream
Section A–A
Fine grained high-grade cast iron
1 – Stand
Cast iron
Spot face
1 1/2" diam. hole in base
7/16" holes

Figure 3

3.1.2.2 The pedestal shall be 10 inches to 11 inches (250 mm to 275 mm) square at the top, and 15 inches to 16 inches (375 mm to 400 mm) square at the bottom, 25 inches to 30 inches (625 mm to 750 mm) in height, and shall be of monolithic construction, cast from concrete weighing at least 140 lb/ft^3 (2240 kg/m^3). A stable gasket cork pad, ½ inch (13 mm) thick and approximately 4 inches (102 mm) square, shall be inserted under each corner of the pedestal. The flow table shall be checked frequently for levelness of the table top, stability of the pedestal, and tightness of the bolts and nuts in the table base and the pedestal plate. (A torque of 20 lb ft (27 Nm) is recommended when tightening those fastenings.)

3.1.2.3 The table top, after the frame has been mounted on the pedestal, shall be level along two diameters at right angles to each other, in both the raised and lowered positions.

3.1.3 *Flow table lubrication*

3.1.3.1 The vertical shaft of the table shall be kept clean and shall be lightly lubricated with a light oil (SAE-10). Oil shall not be present between the contact faces of the table top and the supporting frame. Oil on the cam face will lessen wear and promote smoothness of operation. The table should be raised and permitted to drop a dozen or more times just prior to use if it has not been operated for some time.

3.1.4 *Mould*

3.1.4.1 The mould for casting the flow specimen shall be of cast bronze or brass, constructed as shown in figure 3. The Rockwell hardness number of the metal shall be not less than HRB 25. The diameter of the top opening shall be 2.75 inches ± 0.02 inches (69.8 mm ± 0.5 mm) for new moulds and 2.75 inches + 0.05 inches (+ 1.3 mm) and – 0.02 inches for moulds in use. The surfaces of the base and top shall be parallel and at right angles to the vertical axis of the cone. The mould shall have a minimum wall thickness of 0.2 inches (5 mm). The outside of the top edge of the mould shall be shaped so as to provide an integral collar for convenient lifting of the mould. All surfaces shall be machined to a smooth finish. A circular shield approximately 10 inches (254 mm) in diameter, with a centre opening approximately 4 inches (102 mm) in diameter, made of non-absorbing material not attacked by the cement, shall be used with the flow mould to prevent mortar from spilling on the table top.

3.2 *Scales and weights*[*]

3.2.1 *Scales*

3.2.1.1 The scales used shall conform to the following requirements. On scales in use, the permissible variation at a load of 2000 g shall be ± 2.0 g. The permissible variation on new scales shall be one half of this value. The sensibility reciprocal[1] shall be not greater than twice the permissible variation.

3.2.2 *Weights*

3.2.2.1 The permissible variations on weights shall be as prescribed in the table below. The permissible variations on news weights shall be one half of the values in the table below.

PERMISSIBLE VARIATIONS ON WEIGHTS

Weight (g)	Permissible variations on weights in use, plus or minus (g)
1000	0.50
900	0.45
750	0.40
500	0.35
300	0.30
250	0.25
200	0.20
100	0.15
50	0.10
20	0.05
10	0.04
5	0.03
2	0.02
1	0.01

* Source, "Standard Method of Test for Compressive Strength of Hydraulic Cement Mortars", Designation C109-3. Reprinted by permission of American Society for Testing and Materials (ASTM), 1916 Race Street, Philadelphia, Penn., USA, copyright ASTM 1977.

[1] Generally defined, the sensibility reciprocal is the change in load required to change the position of rest of the indicating element or elements of a non-automatic indicating scale a definite amount at any load. For a more complete definition, see "Specifications, Tolerances, and Regulations for Commercial Weighing and Measuring Devices", *Handbook H44,* National Bureau of Standards, Washington, D.C., USA, September 1949, pp. 92 and 93.

4 Trough test for determination of the self-sustaining exothermic decomposition of fertilizers containing nitrates*

4.1 *Definition*

A fertilizer capable of self-sustaining decomposition is defined as one in which decomposition initiated in a localized area will spread throughout the mass. The tendency of a fertilizer offered for transport to undergo this type of decomposition can be determined by means of the trough test. In this test localized decomposition is initiated in a bed of the fertilizer to be contained in a horizontally mounted trough. The amount of propagation, after removal of the initiating heat source, of decomposition through the mass is measured.

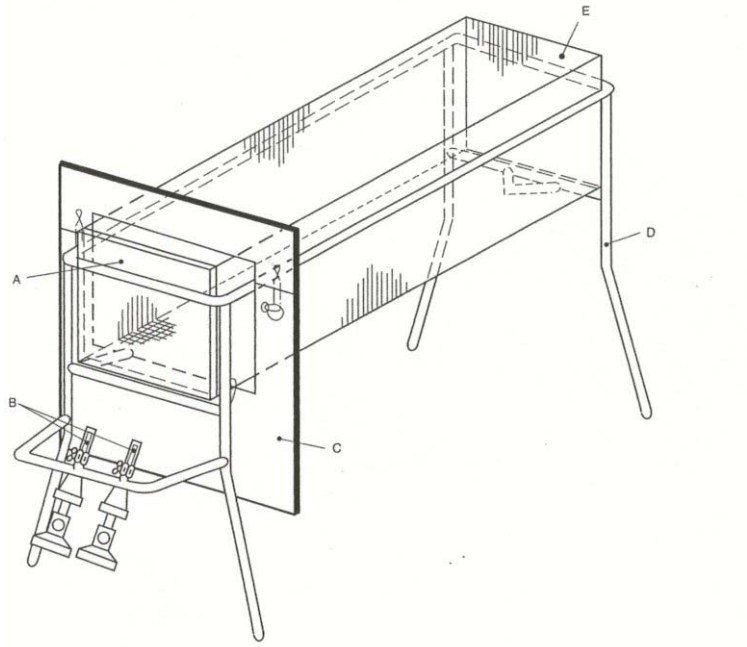

A	Steel plate (150 x 150 mm and 1 to 3 mm thick)
B	Gas burners (e.g. Teclu or Bunsen)
C	Heat shield (2 mm thick)
D	Stand (e.g. made from 15 mm wide, 2 mm thick steel bar)
E	Gauze trough (150 x 150 x 500 mm)

Figure 4-1 ***Gauze trough with support and burners***

* Source: Section 38 of the United Nations Recommendation on the Transport of Dangerous Goods, Manual of Tests and Criteria.

4.2 *Apparatus and materials*

The apparatus (figure 4-1) consists of a trough of internal dimensions 150 mm x 150 mm x 500 mm, open at the top. The trough is constructed of square-meshed gauze (preferably stainless steel) with a mesh width of about 1.5 mm and a wire thickness of 1.0 mm supported on a frame made from, for example, 15 mm wide, 2 mm thick steel bars. The gauze at each end of the trough may be replaced by 1.5 mm thick, 150 mm x 150 mm stainless steel plates. The trough should be rested on a suitable support. Fertilizers with a particle size distribution such that a significant amount falls through the mesh of the trough should be tested in a trough of smaller mesh gauze, or alternatively in a trough lined with gauze of a smaller mesh. During initiation sufficient heat should be provided and maintained to establish a uniform decomposition front. Two alternative heating methods are recommended, viz:

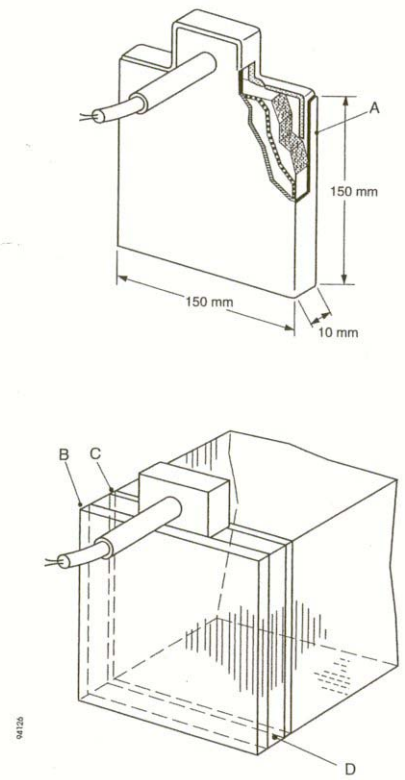

A	Aluminium or stainless steel sheathing (thickness 3 mm)
B	Insulating plate (thickness 5 mm)
C	Aluminium foil or stainless steel plate (thickness 3 mm)
D	Position of heating device in trough

Figure 4-2 ***Electrical heating device (capacity 250 W)***

4.2.1 *Electrical heating*

An electrical heating element (capacity 250 W) enclosed in a stainless steel box is placed inside and at one end of the trough (figure 4-2). The dimensions of the stainless steel box are 145 mm x 145 mm x 10 mm, and the wall thickness is 3 mm. The side of the box which is not in contact with the fertilizer should be protected with a heat shield (insulation plate 5 mm thick). The heating side of the box may be protected with aluminium foil or a stainless steel plate.

4.2.2 *Gas burners*

A steel plate (thickness 1 mm to 3 mm) is placed inside one end of the trough and in contact with the wire gauze (figure 4-1). The plate is heated by means of two burners which are fixed to the trough support and are capable of maintaining the plate at temperatures between 400°C and 600° C, i.e. dull red heat.

4.2.3 To prevent heat transport along the outside of the trough, a heat shield consisting of a steel plate (2 mm thick) should be installed at about 50 mm from the end of the trough where the heating takes place.

4.2.4 The life of the apparatus may be prolonged if it is constructed of stainless steel throughout. This is particularly important in the case of the gauze trough.

4.2.5 Propagation may be measured using thermocouples in the substance and recording the time at which a sudden temperature rise occurs as the reaction front reaches the thermocouple.

4.3 *Procedure*

4.3.1 The apparatus should be set up under a fume hood to remove toxic decomposition gases or in an open area where the fumes can be readily dispersed. Although there is no explosion risk, when performing the test it is advisable to have a protective shield, e.g. of suitable transparent plastics, between the observer and the apparatus.

4.3.2 The trough is filled with the fertilizer in the form to be offered for shipment and decomposition is initiated at one end, either electrically or by means of gas burners as described above. Heating should be continued until decomposition of the fertilizer is well established and propagation of the front (over approximately 30 mm to 50 mm) has been observed. In the case of products with high thermal stability, it may be necessary to continue heating for two hours. If fertilizers show a tendency to melt, the heating should be done with care, i.e. using a small flame.

4.3.3 About 20 minutes after the heating has been discontinued, the position of the decomposition front is noted. The position of the reaction front can be determined by difference in colour, e.g. brown (undecomposed fertilizer) to white (decomposed fertilizer), or by the temperature indicated by adjacent pairs of thermocouples which bracket the reaction front. The rate of propagation may be determined by observation and timing or from thermocouple records. It should be noted whether there is no propagation after heating is discontinued or whether propagation occurs throughout the substance.

4.4 *Test criteria and method of assessing results*

4.4.1 If propagation of the decomposition continues throughout the substance the fertilizer is considered capable of showing self-sustaining decomposition.

4.4.2 If propagation does not continue throughout the substance, the fertilizer is considered to be free from the hazard of self-sustaining decomposition.

5 Description of the Test of Resistance to Detonation

5.1 *Principle*

5.1.1 The test sample is confined in a steel tube and subjected to detonation shock from an explosive booster charge. Propagation of the detonation is determined from the degree of compression of lead cylinders on which the tube rests horizontally during the test.

5.2 *Sample Preparation*

5.2.1 The test must be carried out on a representative sample of cargo. Before being tested for resistance to detonation, the whole mass of the sample is to be thermally cycled five times between 25°C and 50°C ±°C) in sealed tubes. The sample shall be maintained at the extreme temperatures, measured at the centre of the sample, for at least 1 hour during each thermal cycle and at 20°C ± 3°C) after complete cycling until tested.

5.3 *Materials*

Seamless steel tube to ISO 65-1981-Heavy or equivalent.

Tube length	1000 mm
Nominal external diameter	114 mm
Nominal wall thickness	5 to 6.5 mm

Bottom plate (160 x 160 mm) of good weldable quality, thickness 5 to 6 mm to be butt-welded to one end of the tube around the entire circumference.

Initiation system and booster.

Electrical blasting cap or detonating cord with non-metallic sleeve (10 to 13 g/m).

Compressed pellet of secondary explosive, such as hexogen/wax 95/5 or tetryl, with a central recess to take the detonator.

500 ± 1 gram plastic explosive containing 83 to 86 % penthrite, formed into a cylinder in a cardboard or plastic tube. Detonation velocity 7300-7700 m/s.

Six witness cylinders of refined, cast lead for detecting detonation.

50 mm diameter x 100 mm high, refined lead of at least 99.5% purity.

5.4 *Procedure*

Test Temperature: 15 to 20°C. Figures 1 and 2 show the test arrangement.

Fill the tube about one-third of its height with the test sample and drop it 10 cm vertically five times on the floor. Improve the compression by striking the side wall with a hammer between drops. A further addition shall be made such that, after compaction or by raising and dropping the tube 20 times and a total of 20 intermittent hammer blows, the charge fills the tube to a distance of 70 mm from its orifice.

Insert the plastic explosive into the tube and press it down with a wooden die. Place the compressed pallet centrally in the recess within the plastic explosive. Close it with a wooden disc so that it remains in contact with the test sample. Lay the test tube horizontally on the 6 lead cylinders placed at 150 mm intervals (centric), with the centre of the last cylinder 75 mm from the bottom plate, on a firm, level, solid surface that is resistant to deformation or displacement. Insert the electrical blasting cap or the detonating cord.

Ensure that all necessary safety precautions are taken, connect and detonate the explosive.

Record, for each of the lead cylinders, the degree of compression expressed as a percentage of the original height of 100 mm. For oblique compression, the deformation is taken as the average of the maximum and minimum deformation.

5.5 *Results*

The test is to be carried out twice. If in each test one or more of the supporting lead cylinders are crushed by less than 5% the sample is deemed to satisfy the resistance to detonation requirements.

Figure 1: ***Booster charge***

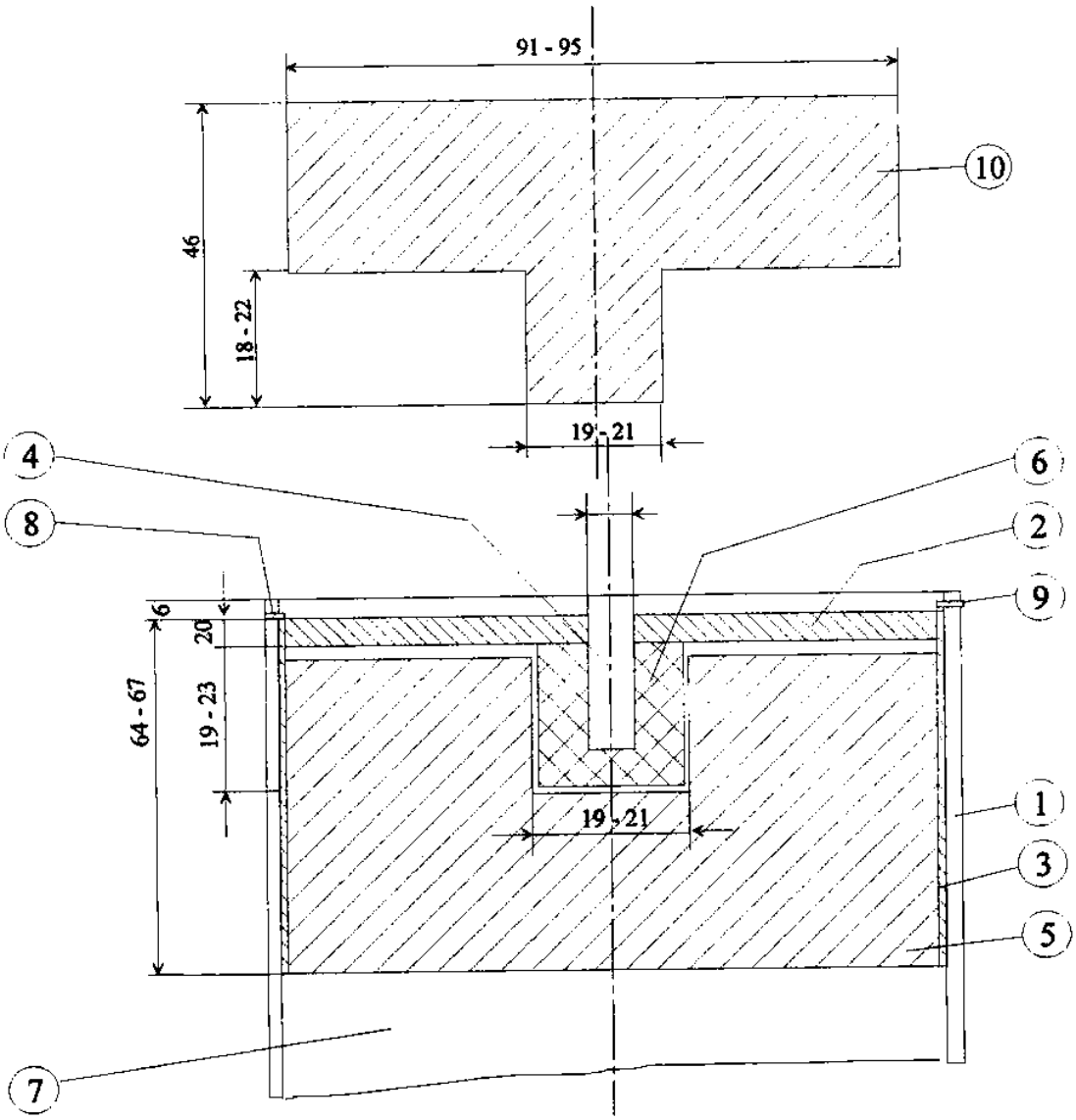

Dimensions in mm

①	Steel tube	⑥	Compressed pellet
②	Wooden disc	⑦	Test sample
③	Plastic or cardboard cylinder	⑧	4-mm diameter hole drilled to receive split pin (9)
④	Wooden rod	⑨	Split pin
⑤	Plastic explosive	⑩	Wooden die for (5) diameter as for detonator

Figure 2: ***Positioning of the steel tube on the firing site***

① Steel tube

② Lead cylinders

③ Steel block

④ Bottom plate

⑤ Booster charge

[1] to [6] numbers of lead cylinders

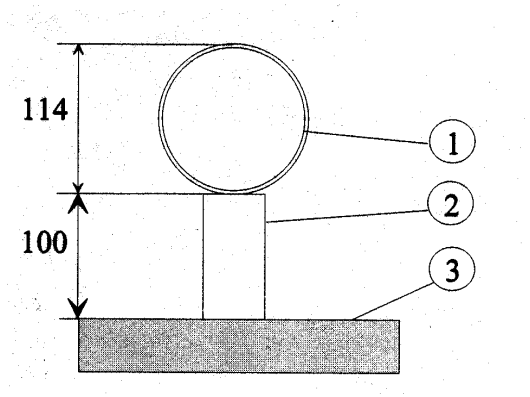

dimensions in mm

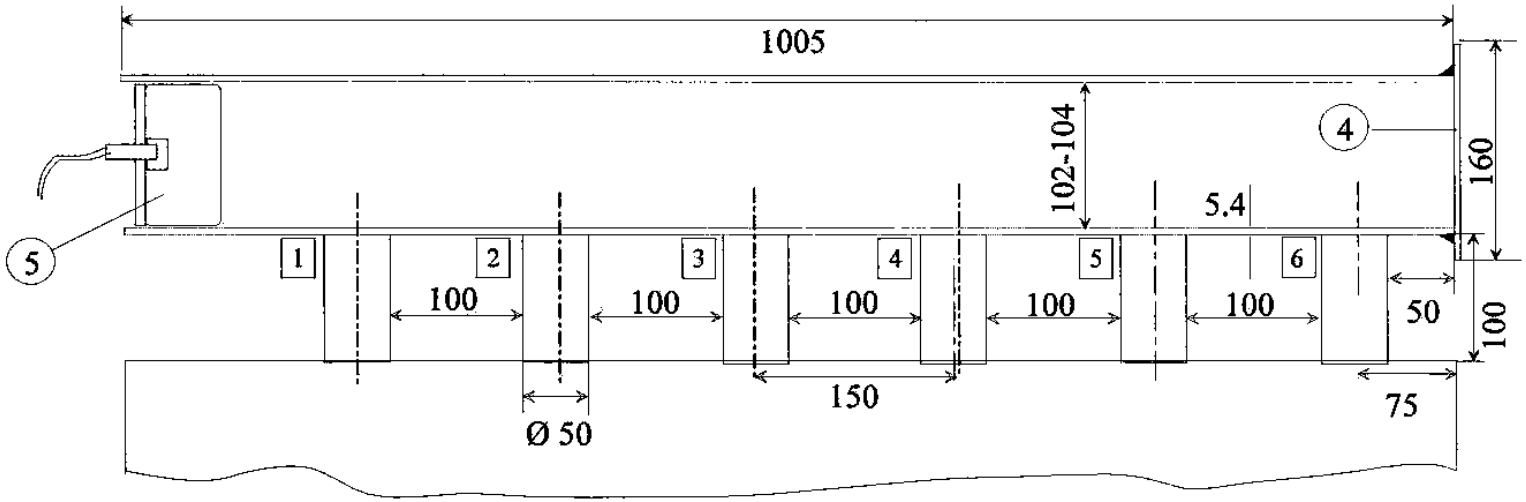

6 Self-heating test for charcoal

6.1 *Apparatus*

6.1.1 *Oven*. A laboratory oven fitted with internal air circulation and capable of being controlled at 140°C ± 2°C.

6.1.2 *Wire mesh cube.* Construct an open-top cube, 100 mm side, from phosphor bronze gauze 18.000 mesh per square centimetre (350 x 350 mesh). Insert it inside a slightly larger, well-fitting cube, made of phosphor bronze gauze 11 mesh per square centimetre (8 x 8 mesh). Fit the outer cube with a handle or hooks so that it can be suspended from above.

6.1.3 *Temperature measurement.* A suitable system to measure and record the temperature of the oven and in the centre of the cube. "Chromel-alumel" thermocouples, made from 0.27 mm diameter wire, are suitable for measuring the temperature range expected.

6.2 *Procedure*

6.2.1 Fill the cube with carbon and tap down gently, adding carbon until the cube is full. Suspend the sample in the centre of the oven which has been preheated to 140°C ± 2°C. Insert one of the thermocouples in the centre of the sample and the other between the cube and the oven wall. Maintain the temperature of the oven at 140°C ± 2°C for 12 hours and record the oven temperature and the sample temperature.

6.3 *Results*

6.3.1 Non-activated carbon, non-activated charcoal, carbon black and lamp black fail the test if the temperature at any time during the 12 hours exceeded 200°C.

6.3.2 Activated carbon and activated charcoal fail the test if the temperature at any time during the 12 hours exceeded 400°C.

APPENDIX 3

PROPERTIES OF DRY BULK CARGOES

1 Non-Cohesive cargoes

1.1 The following cargoes are non-cohesive when dry:

AMMONIUM NITRATE
AMMONIUM NITRATE BASED FERTILIZERS (TYPE A, TYPE B and NON-HAZARDOUS)
AMMONIUM SULPHATE
BORAX, anhydrous
CALCIUM NITRATE FERTILIZER
CASTOR BEANS
DIAMMONIUM PHOSPHATE
MONOAMMONIUM PHOSPHATE
POTASSIUM CHLORIDE
POTASH
POTASSIUM NITRATE
POTASSIUM SULPHATE
SODIUM NITRATE
SODIUM NITRATE AND POTASSIUM NITRATE MIXTURE
SUPERPHOSPHATE
UREA

1.2 Prior to completion of loading, the angle of repose of the materials to be loaded should be determined (see section 6) so as to determine which provisions of this Code relating to trimming apply (see section 5).

1.3 All other cargoes listed in this appendix are cohesive and use of the angle of repose is, therefore, not appropriate. Cargoes not listed should be treated as cohesive until otherwise shown.

2 Cargoes which may liquefy

2.1 Many fine-particled cargoes if possessing a sufficiently high moisture content, are liable to flow. Thus any damp or wet cargo containing a proportion of fine particles should be tested for flow characteristics prior to loading.

3 Precautions for the cargoes which may possess a chemical hazard

3.1 In circumstances where consultation with the competent authority is required prior to bulk shipment of cargoes, it is equally important to consult authorities at the port of loading and discharge concerning requirements which may be in force.

3.2 Where required, the Medical First Guide for Use in Accidents Involving Dangerous Goods (MFAG) should be consulted prior to loading.

APPENDIX 4

PERFORMANCE SPECIFICATION FOR THE MEASUREMENT OF THE DENSITY OF SOLID BULK CARGOES

INTRODUCTION

SOLAS chapter XII, regulation 10, requires the shipper, prior to loading bulk cargo on a bulk carrier, to declare the density of the cargo. The density has to be verified by an accredited testing organization.

The following specification (basis MSC/Circ.908) provides a uniform and practical way of determining the density of a bulk cargo.

A form which should be used to record the measurement of the density of a bulk cargo is annexed to the schedule.

1 Scope

1.1 This specification may be used to determine the bulk density of bulk cargoes.

1.2 Bulk density is the weight of solids, air and water per unit volume. It includes the moisture content of the cargo and the voids whether filled with air or water.

1.3 The density should be expressed in kilograms per cubic metre (kg/m^3).

2 Apparatus

2.1 This specification provides for the use of a container of known volume and tare weight.

2.2 The container should be sufficiently rigid to prevent deformation or volume changes occurring during the test. Where the material contains lumps, or will not readily flow into corners, the container should be of cylindrical shape and/or of large size in comparison to the size of lumps. Its capacity must be large enough to contain a representative sample of the cargo for which the density is to be determined.

2.3 The internal surfaces of the container should be smooth with any attachments such as handles being fitted to the exterior.

2.4 Weighing should be done using a weighing instrument certificated by an accredited testing organization.

3 Procedure

3.1 A sample that is representative of the particle size, compaction and moisture of the material to be loaded on the ship should be selected.

3.2 The container should be filled with a sample of the cargo so that it is trimmed level with the top of the container. The cargo sample should not be tamped.[1]

3.3 The weight of the filled container should be measured and the tare weight subtracted to obtain the weight of the sample.

3.4 The density of the sample should be calculated by dividing the weight of the bulk material to be loaded by the volume of the container.

4 Recording results

4.1 The density of the sample should be recorded using the recommended form given in the annex and made available when requested.

4.2 The result of the density measurement should be signed by a representative of the accredited testing organization.

[1] Reference is made to paragraph 1.10 – "Representative test sample" and Appendix 2 – "Laboratory test procedure associated apparatus and standards" of the Code of Safe Practice for Solid Bulk Cargoes (BC Code).

ANNEX

RECORD OF DENSITY MEASUREMENT

The density of the cargo has been measured in accordance with the uniform method of density measurement of bulk cargoes.

Cargo (name and relevant reference in the BC Code)	:	
Shipper (name, address, telephone, etc.)	:	
Sample origin (stock pile, ship's hold, etc.)	:	
Date (sampling and density measurement)	:	
Gross weight (GW) (container plus sample)	:	kg
Tare weight (TW) (container)	:	kg
Net weight (NW) (sample) (NW=GW-TW)	:	kg
Volume (V) (container)	:	m^3
Calculated density (d) of the cargo (d=NW/V)	:	kg/m^3

Measurement conducted by the accredited testing organization
(Signature, stamp)

Done on at

APPENDIX 5

(MSC/CIRC.[…])

LISTS OF SOLID BULK CARGOES FOR WHICH A FIXED GAS FIRE-EXTINGUISHING SYSTEM MAY BE EXEMPTED OR FOR WHICH A FIXED GAS FIRE-EXTINGUISHING SYSTEM IS INEFFECTIVE

1 The Maritime Safety Committee, at its sixty-fourth session (5 to 9 December 1994), agreed there was a need to provide Administrations with guidelines regarding the provisions of regulation II-2/10 of the SOLAS Convention concerning exemptions from the requirements for fire-extinguishing systems.

2 The Committee also agreed the annexed table 1 providing a list of solid bulk cargoes, for which a fixed gas fire-extinguishing system may be exempted and recommended Member Governments to take into account the information contained in that table when granting exemptions under the provisions of regulation II-2/10.7.1.4.

3 The Committee further agreed the annexed table 2 providing a list of solid bulk cargoes for which a fixed gas fire-extinguishing system is ineffective, and recommended that cargo spaces in a ship engaged in the carriage of cargoes listed in table 2 be provided with a fire-extinguishing system which provides equivalent protection. The Committee agreed that Administrations should take account of the provisions of regulation II-2/19.3.1 when determining suitable requirements for an equivalent fire-extinguishing system.

4 The annexed tables will be reviewed periodically by the Maritime Safety Committee. Member Governments are requested to provide the Organization, when granting exemptions to ships for the carriage of cargoes not included in table 1, with data on the non-combustibility or fire risk properties of such cargoes. Member Governments are also requested to provide the Organization, when equivalent fire-extinguishing systems are required for the agreed carriage of cargoes not included in table 2, with data on the inefficiency of fixed gas fire-extinguishing systems for such cargoes.

5 The Maritime Safety Committee at its seventy-ninth session (1 to 10 December 2004) reviewed the above mentioned tables as set out in the annex.

6 The purpose of this circular is to provide guidance to Administrations. It should not, however, be considered as precluding Administrations of their right to grant exemptions for cargoes not included in table 1 or to impose any conditions when granting such exemptions under the provisions of SOLAS regulation II-2/10.7.1.4.

7 This circular supersedes MSC/Circ.671.

ANNEX

Table 1

List of solid bulk cargoes for which a fixed gas fire-extinguishing system may be exempted

Cargoes including but not limited to those listed in regulation II-2/10

Ore
Coal (COAL and BROWN COAL BRIQUETTES)
Grain
Unseasoned timber

Cargoes listed in the Code of Safe Practice for Solid Bulk Cargoes (BC Code), which are not combustible or constitute a low fire-risk.

All cargoes not categorized into group B in the BC Code

The following cargoes categorized into group B in the BC Code:

ALUMINIUM SMELTING BY-PRODUCTS, UN 3170
ALUMINIUM FERROSILICON POWDER (including briquettes), UN 1395
ALUMINIUM SILICON POWDER, UNCOATED, UN 1398
CALCINED PYRITES (Pyritic ash)
DIRECT REDUCED IRON Briquettes, hot moulded
FERROPHOSPHORUS (including briquettes)
FERROSILICON, with more than 30% but less than 90% silicon (including briquettes), UN 1408
FERROSILICON with 25% to 30% silicon, or 90% or more silicon (including briquettes)
FLUORSPAR (calcium fluoride)
LIME (UNSLAKED)
MAGNESIA (UNSLAKED)
PEAT MOSS
PETROLEUM COKE*
PITCH PRILL

RADIOACTIVE MATERIAL, LOW SPECIFIC ACTIVITY MATERIAL (LSA-1), UN 2912
RADIOACTIVE MATERIAL, SURFACE CONTAMINATED OBJECT(S) (SCO-1), UN 2913
SILICOMANGANESE,
SULPHUR (lump and coarse-grained powder), UN 1350
VANADIUM ORE,
WOODCHIPS, with moisture content of 15% or more
WOOD PULP PELLETS, with moisture content of 15% or more
ZINC ASHES, UN 1435

* When loaded and transported under the provisions of the BC Code.

Table 2

List of Solid Bulk Cargoes for which a fixed gas fire-extinguishing system is ineffective and for which a fire-extinguishing system giving equivalent protection shall be available

The following cargoes categorized into Group B of the BC Code:

ALUMINIUM NITRATE, UN 1438

AMMONIUM NITRATE, UN 1942

AMMONIUM NITRATE BASED FERTILIZERS, UN 2067

AMMONIUM NITRATE BASED FERTILIZERS, UN 2071

BARIUM NITRATE, UN 1446

CALCIUM NITRATE, UN 1454

LEAD NITRATE, UN 1469

MAGNESIUM NITRATE, UN 1474

POTASSIUM NITRATE, UN 1486

SODIUM NITRATE, UN 1498

SODIUM NITRATE AND POTASSIUM NITRATE, MIXTURE, UN 1499

APPENDIX 6

PROCEDURES FOR GAS MONITORING OF COAL CARGOES

1 Observations

Carbon monoxide monitoring, when conducted in accordance with the following recommendations, will provide a reliable early indication of self-heating within a coal cargo. This allows preventive action to be considered without delay. A steady rise in the level of carbon monoxide detected within a hold is a conclusive indication that self-heating is taking place.

All vessels engaged in the carriage of coal should carry on board an instrument for measuring methane, oxygen and carbon monoxide gas concentrations ("General requirements, for all coals"in the COAL entry, Appendix 1), so that the atmosphere within the cargo space may be monitored. This instrument should be regularly serviced and calibrated in accordance with the manufacturer's instructions. When properly maintained and operated, this instrument will provide reliable data about the atmosphere within the cargo space. Care needs to be exercised in interpreting methane measurements carried out in the low oxygen concentrations often found in unventilated cargo holds. The catalytic sensors normally used for the detection of methane rely on the presence of sufficient oxygen for accurate measurement. This phenomenon does not affect the measurement of carbon monoxide, or measurement of methane by infrared sensor. Further guidance may be obtained from the instrument manufacturer.

2 Sampling and measurement procedure

2.1 *Equipment*

An instrument is required which is capable of measuring methane, oxygen and carbon monoxide concentrations. The instrument should be fitted with an aspirator, flexible connection and a length of tubing to enable a representative sample to be obtained from within the square of the hatch. Stainless steel tubing approximately 0.5 m in length and 6 mm nominal internal diameter with an integral stainless steel threaded collar is preferred. The collar is necessary to provide an adequate seal at the sampling point.

A suitable filter should be used to protect the instrument against the ingress of moisture as recommended by the manufacturer. The presence of even a small amount of moisture will compromise the accuracy of the measurement.

2.2 *Siting of sampling points*

In order to obtain meaningful information about the behaviour of coal in a hold, gas measurements should be made via one sample point per hold. To ensure flexibility of measurement in adverse weather, however, two sample points should be provided per hold, one on the port side and one on the starboard side of the hatch cover (refer to figure 2.7). Measurement from either of these locations is satisfactory.

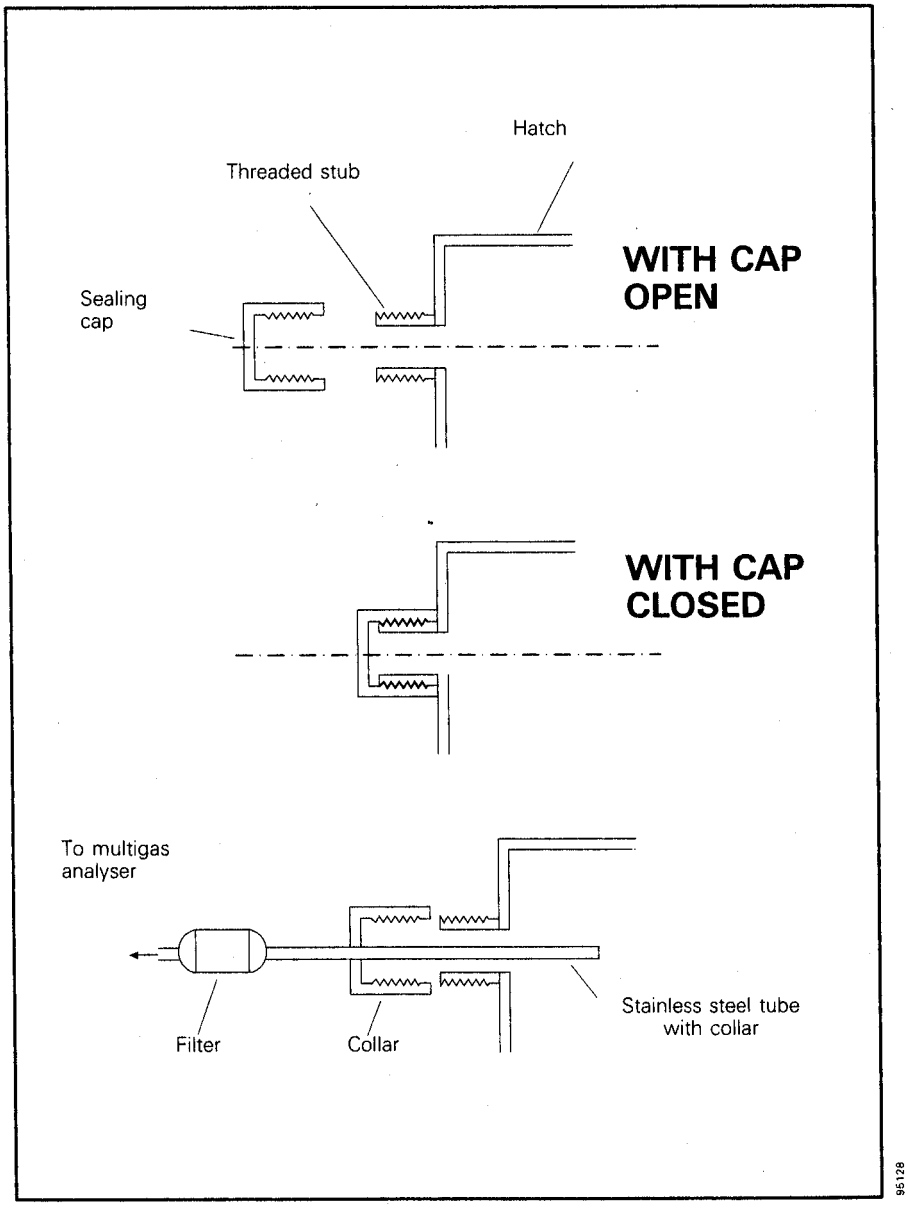

Figure 2.7 ***Diagram of gas sampling point***

Each sample point should comprise a hole of diameter approximately 12 mm positioned as near to the top of the hatch coaming as possible. It should be sealed with a screw cap to prevent ingress of water and air. It is essential that this cap is securely replaced after each measurement to maintain a tight seal.

The provision of any sample point should not compromise the seaworthiness of the vessel.

3 Measurement

Ensure that the instrument is calibrated and working properly in accordance with the manufacturer's instructions. Remove the sealing cap, insert the stainless steel tube into the sampling point and tighten the integral cap to ensure an adequate seal. Connect the instrument to the sampling tube. Draw a sample of the hold atmosphere through the tube, using the aspirator, until steady readings are obtained. Log the results on a form which records cargo hold, date and time for each measurement.

3.1 *Measurement strategy*

The identification of incipient self-heating from measurement of gas concentrations is more readily achieved under unventilated conditions. This is not always desirable because of the possibility of the accumulation of methane to dangerous concentrations. This is primarily, but not exclusively, a problem in the early stagesof a voyage. Therefore it is recommended that holds are initially ventilated until measured methane concentrations are at an acceptably low level.

3.2 *Measurement in unventilated holds*

Under normal conditions one measurement per day is sufficient as a precautionary measure. However, if carbon monoxide levels are higher than 30 ppm then the frequency should be increased to at least twice a day at suitably spaced intervals. Any additional results should be logged.

If the carbon monoxide level in any hold reaches 50 ppm a self-heating condition may be developing and the owners of the vessel should be notified.

3.3 *Measurement in ventilated holds*

If the presence of methane is such that the ventilators are required to remain open, then a different procedure should be applied to enable the onset of any incipient self-heating to be detected.

To obtain meaningful data the ventilators should be closed for a period before the measurements are taken. This period may be chosen to suit the operational requirements of the vessel, but it is recommended that it is not less than four hours. It is vital in the interests of data interpretation that the shutdown time is constant whichever time period is selected. These measurements should be taken on a daily basis. If the carbon monoxide results exhibit a steady rise over three consecutive days, or exceed 50 ppm on any day, the owners of the vessel should be notified.

APPENDIX 7

RECOMMENDATIONS FOR ENTERING ENCLOSED SPACES ABOARD SHIPS

Preamble

The object of these recommendations is to encourage the adoption of safety procedures aimed at preventing casualties to ships personnel entering enclosed spaces where there may be an oxygen deficient, flammable and/or toxic atmosphere.

Investigations into the circumstances of casualties that have occurred have shown that accidents on board ships are in most cases caused by an insufficient knowledge of, or disregard for, the need to take precautions rather than a lack of guidance.

The following practical recommendations apply to all types of ships and provide guidance to seafarers. It should be noted that on ships where entry into enclosed spaces may be infrequent, for example, on certain passenger ships or small general cargo ships, the dangers may be less apparent, and accordingly there may be a need for increased vigilance.

The recommendations are intended to complement national laws or regulations, accepted standards or particular procedures, which may exist for specific trades, ships or types of shipping operations.

It may be impracticable to apply some recommendations to particular situations. In such cases, every endeavour should be made to observe the intent of the recommendations, and attention should be paid to the risks that may be involved.

1 Introduction

The atmosphere in any enclosed space may be deficient in oxygen and/or contain flammable and/or toxic gases or vapours. Such an unsafe atmosphere could also subsequently occur in a space previously found to be safe. Unsafe atmosphere may also be present in spaces adjacent to those spaces where a hazard is known to be present.

2 Definitions

2.1 *Enclosed space* means a space, which has any of the following characteristics:

.1 limited openings for entry and exit;

.2 unfavourable natural ventilation; and

.3 is not designed for continuous worker occupancy,

and includes, but is not limited to, cargo spaces, double bottoms, fuel tanks, ballast tanks, pump-rooms, compressor rooms, cofferdams, void spaces, duct keels, inter-barrier spaces, engine crankcases and sewage tanks.

2.2 *Competent person* means a person with sufficient theoretical knowledge and practical experience to make an informed assessment of the likelihood of a dangerous atmosphere being present or subsequently arising in the space.

2.3 *Responsible person* means a person authorised to permit entry into an enclosed space and having sufficient knowledge of the procedures to be followed.

3 Assessment of risk

3.1 In order to ensure safety, a competent person should always make a preliminary assessment of any potential hazards in the space to be entered, taking into account previous cargo carried, ventilation of the space, coating of the space and other relevant factors. The competent person's preliminary assessment should determine the potential for the presence of an oxygen-deficient, flammable or toxic atmosphere.

3.2 The procedures to be followed for testing the atmosphere in the space and for entry should be decided on the basis of the preliminary assessment. These will depend on whether the preliminary assessment shows that:

.1 there is minimal risk to the health or life of personnel entering the space;

.2 there is no immediate risk to health or life but a risk could arise during the course of work in the space; and

.3 a risk to health or life is identified.

3.3 Where the preliminary assessment indicates minimal risk to health or life or potential for a risk to arise during the course of work in the space, the precautions described in 4, 5, 6 and 7 should be followed as appropriate.

3.4 Where the preliminary assessment identifies risk to life or health, if entry is to be made, the additional precautions specified in section 8 should also be followed.

4 Authorization of entry

4.1 No person should open or enter an enclosed space unless authorised by the master or nominated responsible person and unless the appropriate safety procedures laid down for the particular ship have been followed.

4.2 Entry into enclosed spaces should be planned and the use of an entry permit system, which may include the use of a checklist, is recommended. An Enclosed Space Entry Permit should be issued by the master or nominated responsible person, and completed by a person who enters the space prior to entry. An example of the Enclosed Space Entry Permit is provided in the appendix.

5 General precautions

5.1 The master or responsible person should determine that it is safe to enter an enclosed space by ensuring:

.1 that potential hazards have been identified in the assessment and as far as possible isolated or made safe;

.2 that the space has been thoroughly ventilated by natural or mechanical means to remove any toxic or flammable gases, and to ensure an adequate level of oxygen throughout the space;

.3 that the atmosphere of the space has been tested as appropriate with properly calibrated instruments to ascertain acceptable levels of oxygen and acceptable levels of flammable or toxic vapours;

.4 that the space has been secured for entry and properly illuminated;

.5 that a suitable system of communication between all parties for use during entry has been agreed and tested;

.6 that an attendant has been instructed to remain at the entrance to the space whilst it is occupied;

.7 that rescue and resuscitation equipment has been positioned ready for use at the entrance to the space, and that rescue arrangements have been agreed;

.8 that personnel are properly clothed and equipped for the entry and subsequent tasks; and

.9 that a permit has been issued authorizing entry.

The precautions in .6 and .7 may not apply to every situation described in this section. The person authorizing entry should determine whether an attendant and the positioning of rescue equipment at the entrance to the space is necessary.

5.2 Only trained personnel should be assigned the duties of entering, functioning as attendants, or functioning as members of rescue teams. Ships' crews should be drilled periodically in rescue and first aid.

5.3 All equipment used in connection with entry should be in good working condition and inspected prior to use.

6 Testing the atmosphere

6.1 Appropriate testing of the atmosphere of a space should be carried out with properly calibrated equipment by persons trained in the use of the equipment. The manufacturers' instructions should be strictly followed. Testing should be carried out before any person enters the space, and at regular intervals thereafter until all work is completed. Where appropriate, the testing of the space should be carried out at as many different levels as is necessary to obtain a representative sample of the atmosphere in the space.

6.2 For entry purposes, steady readings of the following should be obtained:

.1 21% oxygen by volume by oxygen content meter; and

.2 not more than 1% of lower flammable limit (LFL) on a suitably sensitive combustible gas indicator, where the preliminary assessment has determined that there is potential for flammable gases or vapours.

If these conditions cannot be met, additional ventilation should be applied to the space and re-testing should be conducted after a suitable interval. Any gas testing should be carried out with ventilation to the enclosed space stopped, in order to obtain accurate readings.

6.3 Where the preliminary assessment has determined that there is potential for the presence of toxic gases and vapours, appropriate testing should be carried out using fixed or portable gas or vapour detection equipment. The readings obtained by this equipment should be below the occupational exposure limits for the toxic gases or vapours given in accepted national or international standards. It should be noted that testing for flammability does not provide a suitable means of measuring for toxicity, nor vice versa.

6.4 It should be emphasized that pockets of gas or oxygen-deficient areas can exist, and should always be suspected, even when an enclosed space has been satisfactorily tested as being suitable for entry.

7 Precautions during entry

7.1 The atmosphere should be tested frequently whilst the space is occupied, and persons should be instructed to leave the space should there be deterioration in the conditions.

7.2 Ventilation should continue during the period that the space is occupied and during temporary breaks. Before re-entry after a break, the atmosphere should be re-tested. In the event of failure of the ventilation system, any persons in the space should leave immediately.

7.3 In the event of an emergency, under no circumstances should the attending crew member enter the space before help has arrived and the situation has been evaluated to ensure the safety of those entering the space to undertake rescue operations.

8 Additional precautions for entry into a space where the atmosphere is known or suspected to be unsafe

8.1 If the atmosphere in an enclosed space is suspected or known to be unsafe, the space should only be entered when no practical alternative exists. Entry should only be made for further testing, essential operation, and safety of life or safety of a ship. The number of persons entering the space should be the minimum compatible with the work to be performed.

8.2 Suitable breathing apparatus, e.g. of the air-line or self-contained type, should always be worn, and only personnel trained in its use should be allowed to enter the space. Air-purifying respirators should not be used, as they do not provide a supply of clean air from a source independent of the atmosphere within the space.

8.3 The precautions specified in 5 should also be followed, as appropriate.

8.4 Rescue harnesses should be worn and, unless impractical, lifelines should be used.

8.5 Appropriate protective clothing should be worn particularly where there is any risk of toxic substances or chemicals coming into contact with the skin or eyes of those entering the space.

8.6 The advice in 7.3 concerning emergency rescue operations is particularly relevant in this context.

9 Hazards related to specific types of cargo

9.1 *Dangerous goods in packaged form*

9.1.1 The atmosphere of any space containing dangerous goods may put at risk the health or life of any person entering it. Dangers may include flammable, toxic or corrosive gases or vapours that displace oxygen, residues on packages and spilled material. The same hazards may be present in spaces adjacent to the cargo spaces. Information on the hazards of specific substances is contained in the IMDG Code, the Emergency Procedures for Ships Carrying Dangerous Goods (EMS) and Materials Safety Data Sheets (MSDS). If there is evidence or suspicion that leakage of dangerous substances has occurred, the precautions specified in 8 should be followed.

9.1.2 Personnel required to deal with spillages or to remove defective or damaged packages should be appropriately trained and wear suitable breathing apparatus and appropriate protective clothing.

9.2 *Bulk liquid*

The tanker industry has produced extensive advice to operators and crews of ships engaged in the bulk carriage of oil, chemicals and liquefied gases, in the form of specialist international safety guides. Information in the guides on enclosed space entry amplifies these recommendations and should be used as the basis for preparing entry plans.

9.3 ***Solid bulk***

On ships carrying solid bulk cargoes, dangerous atmospheres may develop in cargo spaces and adjacent spaces. The dangers may include flammability, toxicity, oxygen depletion or self-heating, which should be identified in shipping documentation. For additional information, reference should be made to the Code of Safe Practice for Solid Bulk Cargoes.

9.4 ***Oxygen-depleting cargoes and materials***

A prominent risk with such cargoes is oxygen depletion due to the inherent form of the cargo, for example, self-heating, oxidation of metals and ores or decomposition of vegetable oils, animal fats, grain and other organic materials or their residues.

The materials listed below are known to be capable of causing oxygen depletion. However, the list is not exhaustive. Oxygen depletion may also be caused by other materials of vegetable or animal origin, by flammable or spontaneously combustible materials, and by materials with a high metal content:

.1 grain, grain products and residues from grain processing (such as bran, crushed grain, crushed malt or meal), hops, malt husks and spent malt;

.2 oilseeds as well as products and residues from oilseeds (such as seed expellers, seed cake, oil cake and meal);

.3 copra;

.4 wood in such forms as packaged timber, roundwood, logs, pulpwood, props (pit props and other propwood), woodchips, woodshavings, woodpulp pellets and sawdust;

.5 jute, hemp, flax, sisal, kapok, cotton and other vegetable fibres (such as esparto grass/Spanish grass, hay, straw, bhusa), empty bags, cotton waste, animal fibres, animal and vegetable fabric, wool waste and rags;

.6 fishmeal and fishscrap;

.7 guano;

.8 sulphidic ores and ore concentrates;

.9 charcoal, coal and coal products;

.10 direct reduced iron (DRI);

.11 dry ice;

.12 metal wastes and chips, iron swarf, steel and other turnings, borings, drillings, shavings, filings and cuttings; and

.13 scrap metal.

9.5 *Fumigation*

When a ship is fumigated, the Recommendations on the Safe Use of Pesticides in Ships is detailed in Appendix 8 and should be followed. Spaces adjacent to fumigated spaces should be treated as if fumigated.

10 Conclusion

Failure to observe simple procedures can lead to people being unexpectedly overcome when entering enclosed spaces. Observance of the principles outlined above will form a reliable basis for assessing risks in such spaces and for taking necessary precautions.

APPENDIX

EXAMPLE OF AN ENCLOSED SPACE ENTRY PERMIT

This permit relates to entry into any enclosed space and should be completed by the master or responsible officer and by the person entering the space or authorized team leader.

General
Location/name of enclosed space.....

Reason for entry.....
This permit is valid from: .....hrs Date.....…….....
to : .....…..hrs Date.....……...
(See note 1)

Section 1 - Pre-entry preparation

(To be checked by the master or nominated responsible person)	Yes	No
● Has the space been thoroughly ventilated?	❒	❒
● Has the space been segregated by blanking off or isolating all connecting pipelines or valves and electrical power/equipment?	❒	❒
● Has the space been cleaned where necessary?	❒	❒
● Has the space been tested and found safe for entry? (See note 2)	❒	❒

● Pre-entry atmosphere test readings:

- oxygen .....…...…… % vol (21%) By: ….....……
- hydrocarbon .....…… % LFL (less than 1%)
- toxic gases .....…… ppm (specific gas and PEL) Time: .....……

(See note 3)

● Have arrangements been made for frequent atmosphere checks to be made while the space is occupied and after work breaks?	❒	❒
● Have arrangements been made for the space to be continuously ventilated throughout the period of occupation and during work breaks?	❒	❒
● Are access and illumination adequate?	❒	❒

	Yes	No
● Is rescue and resuscitation equipment available for immediate use by the entrance to the space?	❒	❒
● Has a responsible person been designated to be in constant attendance at the entrance to the space?	❒	❒
● Has the officer of the watch (bridge, engine room, cargo control room) been advised of the planned entry?	❒	❒
● Has a system of communication between all parties been tested and emergency signals agreed?	❒	❒
● Are emergency and evacuation procedures established and understood by all personnel involved with the enclosed space entry?	❒	❒
● Is all equipment used in good working condition and inspected prior to entry?	❒	❒
● Are personnel properly clothed and equipped?	❒	❒

Section 2 - Pre-entry checks
(To be checked by the person entering the space or authorized team leader)

	Yes	No
● I have received instructions or permission from the master or nominated responsible person to enter the enclosed space	❒	❒
● Section 1 of this permit has been satisfactorily completed by the master or nominated responsible person	❒	❒
● I have agreed and understand the communication procedures	❒	❒
● I have agreed upon a reporting interval of.....minutes	❒	❒
● Emergency and evacuation procedures have been agreed and are understood	❒	❒
● I am aware that the space must be vacated immediately in the event of ventilation failure or if atmosphere tests show a change from agreed safe criteria	❒	❒

Section 3 - Breathing apparatus and other equipment
(To be checked jointly by the master or nominated responsible person and the person who is to enter the space)

	Yes	No
● Those entering the space are familiar with the breathing apparatus to be used	❒	❒
● The breathing apparatus has been tested as follows:		
- gauge and capacity of air supply	.....	.....
- low pressure audible alarm	.....	
- face mask - under positive pressure and not leaking	.....	
● The means of communication has been tested and emergency signals agreed	❒	❒
● All personnel entering the space have been provided with rescue harnesses and, where practicable, lifelines	❒	❒

Signed upon completion of sections 1, 2 and 3 by:

Master or nominated responsible person ..... Date.....… Time.....

Responsible person supervising entry .....… Date..... Time.....

Person entering the space or authorized team leader ..... Date..... Time.....

Section 4 - Personnel entry
(To be completed by the responsible person supervising entry)

Names	Time in	Time out
.....	.....	.....
.....	.....	.....
.....	.....	.....
.....	.....	.....

Section 5 - Completion of job
(To be completed by the responsible person supervising entry)

- Job completed Date..... Time.....
- Space secured against entry Date..... Time.....
- The officer of the watch has been duly informed Date..... Time.....

Signed upon completion of sections 4 and 5 by:

Responsible person supervising entry .....…..... Date…..... Time.....….....

THIS PERMIT IS RENDERED INVALID SHOULD VENTILATION OF THE SPACE STOP OR IF ANY OF THE CONDITIONS NOTED IN THE CHECKLIST CHANGE

Notes:

1 The permit should contain a clear indication as to its maximum period of validity.

2 In order to obtain a representative cross-section of the space's atmosphere, samples should be taken from several levels and through as many openings as possible. Ventilation should be stopped for about 10 minutes before the pre-entry atmosphere tests are taken.

3 Tests for specific toxic contaminants, such as benzene or hydrogen sulphide, should be undertaken depending on the nature of the previous contents of the space.

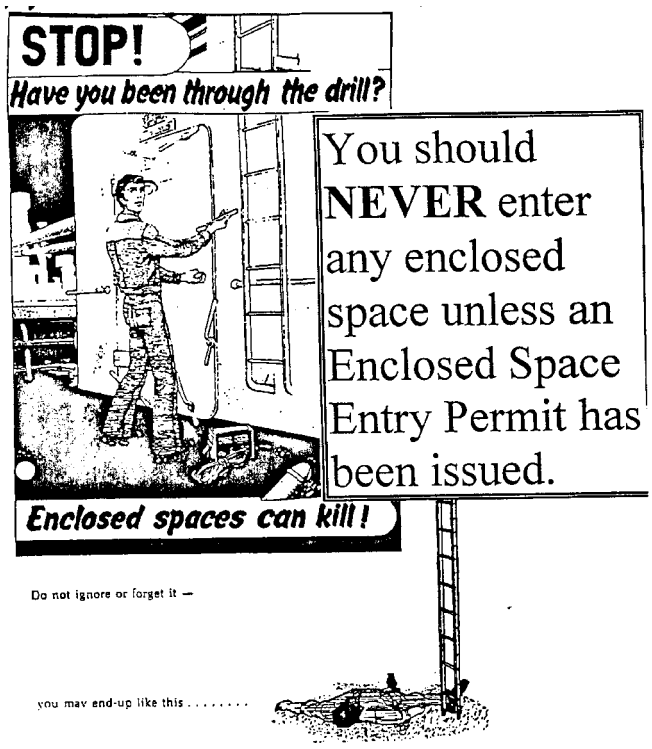
STOP!
Have you been through the drill?
You should NEVER enter any enclosed space unless an Enclosed Space Entry Permit has been issued.
Enclosed spaces can kill!
Do not ignore or forget it —
you may end-up like this . . . . . .

APPENDIX 8

RECOMMENDATIONS ON THE SAFE USE OF PESTICIDES IN SHIPS

Foreword

The Recommendations on the *Safe Use of Pesticides in Ships* are intended as a guide to competent authorities, mariners, fumigators, fumigant and pesticide manufacturers, and others concerned. They were first circulated in September 1971 and revised by the Maritime Safety Committee in 1984, 1993, 1995 and 1996. This edition has been amended to conform with the recent edition of *Medical First Aid Guide for Use in Accidents involving Dangerous Goods* and Amendment 31-02 of the IMDG Code.*

RECOMMENDATIONS

The *Recommendations on the Safe Use of Pesticides in Ships* are recommended to governments in pursuance of their obligations under chapter VI of the 1974 SOLAS Convention as amended.

* Attention should be paid to DSC/Circ.11 (30 April 2003).

Contents

			Page
1	**Introduction**…….…….		393
	1.2.1	Insects in cargo spaces and cargoes ……..…	393
	1.2.2	Rodents …….…….	393
2	**Prevention of infestation**		
	2.1	Maintenance and sanitation ……...	394
	2.2	Main sites of infestation ……	394
3	**Chemical control of insect infestation**		
	3.1	Methods of chemical disinfestation ……	395
	3.1.1	Types of pesticides and methods of insect control …….	395
	3.1.2	Contact insecticides ……	396
	3.1.3	Fumigants ……	397
	3.2	Disinfestation of empty cargo spaces ……..	397
	3.3	Disinfestation of food stores, galleys and crew and passenger accommodation ……	398
	3.4	Disinfestation of cargoes and surrounds …….	398
	3.4.1	Fumigation of cargo spaces and cargoes ……..…	398
	3.4.2	Fumigation with aeration (ventilation) in port …….	398
	3.4.3	Fumigation continued in transit …….…..	399
	3.5	Carriage of fumigated freight containers, barges and other cargo transport units on a ship ……..	403
	3.5.1	Loaded without ventilation after fumigation …….	403
	3.5.2	Fumigated freight containers, barges or other cargo transport units ventilated before loading ……	404
	3.5.3	Fumigation after loading on board a ship ……..	404
4	**Control of rodent pests**		
	4.1	General ……	405
	4.2	Fumigation and baiting ……...…	405
	4.3	Rodent baits ……..	405
5	**Regulations for the use of pesticides**		
	5.1	National and international controls on pesticide usage……..	406
6	**Safety precautions - general**		
	6.1	Pesticide materials …….	406
	6.2	Space and surface spraying ……	406
	6.3	Fumigation ……	407
	6.4	Contact insecticides in the cargo space, admixture with raw grain ……..	407
	6.5	Exposure to pesticides resulting in illness ……	408
Annex 1	**Pesticides suitable for shipboard use** ……		409
Annex 2	**Threshold limit values (TLV) for vapours in air** …….		413
Annex 3	**Fumigation warning sign** ……		414
Annex 4	**Model checklist for in-transit fumigation with phosphine** ……..		415

1 Introduction

1.1 These Recommendations have been compiled by the Sub-Committee on the Carriage of Dangerous Goods and the Sub-Committee on Containers and Cargoes, both of which have been amalgamated into the Sub-Committee on Dangerous Goods, Solid Cargoes and Containers since 1995, under the direction of the Maritime Safety Committee of the International Maritime Organization (IMO).

1.2 Insects and rodents on ships are objectionable for various reasons. In addition to aesthetic and nuisance aspects, pests may damage equipment and spread disease and infection, contaminate food in galleys and food stores, and cause damage to cargoes that will result in commercial or other losses. Very few pesticides are suitable for use against all kinds of pests that may occur aboard or in different parts of ships. It is therefore necessary to consider the main categories of pesticides individually.

1.2.1 *Insects in cargo spaces and cargoes*

1.2.1.1 Insect and mite pests of plant and animal products may be carried into the cargo spaces with goods (*introduced infestation*); they may move from one kind of product to another (*cross-infestation*) and may remain to attack subsequent cargoes (*residual infestation*). Their control may be required to comply with phytosanitary requirements to prevent spread of pests and for commercial reasons to prevent infestation and contamination of, or damage to, cargoes of human and animal food.* In severe cases of infestation of bulk cargoes such as cereals, excessive heating may occur.

1.2.2 *Rodents*

1.2.2.1 Rodents should be controlled not only because of the damage they may do to cargo or the ship's equipment, but also, as required by the International Health Regulations, to prevent the spread of disease.

1.3 The following sections provide guidance to shipmasters in the use of pesticides[3] with a view to safety of personnel and to avoid excessive residues of toxic agents in human and animal food chain. They cover pesticides used for the control of insect[4] and rodent pests in empty and loaded cargo spaces, in crew and passenger accommodation and in food stores. Account has been taken of existing recommendations of the World Health Organization (WHO), the International Labour Office (ILO), and the Food and Agriculture Organization of the United Nations (FAO) in regard to pesticide residues and occupational safety.

---

* References to human and animal food include both raw and processed materials.

3 The word *pesticide* as used throughout the text means insecticides, fumigants and rodenticides.

4 The word *insect* as used throughout the text includes mites.

2 Prevention of infestation

2.1 *Maintenance and sanitation*

2.1.1 Ship cargo spaces, tank top ceilings and other parts of the ship should be kept in a good state of repair to avoid infestation. Many ports of the world have rules and by-laws dealing specifically with the maintenance of ships intended to carry grain cargoes; for example, boards and ceilings should be completely grain-tight.

2.1.2 Cleanliness, or good housekeeping, is as important a means of controlling pests on a ship as it is in a home, warehouse, mill or factory. Since insect pests on ships become established and multiply in debris, much can be done to prevent their increase by simple, thorough cleaning. Box beams and stiffeners, for example, become filled with debris during discharge of cargo and unless kept clean can become a source of heavy infestation. It is important to remove *thoroughly* all cargo residue from deckhead frames and longitudinal deck girders at the time of discharge, preferably when the cargo level is suitable for convenient cleaning. Where available, industrial vacuum cleaners are of value for the cleaning of cargo spaces and fittings.

2.1.3 The material collected during cleaning should be disposed of, or treated, immediately so that the insects cannot escape and spread to other parts of the ship or elsewhere. In port it may be burnt or treated with a pesticide, but in many countries such material may only be landed under phytosanitary supervision. Where destruction ashore is not practicable, the sweepings should be jettisoned well out to sea. If any part of the ship is being fumigated the material may be left exposed to the gas.

2.2 *Main sites of infestation*

2.2.1 *Tank top ceiling:* If, as often happens, cracks appear between the ceiling boards, food material may be forced down into the underlying space and serve as a focus of infestation for an indefinite period. Insects bred in this space can readily move out to attack food cargoes and establish their progeny in them.

2.2.2 *'Tween-deck centre lines, wooden feeders* and bins are often left in place for several voyages and because of their construction are a frequent source of infestation. After unloading a grain cargo, burlap and battens covering the narrow spaces between the planks should be removed and discarded before the holds are cleaned or washed down. These coverings should be replaced by new material in preparation for the next cargo.

2.2.3 *Transverse beams and longitudinal deck girders* which support the decks and hatch openings may have an L-shaped angle-bar construction. Such girders provide ledges where grain may lodge when bulk cargoes are unloaded. The ledges are often in inaccessible places overlooked during cleaning operations.

2.2.4 *Insulated bulkheads near engine-rooms:* When the hold side of an engine-room bulkhead is insulated with a wooden sheathing, the airspace and the cracks between the boards often become filled with grain and other material. Sometimes the airspace is filled with insulating material which may become heavily infested and serves as a place for insect breeding. Temporary wooden bulkheads also provide an ideal place for insect breeding, especially under moist conditions, such as when green lumber is used.

2.2.5 *Cargo battens:* The crevices at the sparring cleats are ideal places for material to lodge and for insects to hide.

2.2.6 *Bilges:* Insects in accumulations of food material are often found in these spaces.

2.2.7 *Electrical conduit casings:* Sometimes the sheet-metal covering is dam„aged by general cargo and when bulk grain is loaded later, the casings may become completely filled. This residual grain has often been found to be heavily infested. Casings that are damaged should be repaired immediately or, where possible, they should be replaced with steel strapping, which can be cleaned more easily.

2.2.8 Other places where material accumulates and where insects breed and hide include:

The area underneath burlap, which is used to cover limber boards and sometimes to cover tank top ceilings.

Boxing around pipes, especially if it is broken.

Corners, where old cereal material is often found.

Crevices at plate landings, frames and chocks.

Wooden coverings of manholes or wells leading to double-bottom tanks or other places.

Cracks in the wooden ceiling protecting the propeller shaft tunnel.

Beneath rusty scale and old paint on the inside of hull plates.

Shifting boards.

Dunnage material, empty bags and used separation cloths.

Inside lockers.

3 Chemical control of insect infestation

3.1 *Methods of chemical disinfestations*

3.1.1 *Types of pesticides and methods of insect control*

3.1.1.1 To avoid insect populations becoming firmly established in cargo spaces and other parts of a ship, it is necessary to use some form of chemical toxicant for control. The materials available may be divided conveniently into two classes: contact insecticides and fumigants. The choice of agent and method of application depend on the type of commodity, the extent and location of the infestation, the importance and habits of the insects found, and the climatic and other conditions. Recommended treatments are altered or modified from time to time in accordance with new developments.

3.1.1.2 The success of chemical treatments does not lie wholly in the pesticidal activity of the agents used. In addition, an appreciation of the requirements and limitations of the different available methods is required. Crew members can carry out small-scale or "spot" treatments if they adhere to the manufacturer's instructions and take care to cover the whole area of infestation. However, extensive or hazardous treatments including fumigation and spraying near human and animal food should be placed in the hands of professional operators, who should inform the master of the identity of the active ingredients used, the hazards involved and the precautions to be taken.

3.1.2 ***Contact insecticides***

3.1.2.1 *Space treatments:* Insecticides may be discharged into the air as fine particles of liquid or solid. There are a number of types of equipment for producing and distributing such particles. This method of treatment kills flying insects and deals with superficial infestation where exposed insects come into contact with the particles, whilst there may be a limited residual pesticidal effect on surfaces on which the particles settle.

3.1.2.2 For use in cargo spaces, space sprays and fogs can be produced in several different ways. These include fog generators in which an insecticide in the form of a liquid or coarse spray is vaporized. Such vaporized insecticides may condense into fine particles on reaching cool air. Alternatively, fine particles may be produced mechanically from suitable formulations by dispersing nozzles, venturi systems or centrifugal force. Insecticidal smokes are evolved from generators simply by igniting the material and such generators are a convenient form of application for use by ships' personnel.

3.1.2.3 Tests have shown that these insecticidal smokes and sprays can be very effective against insects moving freely in the open, in spaces such as holds. However, no appreciable penetration or control of insects can be obtained in deep crevices, or between or under deck boards, tank top ceilings and limber boards, places where infestation commonly occurs. Where insects are deep-seated, it is usually necessary to use a fumigant.

3.1.2.4 *Surface sprays:* Spraying with a suitable insecticide can also be used to control residual infestation. Within the limitations of the technique this is a convenient way to control insects as it does not require evacuation of spaces not being treated. Various formulations are available:

.1 emulsifiable concentrates and water-dispersible powder concentrates for dilution with water; and

.2 oil concentrates for dilution with a suitable carrier oil and, for small-scale use, ready-to-use formulations, usually in a light oil.

3.1.2.5 Hand-operated or mechanically operated sprayers may be used according to the size of the job to be done. To reach the heights of some ships' holds, power equipment is required which will develop enough pressure to get the spray material where it is needed. Hand sprayers are rarely adequate: "knapsack" sprayers which develop enough pressure to reach infested areas may be used. Such surface sprays produce a deposit toxic to insects present at the time and also to those that subsequently crawl over or settle on treated surfaces.

3.1.2.6 As with fogging, a disadvantage of spraying is that the insecticide does not kill insects hidden in inaccessible parts of cargo spaces. Insecticidal sprays applied in oil solutions or water emulsions take some time to dry and may be hazardous to persons moving about the ship. No cargo should be loaded until spray deposits have dried.

3.1.2.7 In addition to the methods described above, insecticidal lacquers may be painted on to boundary junctures in accommodation and galley areas in accordance with the manufacturers' instructions, to provide control of pests. Hand sprayers and hand-held aerosols may also be effective in these areas.

3.1.2.8 During the application of contact insecticides by any method, all personnel not directly involved should be evacuated from the areas being treated for a period of time not less than that recommended by the manufacturer of the specific pesticide used on the label or package itself.

3.1.3 *Fumigants*

3.1.3.1 Fumigants are used where contact insecticides will not give control. Fumigants act in a gaseous phase even though they may be applied as solid or liquid formulations from which the gas arises. Effective and safe use requires that the space being treated be rendered gastight for the period of exposure, which may vary from a few hours to several days, depending on the fumigant type and concentration used, the pests, the commodities treated and the temperature. Additional information is provided on two of the most widely used fumigants, methyl bromide and phosphine (hydrogen phosphide), in annex 1 (D).

3.1.3.2 Since fumigant gases are poisonous to humans and require special equipment and skills in application, they should be used by specialists and not by the ship's crew.

3.1.3.3 Evacuation of the space under gas treatment is mandatory and in some cases it will be necessary for the whole ship to be evacuated (see 3.4.2 and 3.4.3 below).

3.1.3.4 A "fumigator-in-charge" should be designated by the fumigation company, government agency or appropriate authority. He should be able to provide documentation to the master proving his competence and authorization. The master should be provided with written instructions by the fumigator-in-charge on the type of fumigant used, the hazards involved, the threshold limit values (TLV)[5] and the precautions to be taken, and in view of the highly toxic nature of all commonly used fumigants these should be followed carefully. Such instructions should be written in a language readily understood by the master or his representative.

3.2 *Disinfestation of empty cargo spaces*

3.2.1 An empty cargo space may be treated by any of the methods described, excepting the use of insecticidal lacquers. Care should be taken to avoid contamination and taint to subsequent cargoes. Examples of some commonly used pesticides are listed in annex 1. (For precautions before, during and after fumigation of cargo spaces see 3.4 below.)

[5] For definition of *threshold limit value* (TLV) see annex 2.

3.3 ***Disinfestation of food stores, galleys and crew and passenger accommodation***

3.3.1 In general, only those insecticides suitable for use in cargo spaces should be used in dry-food stores in ships. A wider range of insecticides may be needed for treatments in galleys and in passenger and crew accommodation, especially against pests such as cockroaches, ants, flies and bedbugs. Examples of some commonly used pesticides are listed in annex 1.

3.4 ***Disinfestation of cargoes and surrounds***

3.4.1 ***Fumigation of cargo spaces and cargoes***

3.4.1.1 Apart from space and surface treatments with contact pesticides, the principal method of treatment of cargo spaces or their contents for the control of insects is by fumigation.

3.4.2 ***Fumigation with aeration (ventilation) in port***

3.4.2.1 Fumigation and aeration (ventilation) of empty cargo spaces should always be carried out in port (alongside or at anchorage). Ships should not be permitted to leave port until gas-free certification has been received from the fumigator-in-charge.

3.4.2.2 Prior to the application of fumigants to cargo spaces, the crew should be landed and remain ashore until the ship is certified "gas-free", in writing, by the fumigator-in-charge or other authorized person. During this period a watchman should be posted to prevent unauthorized boarding or entry, and warning signs[6] should be prominently displayed at gangways and at entrances to accommodation.

3.4.2.3 The fumigator-in-charge should be retained throughout the fumigation period and until such time as the ship is declared gas-free.

3.4.2.4 At the end of the fumigation period the fumigator will take the necessary action to ensure that the fumigant is dispersed. If crew members are required to assist in such actions, for example in opening hatches, they should be provided with adequate respiratory protection and adhere strictly to instructions given by the fumigator-in-charge.

3.4.2.5 The fumigator-in-charge should notify the master in writing of any spaces determined to be safe for re-occupancy by essential crew members prior to the aeration of the ship.

3.4.2.6 In such circumstances the fumigator-in-charge should monitor, throughout the fumigation and aeration periods, spaces to which personnel have been permitted to return, to ensure that the TLV for the fumigant is not exceeded. Should the concentration in any such area exceed the TLV, crew members should wear adequate respiratory protection or should be evacuated from the area until measurements show re-occupancy to be safe.

---

[6] A specimen of such a warning sign is given in annex 3.

3.4.2.7 No unauthorized persons should be allowed on board until all parts of the ship have been determined gas-free, warning signs removed and clearance certificates issued by the fumigator-in-charge.

3.4.2.8 Clearance certificates should only be issued when tests show that all residual fumigant has been dispersed from empty cargo spaces and adjacent working spaces and any residual fumigant material has been removed.

3.4.2.9 Entry into a space under fumigation should never take place except in the event of an extreme emergency. If entry is imperative the fumigator-in-charge and at least one other person should enter, each wearing adequate protective equipment appropriate for the fumigant used and a safety harness and lifeline. Each lifeline should be tended by a person outside the space, who should be similarly equipped.

3.4.2.10 If a clearance certificate cannot be issued after the fumigation of cargo in port, the provisions of 3.4.3 should apply.

3.4.3 ***Fumigation continued in transit***

3.4.3.1 Fumigation in transit should only be carried out at the discretion of the master. This should be clearly understood by owners, charterers, and all other parties involved when considering the transport of cargoes that may be infested. Due consideration should be taken of this when assessing the options of fumigation. The master should be aware of the regulations of the flag State Administration with regard to in-transit fumigation. The application of the process should be with the agreement of the port State Administration. The process may be considered under two headings:

.1 fumigation in which treatment is intentionally continued in a sealed space during a voyage and in which no aeration has taken place before sailing; and

.2 in-port cargo fumigation where some aeration is carried out before sailing, but where a clearance certificate for the cargo space(s) cannot be issued because of residual gas and the cargo space(s) has been re-sealed before sailing.

3.4.3.2 Before a decision on sailing with a fumigated cargo is made it should be taken into account that, due to operational conditions, the circumstances outlined in 3.4.3.1.2 may arise unintentionally, e.g. a ship may be required to sail at a time earlier than anticipated when the fumigation was started. In such circumstances the potential hazards may be as great as with a planned in-transit fumigation and all the precautions in the following paragraphs should be observed.

3.4.3.3 Before a decision is made as to whether a fumigation treatment planned to be commenced in port and continued at sea should be carried out, special precautions are necessary. These include the following:

.1 at least two members of the crew (including one officer) who have received appropriate training (see 3.4.3.6) should be designated as the trained representatives of the master responsible for ensuring that safe conditions in accommodation, engine-room and other working spaces are maintained after the

fumigator-in-charge has handed over that responsibility to the master (see 3.4.3.12); and

.2 the trained representatives of the master should brief the crew before a fumigation takes place and satisfy the fumigator-in-charge that this has been done.

3.4.3.4 Empty cargo spaces are to be inspected and/or tested for leakage with instruments so that proper sealing can be done before or after loading. The fumigator-in-charge, accompanied by a trained representative of the master or a competent person, should determine whether the cargo spaces to be treated are or can be made sufficiently gastight to prevent leakage of the fumigant to the accommodation, engine-rooms and other working spaces in the ship. Special attention should be paid to potential problem areas such as bilge and cargo line systems. On completion of such inspection and/or test, the fumigator-in-charge should supply to the master for his retention a signed statement that the inspection and/or test has been performed, what provisions have been made and that the cargo spaces are or can be made satisfactory for fumigation. Whenever a cargo space is found not to be sufficiently gastight, the fumigator-in-charge should issue a signed statement to the master and the other parties involved.

3.4.3.5 Accommodation, engine-rooms, areas designated for use in navigation of the ship, frequently visited working areas and stores, such as the forecastle head spaces, adjacent to cargo spaces being subject to fumigation in transit should be treated in accordance with the provisions of 3.4.3.13. Special attention should be paid to gas concentration safety checks in problem areas referred to in 3.4.3.4.

3.4.3.6 The trained representatives of the master designated in 3.4.3.3 should be provided and be familiar with:

.1 the information in the relevant Material Safety Data Sheet, if available; and

.2 the instructions on the fumigant label or package itself, such as the recommendations of the fumigant manufacturer concerning methods of detection of the fumigant in air, its behaviour and hazardous properties, symptoms of poisoning, relevant first aid and special medical treatment and emergency procedures.

3.4.3.7 The ship should carry:

.1 gas-detection equipment and adequate fresh supplies of service items for the fumigant(s) concerned as required by 3.4.3.12, together with instructions for its use and the TLVs for safe working conditions;

.2 instructions on disposal of residual fumigant material;

.3 at least four sets of adequate respiratory protective equipment appropriate for the fumigant used;

.4 the necessary medicines and medical equipment; and

.5 a copy of the latest version of the Medical First Aid Guide for Use in Accidents Involving Dangerous Goods (MFAG).

3.4.3.8 The fumigator-in-charge should notify the master in writing of the spaces containing the cargo to be fumigated and also of any other spaces that are considered unsafe to enter during the fumigation. During the application of the fumigant the fumigator-in-charge should ensure that the surrounding areas are checked for safety.

3.4.3.9 If cargo spaces containing cargo are to be fumigated in transit:

.1 After application of the fumigant, an initial check should be made by the fumigator-in-charge together with trained representatives of the master for any leak which, if detected, should be effectively sealed. When the master is satisfied that all precautions detailed in 3.4.3.1 to 3.4.3.12 have been fulfilled (refer to model checklist in annex 4) then the vessel may sail. Otherwise, provisions outlined in 3.4.3.9.2 or 3.4.3.9.3 are to be followed.

If the provisions of 3.4.3.9.1 are not satisfied,

either:

.2 After application of fumigants, the ship should be delayed in port alongside at a suitable berth or at anchorage for such a period as to allow the gas in the fumigated cargo spaces to reach sufficiently high concentrations to detect any possible leakage. Special attention should be paid to those cases where fumigants in a solid or liquid form have been applied which may require a long period (normally from 4 to 7 days unless a recirculation or similar distribution system is used) to reach such a high concentration that leakages can be detected. If leakages are detected, the ship should not sail until the source(s) of such leakages are determined and eliminated. After ascertaining that the ship is in a safe condition to sail, i.e. no gas leakages are present, the fumigator-in-charge should furnish the master with a written statement that:

.2.1 the gas in the cargo space(s) has reached sufficiently high concentrations to detect any possible leakages;

.2.2 spaces adjacent to the treated cargo space(s) have been checked and found gas-free; and

.2.3 the ship's representative is fully conversant with the use of the gas-detection equipment provided.

or:

.3 After application of the fumigants and immediately after the sailing of the ship, the fumigator-in-charge should remain on board for such a period as to allow the gas in the fumigated cargo space or spaces to reach sufficiently high concentrations to detect any possible leakage, or until the fumigated cargo is discharged (see 3.4.3.20), whichever is the shorter, to check and rectify any gas leakages. Prior to his leaving the ship, he should ascertain that the ship is in a safe condition, i.e. no gas leakages are present, and he should furnish the master with a

written statement to the effect that the provisions of'3.4.3.9.2.1, 3.4.3.9.2.2 and 3.4.3.9.2.3 have been carried out.

3.4.3.10 On application of the fumigant, the fumigator-in-charge should post warning signs at all entrances to places notified to the master as in 3.4.3.8. These warning signs should indicate the identity of the fumigant and the date and time of fumigation*.

3.4.3.11 At an appropriate time after application of the fumigant, the fumigator-in-charge, accompanied by a representative of the master, should check that accommodation, engine-rooms and other working spaces remain free of harmful concentrations of gas.

3.4.3.12 Upon discharging his agreed responsibilities, the fumigator-in-charge should formally hand over to the master in writing responsibility for maintaining safe conditions in all occupied spaces. The fumigator-in-charge should ensure that gas-detection and respiratory protection equipment carried on the ship is in good order, and that adequate fresh supplies of consumable items are available to allow sampling as required in 3.4.3.13.

3.4.3.13 Gas concentration safety checks at all appropriate locations, which should at least include the spaces indicated in 3.4.3.5, should be continued throughout the voyage at least at eight-hour intervals or more frequently if so advised by the fumigator-in-charge. These readings should be recorded in the ship's logbook.

3.4.3.14 Except in extreme emergency, cargo spaces sealed for fumigation in transit should never be opened at sea or entered. If entry is imperative, at least two persons should enter, wearing adequate protection equipment and a safety harness and lifeline tended by a person outside the space, similarly equipped with protective, self-contained breathing apparatus.

3.4.3.15 If it is essential to ventilate a cargo space or spaces, every effort should be made to prevent a fumigant from accumulating in accommodation or working areas. Those spaces should be carefully checked to that effect. If the gas concentration in those areas at any time exceeds the TLV they should be evacuated and the cargo space or cargo spaces should be re-sealed. If a cargo space is re-sealed after ventilation it should not be assumed that it is completely clear of gas and tests should be made and appropriate precautions taken before entering.

3.4.3.16 Prior to the arrival of the ship, generally not less than 24 hours in advance, the master should inform the appropriate authorities of the country of destination and ports of call that fumigation in transit is being carried out. The information should include the type of fumigant used, the date of fumigation, the cargo spaces which have been fumigated, and whether ventilation has commenced. Upon arrival at the port of discharge, the master should also provide information as required in 3.4.3.6.2 and 3.4.3.7.2.

* A specimen of such a warning sign is given in annex 3.

3.4.3.17 On arrival at the port of discharge, the requirements of receiving countries regarding handling of fumigated cargoes should be established. Before entry of fumigated cargo spaces, trained personnel from a fumigation company or other authorized persons, wearing respiratory protection, should carry out careful monitoring of the spaces to ensure the safety of personnel. The monitored values should be recorded in the ship's log-book. In case of need or emergency the master may commence ventilation of the fumigated cargo spaces under the conditions of 3.4.3.15, having due regard for the safety of personnel on board. If this operation is to be done at sea, the master should evaluate weather and sea conditions before proceeding.

3.4.3.18 Only mechanical unloading that does not necessitate entry of personnel into the cargo spaces of such fumigated cargoes should be undertaken. However, when the presence of personnel in cargo spaces is necessary for the handling and operation of unloading equipment, continuous monitoring of the fumigated spaces should be carried out to ensure the safety of the personnel involved. When necessary, these personnel should be equipped with adequate respiratory protection.

3.4.3.19 During the final stages of discharge, when it becomes necessary for personnel to enter the cargo spaces, such entry should only be permitted subsequent to verification that such cargo spaces are gas-free.

3.4.3.20 Upon completion of discharge and when the ship is found free of fumigants and certified as such, all warning signs should be removed. Any action in this respect should be recorded in the ship's logbook.

3.5 Carriage of fumigated freight containers, barges and other cargo transport units on a ship

3.5.1 *Loaded without ventilation after fumigation*

3.5.1.1 If it is intended that freight containers, barges or cargo transport units containing cargo under fumigation should be taken on board ship without preliminary ventilation, their shipment must be considered as a Class 9 Hazard under the IMDG Code and as such the procedures should conform to the provisions as specified in the entries for FUMIGATED UNIT (UN 3359) of the Code. The following special precautions, incorporating the IMDG provisions, are necessary:

.1 A freight container, barge or cargo transport unit containing cargo under fumigation should not be allowed on board until sufficient time has elapsed to allow the attainment of a reasonably uniform gas concentration throughout the cargo. Because of variations due to types and amounts of fumigants and commodities and temperature levels, it is recommended that the period to elapse between fumigant application and loading should be determined locally for each country. Twenty-four hours is normally adequate for this purpose.

.2 The master should be informed prior to loading of freight containers, barges and cargo transport units under fumigation. These should be identified with suitable warning signs* incorporating the identity of the fumigant and the date and time of

* A specimen of such a warning sign is given in annex 3.

fumigation. Any freight container under fumigation must have the doors substantially secured before loading onto a ship. Plastic or lightweight metal seals are not sufficient for this purpose. The securing arrangement must be such as to allow only authorized entry to the freight container. If container doors are to be locked, the means of locking should be of such a construction that, in case of emergency, the doors could be opened without delay. Adequate instructions for disposal of any residual fumigant material should be provided.

.3 Shipping documents for freight containers, barges or cargo transport units concerned should show the date of fumigation and the type and amount of fumigant used.

.4 Stowage *on deck* should be at least 6 m away from vent intakes, crew quarters and regularly occupied spaces.

.5 Stowage *under deck* should only be undertaken when unavoidable and then in a cargo space equipped with mechanical ventilation sufficient to prevent the build-up of fumigant concentrations above the TLV. The ventilation rate of the mechanical ventilation system should be at least two air changes per hour, based on the empty cargo space. The provisions of 3.4.3.13 should apply.

.6 Equipment suitable for detecting the fumigant gas or gases used should be carried on the ship, with instructions for its use.

.7 Where the stowage requirements in 3.5.1.1.5 cannot be met, cargo spaces carrying fumigated freight containers, barges or cargo transport units should be treated as if under fumigation and the provisions of 3.4.3.3 to 3.4.3.13 should apply.

3.5.1.2 Prior to the arrival of the ship, generally not less than 24 hours in advance, the master should inform the appropriate authorities of the country of destination and ports of call that fumigation in transit is being carried out. The information should include the type of fumigant used, the date of fumigation and cargo spaces carrying fumigated freight containers, barges or cargo transport units. Upon arrival at the port of discharge, the master should also provide information as required in 3.4.3.6.2 and 3.4.3.7.2.

3.5.2 ***Fumigated freight containers, barges or other cargo transport units ventilated before loading***

3.5.2.1 Freight containers, barges or cargo transport units that have been ventilated after fumigation to ensure that no harmful concentration of gas remains should have the warning signs removed and, whether empty or loaded, may be taken on board a ship without the precautions in 3.5.1.1.1 to 3.5.1.1.7.

3.5.3 ***Fumigation after loading on board a ship***

3.5.3.1 No person should fumigate the contents of a freight container, barge or cargo transport unit once it has been loaded on board a ship.

4 Control of rodent pests

4.1 *General*

4.1.1 In regard to rodent control, ships are subject to the provisions of the WHO's International Health Regulations.

4.1.2 Rodents may be controlled by fumigation, by the use of a bait incorporating a poison which acts within a few minutes (*acute poison*) or one which acts over a period (*chronic poison*), or by trapping.

4.2 *Fumigation and baiting*

4.2.1 Fumigation against rodents is normally done at dosages and periods of exposure much less than those required for insect control. It follows that an insect fumigation also controls rodents in areas that are treated. However, rodent control often requires fumigation of accommodation and working spaces that may not normally be treated for insect control.

4.2.2 Fumigation against rodents alone should be undertaken in port and ventilation completed in port. The precautions in 3.4.2 should be observed.

4.2.3 Methods involving fumigation or the use of acute poisons should be employed only by qualified personnel of pest control servicing firms or appropriate authorities (e.g. port health authorities). Baits containing acute poisons should be collected and disposed of by such personnel when the treatment is completed. Chronic poisons should be used strictly in accordance with the manufacturer's instructions contained on the label or on the package itself.

4.3 ***Rodent baits*** (Chronic poisons permitted for use by ship's personnel)

4.3.1 Careless use may cause injury to ship's personnel.

4.3.2 For rodenticides to be efficient, they should be placed where the rodents are moving. Runways are usually detected by evidence of marking, debris and dirt. The use of rodenticides, however, is no substitute for high standards of hygiene and the rodent-proofing of equipment whenever possible.

4.3.2.1 Baits should be protected from accidental consumption by humans or domestic animals and from contact with human and animal food.

4.3.2.2 Where practicable, cereal baits should be replaced within 30 days to avoid providing a source of insect infestation.

4.3.3 A record should be kept of the locations in which baits are set, particular care being taken to search for and remove all baits from cargo spaces prior to the loading of bulk foodstuffs and livestock cargoes.

5 Regulations for the use of pesticides

5.1 *National and international controls on pesticide usage*

5.1.1 In many countries the sale and use of pesticides are regulated by governments to ensure safety in application and prevention of contamination of foodstuffs. Among the factors taken into account in such regulations are the recommendations made by international organizations such as FAO and WHO, especially in regard to maximum limits of pesticide residues in food and foodstuffs.

5.1.2 Examples of some commonly used pesticides are listed in annex 1. Pesticides should be used strictly in accordance with the manufacturer's instructions as given on the label or package itself. National regulations and requirements vary from one country to another; therefore particular pesticides which may be used for treatment of cargo spaces and accommodation in ships may be limited by the regulations and requirements of:

.1 the country where the cargo is loaded or treated;

.2 the country of destination of the cargo, especially in regard to pesticide residues in foodstuffs; and

.3 the country of registration of the ship.

5.1.3 Ships' masters should ensure that they have the necessary knowledge of the above regulations and requirements.

6 Safety precautions - general

6.1 *Pesticide materials*

6.1.1 Pesticides are often at least as poisonous to humans as to the pests against which they are used. The instructions given on the label or package itself, particularly those relating to safety and disposal of residual material, should be strictly followed.

6.1.2 Pesticides should be stored in strict compliance with national regulations and requirements or the manufacturer's instructions.

6.1.3 Smoking, eating or drinking while using pesticides should always be avoided.

6.1.4 Empty pesticide receptacles and packaging should never be re-used.

6.1.5 Hands should always be washed after applying pesticides.

6.2 *Space and surface spraying* (See also 3.1.2)

6.2.1 When spraying is being carried out by professional operators they are responsible for taking the necessary safety precautions. If operations are carried out by the crew, the master should ensure that the following safeguards are observed, both in the preparation and the application of the pesticides:

.1 wear protective clothing, gloves, respirators and eye protection appropriate to the pesticides being used;

.2 do not remove clothes, gloves, respirators or eye protection whilst applying pesticides, even under hot conditions; and

.3 avoid excessive application and run-off on surfaces and avoid contamination of foodstuffs.

6.2.2 If clothing becomes contaminated:

.1 stop work immediately and leave the area;

.2 remove clothing and footwear;

.3 take a shower and wash skin thoroughly;

.4 wash clothing and footwear, and wash skin again; and

.5 seek medical advice.

6.2.3 After work:

.1 remove and wash clothing, footwear and other equipment; and

.2 take a shower, using plenty of soap.

6.3 Fumigation

6.3.1 Ships personnel should not handle fumigants and such operations should be carried out only by qualified operators. Personnel allowed to remain in the vicinity of a fumigation operation for a particular purpose should follow the instructions of the fumigator-in-charge implicitly.

6.3.2 Aeration of treated cargo spaces should be completed and a clearance certificate issued as in 3.4.2.8 or 3.4.2.10 before personnel are permitted to enter.

6.4 *Contact insecticides in the cargo space, admixture with raw grain*

6.4.1 When a contact insecticide is to be applied to grain during the loading of a ship, the master should be provided by the grain contractors with written instructions on the type and amount of insecticide used and on the precautions to be taken. Ship's personnel and those unloading cargo should not enter cargo spaces containing treated grains without taking general safety precautions as provided by the manufacturer of the insecticide.

6.5 *Exposure to pesticides resulting in illness*

6.5.1 In the case of exposure to pesticides and subsequent illness, medical advice should be sought immediately. Information on poisoning by specific compounds may be found in the Medical First Aid Guide for Use in *Accidents Involving Dangerous Goods (MFAG)* or on the package (manufacturer's instructions and safety precautions on the label or the package itself).

ANNEX 1

PESTICIDES SUITABLE FOR SHIPBOARD USE

The materials listed should be used strictly in accordance with the manufacturer's instructions and safety precautions given on the label or package itself, especially in respect of flammability, and with regard to any further limitations applied by the law of the country of loading, destination or flag of the ship, contracts relating to the cargo, or the shipowners instructions.

Materials may be used by ship's personnel unless the contrary is indicated. A space-application insecticide may be used in conjunction with a residual insecticide.

It should be especially noted that some materials listed may taint sensitive commodities, e.g. coffee and cocoa, and special care should be taken when stowing these commodities in order to prevent this. The reason for naming purified grades in the list below is to minimize tainting.

A Contact insecticides in a cargo space

A1 *Fast-acting insecticides for space application, e.g. against flying insects:*

Pyrethrins (with or without synergist)

Bioresmethrin

Dichlorvos

A2 *Slower-acting residual insecticides for surface application:*

Malathion (premium grade)

Bromophos

Carbaryl

Fenitrothion

Chlorpyriphos-methyl

Pirimiphos-methyl

B Contact insecticides and baits in accommodation

B1 *Fast-acting insecticides for space application, e.g. against flying insects:*

Pyrethrins (with or without synergist)

Bioresmethrin

Dichlorvos

B2 *Slower-acting residual pesticides:*

Malathion (premium grade)
Diazinon
Fenitrothion
Propoxur
Pirimiphos-methyl
Chlorpyriphos-ethyl
Chlorpyriphos-methyl
Bendiocarb
Permethrin

B3 *Insecticides for use against particular pests and as an additional treatment:*

Diazinon, as an aerosol spray or lacquer against ants, cockroaches and flies
Dieldrin and Aldrin, in lacquers for control of ants and cockroaches
Methoprene bait, for control of Pharoah's ants
Chlorpyriphos-ethyl, as a bait and as a lacquer

C Rodenticides

C1 *Chronic poisons in baits:*

Calciferol
Any anticoagulant in the following two classes:
Hydroxycoumarins (e.g. Warfarin, Fumarin, Coumatetralyl, Difenacoum, Brodifacoum)
Indanediones (e.g. Pival, Diphacinone, Chlorophacinone)

C2 *Acute poisons in baits or liquids:*

TO BE USED ONLY IN PORT AND BY QUALIFIED OPERATORS

Barium fluoroacetate
Fluoroacetamide
Sodium fluoroacetate
Zinc phosphide

D Fumigants

TO BE APPLIED ONLY BY QUALIFIED OPERATORS

Additional information on methyl bromide and phosphine (hydrogen phosphide) to be read in conjunction with 3.1.3

Methyl bromide
Methyl bromide is used in situations where a rapid treatment of commodities or space is required. It should not be used in spaces where ventilation systems are not adequate for the removal of all gases from the free space. **In-ship in-transit fumigations with methyl bromide should not be carried out.** Fumigation with methyl bromide should be permitted only when the ship is in the confines of a port (either at anchor or alongside) and to disinfest before discharge, once crew members have disembarked (see 3.1.3.3). Prior to discharge, ventilation must be done, forced if necessary, to reduce the gaseous residues below the TLV in the free spaces. (See procedures for ventilation in 3.4.3.17 to 3.4.3.19).

Phosphine (hydrogen phosphide)
A variety of phosphine-generating formulations are used for in-ship in-transit or at-berth fumigations. Application methods vary widely and include surface-only treatment, probing, perforated tubing laid at the bottom of spaces, recirculation systems and gas-injection systems or their combinations. Treatment times will vary considerably depending on the temperature, depth of cargo and on the application method used. **Clear written instructions must be given to the master of the ship, to the receiver of the cargo and to the authorities at the discharging port as to how any powdery residues are to be disposed of.** These will vary with each formulation and the method of application. Prior to discharge, ventilation must be done, forced if necessary, to reduce the gaseous residues below the TLV in the free spaces (see procedures for ventilation in 3.4.3.17 to 3.4.3.19). For safety aspects during the voyage see 3.4.3.3.

D1 *Fumigants against insects in empty cargo spaces and against rodents anywhere aboard ship:*

Carbon dioxide

Nitrogen

Methyl bromide and carbon dioxide mixture

Methyl bromide

Hydrogen cyanide

Phosphine (hydrogen phosphide)

D2 *Fumigants against insects in loaded or partially loaded cargo spaces:*

CARE IS NEEDED IN SELECTING TYPES AND AMOUNTS OF FUMIGANTS FOR TREATMENT OF PARTICULAR COMMODITIES

Carbon dioxide

Nitrogen

Methyl bromide and carbon dioxide mixture

Methyl bromide

Phosphine (hydrogen phosphide)

ANNEX 2

THRESHOLD LIMIT VALUES (TLV) FOR VAPOURS IN AIR

The threshold limit value (TLV) for a substance in air has been defined as the time-weighted average concentration for a normal eight-hour working day to which nearly all workers may be repeatedly exposed, day after day, without adverse effect. Certain fumigants, including dichlorvos, methyl bromide and hydrogen cyanide, have the ability to penetrate the intact skin and thus become absorbed into the body. In the case of ships at sea, it may be considered that personnel cannot be limited to eight hours' exposure in their particular environment in the course of each 24-hour period. However, these recommendations make clear that, in the event of excessive vapour concentrations being measured in any occupied space, steps should be taken to avoid unprotected respiration in that space and action initiated to vacate and ventilate the space. It should be emphasized that the registering of gas concentrations above the TLV in an occupied space arising from the use of fumigants on a ship should be an exceptional occurrence which would constitute the need for immediate countermeasures. In those circumstances, and in the absence of any alternative guidelines based on scientific principles, it is considered that the safe limits for the working environment accepted by a number of countries should be observed on ships.

The recommended levels* are as follows:

	TLV	
	ppm	**Mg/m³**
Dichlorvos†	0.1	0.9
Hydrogen cyanide†	10	11
Phosphine (Hydrogen phosphide)	0.3	0.4
Methyl bromide†	5	20

* The latest edition of the *Recommendations of the American Conference of Governmental Industrial Hygienists* or other appropriate national recommendations or regulations should be consulted.

† Materials absorbed through the skin.

ANNEX 3

FUMIGATION WARNING SIGN

The markings should be black print on a white background with lettering not less than 25 mm high.

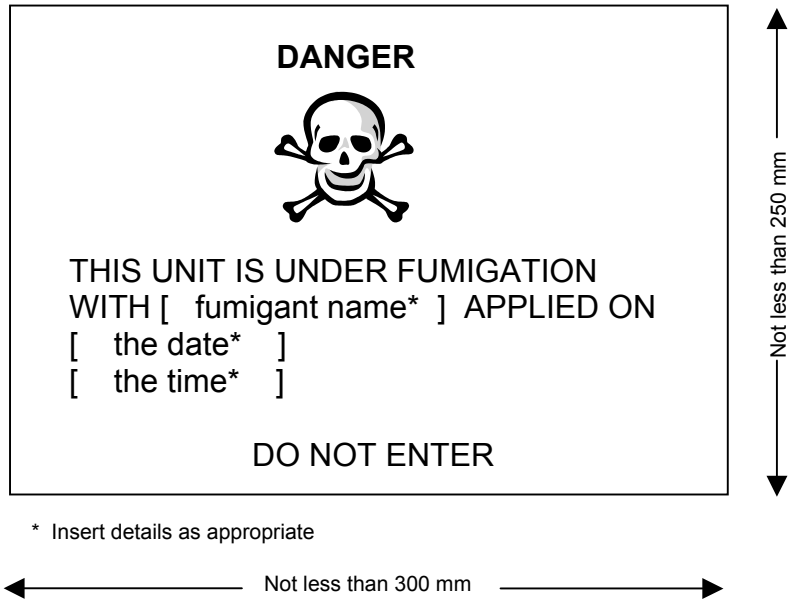

ANNEX 4

MODEL CHECKLIST FOR IN-TRANSIT FUMIGATION WITH PHOSPHINE

Date: . . . . . .

Port: . . . . . Terminal/Quay: . . . . . .

Ship's name: . . . . . .

Type of fumigant: . . . . . Method of application: . . . . . .

Date & time fumigation commenced: . . . . . .

Name of fumigator/company: . . . . . .

The master and fumigator-in-charge, or their representatives, should complete the checklist jointly. The purpose of this checklist is to ensure that the responsibilities and requirements of 3.4.3.11, and 3.4.3.12 are carried out fully for in-transit fumigation under section 3.4.3.9.

Safety of operations requires that all questions should be answered affirmatively by ticking the appropriate boxes. If this is not possible, the reason should be given and agreement reached upon precautions to be taken between ship and fumigator-in-charge. If a question is considered to be not applicable, write "n/a", explaining why if appropriate.

PART A: BEFORE FUMIGATION

		SHIP	FUMIGATOR-IN-CHARGE
1	The inspection required before loading has been performed (3.4.3.4)	☐	☐
2	All the cargo spaces to be fumigated are satisfactory for fumigation	☐	☐
3	Spaces, where found not be satisfactory, have been sealed	☐	☐
4	The master or his trained representatives have been made aware of the specific areas to be checked for gas concentrations throughout the fumigation period	☐	☐
5	The master or his trained representatives have been made familiar with the fumigant label, detection methods, safety procedures and emergency procedures (refer to 3.4.3.6)	☐	☐
6	The fumigator-in-charge has ensured that gas-detection and respiratory protection equipment carried on the ship is in good order, and that adequate fresh supplies of consumable items for this equipment are available to allow sampling as required by 3.4.3.13.	☐	☐
7	The master has been notified in writing of: (a) the spaces containing cargo to be fumigated (b) any other spaces that are considered unsafe to enter during the fumigation	☐	☐

PART B: AFTER FUMIGATION

The following procedure should be carried out after application of fumigant and closing and sealing of cargo spaces.

		SHIP	FUMIGATOR-IN-CHARGE
8	Presence of gas has been confirmed inside each hold under fumigation	☐	☐
9	Each hold has been checked for leakage and sealed properly	☐	☐
10	Spaces adjacent to the treated cargo spaces have been checked and found gas-free	☐	☐
11	The responsible crew members have been shown how to take gas readings properly when gas is present and they are fully conversant with the use of gas-detection equipment provided	☐	☐
12	Methods of application:		
	(a) *Surface application method* Initial rapid build-up of the gas in the upper regions of hold airspace with subsequent penetration downward of the gas over a longer period	☐	☐
	or		
	(b) *Deep probing* More rapid dispersion of gas than in (a) with lower concentrations in upper regions of airspace in the hold	☐	☐
	or		
	(c) *Recirculation* Rapid dispersion of gas throughout hold but at lower initial gas levels with subsequent build-up of gas levels which, however, may be lower due to even distribution	☐	☐
	or		
	(d) *Other*	☐	☐
13	The master or trained representatives have been briefed fully on the method of application and the spread of the gas throughout the hold	☐	☐
14	The master or trained representatives have been made:	☐	☐
	(a) aware that even though the initial check may not indicate any leaks, it is essential that monitoring is to be continued in the accommodation, engine-room, etc. because gas concentrations may reach their highest levels after several days	☐	☐
	(b) aware of the possibility of the spreading of gas throughout the duct keel and/or ballast tanks	☐	☐
15	The fumigator-in-charge has supplied a signed statement to the master conforming to the requirements of 3.4.3.12 for his retention	☐	☐

The above has been agreed:

Time: . . . . . Date: . . . . . .

For ship: . . . . . Fumigator-in-charge: . . . . . .

Rank: . . . . . .

APPENDIX 9

INDEX OF SOLID BULK CARGOES

1 This appendix lists cargoes, known at the time of publication to be carried in bulk, and the hazard identification groups to which they have been assigned. Furthermore it contains known alternative names. It should be noted that this list is not exhaustive and that the attributed physical properties are for guidance only.

1.1 The group identifications A, B and C have the same meaning as defined in section 1 of this Code.

1.2 A cargo attributed to more than one group is an indication that the cargo may exhibit properties of more than one group. E.g.

A or B means the cargo may exhibit properties of either group.
A and B means the cargo may exhibit the properties of both groups.
(A and B) or B means that the cargo may exhibit properties of both groups or only one group.

1.3 In the index, the Bulk Cargo Shipping Names (BCSN) are distinguished by entries written in capitals, followed by Group.

Names in lower case are alternative names, reference is then made to the proper Bulk Cargo Shipping Name.

Where mineral concentrates are concerned, the individual names will refer to the generic entry.

INDEX

BULK CARGO SHIPPING NAME	GROUP	REFERENCES
ALFALFA	C	
ALUMINA	C	
ALUMINA, CALCINED	C	
ALUMINA, SILICA	C	
ALUMINA SILICA, PELLETS	C	
ALUMINIUM FERROSILICON POWDER	B	
ALUMINIUM NITRATE, UN 1438	B	
Aluminium re-melting by-products	B	see ALUMINIUM SMELTING BY-PRODUCTS
ALUMINIUM SILICON POWDER, UNCOATED	B	
ALUMINIUM SMELTING BY-PRODUCTS	B	
AMMONIUM NITRATE, UN 1942	B	
AMMONIUM NITRATE BASED FERTILIZERS (Type A), UN 2067	B	
AMMONIUM NITRATE BASED FERTILIZERS (Type B), UN 2071	B	
AMMONIUM NITRATE, BASED FERTILIZERS (non-hazardous)	C	
AMMONIUM SULPHATE	C	
ANTIMONY ORE AND RESIDUE	C	
Antimony ore residue	C	See ANTIMONY ORE AND RESIDUE
Bakery materials	B or C	See SEED CAKE (Type a, b, c or d)
BARIUM NITRATE, UN 1446	B	
Barley malt pellets	B or C	See SEED CAKE (Type a, b, c or d)
BARYTES	C	
BAUXITE	C	
Beet, expelled or extracted	B or C	see SEED CAKE (Type a, b, c or d)
BIOSLUDGE	C	
Blende (zinc sulphide)	A	see ZINC CONCENTRATE
BORAX, anhydrous	C	
BORAX PENTAHYDRATE (crude or refined)	C	
Bran pellets	B or C	see SEED CAKE (Type a, b, c or d)
Brewer's grain pellets	B or C	see SEED CAKE (Type a, b, c or d)
BROWN COAL (LIGNITE) BRIQUETTES	B	
Calcined clay	C	see ALUMINA, CALCINED
Calcined pyrites	A and B	See PYRITES, CALCINED
Calcium fluoride	B	see FLUORSPAR
CALCIUM NITRATE, UN 1454	B	
CALCIUM NITRATE FERTILIZER	C	
Calcium oxide	B	see LIME (UNSLAKED)
Canola Pellets	B or C	see SEED CAKE (Type a, b, c or d)
CARBORUNDUM	C	
CASTOR BEANS, UN 2969	B	
CEMENT	C	
CEMENT CLINKERS	C	

BULK CARGO SHIPPING NAME	GROUP	REFERENCES
CEMENT COPPER	A	
Chalcopyrite	A	see COPPER CONCENTRATE
CHAMOTTE	C	
CHARCOAL	B	
Chile saltpetre	B	see SODIUM NITRATE
Chilean natural nitrate	B	see SODIUM NITRATE
Chilean natural potassic nitrate	B	see SODIUM NITRATE AND POTASSIUM NITRATE MIXTURE
Chrome ore	C	see CHROMITE ORE
CHROME PELLETS	C	
CHROMITE ORE	C	
Chromium ore	C	see CHROMITE ORE
Citrus pulp pellets	B or C	see SEED CAKE (Type a, b, c or d)
CLAY	C	
COAL	A and B	
COAL SLURRY	A	
Coconut	B or C	see SEED CAKE (Type a, b, c or d)
COKE	C	
COKE BREEZE	A	
COLEMANITE	C	
COPPER CONCENTRATE	A	
COPPER GRANULES	C	
COPPER MATTE	C	
Copper nickel	A	see NICKEL CONCENTRATE
Copper ore concentrate	A	see COPPER CONCENTRATE
Copper precipitate	A	see CEMENT COPPER
Copra, expelled or extracted	B or C	see SEED CAKE (Type a, b, c or d)
COPRA (dry), UN 1363	B	
Corn gluten	B or C	see SEED CAKE (Type a, b, c or d)
Cotton seed expellers	B or C	see SEED CAKE (Type a, b, c or d)
CRYOLITE	C	
Deadburned magnesite	C	see MAGNESIA (DEADBURNED)
DIAMMONIUM PHOSPHATE	C	
DIRECT REDUCED IRON, (A) (Briquettes, hot-moulded)	B	
DIRECT REDUCED IRON, (B) (lumps, pellets , cold moulded briquettes)	B	
DOLOMITE	C	
Dolomitic quicklime	B	See LIME (UNSLAKED)
D.R.I.	B	See DIRECT REDUCED IRON A or B
FELSPAR LUMP	C	
FERROCHROME	C	
FERROCHROME, exothermic	C	
FERROMANGANESE	C	
Ferromanganese, exothermic	C	See FERROMANGANESE
FERRONICKEL	C	
FERROPHOSPHORUS	B	
Ferrophosphorus briquettes	B	See FERROPHOSPHORUS
FERROSILICON, UN 1408	B	

BULK CARGO SHIPPING NAME	GROUP	REFERENCES
FERROSILICON	B	
FERROUS METAL BORINGS, SHAVINGS, TURNINGS OR CUTTINGS	B	
FERTILIZERS WITHOUT NITRATES	C	
FISH IN BULK	A	
FISHMEAL, (FISHSCRAP) STABILIZED UN 2216	B	
FLUORSPAR	A and B	
FLY ASH	C	
Galena (lead sulphide)	A	see LEAD CONCENTRATE
Garbage tankage	B	see TANKAGE
Gluten pellets	B or C	see SEED CAKE (Type a, b, c or d)
GRANULATED SLAG	C	
Ground nuts, meal	B or C	see SEED CAKE (Type a, b, c or d)
GYPSUM	C	
Hominy chop	B or C	see SEED CAKE (Type a, b, c or d)
ILMENITE CLAY	A	
ILMENITE SAND	C	
IRON CONCENTRATE	A	
IRON CONCENTRATE (pellet feed, sinter feed)	A	
Iron disulphide	C	See PYRITE
IRON ORE	C	
Iron ore (concentrate, pellet feed, sinter feed)	A	see IRON CONCENTRATE (pellet feed or sinter feed)
IRON ORE PELLETS	C	
IRON OXIDE, SPENT, UN 1376	B	
IRON PYRITES	C	
Iron swarf	B	see FERROUS METAL BORINGS, SHAVINGS, TURNINGS OR CUTTINGS
Ironsponge, spent	B	see IRON OXIDE, SPENT
IRONSTONE	C	
LABRADORITE	C	
LEAD AND ZINC CALCINES	A	
LEAD AND ZINC MIDDLINGS	A	
LEAD CONCENTRATE	A	
LEAD NITRATE, UN 1469	B	
LEAD ORE	C	
Lead ore concentrate	A	see LEAD CONCENTRATE
LEAD ORE RESIDUE	A	
LEAD SILVER CONCENTRATE	A	
Lead silver ore	A	see LEAD SILVER CONCENTRATE
Lead sulphide	A	see LEAD CONCENTRATE
Lead sulphide (galena)	A	see LEAD CONCENTRATE
Lignite	B	See BROWN COAL BRIQUETTES
LIME (UNSLAKED)	B	
LIMESTONE	C	
Linseed, expelled or extracted	B or C	see SEED CAKE (Type a, b, c or d)
MAGNESIA (DEADBURNED)	C	
MAGNESIA (UNSLAKED)	B	
Magnesia , clinker or electro-fused	C	see MAGNESIA (DEADBURNED)

BULK CARGO SHIPPING NAME	GROUP	REFERENCES
Magnesia lightburned, calcined or caustic calcined	B	see MAGNESIA (UNSLAKED)
Magnesite clinker	C	see MAGNESIA (DEADBURNED)
MAGNESITE, natural	C	
Magnesium carbonate	C	See MAGNESITE, natural
MAGNESIUM NITRATE, UN 1474	B	
MAGNETITE	A	
Magnetite-taconite	A	See MAGNETITE
Maize, expelled or extracted	B or C	see SEED CAKE (Type a, b, c or d)
MANGANESE CONCENTRATE	A	
MANGANESE ORE	C	
M.A.P.	C	See MONO AMMONIUM PHOSPHATE
MARBLE CHIPS	C	
Meal, oily	B or C	see SEED CAKE (Type a, b, c or d)
METAL SULPHIDE CONCENTRATES	A and B	
Mill feed pellets	B or C	see SEED CAKE (Type a, b, c or d)
Milorganite	C	See BIOSLUDGE
MONOAMMONIUM PHOSPHATE	C	
Muriate of potash	C	see POTASSIUM CHLORIDE
NEFELINE SYENITE (mineral)	A	
NICKEL CONCENTRATE	A	
Nickel ore concentrate	A	see NICKEL CONCENTRATE
Niger seed, expelled or extracted	B or C	see SEED CAKE (Type a, b, c or d)
Oil cake	B or C	see SEED CAKE (Type a, b, c or d)
Palm kernel, expelled or extracted	B or C	see SEED CAKE (Type a, b, c or d)
Peanuts, expelled or extracted	B or C	see SEED CAKE (Type a, b, c or d)
PEANUTS (in shell)	C	
PEAT MOSS	A and B	
PEBBLES (sea)	C	
PELLETS (concentrates)	C	
Pellets (cereal)	B or C	see SEED CAKE (Type a, b, c or d)
Pellets, wood pulp	B	see WOOD PULP PELLETS
Pencil pitch	B	see PITCH PRILL
PENTAHYDRATE CRUDE	A	
PERLITE ROCK	C	
PETROLEUM COKE, calcined or uncalcined	B	
PHOSPHATE ROCK, calcined	C	
PHOSPHATE ROCK, uncalcined	C	
PHOSPHATE, defluorinated	C	
PIG IRON	C	
PITCH PRILL	B	
Pollard pellets	B or C	see SEED CAKE (Type a, b, c or d)
POTASH	C	
Potash muriate	C	see POTASSIUM CHLORIDE
POTASSIUM CHLORIDE	C	
POTASSIUM NITRATE, UN 1486	B	
Potassium nitrate/sodium nitrate (mixture)	B	see SODIUM NITRATE AND POTASSIUM NITRATE MIXTURE, UN 1499
POTASSIUM SULPHATE	C	
Prilled coal tar	B	PITCH PRILL

BULK CARGO SHIPPING NAME	GROUP	REFERENCES
PUMICE	C	
PYRITE	C	
PYRITES (calcined)	A and B	
PYRITES	A	
Pyrites (cupreous, fine, flotation, or sulphur)	A	see PYRITES
Pyritic ash	A and B	See PYRITES (calcined)
PYRITIC ASHES	A	
PYRITIC CINDERS	A	
PYROPHYLLITE	C	
QUARTZ	C	
QUARTZITE	C	
Quicklime	B	see LIME (UNSLAKED)
RADIOACTIVE MATERIAL, LOW SPECIFIC ACTIVITY (LSA-1)	B	
RADIOACTIVE MATERIAL, SURFACE CONTAMINATED OBJECT(S) (SCO-1)	B	
Rape seed, expelled or extracted	B or C	see SEED CAKE (Type a, b, c or d)
RASORITE, anhydrous	C	
Rice bran	B or C	see SEED CAKE (Type a, b, c or d)
Rice broken	B or C	see SEED CAKE (Type a, b, c or d)
Rough ammonia tankage	B	see TANKAGE
RUTILE SAND	C	
Safflower seed, expelled or extracted	B or C	see SEED CAKE (Type a, b, c or d)
SALT	C	
SALT CAKE	C	
SALT ROCK	C	
Saltpetre	B	see POTASSIUM NITRATE
SAND	C	
Sand, ilmenite	C	see ILMENITE SAND
Sand, zircon	C	see ZIRCON SAND
SAWDUST	B	
SCRAP METAL	C	
SEED CAKE Type (a)	B	
SEED CAKE Type (b)	B	
SEED CAKE Type (c)	B	
SEED CAKE Type (d)	C	
Seed expellers, oily	B or C	see SEED CAKE (Type a, b, c or d)
SILICOMANGANESE	B	
SILVER LEAD CONCENTRATE	A	
Silver lead ore concentrate	A	see SILVER LEAD CONCENTRATE
Sinter		See ZINC AND LEAD CALCINES
Slag, granulated	C	see GRANULATED SLAG
SLIG, iron ore	A	
SODA ASH	C	
SODIUM NITRATE, UN 1498	B	
SODIUM NITRATE AND POTASSIUM NITRATE MIXTURE, UN 1499	B	
Soyabean, expelled or extracted	B or C	see SEED CAKE (Type a, b, c or d)
STAINLESS STEEL GRINDING DUST	C	

BULK CARGO SHIPPING NAME	GROUP	REFERENCES
Steel swarf	B	see FERROUS METAL BORINGS, SHAVINGS, TURNINGS OR CUTTINGS
Stibnite	C	See ANTIMONY ORE AND RESIDUE
STONE CHIPPINGS	C	
Strussa pellets	B or C	see SEED CAKE (Type a, b, c or d)
SUGAR	C	
SULPHATE OF POTASH AND MAGNESIUM	C	
Sulphide concentrates	B	see METAL SULPHIDE CONCENTRATES
SULPHUR, UN 1350	B	
Sunflower seed, expelled or extracted	B or C	see SEED CAKE (Type a, b, c or d)
SUPERPHOSPHATE	C	
SUPERPHOSPHATE, triple granular	C	
Swarf	B	see FERROUS METAL BORINGS, SHAVINGS, TURNINGS OR CUTTINGS
TACONITE PELLETS	C	
TALC	C	
TANKAGE	B	
Tankage fertilizer	B	see TANKAGE
TAPIOCA	C	
Toasted meals	B or C	see SEED CAKE (Type a, b, c or d)
Triple superphosphate	C	see SUPERPHOSPHATE, triple granular
UREA	C	
VANADIUM ORE	B	
VERMICULITE	C	
WHITE QUARTZ	C	
WOODCHIPS	B	
WOOD PELLETS	B	
WOOD PULP PELLETS	B	
ZINC AND LEAD CALCINES	A	
ZINC AND LEAD MIDDLINGS	A	
ZINC ASHES, UN 1435	B	
ZINC CONCENTRATE	A	
Zinc, dross, residue or skimmings	B	see ZINC ASHES
Zinc ore, burnt ore, calamine, concentrates or crude	A	see ZINC CONCENTRATE
ZINC SINTER	A	
ZINC SLUDGE	A	
Zinc sulphide	A	see ZINC CONCENTRATE
Zinc sulphide (blende)	A	see ZINC CONCENTRATE
ZIRCON SAND	C	