INTERNATIONAL MARITIME ORGANIZATION

IMO

E

SUB-COMMITTEE ON DANGEROUS GOODS, SOLID CARGOES AND CONTAINERS
12th session
Agenda item 19

DSC 12/19/Add.1
7 November 2007
Original: ENGLISH

REPORT TO THE MARITIME SAFETY COMMITTEE

Attached is the annex to annex 4 to the report to the Maritime Safety Committee (DSC 12/19).

***

For reasons of economy, this document is printed in a limited number. Delegates are kindly asked to bring their copies to meetings and not to request additional copies.

ANNEX

DRAFT TEXT OF THE MANDATORY INTERNATIONAL MARITIME SOLID BULK CARGOES (IMSBC) CODE

Table of Contents

Foreword
`

Section 1 General provisions and definitions

Section 2 General loading, carriage and unloading precautions

Section 3 Safety of personnel and ship

Section 4 Assessment of acceptability of consignments for safe shipment

Section 5 Trimming procedures

Section 6 Methods of determining angle of repose

Section 7 Cargoes that may liquefy

Section 8 Test procedures for cargoes that may liquefy

Section 9 Materials possessing chemical hazards

Section 10 Carriage of solid bulk wastes

Section 11 Security provisions

Section 12 Stowage factor conversion tables

Section 13 References

Appendix 1 Individual schedules of solid bulk cargoes

Appendix 2 Laboratory test procedures, associated apparatus and standards

Appendix 3 Properties of solid bulk cargoes

Appendix 4 Index of solid bulk cargoes

FOREWORD

The International Convention for the Safety of Life at Sea, 1974 (SOLAS Convention), as amended, deals with various aspects of maritime safety and contains, in parts A and B of chapter VI and part B of chapter VII, the mandatory provisions governing the carriage of solid bulk cargoes and the carriage of dangerous goods in solid form in bulk, respectively. These provisions are amplified in the Code of Safe Practice for Solid Bulk Cargoes (BC Code).

Detailed fire protection arrangements for ships carrying solid bulk cargoes are incorporated into chapter II-2 of the SOLAS Convention by regulations 10 and 19. Attention is drawn to regulation II-2/19.4 (or II-2/54.3) of the SOLAS Convention as amended. This provides for an appropriate document as evidence of compliance of construction and equipment with the requirements of regulation II-2/19 (or II.2/54) to be issued to ships carrying dangerous goods in solid form in bulk, as defined in regulation VII/7 of the Convention, except class 6.2 and class 7, which are:

- cargo ships of 500 gross tonnage or over constructed on or after 1 September 1984; or

- cargo ships of less than 500 gross tonnage constructed on or after 1 February 1992.

The BC Code that was adopted by resolution [MSC.xx(85)] was recommended to Governments for adoption or for use as the basis for national regulations in pursuance of their obligations under regulation of the SOLAS Convention, as amended. The BC Code is mandatory under the provision of the SOLAS Convention from [date of entry into force]. However, some parts of the Code continue to be recommendatory or informative. It needs to be emphasized that, in the context of the language of the Code: the words “shall”, “should” and “may”, when used in the Code, mean that the relevant provisions are “mandatory”, “recommendatory” and “optional”, respectively. Observance of the Code harmonizes the practices and procedures to be followed and the appropriate precautions to be taken in the loading, trimming, carriage and discharge of solid bulk cargoes when transported by sea, ensuring compliance with the mandatory provisions of the SOLAS Convention.

The Code has undergone many changes, both in layout and content, in order to keep pace with the expansion and progress of industry. Maritime Safety Committee (MSC) is authorized by the Organization’s Assembly to adopt amendments to the Code, thus enabling the IMO to respond promptly to developments in transport.

The MSC at its eighty-fifth session agreed that, in order to facilitate the safe transport of solid bulk cargoes, the provisions of the BC Code, 2008, may be applied from 1 January 2009 on a voluntary basis, pending their official entry into force on 1 January 2011 without any transitional period. This is described in resolution [MSC. xx(85)].

Section 1

General Provisions

1.1 Introductory Note

The problems involved in the carriage of bulk cargoes were recognized by the delegates to the 1960 International Conference on Safety of Life at Sea, but at that time it was not possible to frame detailed requirements, except for the carriage of grain. The Conference did recommend, however, in paragraph 55 of Annex D to the Convention, that an internationally acceptable code of safe practice for the shipment of bulk cargoes should be drawn up under the sponsorship of the International Maritime Organization (IMO). This work was undertaken by the Organization's Sub-Committee on Containers and Cargoes and several editions of the Code of Safe Practice for solid Bulk Cargoes (BC Code) have been published, since the first edition in 1965. The Sub-Committee was expanded to include dangerous goods and is now called the Sub-Committee on Dangerous Goods, Solid Cargoes and Containers (DSC Sub-Committee).

The prime hazards associated with the shipment of solid bulk cargoes are those relating to structural damage due to improper cargo distribution, loss or reduction of stability during a voyage and chemical reactions of cargoes. Therefore the primary aim of this Code is to facilitate the safe stowage and shipment of solid bulk cargoes by providing information on the dangers associated with the shipment of certain types of solid bulk cargoes and instructions on the procedures to be adopted when the shipment of solid bulk cargoes is contemplated. The requirements for the transport of grain are covered by the International Code for the Safe Carriage of Grain in Bulk (International Grain Code, 1991).

1.2 Cargoes listed in this Code

1.2.1 Typical cargoes currently shipped in bulk, together with advice on their properties and methods of handling, are given in the schedules for individual cargoes. However, these schedules are not exhaustive and the properties attributed to the cargoes are given only for guidance. Consequently, before loading, it is essential to obtain current valid information from the shipper on the physical and chemical properties of the cargoes presented for shipment. The shipper shall provide appropriate information about the cargo to be shipped (see section 4.2).

1.2.2 The master shall consult the appropriate cargo schedule in this Code and observe all necessary precautions. The master shall consider to consult the authorities at the ports of loading and discharge, as necessary, concerning the requirements which may be in force and applicable for the carriage.

1.3 Cargoes not listed in this Code

1.3.1 If a solid cargo which is not listed in appendix 1 to this Code is proposed for carriage in bulk, the shipper shall, prior to loading, provide the competent authority of the port of loading with the characteristics and properties of the cargo in accordance with section 4 of this Code. Based on the information received, the competent authority will assess the acceptability of the cargo for safe shipment.

1.3.1.1 When it is assessed that the solid bulk cargo proposed for carriage may present hazards as those defined by group A or B of this Code, advice is to be sought from the competent authorities of the port of unloading and of the flag state. The three competent authorities will set the preliminary suitable conditions for the carriage of this cargo.

1.3.1.2 When it is assessed that the solid bulk cargo proposed for carriage presents no specific hazards for transportation, the carriage of this cargo will be authorized. The competent authorities of the port of unloading and of the flag State will be advised of that authorization.

1.3.2 The competent authority of the port of loading will provide to the master a certificate stating the characteristics of the cargo and the required conditions for carriage and handling of this shipment. The competent authority of the port of loading will also submit an application to the Organization, within one year from the issue of the certificate, to incorporate this solid bulk cargo into annex 1 of this Code. The format of this application will be as outlined in subsection 1.3.3.

1.3.3 Format for the properties of cargoes not listed in this Code and conditions of the carriage

Tentative Bulk Cargo Shipping Name (in capital letters)

DESCRIPTION (Describe the cargo)

CHARACTERISTICS (fill the following table)

ANGLE OF REPOSE	BULK DENSITY (kg/m^3)	STOWAGE FACTOR (m^3/t)
SIZE	**CLASS**	**GROUP**

HAZARD (Clarify the hazard of carriage of the cargo.)

(Determine the following types of requirements. If no requirement is necessary, write "No special requirements".)

STOWAGE & SEGREGATION

HOLD CLEANLINESS

WEATHER PRECAUTIONS

LOADING

PRECAUTIONS

VENTILATION

CARRIAGE

DISCHARGE

CLEAN UP

(Specify the emergency procedures for the cargo, if necessary.)

EMERGENCY PROCEDURES

SPECIAL EMERGENCY EQUIPMENT TO BE CARRIED
EMERGENCY PROCEDURES **EMERGENCY ACTION IN THE EVENT OF FIRE** **MEDICAL FIRST AID**

1.4 Application and Implementation of this Code

The provisions contained in this Code apply to all ships to which the SOLAS Convention, as amended, applies and which are carrying solid bulk cargoes as defined in regulation 2 of part A of chapter VI of the Convention.

Although this Code is legally treated as a mandatory instrument under the SOLAS Convention the following provisions of this Code remain recommendatory or informative:

Section 11 Security provisions (except subsection 11.1.1);

Section 12 Stowage factor conversion tables;

Section 13 References to related information and recommendations;

Appendices other than appendix 1 "Individual schedules of solid bulk cargoes"; and

The texts in the sections for "DESCRIPTION", "CHARACTERISTICS", "HAZARDS" and "EMERGENCY PROCEDURES" of individual schedules of solid bulk cargoes in appendix 1.

1.5 Exemptions and Equivalent measures

1.5.1 Where this Code requires that a particular provision for the transport of solid bulk cargoes shall be complied with, a competent authority or competent authorities (port State of departure, port State of arrival or flag State) may authorize any other provision by exemption if satisfied that such provision is at least as effective and safe as that required by this Code. Acceptance of an exemption authorized under this section by a competent authority not party to it is subject to the discretion of that competent authority. Accordingly, prior to any shipment covered by the exemption, the recipient of the exemption shall notify other competent authorities concerned.

1.5.2 Competent authority or competent authorities which have taken the initiative with respect to the exemption:

.1 shall send a copy of such exemption to the Organization which shall bring it to the attention of the Contracting Parties to SOLAS, and

.2 shall take action to amend this Code to include the provisions covered by the exemption, as appropriate.

1.5.3 The period of validity of the exemption shall be not more than five years from the date of authorization. An exemption that is not covered under 1.5.2.2 may be renewed in accordance with the provisions of this section.

1.5.4 A copy of the exemption or an electronic copy thereof shall be maintained on board each ship transporting solid bulk cargoes in accordance with the exemption, as appropriate.

1.5.5 Contact information for the main designated national competent authorities concerned is given in the separate document issued by the Organization.

1.6 Conventions

Parts A and B of chapter VI and part B of chapter VII of the SOLAS Convention, as amended, deal with the carriage of solid bulk cargoes and the carriage of dangerous good in solid form in bulk, respectively, and are reproduced in full:

CHAPTER VI

CARRIAGE OF CARGOES

Part A

General Provisions

Regulation 1
Definitions

For the purpose of this chapter, unless expressly provided otherwise:

1 *BC Code* means the Code of Safe Practice for Solid Bulk Cargoes adopted by the Maritime Safety Committee of the Organization by resolution [MSC… (85)], as may be amended by the Organization, provided that such amendments are adopted, brought into force and take effect in accordance with the provisions of article VIII of the present Convention concerning the amendment procedures applicable to the annex other than chapter I.

2 *Solid bulk cargo* means any cargo, other than liquid or gas, consisting of a combination of particles, granules or any larger pieces of material generally uniform in composition, which is loaded directly into the cargo spaces of a ship without any intermediate form of containment.

Regulation 2
Application

1 This chapter applies to the carriage of cargoes (except liquids in bulk, gases in bulk and those aspects of carriage covered by other chapters) which, owing to their particular hazards to ships or persons on board, may require special precautions in all ships to which the present regulations apply and in cargo ships of less than 500 gross tonnage. However, for cargo ships of less than 500 gross tonnage, the Administration, if it considers that the sheltered nature and conditions of voyage are such as to render the application of any specific requirements of part A or B of this chapter unreasonable or unnecessary, may take other effective measures to ensure the required safety for these ships.

2 To supplement the provisions of parts A and B of this chapter, each Contracting Government shall ensure that appropriate information on cargo and its stowage and securing is provided, specifying, in particular, precautions necessary for the safe carriage of such cargoes.*

Regulation 3
Requirements for the carriage of solid bulk cargoes other than grain

The carriage of solid bulk cargoes other than grain shall be in compliance with the relevant provisions of the BC Code.

Regulation 4
Cargo information

1 The shipper shall provide the master or his representative with appropriate information on the cargo sufficiently in advance of loading to enable the precautions which may be necessary for proper stowage and safe carriage of the cargo to be put into effect. Such information† shall be confirmed in writing* and by appropriate shipping documents prior to loading the cargo on the ship.

2 The cargo information shall include:

---

* Refer to:

.1 the Code of Safe Practice for Cargo Stowage and Securing adopted by the Organization by resolution A.714(17), as amended;
.2 the Code of Safe Practice for Ships Carrying Timber Deck Cargoes adopted by the Organization by resolution A.715(17), as amended; MSC/Circ.525, Guidance note on precautions to be taken by the masters of ships of below 100 metres in length engaged in the carriage of logs; and MSC/Circ.548, Guidance note on precautions to be taken by masters of ships engaged in the carriage of timber cargoes; and
.3 the International Maritime Solid Bulk Cargoes (IMSBC) Code adopted by the Organization by resolution MSC.[…](85).

† Refer to MSC/Circ.663, Form for cargo information.

* Reference to documents in this regulation does not preclude the use of electronic data processing (EDP) and electronic data interchange (EDI) transmission techniques as an aid to paper documentation.

.1 in the case of general cargo, and of cargo carried in cargo units, a general description of the cargo, the gross mass of the cargo or of the cargo units, and any relevant special properties of the cargo. For the purpose of this regulation the cargo information required in sub-chapter 1.9 of the Code of Safe Practice for Cargo Stowage and Securing, adopted by the Organization by resolution A.714(17), as may be amended, shall be provided. Any such amendment to sub-chapter 1.9 shall be adopted, brought into force and take effect in accordance with the provisions of article VIII of the present Convention concerning the amendment procedures applicable to the annex other than chapter I;

.2 in the case of solid bulk cargo, information as required by section 4 of the BC Code.

3 Prior to loading cargo units on board ships, the shipper shall ensure that the gross mass of such units is in accordance with the gross mass declared on the shipping documents.

Regulation 5
Oxygen analysis and gas detection equipment

1 When transporting a solid bulk cargo which is liable to emit a toxic or flammable gas, or cause oxygen depletion in the cargo space, an appropriate instrument for measuring the concentration of gas or oxygen in the air shall be provided together with detailed instructions for its use. Such an instrument shall be to the satisfaction of the Administration.

2 The Administration shall take steps to ensure that crews of ships are trained in the use of such instruments.

Regulation 6
The use of pesticides in ships[*]

Appropriate precautions shall be taken in the use of pesticides in ships, in particular for the purposes of fumigation.

Regulation 7
Stowage and securing

1 Cargo, cargo units[†] and cargo transport units[‡] carried on or under deck shall be so loaded, stowed and secured as to prevent as far as is practicable, throughout the voyage, damage or hazard to the ship and the persons on board, and loss of cargo overboard.

---

[*] Refer to:

.1 [The IMO Recommendations on the safe use of pesticides in ships (MSC/Circ.612, as amended)];

.2 [The IMO Recommendations on the safe use of pesticides in ships applicable to the fumigation of cargo holds (MSC.1/Circ.[…])]; and

.3 [The IMO Recommendations on the safe use of pesticides in ships applicable to the fumigation of cargo transport units (MSC.1/Circ.[…])] as appropriate.

[†] Refer to the Code of Safe Practice for Cargo Stowage and Securing, adopted by the Organization by resolution A.714(17) as amended.

2 Cargo, cargo units and cargo transport units shall be so packed and secured within the unit as to prevent, throughout the voyage, damage or hazard to the ship and the persons on board.

3 Appropriate precautions shall be taken during loading and transport of heavy cargoes or cargoes with abnormal physical dimensions to ensure that no structural damage to the ship occurs and to maintain adequate stability throughout the voyage.

4 Appropriate precautions shall be taken during loading and transport of cargo units and cargo transport units on board ro–ro ships, especially with regard to the securing arrangements on board such ships and on the cargo units and cargo transport units and with regard to the strength of the securing points and lashings.

5 Freight containers shall not be loaded to more than the maximum gross weight indicated on the Safety Approval Plate under the International Convention for Safe Containers (CSC), as amended.

6 All cargoes, other than solid and liquid bulk cargoes, cargo units and cargo transport units, shall be loaded, stowed and secured throughout the voyage in accordance with the Cargo Securing Manual approved by the Administration. In ships with ro–ro spaces, as defined in regulation II-2/3.41, all securing of such cargoes, cargo units, and cargo transport units, in accordance with the Cargo Securing Manual, shall be completed before the ship leaves the berth. The Cargo Securing Manual shall be drawn up to a standard at least equivalent to relevant guidelines developed by the Organization.*

Part B

Special provisions for solid bulk cargoes

Regulation 8
Acceptability for shipment

1 Prior to loading a solid bulk cargo, the master shall be in possession of comprehensive information on the ship's stability and on the distribution of cargo for the standard loading conditions. The method of providing such information shall be to the satisfaction of the Administration.*

---

‡ Refer to the International Maritime Dangerous Goods (IMDG) Code, adopted by the Organization by resolution MSC.122(75).

* Refer to the Guidelines on the preparation of the Cargo Securing Manual (MSC/Circ.745).

* Refer to:

.1 the Recommendation on intact stability for passenger and cargo ships under 100 metres in length adopted by the Organization by resolution A.167(ES.IV) and to amendments to this Recommendation adopted by the Organization by resolution A.206(VII); and

.2 the Recommendation on a severe wind and rolling criterion (weather criterion) for the intact stability of passenger and cargo ships of 24 metres in length and over adopted by the Organization by resolution A.562(14).

Regulation 9
Loading, unloading and stowage of solid bulk cargoes[†]

1 For the purpose of this regulation, terminal representative means a person appointed by the terminal or other facility, where the ship is loading or unloading, who has responsibility for operations conducted by that terminal or facility with regard to the particular ship.

2 To enable the master to prevent excessive stresses in the ship's structure, the ship shall be provided with a booklet, which shall be written in a language with which the ship's officers responsible for cargo operations are familiar. If this language is not English, the ship shall be provided with a booklet written also in the English language. The booklet shall, as a minimum, include:

.1 stability data, as required by regulation II-1/22;

.2 ballasting and deballasting rates and capacities;

.3 maximum allowable load per unit surface area of the tank top plating;

.4 maximum allowable load per hold;

.5 general loading and unloading instructions with regard to the strength of the ship's structure including any limitations on the most adverse operating conditions during loading, unloading, ballasting operations and the voyage;

.6 any special restrictions such as limitations on the most adverse operating conditions imposed by the Administration or organization recognized by it, if applicable; and

.7 where strength calculations are required, maximum permissible forces and moments on the ship's hull during loading, unloading and the voyage.

3 Before a solid bulk cargo is loaded or unloaded, the master and the terminal representative shall agree on a plan[*] which shall ensure that the permissible forces and moments on the ship are not exceeded during loading or unloading, and shall include the sequence, quantity and rate of loading or unloading, taking into consideration the speed of loading or unloading, the number of pours and the deballasting or ballasting capability of the ship. The plan and any subsequent amendments thereto shall be lodged with the appropriate authority of the port State.

4 The master and terminal representative shall ensure that loading and unloading operations are conducted in accordance with the agreed plan.

---

† Refer to the Code of Practice for the Safe Loading and Unloading of Bulk Carriers (BLU Code) adopted by the Organization by resolution A.862(20).

* Refer to the Code of Practice for the Safe Loading and Unloading of Bulk Carriers (BLU Code) adopted by the Organization by resolution A.862(20).

5 If during loading or unloading any of the limits of the ship referred to in paragraph 2 are exceeded or are likely to become so if the loading or unloading continues, the master has the right to suspend operation and the obligation to notify accordingly the appropriate authority of the port State with which the plan has been lodged. The master and the terminal representative shall ensure that corrective action is taken. When unloading cargo, the master and terminal representative shall ensure that the unloading method does not damage the ship's structure.

6 The master shall ensure that ship's personnel continuously monitor cargo operations. Where possible, the ship's draught shall be checked regularly during loading or unloading to confirm the tonnage figures supplied. Each draught and tonnage observation shall be recorded in a cargo log-book. If significant deviations from the agreed plan are detected, cargo or ballast operations or both shall be adjusted to ensure that the deviations are corrected.

CHAPTER VII

Carriage of dangerous goods

Part B

Carriage of dangerous goods in solid form in bulk

Regulation 7
Definitions

Dangerous goods in solid form in bulk means any material, other than liquid or gas, consisting of a combination of particles, granules or any larger pieces of material, generally uniform in composition, which is covered by the IMDG Code and is loaded directly into the cargo spaces of a ship without any intermediate form of containment, and includes such materials loaded in a barge on a barge-carrying ship.

Regulation 8
Application[*]

1 Unless expressly provided otherwise, this part applies to the carriage of dangerous goods in solid form in bulk in all ships to which the present regulations apply and in cargo ships of less than 500 gross tonnage.

2 The carriage of dangerous goods in solid form in bulk is prohibited except in accordance with the provisions of this part.

3 To supplement the provisions of this part, each Contracting Government shall issue, or cause to be issued, instructions on emergency response and medical first aid relevant to incidents involving dangerous goods in solid form in bulk, taking into account the guidelines developed by the Organization.[‡]

---

[*] Refer to regulation II-2/19, which contains special requirements for ship carrying dangerous goods.
[‡] Refer to the *Medical First Aid Guide for Use in Accidents involving Dangerous Goods (MFAG)* (MSC/Circ.857).

Regulation 9
Requirements for the carriage of dangerous goods in solid form in bulk

The carriage of dangerous goods in solid form in bulk shall be in compliance with the relevant provisions of the BC Code, as defined in regulation VI/1.1.

Regulation 10
Documents

1 In all documents relating to the carriage of dangerous goods in solid form in bulk by sea, the bulk cargo shipping name of the goods shall be used (trade names alone shall not be used).

2 Each ship carrying dangerous goods in solid form in bulk shall have a special list or manifest setting forth the dangerous goods on board and the location thereof. A detailed stowage plan, which identifies by class and sets out the location of all dangerous goods on board, may be used in place of such a special list or manifest. A copy of one of these documents shall be made available before departure to the person or organization designated by the port State authority.

Regulation 11
Stowage and segregation requirements

1 Dangerous goods in solid form in bulk shall be loaded and stowed safely and appropriately in accordance with the nature of the goods. Incompatible goods shall be segregated from one another.

2 Dangerous goods in solid form in bulk, which are liable to spontaneous heating or combustion, shall not be carried unless adequate precautions have been taken to minimize the likelihood of the outbreak of fire.

3 Dangerous goods in solid form in bulk, which give off dangerous vapours, shall be stowed in a well ventilated cargo space.

Regulation 12
Reporting of incidents involving dangerous goods

1 When an incident takes place involving the loss or likely loss overboard of dangerous goods in solid form in bulk into the sea, the master, or other person having charge of the ship, shall report the particulars of such an incident without delay and to the fullest extent possible to the nearest coastal State. The report shall be drawn up based on general principles and guidelines developed by the Organization.*

* Refer to the General principles for ship reporting systems and ship reporting requirements, including Guidelines for reporting incidents involving dangerous goods, harmful substances and/or marine pollutants, adopted by the Organization by resolution A.851(20).

2 In the event of the ship referred to in paragraph 1 being abandoned, or in the event of a report from such a ship being incomplete or unobtainable, the company, as defined in regulation IX/1.2, shall, to the fullest extent possible, assume the obligations placed upon the master by this regulation.

1.7 Definitions

For the purpose of this Code, unless expressly provided otherwise, the following definitions shall apply:

1.7.1 *Angle of repose* means the maximum slope angle of non-cohesive (i.e., free-flowing) granular material. It is measured as the angle between a horizontal plane and the cone slope of such material.

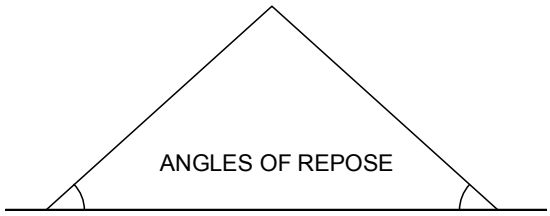

Angle of Repose

1.7.2 *Bulk Cargo Shipping Name (BCSN)* identifies a bulk cargo during transport by sea. When a cargo is listed in this Code, the Bulk Cargo Shipping Name of the cargo is identified by capital letters in the individual schedules or in the index. When the cargo is a dangerous good, as defined in the IMDG Code, as defined in regulation VII/1.1 of the SOLAS Convention, the Proper Shipping Name of that cargo is the Bulk Cargo Shipping Name.

1.7.3 *Bulk density* means the weight of solids, air and water per unit volume. Bulk density is expressed in kilograms per cubic metre (kg/m^3), in general. The void spaces in the cargo may be filled with air and water.

1.7.4 *Cargo space* means any space in a ship designated for carriage of cargoes.

1.7.5 *Cargoes which may liquefy* means cargoes which contain a certain proportion of fine particles and a certain amount of moisture. They may liquefy if shipped with a moisture content in excess of their transportable moisture limit.

1.7.6 *Cohesive material* means materials other than non-cohesive materials.

1.7.7 *Competent Authority* means any national regulatory body or authority designated or otherwise recognized as such for any purpose in connection with this Code.

1.7.8 *Concentrates* means materials obtained from a natural ore by a process of enrichment or beneficiation by physical or chemical separation and removal of unwanted constituents.

1.7.9 *Consignment* means a solid bulk cargo presented by a shipper for transport.

1.7.10 *Flow moisture point* means the percentage moisture content (wet mass basis) at which a flow state develops under the prescribed method of test in a representative sample of the material (see paragraph 1 of appendix 2).

1.7.11 *Flow state* means a state occurring when a mass of granular material is saturated with liquid to an extent that, under the influence of prevailing external forces such as vibration, impaction or ships motion, it loses its internal shear strength and behaves as a liquid.

1.7.12 *Group A* consists of cargoes which may liquefy if shipped at a moisture content in excess of their transportable moisture limit.

1.7.13 *Group B* consists of cargoes which possess a chemical hazard which could give rise to a dangerous situation on a ship.

1.7.14 *Group C* consists of cargoes which are neither liable to liquefy (Group A) nor to possess chemical hazards (Group B).

1.7.15 *High-density solid bulk cargo* means a solid bulk cargo with a stowage factor of 0.56 m^3/t or less.

1.7.16 *IMDG Code* means the International Maritime Dangerous Goods (IMDG) Code adopted by the Maritime Safety Committee of the Organization by resolution MSC.122(75), as may be amended by the Organization.

1.7.17 *Incompatible materials* means materials that may react dangerously when mixed. They are subject to the segregation requirements of subsection 9.3 and the schedules for individual cargoes classified in Group B.

1.7.18 *International Ship and Port Facility Security (ISPS) Code* means the International Code for the Security of Ships and of Port Facilities consisting of Part A (the provisions of which shall be treated as mandatory) and part B (the provisions of which shall be treated as recommendatory), as adopted, on 12 December 2002, by resolution 2 of the Conference of Contracting Governments to the International Convention for the Safety of Life at Sea, 1974 as may be amended by the Organization.

1.7.19 *Materials hazardous only in bulk (MHB)* means materials which may possess chemical hazards when carried in bulk other than materials classified as dangerous goods in the IMDG Code.

1.7.20 *Moisture content* means that portion of a representative sample consisting of water, ice or other liquid expressed as a percentage of the total wet mass of that sample.

1.7.21 *Moisture migration* means the movement of moisture contained in a cargo by settling and consolidation of the cargo due to vibration and ship's motion. Water is progressively displaced, which may result in some portions or all of the cargo developing a flow state.

1.7.22 *Non cohesive material* means dry materials that readily shift due to sliding during transport, as listed in appendix 3, paragraph 1, "Properties of dry bulk cargoes".

1.7.23 *Representative test sampl*e means a sample of sufficient quantity for the purpose of testing the physical and chemical properties of the consignment to meet specified requirements.

1.7.24 *Shipper* means any person by whom or in whose name, or on whose behalf, a contract of carriage of goods by sea has been concluded with a carrier, or any person by whom or in whose name, or on whose behalf, the goods are actually delivered to the carrier in relation to the contract of carriage by sea.

1.7.25 *Solid bulk cargo* means any cargo, other than a liquid or a gas, consisting of a combination of particles, granules or any larger pieces of material generally uniform in composition which is loaded directly into the cargo spaces of a ship without any intermediate form of containment.

1.7.26 *Stowage factor* means the figure which expresses the number of cubic metres which one tonne of cargo will occupy.

1.7.27 *Transportable Moisture Limit (TML) of a cargo which may liquefy* means the maximum moisture content of the cargo which is considered safe for carriage in ships not complying with the special provisions of subsection 7.3.2. It is determined by the test procedures, approved by a competent authority, such as those specified in paragraph 1 of appendix 2.

1.7.28 *Trimming* means any levelling of a cargo within a cargo space, either partial or total.

1.7.29 *Ventilation* means exchange of air from outside to inside a cargo space.

.1 *Continuous Ventilation* means ventilation that is operating at all times.

.2 *Mechanical Ventilation* means power-generated ventilation.

.3 *Natural Ventilation* means ventilation that is not power-generated.

.4 *Surface Ventilation* means ventilation of the space above the cargo.

Section 2

General loading, carriage and unloading precautions

2.1 Cargo distribution

2.1.1 General

A number of accidents have occurred as a result of improper loading and unloading of solid bulk cargoes. It shall be noted that solid bulk cargoes have to be properly distributed throughout the ship to provide adequate stability and to ensure that the ship's structure is never overstressed. Furthermore, the shipper shall provide the master with adequate information about the cargo, as specified in section 4, to ensure that the ship is properly loaded. Further guidance is found in the other Code developed by the Organization

* Refer to the Code of Practice for the Safe Loading and Unloading of Bulk Carriers, adopted by the Organization by resolution A.862(20), as amended.

2.1.2 To prevent the structure being overstressed

A general cargo ship is normally constructed to carry cargoes in the range of 1.39 to 1.67 cubic metres per tonne when loaded to full bale and deadweight capacities. When loading a high-density solid bulk cargo, particular attention shall be paid to the distribution of weights to avoid excessive stresses, taking into account that the loading conditions may be different from those found normally and that improper distribution of such cargo may be capable of stressing either the structure under the load or the entire hull. To set out exact rules for the distribution of loading is not practicable for all ships because the structural arrangements of each vessel may vary greatly. The information on proper distribution of cargo may be provided in the ship's stability information booklet or may be obtained by the use of loading calculators, if available.

2.1.3 To aid stability

2.1.3.1 Having regard to regulation II-1/22.1 of SOLAS Convention, a stability information booklet shall be provided aboard all ships subject to the Convention. The master shall be able to calculate the stability for the anticipated worst conditions during the voyage as well as that on departure and demonstrate that the stability is adequate.

2.1.3.2 Shifting divisions and bins, of adequate strength, shall be erected whenever solid bulk cargoes, which are suspected of readily shifting, are carried in 'tween-deck cargo spaces or in only partially filled cargo spaces.

2.1.3.3 As far as practicable, high-density cargoes shall normally be loaded in the lower hold cargo spaces in preference to 'tween-deck cargo spaces.

2.1.3.4 When it is necessary to carry high-density cargoes in 'tween-decks or higher cargo spaces, due consideration shall be paid to ensure that the deck area is not overstressed and that the ship's stability is not reduced below the minimum acceptable level specified in the ship's stability data.

2.2 Loading and unloading

2.2.1 Cargo spaces shall be inspected and prepared for the particular cargo which is to be loaded. Guidance on bulk carrier inspections is contained in recommendations published by the Organization.*

* Refer to the Guidance to Ships' Crews and Terminal Personnel for Bulk Carrier Inspections, adopted by the Organization by resolution A.866(20).

2.2.2 Due consideration shall be paid to bilge wells and strainer plates, for which special preparation is necessary, to facilitate drainage and to prevent entry of the cargoes into the bilge system.

2.2.3 Bilge lines, sounding pipes and other service lines within the cargo space shall be in good order.

2.2.4 Because of the velocity at which some high-density solid bulk cargoes are loaded, special care may be necessary to protect cargo space fittings from damage. To sound bilges after the completion of loading may be effective to detect damage on cargo space fittings.

2.2.5 As far as practicable ventilation systems shall be shut down or screened and air conditioning systems placed on recirculation during loading or discharge, to minimize dust ingress into the living quarters or other interior spaces.

2.2.6 Due consideration shall be paid to minimize the extent to which dust may come into contact with moving parts of deck machinery and external navigational aids.

Section 3

Safety of personnel and ship

3.1 General requirements

3.1.1 Prior to and during loading, carriage and discharge of a solid bulk cargo, all necessary safety precautions shall be observed.

3.1.2 A copy of the instructions on emergency response and medical first aid* relevant to incidents involving dangerous goods in solid form in bulk shall be on board.

* Reference information is provided in the Medical First Aid Guide for Use in Accidents Involving Dangerous Goods (MFAG) (MSC/Circ.857), published by the Organization.

3.2 Poisoning, corrosive and asphyxiation hazards

3.2.1 Some solid bulk cargoes are susceptible to oxidation, which may result in oxygen depletion, emission of toxic gases or fumes and self-heating. Some cargoes are not liable to oxidize but may emit toxic fumes, particularly when wet. There are also cargoes which, when wetted, are corrosive to skin, eyes and mucous membranes or to the ship's structure. When these cargoes are carried particular attention shall be paid to protection of personnel and the need for special precautions to be taken prior to loading and after unloading.

3.2.2 Appropriate attention shall be paid that cargo spaces and adjacent spaces may be depleted in oxygen or may contain toxic or asphyxiating gases, and that an empty cargo space or tank which has remained closed for some time may have insufficient oxygen to support life.

3.2.3 Many solid bulk cargoes are liable to cause oxygen depletion in a cargo space or tank. These include, but are not limited to, most vegetable products and forest products, ferrous metals, metal sulphide concentrates and coal cargoes.

3.2.4 Prior to entry into an enclosed space aboard a ship, appropriate procedures shall be followed taking into account the recommendations developed by the Organization*. It is to be noted that, after a cargo space or tank has been tested and generally found to be safe for entry, small areas may exist where oxygen is deficient or toxic fumes are still present.

* Refer to the "Recommendations for entering enclosed spaces aboard ships" adopted by the Organization by resolution A.864(20), as amended.

3.2.5 When carrying a solid bulk cargo which is liable to emit a toxic or flammable gas, and/or cause oxygen depletion in the cargo space, the appropriate instrument(s) for measuring the concentration of gas and oxygen in the cargo space shall be provided.

3.2.6 Emergency entry into a cargo space shall be undertaken only by trained personnel wearing self-contained breathing apparatus and protective clothing and always under the supervision of a responsible officer.

3.3 Health hazards due to dust

To minimize the chronic and acute risks associated with exposure to the dust of some solid bulk cargoes, the need for a high standard of personal hygiene of those exposed to the dust cannot be over emphasized. Precautions, including the use of appropriate breathing protection, protective clothing, protective skin creams, adequate personal washing and laundering of outer clothing, shall be taken as necessary.

3.4 Flammable atmosphere

3.4.1 Dust of some solid bulk cargoes may constitute an explosion hazard, especially while loading, unloading and cleaning. This risk can be minimized by ventilating to prevent the formation of a dust-laden atmosphere and by hosing down rather than sweeping.

3.4.2 Some cargoes may emit flammable gases in sufficient quantities to constitute a fire or explosion hazard. Where this is indicated in the cargo schedule in this Code or by the cargo information provided by the shipper, the cargo spaces shall be effectively ventilated as necessary. The atmosphere in the cargo spaces shall be monitored by means of an appropriate gas detector. Due consideration shall be paid to the ventilation and monitoring of the atmosphere in the enclosed spaces adjacent to the cargo spaces.

3.5 Ventilation

3.5.1 Unless expressly provided otherwise, when cargoes which may emit toxic gases are carried, the cargo spaces shall be provided with mechanical or natural ventilation; and, when cargoes which may emit flammable gases are carried, the cargo spaces shall be provided with mechanical ventilation.

3.5.2 If maintaining ventilation would endanger the ship or the cargo, it may be interrupted unless this would produce a risk of explosion.

3.5.3 When continuous ventilation is required by the schedule for the cargo in this Code or by the cargo information provided by the shipper, ventilation shall be maintained while the cargo is onboard, unless a situation develops where ventilation would endanger the ship.

3.5.4 Ventilation openings shall be provided in holds intended for the carriage of cargoes which require continuous ventilation. Such openings shall comply with the requirements of the Load Line Convention as amended for openings not fitted with means of closure.

3.5.5 Ventilation shall be such that any escaping hazardous gases, vapours or dust, cannot enter the accommodation or other interior spaces in hazardous concentrations. Due consideration shall be given to prevent escaping hazardous gases, vapours or dust from reaching enclosed work areas. Adequate precautions shall be taken to protect the personnel in these work areas.

3.5.6 When a cargo may heat spontaneously ventilation other than surface ventilation shall not be applied. On no account shall air be directed into the body of the cargo.

3.6 Cargo under in-transit fumigation

Fumigation shall be performed based on the recommendations developed by the Organization*.

* Refer to "Recommendations on the safe use of pesticides in ships applicable to the fumigation of cargo holds" approved by the Maritime Safety Committee by the document MSC.1/Circ.[…].

Section 4

Assessment of acceptability of consignments for safe shipment

4.1 Identification and classification

4.1.1 Each solid bulk cargo in this Code has been assigned a Bulk Cargo Shipping Name (BCSN). When a solid bulk cargo is carried by sea it shall be identified in the transport documentation by the BCSN. The BCSN shall be supplemented with the United Nations (UN) number when the cargo is dangerous goods.

4.1.2 If waste cargoes are being transported for disposal, or for processing for disposal, the name of the cargoes shall be preceded by the word "WASTE".

4.1.3 Correct identification of a solid bulk cargo facilitates identification of the conditions necessary to safely carry the cargo and the emergency procedures, if applicable.

4.1.4 Solid bulk cargoes shall be classified, where appropriate, in accordance with the UN Manual of Tests and Criteria, part III. The various properties of a solid bulk cargo required by this Code shall be determined, as appropriate to that cargo, in accordance with the test procedures approved by a competent authority in the country of origin, when such test procedures exist. In the absence of such test procedures, those properties of a solid bulk cargo shall be determined, as appropriate to that cargo, in accordance with the test procedures prescribed in appendix 2 to this Code.

4.2 Provision of information

4.2.1 The shipper shall provide the master or his representative with appropriate information on the cargo sufficiently in advance of loading to enable the precautions which may be necessary for proper stowage and safe carriage of the cargo to be put into effect.

4.2.2 Cargo information shall be confirmed in writing and by appropriate shipping documents prior to loading. The cargo information shall include:

- the BCSN when the cargo is listed in this Code. Secondary names may be used in addition to the BCSN;
- the cargo group (A&B, A, B, or C);
- the IMO Class of the cargo, if applicable;
- the UN number preceded by letters UN for the cargo, if applicable;
- the total quantity of the cargo offered;
- the stowage factor;
- the need for trimming and the trimming procedures, as necessary;

- the likelihood of shifting, including angle of repose, if applicable;

- additional information in the form of a certificate on the moisture content of the cargo and its transportable moisture limit in the case of a concentrate or other cargo which may liquefy;

- likelihood of formation of a wet base (see subsection 7.2.3 of this Code);

- toxic or flammable gases which may be generated by cargo, if applicable;

- flammability, toxicity, corrosiveness and propensity to oxygen depletion of the cargo, if applicable;

- self-heating properties of the cargo, and the need for trimming, if applicable;

- properties on emission of flammable gases in contact with water, if applicable;

- radioactive properties, if applicable; and

- any other information required by national authorities.

4.2.3 Information provided by the shipper shall be accompanied by a declaration. An example of a cargo declaration form is set out in the next page. The other form may be used for cargo declaration. As an aid to paper documentation, Electronic Data Processing (EDP) or Electronic Data Interchange (EDI) techniques may be used.

FORM FOR CARGO INFORMATION
for Solid Bulk Cargoes

BCSN	
Shipper	Transport document Number
Consignee	Carrier
Name/means of transport Port/place of departure	Instructions or other matters
Port/place of destination	
General description of the cargo (Type of material/particle size)*	Gross mass (kg/tonnes)
Specifications of bulk cargo, if applicable: Stowage factor: Angle of repose, if applicable: Trimming procedures: Chemical properties if potential hazard*: * e.g., Class & UN No. or "MHB"	
Group of the cargo ☐ Group A & B* ☐ Group A* ☐ Group B ☐ Group C	* For cargoes which may liquefy (Group A and Group A & B cargoes) Transportable Moisture Limit Moisture content at shipment
Relevant special properties of the cargo (e.g., highly soluble in water)	Additional certificate(s)* ☐ Certificate of moisture content and transportable moisture limit ☐ Weathering certificate ☐ Exemption certificate ☐ Other (specify) * If required
DECLARATION I hereby declare that the consignment is fully and accurately described and that the given test results and other specifications are correct to the best of my knowledge and belief and can be considered as representative for the cargo to be loaded.	Name/status, company/organization of signatory Place and date Signature on behalf of shipper

4.3 Certificates of test

4.3.1 To obtain the information required in 4.2.1 the shipper shall arrange for the cargo to be properly sampled and tested. The shipper shall provide the ship's master or his representative with the appropriate certificates of test, if required in this Code.

4.3.2 When a concentrate or other cargo which may liquefy is carried, the shipper shall provide the ship's master or his representative with a signed certificate of the TML, and a signed certificate or declaration of the moisture content. The certificate of TML shall contain, or be accompanied by the result of the test for determining the TML. The declaration of moisture content shall contain, or be accompanied by, a statement by the shipper that the moisture content is, to the best of his knowledge and belief, the average moisture content of the cargo at the time the declaration is presented to the master.

4.3.3 When a concentrate or other cargo which may liquefy is to be loaded into more than one cargo space of a ship, the certificate or the declaration of moisture content shall certify the moisture content of each type of finely grained material loaded into each cargo space. Notwithstanding this requirement, if sampling according to an internationally or nationally accepted standard procedures indicates that the moisture content is uniform throughout the consignment, then one certificate or declaration of average moisture content for all cargo spaces is acceptable.

4.3.4 Where certification is required by the individual schedules for cargoes possessing chemical hazards, the certificate shall contain, or be accompanied by, a statement from the shipper that the chemical characteristics of the cargo are, to the best of his knowledge, those present at the time of the ship's loading.

4.4 Sampling procedures

4.4.1 Physical property tests on the consignment are meaningless unless they are conducted prior to loading on truly representative test samples.

4.4.2 Sampling shall be conducted only by persons who have been suitably trained in sampling procedures and who are under the supervision of someone who is fully aware of the properties of the consignment and also the applicable principles and practices of sampling.

4.4.3 Prior to taking samples, and within the limits of practicability, a visual inspection of the consignment which is to form the ship's cargo shall be carried out. Any substantial portions of material which appear to be contaminated or significantly different in characteristics or moisture content from the bulk of the consignment shall be sampled and analysed separately. Depending upon the results obtained in these tests, it may be necessary to reject those particular portions as unfit for shipment.

4.4.4 Representative samples shall be obtained by employing techniques which take the following factors into account:

.1 the type of material;

.2 the particle size distribution;

.3 composition of the material and its variability;

.4 the manner in which the material is stored, in stockpiles, rail wagons or other containers, and transferred or loaded by material-handling systems such as conveyors, loading chutes, crane grabs, etc.;

.5 the chemical hazards (toxicity, corrosivity, etc.);

.6 the characteristics which have to be determined: moisture content, TML, bulk density/stowage factor, angle of repose, etc.;

.7 variations in moisture distribution throughout the consignment which may occur due to weather conditions, natural drainage, e.g., to lower levels of stockpiles or containers, or other forms of moisture migration; and

.8 variations which may occur following freezing of the material.

4.4.5 Throughout the sampling procedures, utmost care shall be taken to prevent changes in quality and characteristics. Samples shall be immediately placed in suitable sealed containers which are properly marked.

4.4.6 Unless expressly provided otherwise, sampling for the test required by this Code shall follow an internationally or nationally accepted standard procedure.

4.5 Interval between sampling/testing and loading for TML and moisture content determination

4.5.1 A test to determine the TML of a solid bulk cargo shall be conducted within six months to the date of loading the cargo. Notwithstanding this provision, where the composition or characteristics of the cargo are variable for any reason, a test to determine the TML shall be conducted again after it is reasonably assumed that such variation has taken place.

4.5.2 Sampling and testing for moisture content shall be conducted as near as practicable to the time of loading. If there has been significant rain or snow between the time of testing and loading, check tests shall be conducted to ensure that the moisture content of the cargo is still less than its TML. The interval between sampling/testing and loading shall never be more than seven days.

4.5.3 Samples of frozen cargo shall be tested for the TML or the moisture content after the free moisture has completely thawed.

4.6 Sampling procedures for concentrate stockpiles

4.6.1 It is not practicable to specify a single method of sampling for all consignments since the character of the material and the form in which it is available will affect the selection of the procedure to be used. In the absence of internationally or nationally accepted standard sampling procedures, the following sampling procedures for concentrate stockpiles may be used to determine the moisture content and the TML of mineral concentrates. These procedures are not intended to replace sampling procedures, such as the use of automatic sampling, that achieve equal or superior accuracy of either moisture content or TML.

4.6.2 Sub-samples are taken in a reasonably uniform pattern, where possible from a leveled stockpile.

4.6.3 A plan of the stockpile is drawn and divided into areas, each of which contains approximately 125 t, 250 t or 500 t depending on the amount of concentrate to be shipped. Such a plan will indicate the number of sub-samples required and where each is to be taken. Each sub-sample taken is drawn from approximately 50 cm below the surface of the designated area.

4.6.4 The number of sub-samples and sample size are given by the competent authority or determined in accordance with the following scale:

Consignments of not more than 15,000 t:

One 200 g sub-sample is taken for each 125 t to be shipped.

Consignments of more than 15,000 but not more than 60,000 t:

One 200 g sub-sample is taken for each 250 t to be shipped.

Consignments of more than 60,000 t:

One 200 g sub-sample is taken for each 500 t to be shipped.

4.6.5 Sub-samples for moisture content determination are placed in sealed containers (such as plastic bags, cans, or small metallic drums) immediately on withdrawal for conveyance to the testing laboratory, where they are thoroughly mixed in order to obtain a fully representative sample. Where testing facilities are not available at the testing site, such mixing is done under controlled conditions at the stockpile and the representative sample placed in a sealed container and shipped to the test laboratory.

4.6.6 Basic procedural steps include:

.1 identification of consignment to be sampled;

.2 determination of the number of individual sub-samples and representative samples, as described in 4.6.4, which are required;

.3 determination of the positions from which to obtain sub-samples and the method of combining such sub-samples to arrive at a representative sample;

.4 gathering of individual sub-samples and placing them in sealed containers;

.5 thorough mixing of sub-samples to obtain the representative sample; and

.6 placing the representative sample in a sealed container if it has to be shipped to a test laboratory.

4.7 Examples of standardized sampling procedures, for information

ISO 3082: 1998	-	Iron ores – Sampling and sample preparation procedures
ISO 1988: 1975	-	Hard coal – Sampling
ASTMD2234-99	-	Standard Practice for Collection of a Gross Sample of Coal

Australian Standards

AS 4264.1	-	Coal and Coke-Sampling
	-	Part 1: Higher rank coal – Sampling Procedures
AS 1141 – Series	-	Methods of sampling and testing aggregates
BS.1017:1989	-	Methods of sampling coal and coke
BS 1017	-	British Standard Part 1: 1989 methods of sampling of coal
BS 1017	-	British Standard Part 2: 1994 methods of sampling of coal

Canadian Standard Sampling Procedure for Concentrate Stockpiles
European Communities Method of Sampling for the Control of Fertilizers

JIS M 8100	-	Japanese General Rules for Methods of Sampling Bulk Materials
JIS M 8100: 1992	-	Particulate cargoes – General Rules for Methods of Sampling

Polish Standard Sampling Procedure for:

Iron and Manganese Ores – Ref. No. PN-67/H-04000

Nonferrous Metals – Ref. No. PN-70/H-04900

Russian Federation Standard Sampling Procedure for the Determination of Moisture Content in Ore Concentrates.

4.8 Documentation required on board the ship carrying dangerous goods

4.8.1 Each ship carrying dangerous goods in solid form in bulk shall have a special list or manifest setting forth the dangerous goods on board and the location thereof, in accordance with SOLAS regulation VII/10.2. A detailed stowage plan, which identifies by class and sets out the location of all dangerous goods on board, may be used in place of such a special list or manifest.

4.8.2 When dangerous goods in solid form in bulk are carried appropriate instructions on emergency response to incidents involving the cargoes shall be on board.

4.8.3 Cargo ships of 500 gross tonnage and over constructed on or after 1 September 1984 and cargo ships of less than 500 gross tonnage constructed on or after 1 February 1992, subject to SOLAS regulation II-2/19.4 (or II-2/54.3), shall have a Document of Compliance when carrying dangerous goods in solid form in bulk except class 6.2 and class 7.

Section 5

Trimming procedures

5.1 General provisions for trimming

5.1.1 Trimming a cargo reduces the likelihood of the cargo shifting and minimizes the air entering the cargo, which could lead to spontaneous heating. To minimize these risks, cargoes shall be trimmed reasonably level, as necessary.

5.1.2 Cargo spaces shall be as full as practicable without resulting in excessive loading on the bottom structure or 'tween-deck to prevent sliding of a solid bulk cargo. Due consideration shall be given to the amount of a solid bulk cargo in each cargo space, taking into account the possibility of shifting and longitudinal moments and forces of the ship. Cargo shall be spread as widely as practicable to the boundary of the cargo space. Alternate hold loading restrictions, as required by SOLAS chapter XII, may also need to be taken into account.

5.1.3 The Master has the right to require that the cargo be trimmed level, where there is any concern regarding stability based upon the information available, taking into account the characteristics of the ship and the intended voyage.

5.2 Special provisions for multi-deck ships

5.2.1 When a solid bulk cargo is loaded only in lower cargo spaces, it shall be trimmed sufficiently to equalize the mass distribution on the bottom structure.

5.2.2 When solid bulk cargoes are carried in 'tween-decks, the hatchways of such 'tween-decks shall be closed in those cases where the loading information indicates an unacceptable level of stress of the bottom structure if the hatchways are left open. The cargo shall be trimmed reasonably level and shall either extend from side to side or be secured by additional longitudinal divisions of sufficient strength. The safe load-carrying capacity of the 'tween-decks shall be observed to ensure that the deck structure is not overloaded.

5.2.3 If coal cargoes are carried in 'tween decks, the hatchways of such 'tween-decks shall be tightly sealed to prevent air moving up through the body of the cargo in the 'tween decks.

5.3 Special provisions for cohesive bulk cargoes

5.3.1 All damp cargoes and some dry ones possess cohesion. For cohesive cargoes, the general provisions in subsection 5.1 shall apply.

5.3.2 The angle of repose is not an indicator of the stability of a cohesive bulk cargo and it is not included in the individual schedules for cohesive cargoes.

5.4 Special provisions for non-cohesive bulk cargoes

5.4.1 Non-cohesive bulk cargoes are those listed in paragraph 1 in appendix 3 and any other cargo not listed in the appendix exhibiting the properties of a non-cohesive material.

5.4.2 For trimming purposes, solid bulk cargoes can be categorized as cohesive or non-cohesive. The angle of repose is a characteristic of non-cohesive bulk cargoes which is indicative of cargo stability and has been included in the individual schedules for non-cohesive cargoes. The angle of repose of the cargoes shall establish which provisions of this section apply. Methods for determining the angle of repose are given in section 6.

5.4.3 Non-cohesive bulk cargoes having an angle of repose less than or equal to 30º.

These cargoes, which flow freely like grain, shall be carried according to the provisions applicable to the stowage of grain cargoes*. The bulk density of the cargo shall be taken into account when determining:

.1 the scantlings and securing arrangements of divisions and bin bulkheads; and

.2 the stability effect of free cargo surfaces.

* Reference is made to chapter VI of the SOLAS Convention, and the International Code for the Safe Carriage of Grain in Bulk adopted by the Maritime Safety Committee of the Organization by resolution MSC.23(59).

5.4.4 Non-cohesive bulk cargoes having an angle of repose greater than 30° to 35° inclusive.

These cargoes shall be trimmed according to the following criteria:

.1 the unevenness of the cargo surface measured as the vertical distance (Δh) between the highest and lowest levels of the cargo surface shall not exceed B/10, where B is the beam of the ship in metres, with a maximum allowable $\Delta h = 1.5$ m; or

.2 loading is carried out using trimming equipment approved by the competent authority.

5.4.5 Non-cohesive bulk cargoes having an angle of repose greater than 35°.

These cargoes shall be trimmed according to the following criteria:

.1 the unevenness of the cargo surface measured as the vertical distance (Δh) between the highest and lowest levels of the cargo surface shall not exceed B/10, where B is the beam of the ship in metres, with a maximum allowable $\Delta h = 2$m; or

.2 loading is carried out using trimming equipment approved by the competent authority.

Section 6

Methods of determining the angle of repose

6.1 General

An angle of repose of a non-cohesive solid bulk material shall be measured by a method approved by the appropriate authority as required by section 4.1.4 of this Code.

6.2 Recommended test methods

There are various methods in use to determine the angle of repose for non-cohesive solid bulk materials. The recommended test methods are listed below:

6.2.1 Tilting box method

This laboratory test method is suitable for non-cohesive granular materials with a grain size not greater than 10 mm. A full description of the equipment and procedure is given in subsection 2.1 of appendix 2.

6.2.2 Shipboard test method

In the absence of a tilting box apparatus, an alternative procedure for determining the approximate angle of repose is given in subsection 2.2 of appendix 2.

Section 7

Cargoes which may liquefy

7.1 Introduction

7.1.1 The purpose of this section is to bring to the attention of Masters and others with responsibilities for the loading and carriage of bulk cargoes, the risks associated with liquefaction and the precautions to minimize the risk. Such cargoes may appear to be in a relatively dry granular state when loaded, and yet may contain sufficient moisture to become fluid under the stimulus of compaction and the vibration which occurs during a voyage.

7.1.2 A ship's motion may cause a cargo to shift sufficiently to capsize the vessel. Cargo shift can be divided into two types, namely, sliding failure or liquefaction consequence. Trimming the cargo in accordance with section 5 can prevent sliding failure.

7.1.3 Some cargoes which may liquefy may also heat spontaneously.

7.2 Conditions for hazards

7.2.1 Group A cargoes contain a certain proportion of small particles and a certain amount of moisture. Group A cargoes may liquefy during a voyage even when they are cohesive and trimmed level. Liquefaction can result in cargo shift. This phenomenon may be described as follows:

.1 the volume of the spaces between the particles reduces as the cargo is compacted owing to the ship motion, etc.;

.2 the reduction in space between cargo particles causes an increase in water pressure in the space; and

.3 the increase in water pressure reduces the friction between cargo particles resulting in a reduction in the shear strength of the cargo.

7.2.2 Liquefaction does not occur when one of the following conditions is satisfied:

.1 the cargo contains very small particles. In this case particle movement is restricted by cohesion and the water pressure in spaces between cargo particles does not increase;

.2 the cargo consists of large particles or lumps. Water passes through the spaces between the particles and there is no increase in the water pressure. Cargoes which consist entirely of large particles will not liquefy;

.3 the cargo contains a high percentage of air and low moisture content. Any increase in the water pressure is inhibited. Dry cargoes are not liable to liquefy.

7.2.3 A cargo shift caused by liquefaction may occur when the moisture content exceeds the TML. Some cargoes are susceptible to moisture migration and may develop a dangerous wet base even if the average moisture content is less than the TML. Although the cargo surface may appear dry undetected liquefaction may take place resulting in shifting of the cargo.

Cargoes with high moisture content are prone to sliding particularly when the cargo is shallow and subject to large heel angles.

7.2.4 In the resulting viscous fluid state cargo may flow to one side of the ship with a roll but not completely return with a roll the other way. Consequently the ship may progressively reach a dangerous heel and capsize quite suddenly.

7.3 Provisions for cargoes which may liquefy

7.3.1 General

7.3.1.1 Concentrates or other cargoes which may liquefy shall only be accepted for loading when the actual moisture content of the cargo is less than its TML. Notwithstanding this provision, such cargoes may be accepted for loading on specially constructed or fitted cargo ships even when their moisture content exceeds the TML.

7.3.1.2 Cargoes which contain liquids other than packaged canned goods or the like shall not be stowed in the same cargo space above or adjacent to these solid bulk cargoes.

7.3.1.3 Adequate measures shall be taken to prevent liquids entering the cargo space in which these solid bulk cargoes are stowed during the voyage.

7.3.1.4 Masters shall be cautioned about the possible danger of using water to cool these cargoes while the ship is at sea. Introducing water may bring the moisture content of these cargoes to a flow state. When necessary, due regard shall be paid to apply water in the form of a spray.

7.3.2 Specially constructed or fitted cargo ships

7.3.2.1 Cargoes having a moisture content in excess of the TML shall only be carried in specially constructed cargo ships or in specially fitted cargo ships.

7.3.2.2 Specially constructed cargo ships shall have permanent structural boundaries, so arranged as to confine any shift of cargo to an acceptable limit. The ship concerned shall carry evidence of approval by the Administration.

7.3.2.3 Specially fitted cargo ships shall be fitted with specially designed portable divisions to confine any shift of cargo to an acceptable limit. Specially fitted cargo ships shall be in compliance with the following requirement:

.1 The design and positioning of such special arrangements shall adequately provide not only the restraint of the immense forces generated by the flow movement of high-density bulk cargoes, but also for the need to reduce to an acceptable safe level the potential heeling movements arising out of a transverse cargo flow across the cargo space. Divisions provided to meet these requirements shall not be constructed of wood.

.2 The elements of the ship's structure bounding such cargo shall be strengthened, as necessary.

.3 The plan of special arrangements and details of the stability conditions on which the design has been based shall have been approved by the Administration. The ship concerned shall carry evidence of approval by the Administration.

7.3.2.4 A submission made to an Administration for approval of such a ship shall include:

.1 relevant structural drawings, including scaled longitudinal and transverse sections;

.2 stability calculations, taking into account loading arrangements and possible cargo shift, showing the distribution of cargo and liquids in tanks, and of cargo which may become fluid; and

.3 any other information which may assist the Administration in the assessment of the submission.

Section 8

Test procedures for cargoes which may liquefy

8.1 General

For a Group A cargo, the actual moisture content and transportable moisture limit shall be determined in accordance with a procedure determined by the appropriate authority as required by section 4.1.4 of this Code, unless the cargo is carried in a specially constructed or fitted ship.

8.2 Test procedures for measurement of moisture content

There are recognized international and national methods for determining moisture content for various materials. Reference is made in paragraph 1.1.4.4 of appendix 2.

8.3 Methods for determining transportable moisture limit

The recommended methods for determining transportable moisture limit are given in appendix 2.

8.4 Complementary test procedure for determining the possibility of liquefaction

A ship's master may carry out a check test for approximately determining the possibility of flow on board ship or at the dockside by the following auxiliary method:

Half fill a cylindrical can or similar container (0.5 to 1 litre capacity) with a sample of the material. Take the can in one hand and bring it down sharply to strike a hard surface such as a solid table from a height of about 0.2 m. Repeat the procedure 25 times at one or two second intervals. Examine the surface for free moisture or fluid conditions. If free moisture or a fluid condition appears, arrangements should be made to have additional laboratory tests conducted on the material before it is accepted for loading.

Section 9

Materials possessing chemical hazards

9.1 General

Solid bulk cargoes which may possess a chemical hazard during transport, because of their chemical nature or properties, are in Group B. Some of these materials are classified as dangerous goods and others are materials hazardous only in bulk (MHB). It is essential to obtain current, valid information about the physical and chemical properties of the cargoes to be shipped in bulk, prior to loading.

9.2 Hazard classification

9.2.1 The classification of materials possessing chemical hazards and intended to be shipped in bulk under the requirements of this Code shall be in accordance with 9.2.2 and 9.2.3.

9.2.2 Classification of dangerous goods

SOLAS regulation VII/7 defines dangerous goods in solid form in bulk. For the purpose of this Code, dangerous goods shall be classified in accordance with chapter 2 of the IMDG Code.

9.2.2.1 Class 4.1: Flammable solids

The materials in this class are readily combustible solids and solids which may cause fire through friction.

9.2.2.2 Class 4.2: Substances liable to spontaneous combustion

The materials in this class are materials, other than pyrophoric materials, which, in contact with air without energy supply, are liable to self-heating.

9.2.2.3 Class 4.3: Substances which, in contact with water, emit flammable gases

The materials in this class are solids which, by interaction with water, are liable to become spontaneously flammable or to give off flammable gases in dangerous quantities.

9.2.2.4 Class 5.1: Oxidizing substances

The materials in this class are materials while in themselves not necessarily combustible, may, generally by yielding oxygen cause, or contribute to, the combustion of other material.

9.2.2.5 Class 6.1: Toxic substances

The materials in this class are materials liable either to cause death or serious injury or to harm human health if swallowed or inhaled, or by skin contact.

9.2.2.6 Class 7: Radioactive materials

The materials in this class are any materials containing radionuclides where both the activity concentration and the total activity in the consignment exceed the values specified in 2.7.7.2.1 to 2.7.7.2.6 of the IMDG Code.

9.2.2.7 Class 8: Corrosive substances

The materials in this class are materials which, by chemical action, will cause severe damage when in contact with living tissue or will materially damage, or even destroy, other goods or the means of transport.

9.2.2.8 Class 9: Miscellaneous dangerous substances and articles

The materials in this class are materials and articles which, during transport, present a danger not covered by other classes.

9.2.3 Materials Hazardous only in Bulk (MHB)

These are materials which may possess chemical hazards when transported in bulk other than dangerous goods.

9.3 Stowage and segregation requirements

9.3.1 General requirements

9.3.1.1 The potential hazards of the cargoes in Group B and falling within the classification of 9.2.2 and 9.2.3 entail the need for segregation of incompatible cargoes. Segregation shall also take account of any identified subsidiary risk.

9.3.1.2 In addition to general segregation as between whole classes of materials there may be a need to segregate a particular material from others. In the case of segregation from combustible materials this shall be understood not to include packaging material, ceiling or dunnage; the latter shall in these circumstances be kept to a minimum.

9.3.1.3 For the purpose of segregating incompatible materials, the words “hold” and “compartment” are deemed to mean a cargo space enclosed by steel bulkheads or shell plating and by steel decks. The boundaries of such a space shall be resistant to fire and liquid.

9.3.1.4 When two or more different solid bulk cargoes of Group B are to be carried, the segregation between them shall be in accordance with 9.3.4.

9.3.1.5 Where different grades of a solid bulk cargo are carried in the same cargo space, the most stringent segregation provisions applicable to any of the different grades shall apply to all of them.

9.3.1.6 When solid bulk cargoes of Group B and dangerous goods in packaged form are to be carried, the segregation between them shall be in accordance with 9.3.3.

9.3.1.7 Incompatible materials shall not be handled simultaneously. Upon completion of loading one such cargo, the hatch covers of every cargo space shall be closed and the decks cleaned of residue before the loading of other materials is commenced. When discharging, the same procedures shall be followed.

9.3.1.8 To avoid contamination, all foodstuffs shall be stowed:

.1 "separated from" a material which is indicated as toxic;

.2 "separated by a complete compartment or hold from" all infectious materials;

.3 "separated from" radioactive materials; and

.4 "away from" corrosive materials.

9.3.1.9 Materials which may evolve toxic gases in sufficient quantities to affect health shall not be stowed in those spaces from where such gases may penetrate into living quarters or ventilation systems connecting to living quarters.

9.3.1.10 Materials which present corrosive hazards of such intensity as to affect either human tissue or the ship's structure shall only be loaded after adequate precautions and protective measures have been taken.

9.3.1.11 After discharge of toxic or oxidizing cargoes, the spaces used for their carriage shall be inspected for contamination before being used for other cargoes. A space which has been contaminated shall be properly cleaned and examined before being used for other cargoes.

9.3.1.12 After discharge of cargoes, a close inspection shall be made for any residue which shall be removed before the ship is presented for other cargoes.

9.3.1.13 For cargoes for which in case of an emergency the hatches shall be opened, these hatches shall be kept free to be capable of being opened up.

9.3.2 Special requirements

9.3.2.1 Materials of classes 4.1, 4.2 and 4.3

9.3.2.1.1 Materials of these classes shall be kept as cool and dry as reasonably practicable and, unless expressly provided otherwise in this Code, shall be stowed "away from" all sources of heat or ignition.

9.3.2.1.2 Electrical fittings and cables shall be in good condition and properly safeguarded against short circuits and sparking. Where a bulkhead is required to be suitable for segregation purposes, cable and conduit penetrations of the decks and bulkheads shall be sealed against the passage of gas and vapour.

9.3.2.1.3 Cargoes liable to give off vapours or gases which can form an explosive mixture with air shall be stowed in a mechanically ventilated space.

9.3.2.1.4 Prohibition of smoking in dangerous areas shall be enforced, and clearly legible "NO SMOKING" signs shall be displayed.

9.3.2.2 Materials of class 5.1

9.3.2.2.1 Cargoes of this class shall be kept as cool and dry as reasonably practicable and, unless expressly provided otherwise in this Code, shall be stowed "away from" all sources of heat or ignition. They shall also be stowed "separated from" other combustible materials.

9.3.2.2.2 Before loading cargoes of this class, particular attention shall be paid to the cleaning of the cargo spaces into which they will be loaded. As far as reasonably practicable, non-combustible securing and protecting materials shall be used and only a minimum of dry wooden dunnage shall be used.

9.3.2.2.3 Precautions shall be taken to avoid the penetration of oxidizing materials into other cargo spaces, bilges and other spaces which may contain a combustible material.

9.3.2.3 Materials of class 7

9.3.2.3.1 Cargo spaces used for the transport of Low Specific Activity Materials (LSA-I) and Surface Contaminated Objects (SCO-I) shall not be used for other cargoes until decontaminated by a qualified person so that the non-fixed contamination on any surface when averaged over an area of 300 cm^2 does not exceed the following levels:

4 Bq/cm^2 (10^{-4} $\mu Ci/cm^2$)	for beta and gamma emitters and the low-toxicity alpha emitters; natural uranium; natural thorium; uranium-235 or uranium-238; thorium-232; thorium-228 and thorium-230 when contained in ores, physical or chemical concentrates; radionuclides with a half-life of less than 10 days; and
0.4 Bq/cm^2 (10^{-5} $\mu Ci/cm^2$)	for all other alpha emitters.

9.3.2.4 Materials of class 8 or materials having similar properties

9.3.2.4.1 These cargoes shall be kept as dry as reasonably practicable.

9.3.2.4.2 Prior to loading these cargoes attention shall be paid to the cleaning of the cargo spaces into which they will be loaded particularly to ensure that these spaces are dry.

9.3.2.4.3 Penetration of these materials into other cargo spaces, bilges, wells and between the ceiling boards shall be prevented.

9.3.2.4.4 Particular attention shall be paid to the cleaning of the cargo spaces after unloading, as residues of these cargoes may be highly corrosive to the ship's structure. Hosing down of the cargo spaces followed by careful drying shall be considered.

9.3.3 Segregation between bulk materials possessing chemical hazards and dangerous goods in packaged form

9.3.3.1 Unless otherwise required in this section or in the individual schedules, segregation between solid bulk cargoes of Group B and dangerous goods in packaged form shall be in accordance with the following table.

The Dangerous Goods List of the IMDG Code shall be consulted for additional requirements with regard to stowage and segregation of packaged dangerous goods.

	Dangerous goods in packaged form																
Bulk cargo (classified as dangerous goods)	Class	1.1 1.2 1.5	1.3	1.4	2.1	2.2 2.3	3	4.1	4.2	4.3	5.1	5.2	6.1	6.2	7	8	9
Flammable solids	4.1	4	3	2	2	2	2	X	1	X	1	2	X	3	2	1	X
Substances liable to spontaneous combustion	4.2	4	3	2	2	2	2	1	X	1	2	2	1	3	2	1	X
Substances which, in contact with water, emit flammable gases	4.3	4	4	2	1	X	2	X	1	X	2	2	X	2	2	1	X
Oxidizing substances (agents)	5.1	4	4	2	2	X	2	1	2	2	X	2	1	3	1	2	X
Toxic substances	6.1	2	2	X	X	X	X	X	1	X	1	1	X	1	X	X	X
Radioactive materials	7	2	2	2	2	2	2	2	2	2	1	2	X	3	X	2	X
Corrosive substances	8	4	2	2	1	X	1	1	1	1	2	2	X	3	2	X	X
Miscellaneous dangerous substances and articles	9	X	X	X	X	X	X	X	X	X	X	X	X	X	X	X	X
Materials Hazardous only in Bulk (MHB)		X	X	X	X	X	X	X	X	X	X	X	X	3	X	X	X

Numbers relate to the following segregation terms:

1 "Away from":
Effectively segregated so that incompatible materials cannot interact dangerously in the event of an accident but may be carried in the same hold or compartment or on deck provided a minimum horizontal separation of 3 metres, projected vertically, is provided.

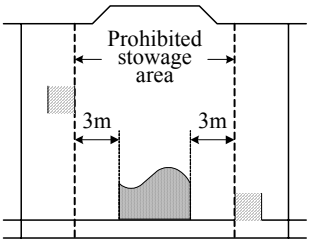

2 "Separated from":
In different holds when stowed under deck. Provided an intervening deck is resistant to fire and liquid, a vertical separation, i.e., in different compartments, may be accepted as equivalent to this segregation.

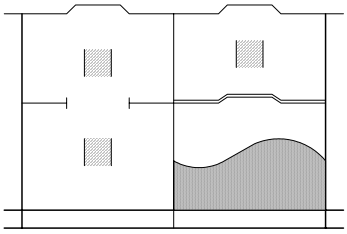

3 "Separated by a complete compartment or hold from":
Means either a vertical or a horizontal separation. If the decks are not resistant to fire and liquid, then only a longitudinal separation, i.e., by an intervening complete compartment, is acceptable.

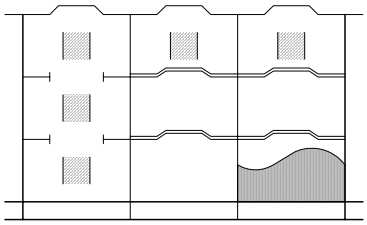

4 "Separated longitudinally by an intervening complete compartment or hold from":
Vertical separation alone does not meet this requirement.

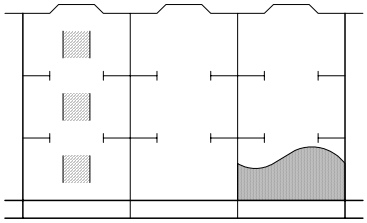

X Segregation, if any, is shown in the Dangerous Goods List of the IMDG Code or in the individual schedules in this Code.

Legend

Reference bulk material

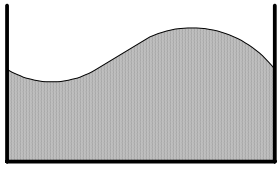

Packages containing incompatible goods

Deck resistant to liquid and fire

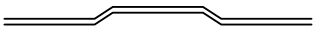

NOTE: Vertical lines represent transverse watertight bulkheads between cargo spaces.

9.3.4 Segregation between solid bulk cargoes possessing chemical hazards

Unless otherwise required in this section or in the individual schedules for cargoes of Group B, segregation between solid bulk cargoes possessing chemical hazards shall be according to the following table:

Solid bulk materials										
	Class	4.1	4.2	4.3	5.1	6.1	7	8	9	MHB
Flammable solids	4.1	X								
Substances liable to spontaneous combustion	4.2	2	X							
Substances which, in contact with water, emit flammable gases	4.3	3	3	X						
Oxidizing substances	5.1	3	3	3	X					
Toxic substances	6.1	X	X	X	2	X				
Radioactive materials	7	2	2	2	2	2	X			
Corrosive substances	8	2	2	2	2	X	2	X		
Miscellaneous dangerous substances and articles	9	X	X	X	X	X	2	X	X	
Materials Hazardous only in Bulk (MHB)	MHB	X	X	X	X	X	2	X	X	X

Numbers relate to the following segregation terms:

2 Separated from:

In different holds when stowed under deck. Provided an intervening deck is resistant to fire and liquid, a vertical separation, i.e., in different compartments, may be accepted as equivalent to this segregation.

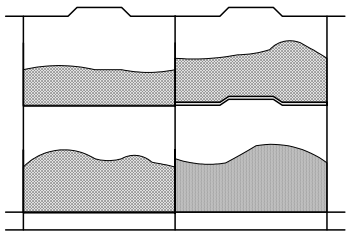

3 Separated by a complete compartment or hold from:

Either a vertical or a horizontal separation. If the decks are not resistant to fire and liquid, then only a longitudinal separation, i.e., by an intervening complete compartment, is acceptable.

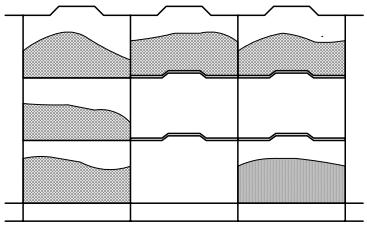

X Segregation, if any, is shown in the individual schedules in this Code.

Legend

Reference bulk material

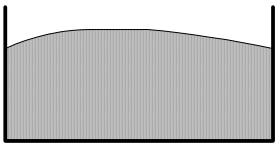

Incompatible bulk material

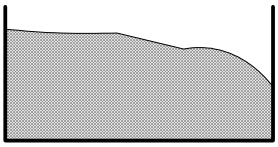

Deck resistant to liquid and fire

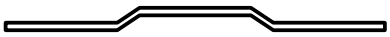

NOTE: Vertical lines represent transverse watertight bulkheads between cargo spaces.

Section 10

Transport of solid wastes in bulk

10.1 Preamble

10.1.1 The transboundary movement of wastes represents a threat to human health and to the environment.

10.1.2 Wastes shall be carried in accordance with the relevant international recommendations and conventions and in particular, where it concerns transport in bulk by sea, with the provisions of this Code.

10.2 Definitions

10.2.1 *Wastes*, for the purpose of this section, means solid bulk cargoes containing or contaminated with one or more constituents which are subject to the provisions of this Code applicable to cargoes of classes 4.1, 4.2, 4.3, 5.1, 6.1, 8 or 9 for which no direct use is envisaged but which are carried for dumping, incineration or other methods of disposal.

10.2.2 *Transboundary movement of waste* means any shipment of wastes from an area under the national jurisdiction of one country to or through an area under the national jurisdiction of another country, or to or through an area not under the national jurisdiction of any country provided at least two countries are involved in the movement.

10.3 Applicability

10.3.1 The provisions of this section are applicable to the transport of wastes in bulk by ships and shall be considered in conjunction with all other provisions of this Code.

10.3.2 Solid cargoes containing or contaminated with radioactive materials are subject to the provisions applicable to the transport of radioactive materials and are not to be considered as wastes for the purposes of this section.

10.4 Transboundary movements under the Basel Convention*

* Basel Convention on the Control of Transboundary Movements of Hazardous Wastes and their Disposal (1989).

Transboundary movement of wastes is permitted to commence only when:

.1 notification has been sent by the competent authority of the country of origin, or by the generator or exporter through the channel of the competent authority of the country of origin, to the country of final destination; and

.2 the competent authority of the country of origin, having received the written consent of the country of final destination stating that the wastes will be safely incinerated or treated by other methods of disposal, has given authorization for the movement.

10.5 Documentation

In addition to the required documentation for the transport of solid bulk cargoes all transboundary movements of wastes shall be accompanied by a waste movement document from the point at which a transboundary movement commences to the point of disposal. This document shall be available at all times to the competent authorities and to all persons involved in the management of waste transport operations.

10.6 Classification of wastes

10.6.1 A waste containing only one constituent which is a cargo subject to the provisions of this Code applicable to cargoes of classes 4.1, 4.2, 4.3, 5.1, 6.1, 8 or 9 shall be regarded as being that particular cargo. If the concentration of the constituent is such that the waste continues to present a hazard inherent in the constituent itself, it shall be classified as the class applicable to that constituent.

10.6.2 A waste containing two or more constituents which are cargoes subject to the provisions of this Code applicable to cargoes of classes 4.1, 4.2, 4.3, 5.1, 6.1, 8 or 9 shall be classified under the applicable class in accordance with their dangerous characteristics and properties as described in 10.6.3 and 10.6.4.

10.6.3 The classification according to dangerous characteristics and properties shall be carried out as follows:

.1 determination of the physical and chemical characteristics and physiological properties by measurement or calculation followed by classification according to the criteria applicable to the constituents; or

.2 if the determination is not practicable, the waste shall be classified according to the constituent presenting the predominant hazard.

10.6.4 In determining the predominant hazard, the following criteria shall be taken into account:

.1 if one or more constituents fall within a certain class and the waste presents a hazard inherent in these constituents, the waste shall be included in that class; or

.2 if there are constituents falling under two or more classes, the classification of the waste shall take into account the order of precedence applicable to cargoes with multiple hazards set out in the IMDG Code.

10.7 Stowage and handling of wastes

Wastes shall be stowed and handled in accordance with the provisions of sections 1 to 9 of this Code and with any additional provisions included in the individual schedules for cargoes in Group B applicable to the constituents presenting the hazards.

10.8 Segregation

Wastes shall be segregated in accordance with the provisions of 9.3.3 and 9.3.4, as appropriate.

10.9 Accident procedures

In the event that, during transport, a waste will constitute a danger for the carrying ship or the environment, the Master shall immediately inform the competent authorities of the countries of origin and destination and receive advice on the action to be taken.

Section 11

Security Provisions

Introductory note

The provisions of this section address the security of bulk cargoes in transport by sea. It should be borne in mind that some substances shipped as bulk cargo may through their intrinsic nature, or when shipped in combination with other substances, be used as constituents for, or enhance the effect of weapons used in the commission of unlawful acts. (It should also be borne in mind that ships used to carry bulk cargoes may also be used as a means to transport unauthorized weapons, incendiary devices or explosives, irrespective of the nature of the cargo carried.) National competent authorities may apply additional security provisions, which should be considered when offering or transporting bulk cargoes. The provisions of this chapter remain recommendatory except subsection 11.1.1.

11.1 General provisions for companies, ships and port facilities

11.1.1 The relevant provisions of chapter XI-2 of SOLAS 74, as amended, and of part A of the ISPS Code shall apply to companies, ships and port facilities engaged in the handling and transport of bulk cargoes and to which regulation XI-2 of SOLAS 74, as amended, apply taking into account the guidance given in part B of the ISPS Code.

11.1.2 Due regard should be given to the security-related provisions of the ILO/IMO Code of practice on security in ports and the IMDG Code, as appropriate.

11.1.3 Any shore-based company personnel, ship based personnel and port facility personnel engaged in the handling and transport of bulk cargoes should be aware of any security requirements for such cargoes, in addition to those specified in the ISPS Code, and commensurate with their responsibilities.

11.1.4 The training of the company security officer, shore-based company personnel having specific security duties, port facility security officer and port facility personnel having specific duties, engaged in the handling and transport of bulk cargoes, should also include elements of security awareness related to the nature of those cargoes, for example where such cargoes are materials hazardous only in bulk.

11.1.5 All shipboard personnel and port facility personnel who are not mentioned in subsection 11.1.4 and are engaged in the transport of bulk cargoes should be familiar with the provisions of the relevant security plans related to those cargoes, commensurate with their responsibilities.

11.2 General provisions for shore-side personnel

11.2.1 For the purpose of this subsection, *Shore-side personnel* covers individuals such as those who:

- prepare transport documents for bulk cargoes;
- offer bulk cargoes for transport;
- accept bulk cargoes for transport;

- handle bulk cargoes;
- prepare bulk cargoes loading/stowage plans;
- load/unload bulk cargoes into/from ships; and
- enforce or survey or inspect for compliance with applicable rules and – regulations; or are otherwise involved in the handling and transport of bulk cargoes as determined by the competent authority.

However, the provisions of subsection 11.2 do not apply to:

- the company security officer and appropriate shore-based company personnel mentioned in section A/13.1 of the ISPS Code;
- the ship security officer and the shipboard personnel mentioned in sections A/13.2 and A/13.3 of the ISPS Code; and
- the port facility security officer, the appropriate port facility security personnel and the port facility personnel having specific security duties mentioned in sections A/18.1 and A/18.2 of the ISPS Code.

For the training of those officers and personnel, refer to the ISPS Code.

11.2.2 Shore-side personnel engaged in transport by sea of bulk cargoes should consider security provisions for the transport of bulk cargoes commensurate with their responsibilities.

11.2.3 Security training

11.2.3.1 The training of shore-side personnel should also include elements of security awareness, the need to control access to cargoes and ships, and general guidance on the types of bulk cargoes of security significance.

11.2.3.2 Security awareness training should address the nature of security risks, recognizing security risks, methods to address and reduce risks and actions to be taken in the event of a security breach. It should include awareness of security plans (if appropriate, refer to subsection 11.3), commensurate with the responsibilities of individuals and their part in implementing security plans.

11.2.3.3 Such training should be provided or verified upon employment in a position involving transport of bulk cargoes by sea and should be periodically supplemented with retraining.

11.2.3.4 Records of all security training undertaken should be kept by the employer and made available to the employee if requested.

11.3 Provisions for bulk cargoes with high potential security implications

11.3.1 For the purposes of this subsection, high consequence bulk cargoes with high potential security implications are those which have the potential for misuse in an unlawful act and which may, as a result, produce serious consequences such as mass casualties or mass destruction, for example, Class 5.1 ammonium nitrate UN 1942 and ammonium nitrate fertilizers UN 2067.

11.3.2 The provisions of this subsection do not apply to ships and to port facilities (see the ISPS Code for ship security plan and for port security plan).

11.3.3 Consignors and others engaged in the transport of bulk cargoes with high potential security implications should adopt, implement and comply with a security plan that addresses at least the elements specified in subsection 11.3.4.

11.3.4 The security plan should comprise at least the following elements:

.1 specific allocation of responsibilities for security to competent and qualified persons with appropriate authority to carry out their responsibilities;

.2 records of bulk cargoes with high potential security implications or types of bulk cargoes with high potential security implications transported;

.3 review of current operations and assessment of vulnerabilities, including intermodal transfer, temporary transit storage, handling and distribution, as appropriate;

.4 clear statements of measures, including training, policies (including response to higher threat conditions, new employee/employment verification, etc.), operating practices (e.g., choice/use of routes where known, control of access to ships, bulk cargo storage and loading areas, proximity to vulnerable infrastructure, etc.), equipment and resources that are to be used to reduce security risks;

.5 effective and up to date procedures for reporting and dealing with security threats, breaches of security or security-related incidents;

.6 procedures for the evaluation and testing of security plans and procedures for periodic review and update of the plans;

.7 measures to ensure the security of transport information contained in the plan; and

.8 measures to ensure that the distribution of transport information is limited as far as possible.

Section 12

Stowage factor conversion tables

12.1 Cubic metres per metric tonne to cubic feet per long ton (2240 lb, 1016 kg)

Factor: 1 m^3/t = 35.87 ft^3/ton (rounded to the nearest hundredth of a ft^3/ton)

m^3/t	0.00	0.01	0.02	0.03	0.04	0.05	0.06	0.07	0.08	0.09
0.0	-	0.36	0.72	1.08	1.43	1.79	2.15	2.51	2.87	3.23
0.1	3.59	3.95	4.30	4.66	5.02	5.38	5.74	6.10	6.46	6.82
0.2	7.17	7.53	7.89	8.25	8.61	8.97	9.33	9.68	10.04	10.40
0.3	10.76	11.12	11.48	11.84	12.20	12.55	12.91	13.27	13.63	13.99
0.4	14.35	14.71	15.07	15.42	15.78	16.14	16.50	16.86	17.22	17.58
0.5	17.94	18.29	18.65	19.01	19.37	19.73	20.09	20.45	20.80	21.16
0.6	21.52	21.88	22.24	22.60	22.96	23.32	23.67	24.03	24.39	24.75
0.7	25.11	25.47	25.83	26.19	26.54	26.90	27.26	27.62	27.98	28.34
0.8	28.70	29.05	29.41	29.77	30.13	30.49	30.85	31.21	31.57	31.92
0.9	32.28	32.64	33.00	33.36	33.72	34.08	34.44	34.79	35.15	35.51
1.0	35.87	36.23	36.59	36.95	37.31	37.66	38.02	38.38	38.74	39.10
1.1	39.46	39.82	40.17	40.53	40.89	41.25	41.61	41.97	42.33	42.69
1.2	43.04	43.40	43.76	44.12	44.48	44.84	45.20	45.56	45.91	46.27
1.3	46.63	46.90	47.35	47.71	48.07	48.43	48.78	49.14	49.50	49.86
1.4	50.22	50.58	50.94	51.29	51.65	52.01	52.37	52.73	53.09	53.45
1.5	53.81	54.16	54.52	54.88	55.24	55.60	55.96	56.32	56.67	57.03
1.6	57.39	57.75	58.11	58.47	58.83	59.19	59.54	59.90	60.26	60.62

ft^3/ton

12.2 Cubic feet per long ton (ft^3/ton) (2240 lb, 1016 kg) to cubic metres per metric tonne (m^3/t) (2204 lb, 1000 kg)

Factor: 1 ft^3/ton = 0.02788 m^3/t (rounded to the nearest ten thousandth of a m^3/t)

ft^3/ton	0	1	2	3	4	5	6	7	8	9
0	-	0.0279	0.0558	0.0836	0.1115	0.1394	0.1676	0.1952	0.2230	0.2509
10	0.2788	0.3067	0.3346	0.3624	0.3903	0.4182	0.4461	0.4740	0.5018	0.5297
20	0.5576	0.5855	0.6134	0.6412	0.6691	0.6970	0.7249	0.7528	0.7806	0.8085
30	0.8364	0.8643	0.8922	0.9200	0.9479	0.9758	1.0037	1.0316	1.0594	1.0873
40	1.1152	1.1431	1.1710	1.1988	1.2267	1.2546	1.2825	1.3104	1.3382	1.3661
50	1.3940	1.4219	1.4498	1.4776	1.5055	1.5334	1.5613	1.5892	1.6170	1.6449
60	1.6728	1.7007	1.7286	1.7564	1.7843	1.8122	1.8401	1.8680	1.8958	1.9237
70	1.9516	1.9795	2.0074	2.0352	2.0631	2.0910	2.1189	2.1468	2.1746	2.2025
80	2.2304	2.2583	2.2862	2.3140	2.3419	2.3698	2.3977	2.4256	2.4534	2.4818
90	2.5092	2.5371	2.5650	2.5928	2.6207	2.6486	2.6765	2.7044	2.7322	2.7601
100	2.7880	2.8159	2.8438	2.8716	2.8995	2.9274	2.9553	2.9832	3.0110	3.0389

m^3/t

Section 13

References to Related Information and Recommendations

13.1 General

This section lists the references to the IMO instruments relevant to the requirements in this Code. It should be noted that this listing is not exhaustive.

13.2 Reference List

The references to the subsections in this Code, references to the relevant IMO instruments and subjects are in the following tables. Column 1 contains the references to the subsection numbers in this Code. Column 2 contains the references to the relevant IMO Instruments. Column 3 identifies the relevant subjects.

Reference to subsections in this Code (1)	Reference to the relevant IMO instruments (2)	Subject (3)

13.2.1 Dangerous goods & Classification

9.2	IMDG Code (SOLAS VII/1.1) SOLAS VII/1.2	Classification of Dangerous Goods

13.2.2 Stability

2.1.3	SOLAS II-1/5-1	Stability information
2.1.3	SOLAS VI/8.1	Stability information
2.1.3	SOLAS VI/9.2.1	Stability information
2.1.3	SOLAS VI/9.4	Loading and trimming of bulk cargoes
2.1.3	SOLAS XII/8	Stability information

* A reference to a provision in the SOLAS Convention is given in the form chapter/regulation. For example, SOLAS regulation II-1/5-1 means regulation 5-1 in chapter II-1 of the Convention.

13.2.3 Fire extinguishing arrangements

General Group B*	SOLAS II-2/10.7	Fire extinguishing arrangements in cargo spaces
General	FSS Code Chapter 9	Fixed fire detection and fire alarm systems
General	FSS Code Chapter 10	Sample extraction smoke detection systems
Group B	SOLAS II-2/19	Special requirements for ships carrying dangerous goods
Group A, B and C	MSC/Circ.1146	List of solid bulk cargoes for which a fixed gas fire-extinguishing system may be exempted

* Group A, B and C in the table means cargoes in Group A, B and C, respectively.

13.2.4 Ventilation

General Group B	International Convention on Loadlines 1966, Annex I, regulation 19	Ventilation openings
General Group B	SOLAS II-2/9.7	Ventilation systems
General Group B	SOLAS II-2/19.3.4	Ventilation for ships carrying dangerous goods

13.2.5 Personnel protection

General Group B	IMO/WHO/ILO Medical First Aid Guide for Use in Accidents Involving Dangerous Goods (MFAG)	First aid measures
General Group B	SOLAS II-2/10.10 and FSS Code chapter 3	Fire-fighter's outfit
General Group B	SOLAS II-2/19.3.6.1 and FSS Code chapter 3	Protective clothing
General Group B	SOLAS II-2/19.3.6.2 and FSS Code chapter 3	Self-contained breathing apparatus

13.2.6 Gas detection

General	SOLAS VI/5	Oxygen analysis and gas detection equipment.
General	Recommendations on the safe use of pesticides in ships applicable to the fumigation of cargo holds (MSC.1/Circ.[…]), section 3.	Gas detection equipment for fumigation

13.2.7 Minimum information/Documentation

4.7.3	SOLAS II-2/19.4	Document of compliance for carriage of dangerous goods
4.2	SOLAS VI/4	Cargo information
4.2	SOLAS XII/10 SOLAS XII/8	Density of bulk cargoes Cargo restrictions and other information
4.2	SOLAS VI/9.2	Stability and other information on ships
4.2	SOLAS VII/10	Documentation for solid bulk dangerous goods

13.2.8 Insulation of machinery space boundaries

Group B	SOLAS II-2/3.2, 3.4, 3.10	Definitions of "A", "B" and "C" class divisions
Group B	SOLAS II-2/9.2	Fire integrity of bulkheads and decks
Group B	SOLAS II-2/19	Insulation requirement ("A-60")

13.2.9 Fumigation

3.6	Recommendations on the safe use of pesticides in ships applicable to the fumigation of cargo holds (MSC.1/Circ.[…]), section 3.	Fumigation, application of fumigation, fumigants, safety precautions
3.6	SOLAS VI/6	Use of pesticides in ships

13.2.10 Segregation

9.4	SOLAS VII/11	Stowage and segregation requirement
9.4	IMDG Code, chapter 7.2.6	Segregation between bulk materials possessing chemical hazards and dangerous goods in packaged form

13.2.11 Transport of solid wastes in bulk

10.4	Basel Convention on the Control of Transboundary Movements of Hazardous Wastes and their Disposal (1989)	Permitted Transboundary movement of wastes
10.6	IMDG Code, chapter 7.8.4	Classification of waste materials

13.2.12 Entering enclosed spaces

3.2.5	MSC/Circ.744, 14 June 1996	Recommendations for Entering enclosed spaces aboard ships

13.2.13 Avoidance of excessive stresses

2.1.2	SOLAS XII/5 & 6	Structural strength
2.1.2	SOLAS XII/11	Loading instrument

APPENDIX 1

INDIVIDUAL SCHEDULES OF SOLID BULK CARGOES

ALFALFA

DESCRIPTION
Material derived from dried alfalfa grass. Shipped in the form of meal, pellets, etc. Requires a certificate from a competent authority or shipper stating that the material as shipped does not meet the requirements for seed cake. Shipments, which do meet the oil and moisture criteria for seed cake, should comply with the requirements for seed cake (a) UN 1386, seed cake (b) UN 1386 or seed cake UN 2217.

CHARACTERISTICS

ANGLE OF REPOSE	BULK DENSITY (kg/m^3)	STOWAGE FACTOR (m^3/t)
Not applicable	508 to 719	139 to 1.97
SIZE	**CLASS**	**GROUP**
Fine Powder	Not applicable	C

HAZARD
No special hazards.
This cargo is non-combustible or has a low fire-risk.

STOWAGE & SEGREGATION
No special requirements.

HOLD CLEANLINESS
No special requirements.

WEATHER PRECAUTIONS
This cargo shall be kept as dry as practicable. This cargo shall not be handled during precipitation. During handling of this cargo all non-working hatches of the cargo spaces into which this cargo is loaded or to be loaded shall be closed.

LOADING
Trim in accordance with the relevant provisions required under sections 4 and 5 of the Code.

PRECAUTIONS
No special requirements.

VENTILATION
No special requirements.

CARRIAGE
No special requirements.

DISCHARGE
No special requirements.

CLEAN UP
No special requirements.

ALUMINA

DESCRIPTION
Alumina is a fine, white odourless powder with little or no moisture. Insoluble in organic liquids. Moisture content: 0% to 5%. If wet, alumina is unpumpable. This cargo is insoluble in water.

CHARACTERISTICS

ANGLE OF REPOSE	BULK DENSITY (kg/m^3)	STOWAGE FACTOR (m^3/t)
Not applicable	781 to 1087	0.92 to 1.28
SIZE	**CLASS**	**GROUP**
Fine Powder	Not applicable	C

HAZARD
Alumina dust is very abrasive and penetrating. Irritating to eyes and mucous membranes.
This cargo is non-combustible or has a low fire-risk.

STOWAGE & SEGREGATION
No special requirements.

HOLD CLEANLINESS
No special requirements.

WEATHER PRECAUTIONS
This cargo shall be kept as dry as practicable. This cargo shall not be handled during precipitation. During handling of this cargo all non-working hatches of the cargo spaces into which this cargo is loaded or to be loaded shall be closed.

LOADING
Trim in accordance with the relevant provisions required under sections 4 and 5 of the Code.

PRECAUTIONS
Bilge wells shall be clean, dry and covered as appropriate, to prevent ingress of the cargo. Appropriate precautions shall be taken to protect machinery and accommodation spaces from the dust of the cargo. Bilge wells of the cargo spaces shall be protected from ingress of the cargo. Due consideration shall be paid to protect equipment from the dust of the cargo. Persons, who may be exposed to the dust of the cargo, shall wear goggles or other equivalent dust eye-protection and dust filter masks. Those persons shall wear protective clothing, as necessary.

VENTILATION
No special requirements.

CARRIAGE
No special requirements.

DISCHARGE
No special requirements.

CLEAN UP
The water used for the cleaning of the cargo spaces, after discharge of this cargo, shall not be pumped by the fixed bilge pumps. A portable pump shall be used, as necessary, to clear the cargo spaces of the water.

ALUMINA, CALCINED

DESCRIPTION
Light to dark grey in colour. No moisture content. This cargo is insoluble in water.

CHARACTERISTICS

ANGLE OF REPOSE	BULK DENSITY (kg/m^3)	STOWAGE FACTOR (m^3/t)
Not applicable	1639	0.61
SIZE	**CLASS**	**GROUP**
Small particles and lumps	Not applicable	C

HAZARD
No special hazards.
This cargo is non-combustible or has a low fire-risk.

STOWAGE & SEGREGATION
No special requirements.

HOLD CLEANLINESS
No special requirements.

WEATHER PRECAUTIONS
This cargo shall be kept as dry as practicable. This cargo shall not be handled during precipitation. During handling of this cargo all non-working hatches of the cargo spaces into which this cargo is loaded or to be loaded shall be closed.

LOADING
Trim in accordance with the relevant provisions required under sections 4 and 5 of the Code.

PRECAUTIONS
Appropriate precautions shall be taken to protect machinery and accommodation spaces from the dust of the cargo. Bilge wells of the cargo spaces shall be protected from ingress of the cargo. Due consideration shall be paid to protect equipment from the dust of the cargo. Persons, who may be exposed to the dust of the cargo, shall wear protective clothing, goggles or other equivalent dust eye-protection and dust filter masks, as necessary.

VENTILATION
No special requirements.

CARRIAGE
No special requirements.

DISCHARGE
No special requirements.

CLEAN UP

The water used for the cleaning of the cargo spaces, after discharge of this cargo, shall not be pumped by the fixed bilge pumps. A portable pump shall be used, as necessary, to clear the cargo spaces of the water.

ALUMINA SILICA

DESCRIPTION
White, consists of alumina and silica crystals. Low moisture content (1% to 5%).
Lumps 60%.
Coarse grained powder – 40%. This cargo is insoluble in water.

CHARACTERISTICS

ANGLE OF REPOSE	BULK DENSITY (kg/m^3)	STOWAGE FACTOR (m^3/t)
Not applicable	1429	0.70
SIZE	**CLASS**	**GROUP**
Not applicable	Not applicable	C

HAZARD
No special hazards.
This cargo is non-combustible or has a low fire-risk.

STOWAGE & SEGREGATION
No special requirements.

HOLD CLEANLINESS
No special requirements.

WEATHER PRECAUTIONS
This cargo shall be kept as dry as practicable. This cargo shall not be handled during precipitation. During handling of this cargo all non-working hatches of the cargo spaces into which this cargo is loaded or to be loaded shall be closed.

LOADING
Trim in accordance with the relevant provisions required under sections 4 and 5 of the Code.

PRECAUTIONS
Appropriate precautions shall be taken to protect machinery and accommodation spaces from the dust of the cargo. Bilge wells of the cargo spaces shall be protected from ingress of the cargo. Due consideration shall be paid to protect equipment from the dust of the cargo. Persons, who may be exposed to the dust of the cargo, shall wear protective clothing, goggles or other equivalent dust eye-protection and dust filter masks, as necessary.

VENTILATION
No special requirements.

CARRIAGE
No special requirements.

DISCHARGE
No special requirements.

CLEAN UP

The water used for the cleaning of the cargo spaces, after discharge of this cargo, shall not be pumped by the fixed bilge pumps. A portable pump shall be used, as necessary, to clear the cargo spaces of the water.

ALUMINA SILICA, Pellets

DESCRIPTION
White to off-white. No moisture content.

CHARACTERISTICS

ANGLE OF REPOSE	BULK DENSITY (kg/m^3)	STOWAGE FACTOR (m^3/t)
Not applicable	1190 to 1282	0.78 to 0.84
SIZE	**CLASS**	**GROUP**
Length: 6.4 mm to 25.4 mm Diameter: 6.4 mm	Not applicable	C

HAZARD
No special hazards.
This cargo is non-combustible or has a low fire-risk.

STOWAGE & SEGREGATION
No special requirements.

HOLD CLEANLINESS
No special requirements.

WEATHER PRECAUTIONS
This cargo shall be kept as dry as practicable. This cargo shall not be handled during precipitation. During handling of this cargo all non-working hatches of the cargo spaces into which this cargo is loaded or to be loaded shall be closed.

LOADING
Trim in accordance with the relevant provisions required under sections 4 and 5 of the Code.

PRECAUTIONS
Appropriate precautions shall be taken to protect machinery and accommodation spaces from the dust of the cargo. Bilge wells of the cargo spaces shall be protected from ingress of the cargo. Due consideration shall be paid to protect equipment from the dust of the cargo. Persons, who may be exposed to the dust of the cargo, shall wear protective clothing, goggles or other equivalent dust eye-protection and dust filter masks, as necessary.

VENTILATION
No special requirements.

CARRIAGE
No special requirements.

DISCHARGE
No special requirements.

CLEAN UP
No special requirements.

ALUMINIUM FERROSILICON POWDER UN 1395

DESCRIPTION
Fine powder or briquettes.

CHARACTERISTICS

ANGLE OF REPOSE	BULK DENSITY (kg/m^3)		STOWAGE FACTOR (m^3/t)
Not applicable	-		-
SIZE	**CLASS**	**SUBSIDIARY RISK**	**GROUP**
Not applicable	4.3	6.1	B

HAZARD
In contact with water may evolve hydrogen, a flammable gas which may form an explosive mixture in air. Impurities may, under similar conditions produce phosphine and arsine, which are highly toxic gases.

This cargo is non-combustible or has a low fire-risk.

STOWAGE & SEGREGATION
"Separated from" foodstuffs and all class 8 liquids.

HOLD CLEANLINESS
Clean and dry as relevant to the hazards of the cargo.

WEATHER PRECAUTIONS
This cargo shall be kept as dry as practicable. This cargo shall not be handled during precipitation. During handling of this cargo all non-working hatches of the cargo spaces into which this cargo is loaded or to be loaded shall be closed.

LOADING
Trim in accordance with the relevant provisions required under sections 4 and 5 of the Code.

PRECAUTIONS
Prior to loading this cargo, a certificate shall be provided by the manufacturer or shipper stating that the material was stored under cover, but exposed to the weather in the particle size to be shipped, for not less than 3 days prior to shipment. The bulkheads between the cargo spaces and the engine-room shall be gastight and shall be inspected and approved by the competent authority. During handling of this cargo, "NO SMOKING" signs shall be posted on decks and in areas adjacent to cargo spaces and no naked lights shall be permitted in these areas. At least two sets of self-contained breathing apparatus, in addition to those required by SOLAS regulation II-2/10.10, shall be provided on board.

VENTILATION
Continuous mechanical ventilation shall be conducted during the voyage for the cargo spaces carrying this cargo. If maintaining ventilation endangers the ship or the cargo, it may be interrupted unless there is a risk of explosion or other danger due to interruption of the ventilation. In any case mechanical ventilation shall be maintained for a reasonable period prior to discharge.

CARRIAGE
For quantitative measurements of hydrogen, phosphine and arsine and silane, suitable detectors for each gas or combination of gases shall be on board while this cargo is carried. The detectors shall be of certified safe type for use in explosive atmosphere. The concentrations of these gases in the cargo spaces carrying this cargo shall be measured regularly, during the voyage, and the results of the measurements shall be recorded and kept on board.

DISCHARGE
No special requirements.

CLEAN UP
After discharge of this cargo, the cargo spaces shall be swept clean twice. Water shall not be used for cleaning of the cargo space which has contained this cargo, because of danger of gas.

EMERGENCY PROCEDURES

SPECIAL EMERGENCY EQUIPMENT TO BE CARRIED Self-contained breathing apparatus.
EMERGENCY PROCEDURES Wear self-contained breathing apparatus. **EMERGENCY ACTION IN THE EVENT OF FIRE** Batten down and use CO_2 if available. **Do not use water**. **MEDICAL FIRST AID** Refer to the Medical First Aid Guide (MFAG), as amended.

ALUMINIUM NITRATE UN 1438

DESCRIPTION
Colourless or white crystals. Soluble in water.

CHARACTERISTICS

ANGLE OF REPOSE	BULK DENSITY (kg/m^3)	STOWAGE FACTOR (m^3/t)
Not applicable	-	-
SIZE	**CLASS**	**GROUP**
Not applicable	5.1	B

HAZARD
If involved in a fire will greatly intensify the burning of combustible materials and yield toxic nitrous fumes. Although non-combustible, mixtures with combustible material are easily ignited and may burn fiercely.

STOWAGE & SEGREGATION
"Separated from" foodstuffs.

HOLD CLEANLINESS
Clean and dry as relevant to the hazards of the cargo.

WEATHER PRECAUTIONS
This cargo shall be kept as dry as practicable. This cargo shall not be handled during precipitation. During handling of this cargo all non-working hatches of the cargo spaces into which this cargo is loaded or to be loaded shall be closed.

LOADING
Trim in accordance with the relevant provisions required under sections 4 and 5 of the Code.

PRECAUTIONS
Due regard shall be paid to prevent contact of the cargo and combustible materials.

VENTILATION
No special requirements.

CARRIAGE
No special requirements.

DISCHARGE
No special requirements.

CLEAN UP
No special requirements.

EMERGENCY PROCEDURES

SPECIAL EMERGENCY EQUIPMENT TO BE CARRIED Protective clothing (gloves, overalls, headgear). Self-contained breathing apparatus. Spray nozzles.
EMERGENCY PROCEDURES Wear protective clothing and self-contained breathing apparatus. **EMERGENCY ACTION IN THE EVENT OF FIRE** Use copious quantities of water, which is best applied in the form of a spray to avoid disturbing the surface of the material. The material may fuse or melt; in which condition application of water may result in extensive scattering of the molten materials. Exclusion of air or the use of CO_2 will not control the fire. Due consideration should be given to the effect on the stability of the ship due to accumulated water. **MEDICAL FIRST AID** Refer to the Medical First Aid Guide (MFAG), as amended.

ALUMINIUM SILICON POWDER, UNCOATED UN 1398

DESCRIPTION
Powder

CHARACTERISTICS

ANGLE OF REPOSE	BULK DENSITY (kg/m^3)	STOWAGE FACTOR (m^3/t)
Not applicable	-	-
SIZE	**CLASS**	**GROUP**
Not applicable	4.3	B

HAZARD
In contact with water may evolve hydrogen, a flammable gas which may form explosive mixtures with air. Impurities may, under similar circumstances, produce phosphine and arsine, which are highly toxic gases. May also evolve silanes, which are toxic and may ignite spontaneously.

This cargo is non-combustible or has a low fire-risk.

STOWAGE & SEGREGATION
"Separated from" foodstuffs and all class 8 liquids.

HOLD CLEANLINESS
Clean and dry as relevant to the hazards of the cargo.

WEATHER PRECAUTIONS
This cargo shall be kept as dry as practicable before loading, during loading and during voyage. This cargo shall not be loaded during precipitation. During loading of this cargo all non-working hatches of the cargo spaces to which this cargo are loaded or to be loaded shall be closed.

LOADING
Trim in accordance with the relevant provisions required under sections 4 and 5 of the Code.

PRECAUTIONS
Prior to loading this cargo, a certificate shall be provided by the manufacturer or shipper stating that the material was stored under cover, but exposed to the weather in the particle size to be shipped, for not less than 3 days prior to shipment. The bulkheads between the cargo spaces and the engine-room shall be gastight and shall be inspected and approved by the competent authority. During handling of this cargo, "NO SMOKING" signs shall be posted on decks and in areas adjacent to cargo spaces and no naked lights shall be permitted in these areas. This cargo shall be loaded in cargo spaces fitted with mechanical ventilation having at least two separate fans. The total ventilation shall be at least six air changes per hour, based on the empty space. At least two sets of self-contained breathing apparatus, in addition to those required by SOLAS regulation II-2/10.10, shall be provided on board.

VENTILATION
Continuous mechanical ventilation shall be conducted during the voyage for the cargo spaces carrying this cargo. If maintaining ventilation endangers the ship or the cargo, it may be interrupted unless there is a risk of explosion or other danger due to interruption of the ventilation. In any case mechanical ventilation shall be maintained for a reasonable period prior to discharge. Ventilation shall be arranged such that any escaping gases are minimized from reaching living quarters on or under the deck.

CARRIAGE
For quantitative measurements of hydrogen, phosphine, arsine, suitable detectors for each gas or combination of gases shall be on board while this cargo is carried. The detectors shall be of certified safe type for use in explosive atmosphere. The concentrations of these gases in the cargo spaces carrying this cargo shall be measured regularly, during the voyage, and the results of the measurements shall be recorded and kept on board.

DISCHARGE
No special requirements.

CLEAN UP
After discharge of this cargo, the cargo spaces shall be swept clean twice.
Water shall not be used for cleaning of the cargo space which has contained this cargo, because of danger of gas.

EMERGENCY PROCEDURES

SPECIAL EMERGENCY EQUIPMENT TO BE CARRIED Self-contained breathing apparatus.
EMERGENCY PROCEDURES Wear self-contained breathing apparatus. **EMERGENCY ACTION IN THE EVENT OF FIRE** Batten down and use CO_2 if available. **Do not use water.** **MEDICAL FIRST AID** Refer to the Medical First Aid Guide (MFAG), as amended.

ALUMINIUM SMELTING BY-PRODUCTS OR
ALUMINIUM REMELTING BY-PRODUCT UN 3170

DESCRIPTION
Aluminium smelting by-products are wastes from the aluminium manufacturing process. Grey or black powder or lumps with some metallic inclusions. The term encompasses various different waste materials, which include but are not limited to:

ALUMINIUM DROSS
ALUMINIUM SALT SLAGS
ALUMINIUM SKIMMINGS
SPENT CATHODES
SPENT POTLINER

CHARACTERISTICS

ANGLE OF REPOSE	BULK DENSITY (kg/m^3)	STOWAGE FACTOR (m^3/t)
Not applicable	1220	0.82
SIZE	**CLASS**	**GROUP**
Not applicable	4.3	B

HAZARD
Contact with water may cause heating with possible evolution of flammable and toxic gases such as hydrogen, ammonia and acetylene.
This cargo is non-combustible or has a low fire-risk.
Fire is unlikely but may follow an explosion of flammable gas and will be difficult to extinguish.
In port, flooding maybe considered, but due consideration should be given to stability.

STOWAGE & SEGREGATION
"Separated from" foodstuffs and all class 8 liquids.

HOLD CLEANLINESS
Clean and dry as relevant to the hazards of the cargo.

WEATHER PRECAUTIONS
This cargo shall be kept as dry as practicable. This cargo shall not be handled during precipitation. During handling of this cargo all non-working hatches of the cargo spaces into which this cargo is loaded or to be loaded shall be closed.

LOADING
Trim in accordance with the relevant provisions required under sections 4 and 5 of the Code.

PRECAUTIONS
Prior to loading this cargo, a certificate shall be provided by the manufacturer or shipper stating that, after manufacture, the material was stored under cover, but exposed to the weather in the particle size to be shipped, for not less than three days. Whilst the ship is alongside and the hatches of the cargo spaces containing this cargo are closed, the mechanical ventilation shall be operated continuously as weather permits. During handling of this cargo, "NO SMOKING" signs shall be posted on decks and in areas adjacent to cargo spaces and no naked lights shall be permitted in these areas. At least two self-contained breathing apparatus, in addition to those required by SOLAS regulation II-2/10.10, shall be provided on board. Bulkheads between the cargo spaces and the engine-room shall be gastight. Inadvertent pumping through machinery spaces shall be avoided.

VENTILATION
Continuous mechanical ventilation shall be conducted during the voyage for the cargo spaces carrying this cargo. If maintaining ventilation endangers the ship or the cargo, it may be interrupted unless there is a risk of explosion or other danger due to interruption of the ventilation. In any case mechanical ventilation shall be maintained for a reasonable period prior to discharge. Ventilation shall be arranged such that any escaping gases are minimized from reaching living quarters on or under the deck.

CARRIAGE
For quantitative measurements of hydrogen, ammonia and acetylene, suitable detectors for each gas or combination of gases shall be on board while this cargo is carried. The detectors shall be of certified safe type for use in explosive atmosphere. The concentrations of these gases in the cargo spaces carrying this cargo shall be measured regularly, during voyage, and the results of the measurements shall be recorded and kept on board. Suitable detectors for quantitative measurements of hydrogen, ammonia and acetylene should be on board. Regularly monitor for hydrogen, ammonia and acetylene. Record and keep the measurements.

DISCHARGE
No special requirements.

CLEAN UP
Water shall not be used for cleaning of the cargo space which has contained this cargo, because of danger of gas.

EMERGENCY PROCEDURES

SPECIAL EMERGENCY EQUIPMENT TO BE CARRIED

Nil

EMERGENCY PROCEDURES

Nil

EMERGENCY ACTION IN THE EVENT OF FIRE

Batten down and use CO_2 if available. **Do not use water**. If this proves ineffective, endeavour to stop fire from spreading and head for the nearest suitable port.

MEDICAL FIRST AID

Refer to the Medical First Aid Guide (MFAG), as amended.

AMMONIUM NITRATE UN 1942
with not more than 0.2% total combustible substances including any organic substance calculated as carbon, to the exclusion of any other added substance
(see AMMONIUM NITRATE BASED FERTILIZER UN 2067 & UN 2071)

DESCRIPTION
White crystals, prills or granules. Wholly or partly soluble in water. Supporters of combustion. Hygroscopic.

CHARACTERISTICS

ANGLE OF REPOSE	BULK DENSITY (kg/m^3)	STOWAGE FACTOR (m^3/t)
27° to 42°	1000	1.00
SIZE	**CLASS**	**GROUP**
1 to 4 mm	5.1	B

HAZARD
A major fire aboard a ship carrying these materials may involve a risk of explosion in the event of contamination (e.g., by fuel oil) or strong confinement. An adjacent detonation may also involve a risk of explosion. If heated strongly, this cargo decomposes, giving off toxic gases and gases which support combustion.
Ammonium nitrate dust might be irritating to skin and mucous membranes.
This cargo is hygroscopic and will cake if wet.

STOWAGE & SEGREGATION
There should be no sources of heat or ignition in the cargo space.
"Separated by a complete compartment or hold from" combustible materials (particularly liquids), chlorates, chlorides, chlorites, hypochlorites, nitrites, permanganates and fibrous materials (e.g., cotton, jute, sisal, etc.).
"Separated from" all other goods.
If the bulkhead between the cargo space and the engine-room is not insulated to class A-60 standard, this cargo shall be stowed "away from" the bulkhead.

HOLD CLEANLINESS
Clean and dry as relevant to the hazards of the cargo.

WEATHER PRECAUTIONS
This cargo shall be kept as dry as practicable. This cargo shall not be handled during precipitation. During handling of this cargo all non-working hatches of the cargo spaces into which this cargo is loaded or to be loaded shall be closed.

LOADING
Trim in accordance with the relevant provisions required under Sections 4 and 5 of the Code.

Prior to loading, the following provisions shall be complied with:

- This cargo shall not be accepted for loading when the temperature of the cargo is above 40°C.

- Prior to loading, the shipper *shall* provide the master with a certificate signed by the shipper stating that all the relevant conditions of the cargo required by this Code including this individual schedule have been met.
- The fuel tanks situated under the cargo spaces to be used for the transport of this cargo *shall* be pressure tested to ensure that there is no leakage of manholes and piping systems leading to the tanks.
- All electrical equipment, other than those of approved intrinsically safe type, in the cargo spaces to be used for this cargo shall be electrically disconnected from the power source, by appropriate means other than a fuse, at a point external to the space. This situation shall be maintained while the cargo is on board.
- Due consideration shall be paid to the possible need to open hatches in case of fire to provide maximum ventilation and to apply water in an emergency and the consequent risk to the stability of the ship through fluidization of the cargo.

During loading, the following provisions shall be complied with:

- Smoking shall not be allowed on deck and in the cargo spaces and. "NO SMOKING" signs shall be displayed while this cargo is on board.

- Bunkering of fuel oil shall not be allowed. Pumping of fuel oil in spaces adjacent to the cargo spaces for this cargo, other than the engine room, shall not be allowed.

- As far as reasonably practicable, combustible securing and protecting materials shall not be used. When wooden dunnage is necessary, only a minimum shall be used.

PRECAUTIONS

This cargo shall only be accepted for loading when the competent authority satisfied in regard to the resistance to detonation of this material based on the test*. Prior to loading, the shipper shall provide the master with a certificate stating that the resistance to detonation of this material is in compliance with this requirement. The master and officers shall note that a fixed gas fire-extinguishing system is ineffective on the fire involving this cargo and that applying water may be necessary. Pressure on the fire mains shall be maintained for fire-fighting and fire hoses shall be laid out or be in position and ready for immediate use during loading and discharging of this cargo. No welding, burning, cutting or other operations involving the use of fire, open flame, spark- or arc-producing equipment shall be carried out in the vicinity of the cargo spaces containing this cargo except in an emergency. Precautions shall be taken to avoid the penetration of this cargo into other cargo spaces, bilges and other enclosed spaces. Smoking shall not be allowed on deck and in the cargo spaces and "NO SMOKING" signs shall be displayed on deck whenever this cargo is on board. The hatches of the cargo spaces, whenever this material is on board, shall be kept free to be capable of being opened in case of an emergency. When the bulkhead between the cargo space and the engine-room is not insulated to class A-60 standard, this cargo shall not be accepted for loading unless the competent authority approves that the arrangement is equivalent.

Appropriate precautions shall be taken to protect machinery and accommodation spaces from the dust of the cargo. Bilge wells of the cargo spaces shall be protected from ingress of the cargo. Due consideration shall be paid to protect equipment from the dust of the cargo. Persons, who may be exposed to the dust of the cargo, shall wear goggles or other equivalent dust eye-protection and dust filter masks. Those persons shall wear protective clothing, as necessary.

Footnote: * Reference is made in section 5 of Appendix 2 to this Code.

VENTILATION
The cargo spaces carrying this cargo shall not be ventilated during voyage.

CARRIAGE
Hatches of the cargo spaces carrying this cargo shall be weathertight to prevent the ingress of water.

DISCHARGE
If this cargo has hardened, it shall be trimmed to avoid the formation of overhangs, as necessary. Bunkering or pumping of fuel oil shall not be allowed.

CLEAN UP
After discharge of this cargo, the bilge wells and the scuppers of the cargo spaces shall be checked and any blockage in the bilge wells and the scuppers shall be removed.

EMERGENCY PROCEDURES

SPECIAL EMERGENCY EQUIPMENT TO BE CARRIED Protective clothing (boots, gloves, coveralls, and headgear). Self-contained breathing apparatus.
EMERGENCY PROCEDURES Wear protective clothing and self-contained breathing apparatus. **EMERGENCY ACTION IN THE EVENT OF FIRE** Fire in a cargo space containing this material: Open hatches to provide maximum ventilation. Ship's fixed gas fire extinguishing will be inadequate. Use copious quantities of water. Flooding of the cargo space may be considered but due consideration should be given to stability. Fire in an adjacent cargo space: Open hatches to provide maximum ventilation. Heat transferred from fire in an adjacent space can cause the material to decompose with consequent evolution of toxic fumes. Dividing bulkheads should be cooled. **MEDICAL FIRST AID** Refer to the Medical First Aid Guide (MFAG), as amended.

AMMONIUM NITRATE BASED FERTILIZER UN 2067

DESCRIPTION
Crystals, granules or prills. Wholly or partly soluble in water. Hygroscopic.
Ammonium nitrate-based fertilizers classified as UN 2067 are uniform mixtures containing ammonium nitrate as the main ingredient within the following composition limits:

.1 not less than 90% ammonium nitrate with not more than 0.2% total combustible/organic material calculated as carbon and with added matter, if any, which is inorganic and inert towards ammonium nitrate; or

.2 less than 90% but more than 70% ammonium nitrate with other inorganic materials or more than 80% but less than 90% ammonium nitrate mixed with calcium carbonate and/or dolomite and not more than 0.4% total combustible/organic material calculated as carbon; or

.3 ammonium nitrate-based fertilizers containing mixtures of ammonium nitrate and ammonium sulphate with more than 45% but less than 70% ammonium nitrate and not more than 0.4% total combustible organic material calculated as carbon such that the sum of the percentage compositions of ammonium nitrate and ammonium sulphate exceeds 70%.

Notes:

1. All nitrate ions for which there is present in the mixture a molecular equivalent of ammonium ions should be calculated as ammonium nitrate.
2. The transport of ammonium nitrate materials which are liable to self-heating sufficient to initiate decomposition is prohibited.
3. This entry may only be used for substances that do not exhibit explosive properties of class 1 when tested in accordance to Test Series 1 and 2 of class 1 (see UN Manual of Tests and Criteria, part I).

CHARACTERISTICS

ANGLE OF REPOSE	BULK DENSITY (kg/m^3)	STOWAGE FACTOR (m^3/t)
27° to 42°	900 to 1200	0.83 to 1.11
SIZE	**CLASS**	**GROUP**
1 to 5 mm	5.1	B

HAZARD
Supports combustion. A major fire aboard a ship carrying these substances may involve a risk of explosion in the event of contamination (e.g., by fuel oil) or strong confinement. An adjacent detonation may involve a risk of explosion.
If heated strongly decomposes, risk of toxic fumes and gases which supports combustion, in the cargo space and on deck.
Fertilizer dust might be irritating to skin and mucous membranes.
This cargo is hygroscopic and will cake if wet.

STOWAGE AND SEGREGATION
"Separated by a complete compartment or hold from" combustible materials (particularly liquid), bromates, chlorates, chlorites, hypochlorites, nitrites, perchlorates, permanganates, powdered metals and vegetable fibres (e.g., cotton, jute, sisal, etc.);
"Separated from" all other goods;
"Separated from" sources of heat or ignition (see also Loading);
Not to be stowed immediately adjacent to any tank or double bottom containing fuel oil heated to more than 50°C.
If the bulkhead between the cargo space and the engine-room is not insulated to class A-60 standard, this cargo shall be stowed "away from" the bulkhead.

HOLD CLEANLINESS
Clean and dry as relevant to the hazards of the cargo.

WEATHER PRECAUTIONS
This cargo shall be kept as dry as practicable. This cargo shall not be handled during precipitation. During handling of this cargo all non-working hatches of the cargo spaces into which this cargo is loaded or to be loaded shall be closed.

LOADING
Trim in accordance with the relevant provisions required under sections 4 and 5 of the Code.

Prior to loading, the following provisions shall be complied with:

- This cargo shall not be accepted for loading when the temperature of the cargo is above 40°C.
- Prior to loading, the shipper shall provide the master with a certificate signed by the shipper stating that all the relevant conditions of the cargo required by this Code including this individual schedule have been met.
- The fuel tanks situated under the cargo spaces to be used for the transport of this cargo shall be pressure tested to ensure that there is no leakage of manholes and piping systems leading to the tanks.
- All electrical equipment, other than those of approved intrinsically safe type, in the cargo spaces to be used for this cargo shall be electrically disconnected from the power source, by appropriate means other than a fuse, at a point external to the space. This situation shall be maintained while the cargo is on board.
- Due consideration shall be paid to the possible need to open hatches in case of fire to provide maximum ventilation and to apply water in an emergency and the consequent risk to the stability of the ship through fluidization of the cargo.

During loading, the following provisions shall be complied with:

Bunkering of fuel oil shall not be allowed. Pumping of fuel oil in spaces adjacent to the cargo spaces for this cargo, other than the engine room, shall not be allowed.

- As far as reasonably practicable, combustible securing and protecting materials shall not be used. When wooden dunnage is necessary, only a minimum shall be used.

PRECAUTIONS
This cargo shall only be accepted for loading when the competent authority satisfied in regard to the resistance to detonation of this material based on the test*. Prior to loading, the shipper shall provide the master with a certificate stating that the resistance to detonation of this material is in compliance with this requirement. Pressure on the fire mains shall be maintained for fire-fighting and fire hoses shall be laid out or be in position and ready for immediate use during loading and discharging of this cargo. No welding, burning, cutting or other operations involving the use of fire, open flame, spark- or arc-producing equipment shall be carried out in the vicinity of the cargo spaces containing this cargo except in an emergency. Smoking shall not be allowed on deck and in the cargo spaces and "NO SMOKING" signs shall be displayed on deck whenever this cargo is on board. Precautions shall be taken to avoid the penetration of this cargo into other cargo spaces, bilges and other enclosed spaces. The hatches of the cargo spaces, whenever this material is on board, shall be kept free to be capable of being opened in case of an emergency.

Appropriate precautions shall be taken to protect machinery and accommodation spaces from the dust of the cargo. Bilge wells of the cargo spaces shall be protected from ingress of the cargo. Due consideration shall be paid to protect equipment from the dust of the cargo. Persons, who may be exposed to the dust of the cargo, shall wear goggles or other equivalent dust eye-protection and dust filter masks. Those persons shall wear protective clothing, as necessary.

Footnote: * Reference is made in section 5 of appendix 2 to this Code.

VENTILATION
The cargo spaces carrying this cargo shall not be ventilated during voyage.

CARRIAGE
Hatches of the cargo spaces carrying this cargo shall be weathertight to prevent the ingress of water. The temperature of this cargo shall be monitored and recorded daily during the voyage to detect decomposition resulting in spontaneous heating and oxygen depletion.

DISCHARGE
Bunkering or pumping of fuel oil shall not be allowed. If this cargo has hardened, it shall be trimmed to avoid the formation of overhangs, as necessary.

CLEAN UP
After discharge of this cargo, the bilge wells and the scuppers of the cargo spaces shall be checked and any blockage in the bilge wells and the scuppers shall be removed.

EMERGENCY PROCEDURES

SPECIAL EMERGENCY EQUIPMENT TO BE CARRIED

Protective clothing (boots, gloves, coveralls, and headgear).
Self-contained breathing apparatus.

EMERGENCY PROCEDURES

Wear protective clothing and self-contained breathing apparatus.

EMERGENCY ACTION IN THE EVENT OF FIRE

Fire in a cargo space containing this material: Open hatches to provide maximum ventilation. Ship's fixed fire-fighting installation will be inadequate. Use copious quantities of water. Flooding of the cargo space may be considered but due consideration should be given to stability.

Fire in an adjacent cargo space: Open hatches to provide maximum ventilation. Heat transferred from fire in an adjacent space can cause the material to decompose with consequent evolution of toxic fumes. Dividing bulkheads should be cooled.

MEDICAL FIRST AID

Refer to the Medical First Aid Guide (MFAG), as amended.

AMMONIUM NITRATE BASED FERTILIZER UN 2071

DESCRIPTION
Usually granules. Wholly or partly soluble in water. Hygroscopic.
Ammonium nitrate-based fertilizers classified as UN 2071 are uniform ammonium nitrate based fertilizer mixtures of the nitrogen, phosphate or potash, containing not more than 70% ammonium nitrate and not more than 0.4% total combustible organic material calculated as carbon or with not more than 45% ammonium nitrate and unrestricted combustible material. Fertilizers within these composition limits are not subject to the provisions of this schedule when shown by a trough Test (see UN Manual of Tests and Criteria, part III, subsection 38.2) that they are not liable to self-sustaining decomposition.

Notes:

1. All nitrate ions for which there is present in the mixture a molecular equivalent of ammonium ions should be calculated as ammonium nitrate.
2. The transport of ammonium nitrate materials which are liable to self-heating sufficient to initiate a decomposition is prohibited.
3. The NPK proportions for a fertilizer should not be used as a guide to its ability to undergo self-sustaining decomposition as this depends on the chemical species present (refer to UN Manual of Tests and Criteria, part III, subsection 38.2).

CHARACTERISTICS

ANGLE OF REPOSE	BULK DENSITY (kg/m^3)	STOWAGE FACTOR (m^3/t)
27° to 42°	900 to 1200	0.83 to 1.11
SIZE	**CLASS**	**GROUP**
1 to 5 mm	9	B

HAZARD
These mixtures may be subject to self-sustaining decomposition if heated. The temperature in such a reaction can reach 500°C. Decomposition, once initiated, may spread throughout the remainder, producing gases which are toxic. None of these mixtures is subject to the explosion hazard.
Fertilizer dust might be irritating to skin and mucous membranes.
This cargo is hygroscopic and will cake if wet.

STOWAGE AND SEGREGATION
"Separated by a complete compartment or hold from" combustible materials (particularly liquid), bromates, chlorates, chlorites, hypochlorites, nitrites, perchlorates, permanganates, powdered metals and vegetable fibres (e.g., cotton, jute, sisal, etc.).
"Separated from" all other goods.
"Separated from" sources of heat or ignition (see also Loading).
Not to be stowed immediately adjacent to any tank or double bottom containing fuel oil heated to more than 50°C.
If the bulkhead between the cargo space and the engine-room is not insulated to class A-60 standard, "away from" the bulkhead.

HOLD CLEANLINESS
Clean and dry as relevant to the hazards of the cargo.

WEATHER PRECAUTIONS
This cargo shall be kept as dry as practicable. This cargo shall not be handled during precipitation. During handling of this cargo all non-working hatches of the cargo spaces into which this cargo is loaded or to be loaded shall be closed.

LOADING
Trim in accordance with the relevant provisions required under sections 4 and 5 of the Code.

Prior to loading, the following provisions shall be complied with:

- All electrical equipment, other than those of approved intrinsically safe type, in the cargo spaces to be used for this cargo shall be electrically disconnected from the power source, by appropriate means other than fuse, at a point external to the space. This situation shall be maintained while the cargo is on board.
- Due consideration shall be paid to the possible need to open hatches in case of fire to provide maximum ventilation and to apply water in an emergency and the consequent risk to the stability of the ship through fluidization of the cargo.
- In addition, if decomposition occurs, the residue left after decomposition may have only half the mass of the original cargo. Due consideration shall be paid to the effect of the loss of mass on the stability of the ship.

During loading, the following provisions shall be complied with:

Bunkering of fuel oil shall not be allowed. Pumping of fuel oil in spaces adjacent to the cargo spaces for this cargo, other than the engine room, shall not be allowed.

PRECAUTIONS
This cargo shall only be accepted for loading when, as a result of testing in the trough test, its liability to self-sustaining decomposition shows decomposition rate not greater than 0.25 m/h. Pressure on the fire mains shall be maintained for fire-fighting and fire hoses shall be laid out or be in position and ready for immediate use during loading and discharging of this cargo. No welding, burning, cutting or other operations involving the use of fire, open flame, spark- or arc-producing equipment shall be carried out in the vicinity of the cargo spaces containing this cargo except in an emergency. Smoking shall not be allowed on deck and in the cargo spaces and "NO SMOKING" signs shall be displayed on deck whenever this cargo is on board. Precautions shall be taken to avoid the penetration of this cargo into other cargo spaces, bilges and other enclosed spaces. The hatches of the cargo spaces, whenever this material is on board, shall be kept free to be capable of being opened in case of an emergency.
Appropriate precautions shall be taken to protect machinery and accommodation spaces from the dust of the cargo. Bilge wells of the cargo spaces shall be protected from ingress of the cargo. Due consideration shall be paid to protect equipment from the dust of the cargo. Persons, who may be exposed to the dust of the cargo, shall wear goggles or other equivalent dust eye-protection and dust filter masks. Those persons shall wear protective clothing, as necessary.

VENTILATION
The cargo spaces carrying this cargo shall not be ventilated during voyage.

CARRIAGE
Hatches of the cargo spaces carrying this cargo shall be weathertight to prevent the ingress of water.
The temperature of this cargo shall be monitored and recorded daily during the voyage to detect decomposition resulting in spontaneous heating and oxygen depletion.

DISCHARGE
Bunkering or pumping of fuel oil shall not be allowed. If this cargo has hardened, it shall be trimmed to avoid the formation of overhangs, as necessary.

CLEAN UP
After discharge of this cargo, the bilge wells and the scuppers of the cargo spaces shall be checked and any blockage in the bilge wells and the scuppers shall be removed.

EMERGENCY PROCEDURES

SPECIAL EMERGENCY EQUIPMENT TO BE CARRIED Protective clothing (boots, gloves, coveralls, and headgear). Self-contained breathing apparatus.
EMERGENCY PROCEDURES Wear protective clothing and self-contained breathing apparatus. **EMERGENCY ACTION IN THE EVENT OF FIRE** Fire in a cargo space containing this material: Open hatches to provide maximum ventilation. Ship's fixed fire-fighting installation will be inadequate. Use copious quantities of water. Flooding of the cargo space may be considered but due consideration should be given to stability. Fire in an adjacent cargo space: Open hatches to provide maximum ventilation. Heat transferred from fire in an adjacent space can cause the material to decompose with consequent evolution of toxic fumes. Dividing bulkheads should be cooled. **MEDICAL FIRST AID** Refer to the Medical First Aid Guide (MFAG), as amended.

AMMONIUM NITRATE BASED FERTILIZER (non-hazardous)
(see AMMONIUM NITRATE-BASED FERTILIZER UN 2067 & UN 2071)

DESCRIPTION
Crystals, granules or prills non-cohesive when dry. Wholly or partly soluble in water.
Ammonium nitrate based fertilizers transported in conditions mentioned in this schedule are uniform mixtures containing ammonium nitrate as the main ingredient within the following composition limits:

.1 not more than 70% ammonium nitrate with other inorganic materials;

.2 not more than 80% ammonium nitrate mixed with calcium carbonate and/or dolomite and not more than 0.4% total combustible organic material calculated as carbon;

.3 nitrogen type ammonium nitrate based fertilizers containing mixtures of ammonium nitrate and ammonium sulphate with not more than 45% ammonium nitrate and not more than 0.4% total combustible organic material calculated as carbon; and

.4 uniform ammonium nitrate based fertilizer mixtures of the nitrogen, phosphate or potash, containing not more than 70% ammonium nitrate and not more than 0.4% total combustible organic material calculated as carbon or with not more than 45% ammonium nitrate and unrestricted combustible material. Fertilizers within these composition limits are not subject to the provisions of this schedule when shown by a trough Test (see UN Manual of Tests and Criteria, part III, subsection 38.2) that they are liable to self-sustaining decomposition or if they contain an excess of nitrate greater than 10% by mass.

Notes:

1. All nitrate ions for which there is present in the mixture a molecular equivalent of ammonium ions should be calculated as ammonium nitrate.
2. The transport of ammonium nitrate materials which are liable to self-heating sufficient to initiate decomposition is prohibited.
3. The NPK proportions for a fertilizer should not be used as a guide to its ability to undergo self-sustaining decomposition as this depends on the chemical species present (refer to UN Manual of Tests and Criteria, part III, subsection 38.2).
4. This schedule may only be used for substances that do not exhibit explosive properties of class 1 when tested in accordance to Test Series 1 and 2 of class 1 (see UN Manual of Tests and criteria, part I).
5. This schedule may only be used if the chemical or physical properties of an ammonium nitrate based fertilizer are such that when tested it does not meet the established defining criteria of any class.

CHARACTERISTICS

ANGLE OF REPOSE	BULK DENSITY (kg/m^3)	STOWAGE FACTOR (m^3/t)
27° to 42°	1000 to 1200	0.83 to 1.00
SIZE	**CLASS**	**GROUP**
1 to 4 mm	Not applicable	C

HAZARD
This cargo is non-combustible or with a low fire-risk.
Even though this cargo is classified as non-hazardous, it will behave in the same way as the ammonium nitrate based fertilizers classified in class 9 under UN 2071 when heated strongly, by decomposing and giving off toxic gases.
The speed of the decomposition reaction is lower, but there will be a risk of toxic fumes in the cargo space and on deck if the cargo is strongly heated.
Fertilizer dust might be irritating to skin and mucous membranes.
This cargo is hygroscopic and will cake if wet.

STOWAGE AND SEGREGATION
The compatibility of non-hazardous ammonium nitrate based fertilizers with other materials which may be stowed in the same cargo space should be considered before loading.
"Separated from" sources of heat or ignition (see also LOADING).
Not to be stowed immediately adjacent to any tank or double bottom containing fuel oil heated to more than 50°C.
Fertilizers of this type should be stowed out of direct contact with a metal engine-room boundary. This may be done, for example, by using flame-retardant bags containing inert materials or by any equivalent barrier approved by the competent authority. This requirement need not apply to short international voyages.

HOLD CLEANLINESS
Clean and dry as relevant to the hazards of the cargo.

WEATHER PRECAUTIONS
This cargo shall be kept as dry as practicable. This cargo shall not be handled during precipitation. During handling of this cargo all non-working hatches of the cargo spaces into which this cargo is loaded or to be loaded shall be closed.

LOADING
Trim in accordance with the relevant provisions required under sections 4 and 5 of the Code.

Prior to loading, the following provisions shall be complied with:

- All electrical equipment, other than those of approved intrinsically safe type, in the cargo spaces to be used for this cargo shall be electrically disconnected from the power source, by appropriate means other than a fuse, at a point external to the space. This situation shall be maintained while the cargo is on board.
- Due consideration shall be paid to the possible need to open hatches in case of fire to provide maximum ventilation and to apply water in an emergency and the consequent risk to the stability of the ship through fluidization of the cargo.
- In addition, if decomposition occurs, the residue left after decomposition may have only half the mass of the original cargo. Due consideration shall be paid to the effect of the loss of mass on the stability of the ship.

During loading, the following provisions shall be complied with:

Bunkering of fuel oil shall not be allowed. Pumping of fuel oil in spaces adjacent to the cargo spaces for this cargo, other than the engine room, shall not be allowed.

PRECAUTIONS

No welding, burning, cutting or other operations involving the use of fire, open flame, spark or arc-producing equipment shall be carried out in the vicinity of the cargo spaces containing this cargo except in an emergency. Smoking shall not be allowed on deck and in the cargo spaces and "NO SMOKING" signs shall be displayed on deck whenever this cargo is on board. The hatches of the cargo spaces, whenever this material is on board, shall be kept free to be capable of being opened in case of an emergency.

Appropriate precautions shall be taken to protect machinery and accommodation spaces from the dust of the cargo. Bilge wells of the cargo spaces shall be protected from ingress of the cargo. Due consideration shall be paid to protect equipment from the dust of the cargo. Persons, who may be exposed to the dust of the cargo, shall wear goggles or other equivalent dust eye-protection and dust filter masks. Those persons shall wear protective clothing, as necessary.

VENTILATION

The cargo spaces carrying this cargo shall not be ventilated during voyage.

CARRIAGE

Hatches of the cargo spaces carrying this cargo shall be weathertight to prevent the ingress of water.

The temperature of this cargo shall be monitored and recorded daily during the voyage to detect decomposition resulting in spontaneous heating and oxygen depletion.

DISCHARGE

Bunkering or pumping of fuel oil shall not be allowed. If this cargo has hardened, it shall be trimmed to avoid the formation of overhangs, as necessary.

CLEAN UP

After discharge of this cargo, the bilge wells and the scuppers of the cargo spaces shall be checked and any blockage in the bilge wells and the scuppers shall be removed.

EMERGENCY PROCEDURES

SPECIAL EMERGENCY EQUIPMENT TO BE CARRIED

Protective clothing (boots, gloves, coveralls, and headgear).
Self-contained breathing apparatus.

EMERGENCY PROCEDURES

Wear protective clothing and self-contained breathing apparatus.

EMERGENCY ACTION IN THE EVENT OF FIRE

Fire in a cargo space containing this material: Open hatches to provide maximum ventilation. Ship's fixed fire-fighting installation will be inadequate. Use copious quantities of water. Flooding of the cargo space may be considered but due consideration should be given to stability.

Fire in an adjacent cargo space: Open hatches to provide maximum ventilation. Heat transferred from fire in an adjacent space can cause the material to decompose with consequent evolution of toxic fumes. Dividing bulkheads should be cooled.

MEDICAL FIRST AID

Refer to the Medical First Aid Guide (MFAG), as amended.

AMMONIUM SULPHATE

DESCRIPTION
Brownish grey to white crystals. Soluble in water. Free flowing. Absorbs moisture. Moisture content 0.04% to 0.5%. Ammonia odour. Subject to natural loss in weight.

CHARACTERISTICS

ANGLE OF REPOSE	BULK DENSITY (kg/m^3)	STOWAGE FACTOR (m^3/t)
28° to 35°	943 to 1052	0.95 to 1.06
SIZE	**CLASS**	**GROUP**
2 mm to 4 mm	Not applicable	C

HAZARD
Dust may cause skin and eye irritation. Harmful if swallowed. Even though this cargo is classified as non-hazardous, it may cause heavy corrosion of framing, side shell, bulkhead etc. if sweating of cargo space occurs.
This cargo is non-combustible or has a low fire-risk.

STOWAGE & SEGREGATION
No special requirements.

HOLD CLEANLINESS
Clean and dry as relevant to the hazards of the cargo.

WEATHER PRECAUTIONS
This cargo shall be kept as dry as practicable. This cargo shall not be handled during precipitation. During handling of this cargo all non-working hatches of the cargo spaces into which this cargo is loaded or to be loaded shall be closed.

LOADING
Avoid generating dust when loading. During loading, due consideration shall be paid to minimize dust generation. Trim in accordance with the relevant provisions required under sections 4 and 5 of the Code.

PRECAUTIONS
Appropriate precautions shall be taken to protect machinery and accommodation spaces from the dust of the cargo. Bilge wells of the cargo spaces shall be protected from ingress of the cargo. Due consideration shall be paid to protect equipment from the dust of the cargo. Persons, who may be exposed to the dust of the cargo, shall wear goggles or other equivalent dust eye-protection and dust filter masks. Those persons shall wear protective clothing, as necessary.

VENTILATION
The cargo spaces carrying this cargo shall not be ventilated during voyage.

CARRIAGE
No special requirements.

DISCHARGE
If this cargo has hardened, it shall be trimmed to avoid the formation of overhangs, as necessary.

CLEAN UP
After discharge of this cargo, the cargo spaces shall be thoroughly cleaned and washed out to remove all traces of the cargo, and dried, except in the case that the cargo to be loaded has the same BCSN of the cargo to be loaded subsequent to discharge is AMMONIUM SULPHATE.

ANTIMONY ORE AND RESIDUE

DESCRIPTION
Lead grey mineral, subject to black tarnish.

CHARACTERISTICS

ANGLE OF REPOSE	BULK DENSITY (kg/m^3)	STOWAGE FACTOR (m^3/t)
Not applicable	2381 to 2941	0.34 to 0.42
SIZE	**CLASS**	**GROUP**
Not applicable	Not applicable	C

HAZARD
This cargo is non-combustible or has a low fire-risk.
If involved in a fire, dangerous fumes of antimony and sulphur oxides can evolve.

STOWAGE & SEGREGATION
No special requirements.

HOLD CLEANLINESS
No special requirements.

WEATHER PRECAUTIONS
No special requirements.

LOADING
Trim in accordance with the relevant provisions required under sections 4 and 5 of the Code.

As the density of the cargo is extremely high, the tanktop may be overstressed unless the cargo is evenly spread across the tanktop to equalize the weight distribution. Due consideration shall be paid to ensure that tanktop is not overstressed during voyage and during loading by a pile of the cargo.

PRECAUTIONS
Appropriate precautions shall be taken to protect machinery and accommodation spaces from the dust of the cargo. Bilge wells of the cargo spaces shall be protected from ingress of the cargo. Due consideration shall be paid to protect equipment from the dust of the cargo. Persons, who may be exposed to the dust of the cargo, shall wear protective clothing, goggles or other equivalent dust eye-protection and dust filter masks, as necessary.

VENTILATION
No special requirements.

CARRIAGE
No special requirements.

DISCHARGE
No special requirements.

CLEAN UP
No special requirements.

BARIUM NITRATE UN 1446

DESCRIPTION
Glossy white crystals or powder. Soluble in water.

CHARACTERISTICS

ANGLE OF REPOSE	BULK DENSITY (kg/m^3)		STOWAGE FACTOR (m^3/t)
Not applicable	-		-
SIZE	**CLASS**	**SUBSIDIARY RISK**	**GROUP**
Fine Powder	**5.1**	6.1	B

HAZARD
Toxic if swallowed or by dust inhalation. If involved in a fire mixture with combustible materials are readily ignited and may burn fiercely.

STOWAGE & SEGREGATION
"Separated from" foodstuffs.

HOLD CLEANLINESS
Clean and dry as relevant to the hazards of the cargo.

WEATHER PRECAUTIONS
No special requirements**.**

LOADING
Trim in accordance with the relevant provisions required under sections 4 and 5 of the Code.

PRECAUTIONS
Appropriate precautions shall be taken to protect machinery and accommodation spaces from the dust of the cargo. Bilge wells of the cargo spaces shall be protected from ingress of the cargo. Due consideration shall be paid to protect equipment from the dust of the cargo. Persons, who may be exposed to the dust of the cargo, shall wear goggles or other equivalent dust eye-protection and dust filter masks. Those persons shall wear protective clothing, as necessary. Bilge wells shall be clean, dry and covered as appropriate, to prevent ingress of the cargo.

VENTILATION
Surface ventilation only, either natural or mechanical, shall be conducted, as necessary, during the voyage for this cargo.

CARRIAGE
No special requirements.

DISCHARGE
No special requirements.

CLEAN UP
No special requirements.

EMERGENCY PROCEDURES

SPECIAL EMERGENCY EQUIPMENT TO BE CARRIED Protective clothing (gloves, boots, overalls, headgear). Self-contained breathing apparatus. Spray nozzles.
EMERGENCY PROCEDURES Wear protective clothing and self-contained breathing apparatus. **EMERGENCY ACTION IN THE EVENT OF FIRE** Use copious amounts of water, which is best applied in the form of a spray to avoid disturbing the surface of the material. The material may fuse or melt, in which condition application of water may result in excessive scattering of molten materials. Exclusion of air or the use of CO_2 will not control the fire. Due consideration should be given to the stability of the ship due to the effect of accumulated water. **MEDICAL FIRST AID** Refer to the Medical First Aid Guide (MFAG), as amended.

BARYTES

DESCRIPTION
Crystalline ore mineral. A sulphate of Barium. Moisture 1% to 6%.

CHARACTERISTICS

ANGLE OF REPOSE	BULK DENSITY (kg/m^3)	STOWAGE FACTOR (m^3/t)
Not applicable	2941	0.34
SIZE	**CLASS**	**GROUP**
80% lumps: 6.4 to 101.6 mm 20% fines: less than 6.4 mm	Not applicable	C

HAZARD
No special hazards.
This cargo is non-combustible or has a low fire-risk.

STOWAGE & SEGREGATION
No special requirements.

HOLD CLEANLINESS
No special requirements.

WEATHER PRECAUTIONS
No special requirements.

LOADING
Trim in accordance with the relevant provisions required under sections 4 and 5 of the Code.

As the density of the cargo is extremely high, the tanktop may be overstressed unless the cargo is evenly spread across the tanktop to equalize the weight distribution. Due consideration shall be paid to ensure that tanktop is not overstressed during voyage and during loading by a pile of the cargo.

PRECAUTIONS
Appropriate precautions shall be taken to protect machinery and accommodation spaces from the dust of the cargo. Bilge wells of the cargo spaces shall be protected from ingress of the cargo. Due consideration shall be paid to protect equipment from the dust of the cargo. Persons, who may be exposed to the dust of the cargo, shall wear protective clothing, goggles or other equivalent dust eye-protection and dust filter masks, as necessary.

VENTILATION
No special requirements.

CARRIAGE
No special requirements.

DISCHARGE
No special requirements.

CLEAN UP
No special requirements.

BAUXITE

DESCRIPTION
A brownish, yellow claylike and earthy mineral. Moisture content: 0% to 10%. Insoluble in water.

CHARACTERISTICS

ANGLE OF REPOSE	BULK DENSITY (kg/m^3)	STOWAGE FACTOR (m^3/t)
Not applicable	1190 to 1389	0.72 to 0.84
SIZE	**CLASS**	**GROUP**
70% to 90% lumps: 2.5 mm to 500 mm 10% to 30% powder	Not applicable	C

HAZARD
No special hazards.
This cargo is non-combustible or has a low fire-risk.

STOWAGE & SEGREGATION
No special requirements.

HOLD CLEANLINESS
No special requirements.

WEATHER PRECAUTIONS
No special requirements.

LOADING
Trim in accordance with the relevant provisions required under sections 4 and 5 of the Code.

PRECAUTIONS
Bilge wells shall be clean, dry and covered as appropriate, to prevent ingress of the cargo.

VENTILATION
No special requirements.

CARRIAGE
No special requirements.

DISCHARGE
No special requirements.

CLEAN UP
No special requirements.

BIOSLUDGE

DESCRIPTION
Heat-dried activated sludge. Very fine granular product. Moisture: 3% to 5%. Black speckled colour.

CHARACTERISTICS

ANGLE OF REPOSE	BULK DENSITY (kg/m^3)	STOWAGE FACTOR (m^3/t)
Not applicable	654	1.53
SIZE	**CLASS**	**GROUP**
Not applicable	Not applicable	C

HAZARD
No special hazards.
This cargo is non-combustible or has a low fire-risk.

STOWAGE & SEGREGATION
No special requirements.

HOLD CLEANLINESS
No special requirements.

WEATHER PRECAUTIONS
No special requirements.

LOADING
Trim in accordance with the relevant provisions required under sections 4 and 5 of the Code.

PRECAUTIONS
Appropriate precautions shall be taken to protect machinery and accommodation spaces from the dust of the cargo. Bilge wells of the cargo spaces shall be protected from ingress of the cargo. Due consideration shall be paid to protect equipment from the dust of the cargo. Persons, who may be exposed to the dust of the cargo, shall wear protective clothing, goggles or other equivalent dust eye-protection and dust filter masks, as necessary.

VENTILATION
No special requirements.

CARRIAGE
No special requirements.

DISCHARGE
No special requirements.

CLEAN UP
No special requirements.

BORAX (PENTAHYDRATE CRUDE)

DESCRIPTION
A chemical compound of Boracic Acid and soda. Free flowing powder or granules. Grey colour. Dusty.

CHARACTERISTICS

ANGLE OF REPOSE	BULK DENSITY (kg/m^3)	STOWAGE FACTOR (m^3/t)
Not applicable	1087	0.92
SIZE	**CLASS**	**GROUP**
Up to 2.36 mm	Not applicable	C

HAZARD
No special hazards.
This cargo is non-combustible or has a low fire-risk.
This cargo is hygroscopic and will cake if wet.

STOWAGE & SEGREGATION
No special requirements.

HOLD CLEANLINESS
No special requirements.

WEATHER PRECAUTIONS
This cargo shall be kept as dry as practicable. This cargo shall not be handled during precipitation. During handling of this cargo all non-working hatches of the cargo spaces into which this cargo is loaded or to be loaded shall be closed.

LOADING
Trim in accordance with the relevant provisions required under sections 4 and 5 of the Code.

PRECAUTIONS
Appropriate precautions shall be taken to protect machinery and accommodation spaces from the dust of the cargo. Bilge wells of the cargo spaces shall be protected from ingress of the cargo. Due consideration shall be paid to protect equipment from the dust of the cargo. Persons, who may be exposed to the dust of the cargo, shall wear protective clothing, goggles or other equivalent dust eye-protection and dust filter masks, as necessary.

VENTILATION
No special requirements.

CARRIAGE
No special requirements.

DISCHARGE
If this cargo has hardened, it shall be trimmed to avoid the formation of overhangs, as necessary.

CLEAN UP
No special requirements.

BORAX, ANHYDROUS
(crude or refined)

DESCRIPTION
Crude is normally of yellow white appearance. When highly refined becomes white crystalline. Dusty and hygroscopic.

CHARACTERISTICS

ANGLE OF REPOSE	BULK DENSITY (kg/m^3)	STOWAGE FACTOR (m^3/t)
35	1282	0.78
SIZE	**CLASS**	**GROUP**
Granules less than 1.4 mm	Not applicable	C

HAZARD
Dust very abrasive and irritating, but not toxic, if inhaled.
This cargo is non-combustible or has a low fire-risk.
This cargo is hygroscopic and will cake if wet.

STOWAGE & SEGREGATION
No special requirements.

HOLD CLEANLINESS
No special requirements.

WEATHER PRECAUTIONS
No special requirements.

LOADING
Trim in accordance with the relevant provisions required under sections 4 and 5 of the Code.

PRECAUTIONS
Appropriate precautions shall be taken to protect machinery and accommodation spaces from the dust of the cargo. Bilge wells of the cargo spaces shall be protected from ingress of the cargo. Due consideration shall be paid to protect equipment from the dust of the cargo. Persons, who may be exposed to the dust of the cargo, shall wear goggles or other equivalent dust eye-protection and dust filter masks. Those persons shall wear protective clothing, as necessary.

VENTILATION
No special requirements.

CARRIAGE
No special requirements.

DISCHARGE
If this cargo has hardened, it shall be trimmed to avoid the formation of overhangs, as necessary.

CLEAN UP
No special requirements.

BROWN COAL BRIQUETTES

DESCRIPTION
Brown Coal (Lignite) Briquettes are manufactured by pressing dried brown coal particles into compressed blocks.

CHARACTERISTICS

ANGLE OF REPOSE	BULK DENSITY (kg/m^3)	STOWAGE FACTOR (m^3/t)
Not applicable	750	1.34
SIZE	**CLASS**	**GROUP**
Mainly up to 50 mm	MHB	B

HAZARD
Briquettes are easily ignited, liable to spontaneous combustion and will deplete oxygen in cargo space.

STOWAGE & SEGREGATION
Refer to the appendix to this schedule.

HOLD CLEANLINESS
Clean and dry as relevant to the hazards of the cargo. Previous cargo battens shall be removed from the cargo spaces.

WEATHER PRECAUTIONS
No special requirements.

LOADING
Refer to the appendix to this schedule.

PRECAUTIONS
Appropriate precautions shall be taken to protect machinery and accommodation spaces from the dust of the cargo. Bilge wells of the cargo spaces shall be protected from ingress of the cargo. Due consideration shall be paid to protect equipment from the dust of the cargo. Persons, who may be exposed to the dust of the cargo, shall wear protective clothing, goggles or other equivalent dust eye-protection and dust filter masks, as necessary.

VENTILATION
The cargo spaces carrying this cargo shall not be ventilated during voyage. Refer to the appendix to this schedule.

CARRIAGE
Refer to the appendix to this schedule.

DISCHARGE
Refer to the appendix to this schedule.

CLEAN UP
After discharge of this cargo, the bilge wells and the scuppers of the cargo spaces shall be checked and any blockage in the bilge wells and the scuppers shall be removed

EMERGENCY PROCEDURES

SPECIAL EMERGENCY EQUIPMENT TO BE CARRIED Nil
EMERGENCY PROCEDURES Nil **EMERGENCY ACTION IN THE EVENT OF FIRE** Batten down. Exclusion of air may be sufficient to control fire. **Do not use water.** Seek expert advice and consider heading for the nearest suitable port. **MEDICAL FIRST AID** Refer to the Medical First Aid Guide (MFAG), as amended.

REMARK
The use of CO_2 or inert gas, if available, should be withheld until fire is apparent.

APPENDIX

BROWN COAL BRIQUETTES

HAZARD

1. This cargo is easily ignited, liable to heat spontaneously and deplete oxygen in the cargo space.
2. This cargo is subject to oxidation, leading to depletion of oxygen and an increase in carbon dioxide in the cargo space (see also section 3).
3. This cargo is liable to heat spontaneously and may ignite spontaneously in the cargo space. When spontaneous heating occurs, flammable and toxic gases, including carbon monoxide, may be produced. Carbon monoxide is an odourless gas, slightly lighter than air, and has flammable limits in air of 12% to 75% by volume. It is toxic by inhalation, with an affinity for blood haemoglobin over 200 times that of oxygen. The recommended Threshold Limit Value (TLV) for carbon monoxide exposure is 50 ppm.

STOWAGE & SEGREGATION

1. Boundaries of cargo spaces where these cargoes are carried *shall* be resistant to fire and liquids.
2. This cargo *shall* be "separated from" goods of classes 1 (Division 1.4), 2, 3, 4 and 5 in packaged form (see IMDG Code) and "separated from" solid bulk material of classes 4 and 5.1.
3. Stowage of goods of class 5.1 in packaged form or solid bulk materials of class 5.1 above or below this cargo *shall* be prohibited.
4. This cargo *shall* be "separated longitudinally by an intervening complete compartment or hold from" goods of class 1 other than Division 1.4.
5 This cargo *shall* not be stowed adjacent to sources of heat.

Note: For interpretation of these terms, see section 9.

LOADING

1. Prior to loading, the shipper, or their appointed agent, *shall* provide in writing to the master, the characteristics of the cargo and the recommended safe handling procedures for loading and transport of the cargo. As a minimum, the cargo's contract specifications for moisture content, sulphur content and size *shall* be stated.
2. This cargo *shall* be stored for 7 days prior to loading. This substantially reduces the risk of spontaneous combustion in subsequent transport, storage and handling.
3. Before loading this cargo, the master *shall* ensure the following:
   - 3.1 weather deck enclosures to the cargo space have been inspected to ensure their integrity. Such closures are closed and sealed;
   - 3.2 all electrical cables and components situated in cargo spaces and adjacent spaces are free from defects. Such cables and electrical components are safe to be used in a flammable and/or dusty atmosphere or positively isolated;
4. Smoking and the use of naked flames shall not be permitted in the cargo areas and adjacent spaces and appropriate warning notices shall be posted in conspicuous places. Burning, cutting, chipping, welding or other sources of ignition shall not be permitted in the vicinity of cargo spaces or in other adjacent spaces.
5. This cargo *shall* not be dropped more than one metre during loading to minimize the production of dust and fines.

6. Individual cargo spaces *shall* be loaded without interruption, where possible. Hot spots may develop in a cargo space that has been kept open for more than six days (or less in weather over 30°C).
7. Prior to departure, the master shall be satisfied that the surface of the material has been trimmed reasonably level to the boundaries of the cargo space to avoid the formation of gas pockets and to prevent air from permeating the body of the briquettes. Casing leading into the cargo space *shall* be adequately sealed. The shipper *shall* ensure that the master receives the necessary cooperation from the loading terminal.
8. Individual cargo spaces *shall* be closed and sealed as soon as practicable after the cargo has been loaded into each cargo space.

PRECAUTIONS

1. The ship shall be suitably fitted and carry on board appropriate instruments for measuring the following without requiring entry into the cargo space:
2. It is recommended that means be provided for monitoring the temperature of the cargo in the range of 0°C to 100°C to enable the measurement of temperature of the cargo during the voyage without requiring entry into the cargo space.

CARRIAGE

1. As far as practicable, any gases which may be emitted from the cargo shall not be allowed to accumulate in adjacent enclosed spaces, such as store-rooms, carpenter's shop, passage ways, tunnels, etc. Such spaces *shall* be adequately ventilated and regularly monitored for methane, oxygen and carbon monoxide.
2. Under no circumstances, except in emergency, *shall* the hatches be opened or the cargo space be ventilated or entered during the voyage.
3. The atmosphere in the space above the cargo in each cargo space *shall* be regularly monitored for the concentrations of methane, oxygen and carbon monoxide.
4. The frequency of the monitoring *shall* be determined based upon the information provided by the shipper and the information obtained through the analysis of the atmosphere in the cargo space. The monitoring *shall* be conducted at least daily and as close as practical to the same time of day. The results of monitoring shall be recorded. The shipper may request more frequent monitoring, particularly if there is evidence of significant self-heating during the voyage.
5. The following issues shall be taken into account:
   - 5.1 The oxygen level in the sealed cargo space will fall from an initial 21% over a period of days to stabilize at levels of the order of 6 to 15%. If the oxygen level does not fall below 20%, or rapidly increases after an initial fall, it is possible that the cargo space is inadequately sealed and is at risk of spontaneous combustion.
   - 5.2 Carbon monoxide levels will build up to concentrations which fluctuate in the 200 to 2000 parts per million (ppm) range in a safe, well sealed cargo space. A rapid increase of approximately 1000 ppm in carbon monoxide levels in this cargo over a 24-hour period is a possible indicator of spontaneous combustion, particularly if accompanied by an increase in methane levels.
   - 5.3 The methane composition in briquette cargo is normally low, less than 5 ppm and does not constitute a hazard. However, a sudden and continuing rise in methane levels, to concentrations above 10 ppm, is an indicator of the occurrence of spontaneous combustion in the hold.

5.4 The temperature in this cargo in a well sealed cargo space normally remains at 5 to 10°C above sea water temperature, the increase being due to normal diurnal breathing of small quantities of air into the cargo space. Checking of the cargo space seals to minimize air leakage is essential. A rapid increase in temperature of approximately 20°C over 24 hours is evidence of spontaneous combustion.

6. Regular hold bilge testing *shall* be systematically carried out. If the pH monitoring indicates that a corrosion risk exists, the master *shall* ensure that all bilges are kept dry during the voyage in order to avoid possible accumulation of acids on tank tops and in the bilge system.

7. When the behaviour of the cargo during the voyage differs from that specified in the cargo information, the master *shall* report such differences to the shipper. Such reports will enable the shipper to maintain records on the behaviour of this cargo, so that the information being provided to the master can be reviewed in the light of the transport experience.

8. When the master is concerned that the cargo is showing any signs of self-heating or spontaneous combustion, such as an increase in the concentration of methane or carbon monoxide or an increase in temperature, as described above, the following actions *shall* be taken:

8.1 Consult with the ship's agent at the loading port. The Company's designated person ashore shall be advised immediately.

8.2 Check the seal of the cargo space and re-seal the cargo space, as necessary.

8.3 Do not enter the cargo space and do not open the hatches, unless the master considers access is necessary for the safety of the ship or safety of life. When any ship's personnel has entered into a cargo space, re-seal the cargo space immediately after the personnel vacate the cargo space.

8.4 Increase the frequency of monitoring the gas composition, and temperature when practicable, of the cargo.

8.5. Send the following information, as soon as possible, to the ship's owner or agent at the loading port to obtain expert advice:

.1 the number of cargo spaces involved;

.2 monitoring results of the carbon monoxide, methane and oxygen concentrations;

.3 if available, temperature of the cargo, location and method used to obtain results;

.4 the time the gas analyses were taken (monitoring routine);

.5 the quantity of the cargo in the cargo space(s) involved;

.6 the description of the cargo as per the shipper's declaration, and any special precautions indicated on the declaration;

.7 the date of loading, and Estimated Time of Arrival (ETA) at the intended discharge port (which *shall* be specified); and

.8 any other comments or observations the master may consider relevant.

DISCHARGE

Prior to, and during discharge:

1. The cargo space shall be kept closed until just before the commencement of discharge of that space. The cargo may be sprayed with a fine water spray to reduce dust.
2. Personnel shall not enter the cargo space without having tested the atmosphere above the cargo. The personnel entering into a cargo space in which the atmosphere contains oxygen levels below 21% shall wear self-contained breathing apparatus. Carbon dioxide and carbon monoxide gas levels *shall* also be tested prior to entry into the cargo spaces. The recommended Threshold Limit Value (TLV) for carbon monoxide is 50 ppm.
3. During discharge, attention *shall* be paid to the cargo for signs of hot spots (i.e., steaming). If a hot spot is detected, the area shall be sprayed with fine water spray and the hot spot shall be removed immediately to prevent spreading. The hot spot cargo shall be spread out on the wharf away from the remainder of the cargo.
4. Prior to suspending the discharge of this cargo for more than eight hours, the hatch covers and all other ventilation for the cargo space *shall* be closed.

PROCEDURES FOR GAS MONITORING OF BROWN COAL BRIQUETTE CARGOES

1 Observations

1.1 Carbon monoxide monitoring, when conducted in accordance with the following procedures, will provide a reliable early indication of self-heating within this cargo. This allows preventive action to be considered without delay. A sudden rapid rise in carbon monoxide detected within a cargo space, particularly if accompanied by an increase in methane levels, is a conclusive indication that self-heating is taking place.

1.2 All vessels engaged in the carriage of this cargo *shall* carry on board an instrument for measuring methane, oxygen and carbon monoxide gas concentrations, to enable the monitoring of the atmosphere within the cargo space. This instrument *shall* be regularly serviced and calibrated in accordance with the manufacturer's instructions. Care shall be exercised in interpreting methane measurements carried out in the low oxygen concentrations often found in unventilated cargo holds. The catalytic sensors normally used for the detection of methane rely on the presence of sufficient oxygen for accurate measurement. This phenomenon does not affect the measurement of carbon monoxide, or measurement of methane by infrared sensor. Further guidance may be obtained from the instrument manufacturer.

2 Sampling and measurement procedure

2.1 Equipment

2.1.1 An instrument which is capable of measuring methane, oxygen and carbon monoxide concentrations shall be provided on board a ship carrying this cargo. The instrument *shall* be fitted with an aspirator, flexible connection and a length of spark-proof metal tubing to enable a representative sample to be obtained from within the square of the hatch.

2.1.2 When recommended by the manufacturer, a suitable filter *shall* be used to protect the instrument against the ingress of moisture. The presence of even a small amount of water will compromise the accuracy of the measurement.

2.2 Siting of sampling points

2.2.1 In order to obtain meaningful information about the behaviour of this cargo in a cargo space, gas measurements *shall* be made via one sample point per cargo space. To ensure flexibility of measurement in adverse weather, however, two sample points *shall* be provided per cargo space, one on the port side and one on the starboard side of the hatch cover or hatch coaming (refer to diagram of gas sampling point). Measurement from either of these locations is satisfactory.

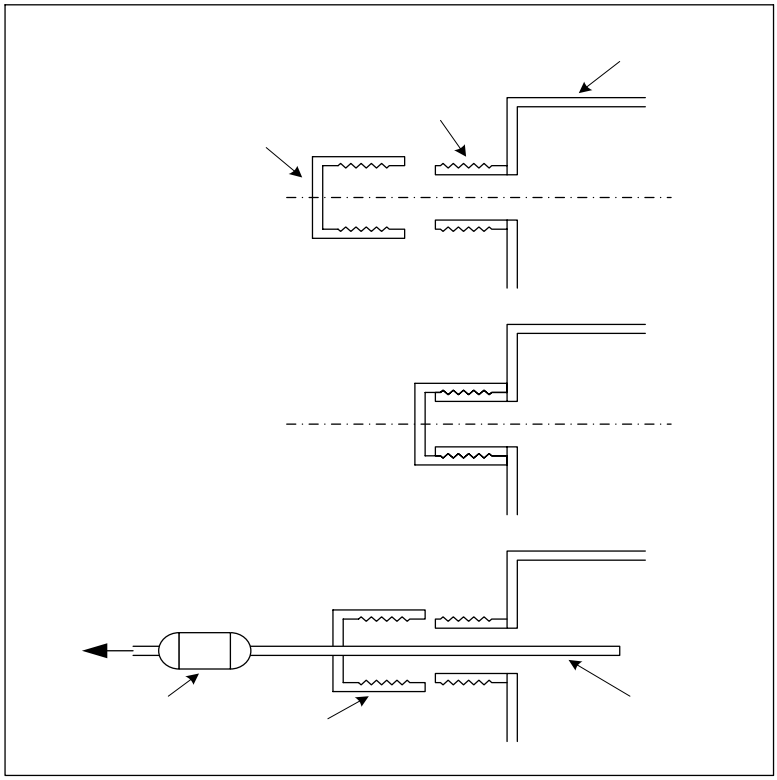

Diagram of gas sampling point

2.2.2 Each sample point *shall* comprise a hole of diameter approximately 12 mm positioned as near to the top of the hatch coaming as possible. It *shall* be sealed with a sealing cap to prevent ingress of water and air. It is essential this cap be securely replaced after each measurement to maintain a tight seal.

2.2.3 The provision of any sample point *shall* not compromise the seaworthiness of the vessel.

2.3 Measurement

The explanation on procedures for measurement is as follows:

.1 remove the sealing cap, insert the rigid tube into the sampling point and tighten the integral cap to ensure an adequate seal;

.2 connect the instrument to the sampling tube;

.3 draw a sample of the atmosphere through the tube, using the aspirator, until steady readings are obtained;

.4 log the results on a form which records cargo hold, date and time for each measurement; and

.5 put back the sealing cap.

CALCIUM NITRATE UN 1454

DESCRIPTION
White deliquescent solid soluble in water. The provisions of this Code should not apply to the commercial grades of calcium nitrate fertilizers consisting mainly of a double salt (calcium nitrate and ammonium nitrate) and containing not more than 10% ammonium nitrate and at least 12% water of crystallization.

CHARACTERISTICS

ANGLE OF REPOSE	BULK DENSITY (kg/m^3)	STOWAGE FACTOR (m^3/t)
Not applicable	893 to 1099	0.91 to 1.12
SIZE	**CLASS**	**GROUP**
Not applicable	5.1	B

HAZARD
Non-combustible materials. If involved in a fire, will greatly intensify the burning of combustible materials. Although non-combustible, mixtures with combustible material are easily ignited and may burn fiercely.
This cargo is hygroscopic and will cake if wet.
This cargo is harmful if swallowed.

STOWAGE & SEGREGATION
"Separated from" foodstuffs.

HOLD CLEANLINESS
Clean and dry as relevant to the hazards of the cargo.

WEATHER PRECAUTIONS
This cargo shall be kept as dry as practicable. This cargo shall not be handled during precipitation. During handling of this cargo all non-working hatches of the cargo spaces into which this cargo is loaded or to be loaded shall be closed.

LOADING
Appropriate measures shall be taken to prevent the cargo from contact with combustible materials.
Trim in accordance with the relevant provisions required under sections 4 and 5 of the Code.

PRECAUTIONS
Bilge wells shall be clean, dry and covered as appropriate, to prevent ingress of the cargo.

VENTILATION
The cargo spaces carrying this cargo shall not be ventilated during voyage.

CARRIAGE
No special requirements.

DISCHARGE
If this cargo has hardened, it shall be trimmed to avoid the formation of overhangs, as necessary.

CLEAN UP
No special requirements.

EMERGENCY PROCEDURES

SPECIAL EMERGENCY EQUIPMENT TO BE CARRIED

Protective clothing (gloves, boots, coveralls, headgear). Self-contained breathing apparatus. Spray nozzles.

EMERGENCY PROCEDURES

Wear protective clothing and self-contained breathing apparatus.

EMERGENCY ACTION IN THE EVENT OF FIRE

Use copious quantities of water, which is best applied in the form of a spray to avoid disturbing the surface of the material. The material may fuse or melt, in which condition application of water may result in extensive scattering of the molten materials. Exclusion of air or the use of CO_2 will not control the fire. Due consideration should be given to the stability of the ship due to the effect of accumulated water.

MEDICAL FIRST AID

Refer to the Medical First Aid Guide (MFAG), as amended.

CALCIUM NITRATE FERTILIZER

DESCRIPTION
Granules mainly of a double salt (calcium nitrate and ammonium nitrate) and containing not more than 15.5% total nitrogen and at least 12% water. Refer to the schedule for Calcium Nitrate UN No:1454 where the total nitrogen content exceeds 15.5%, or where the water content is less than 12%.

CHARACTERISTICS

ANGLE OF REPOSE	BULK DENSITY (kg/m^3)	STOWAGE FACTOR (m^3/t)
34°	1053 to 1111	0.90 to 0.95
SIZE	**CLASS**	**GROUP**
1 mm to 4 mm	Not applicable	C

HAZARD
No special hazards.
This cargo is non-combustible or has a low fire-risk.

STOWAGE & SEGREGATION
"Separated from" foodstuffs.

HOLD CLEANLINESS
Clean and dry as relevant to the hazards of the cargo.

WEATHER PRECAUTIONS
This cargo shall be kept as dry as practicable. This cargo shall not be handled during precipitation. During handling of this cargo all non-working hatches of the cargo spaces into which this cargo is loaded or to be loaded shall be closed.

LOADING
Trim in accordance with the relevant provisions required under sections 4 and 5 of the Code.

PRECAUTIONS
No special requirements.

VENTILATION
The cargo spaces carrying this cargo shall not be ventilated during voyage.

CARRIAGE
No special requirements.

DISCHARGE
No special requirements.

CLEAN UP
No special requirements.

CARBORUNDUM

DESCRIPTION
A hard black crystalline compound of carbon and silicon. Odourless. No moisture content.

CHARACTERISTICS

ANGLE OF REPOSE	BULK DENSITY (kg/m^3)	STOWAGE FACTOR (m^3/t)
Not applicable	1786	0.56
SIZE	**CLASS**	**GROUP**
75% lumps: under 203.2 mm 25% lumps: under 12.7 mm	Not applicable	C

HAZARD
Slightly toxic by inhalation.
This cargo is non-combustible or has a low fire-risk.

STOWAGE & SEGREGATION
No special requirements.

HOLD CLEANLINESS
No special requirements.

WEATHER PRECAUTIONS
No special requirements.

LOADING
Trim in accordance with the relevant provisions required under sections 4 and 5 of the Code.

PRECAUTIONS
Protect machinery, accommodation and equipment from dust. Personnel involved in cargo handling should wear protective clothing and dust filter masks.

VENTILATION
No special requirements.

CARRIAGE
No special requirements.

DISCHARGE
No special requirements.

CLEAN UP
No special requirements.

CASTOR BEANS or
CASTOR MEAL or
CASTOR POMACE or
CASTOR FLAKE UN 2969

DESCRIPTION
The beans from which castor oil is obtained.

CHARACTERISTICS

ANGLE OF REPOSE	BULK DENSITY (kg/m^3)	STOWAGE FACTOR (m^3/t)
Not applicable	-	-
SIZE	**CLASS**	**GROUP**
Not applicable	9	B

HAZARD
Contain a powerful allergen which, by inhalation of dust or by skin contact with crushed bean products, can give rise to severe irritation of the skin, eyes, and mucous membranes in some persons. They are also toxic by ingestion.

STOWAGE & SEGREGATION
"Separated from" foodstuffs and oxidizing materials (goods in packages and solid bulk materials).

HOLD CLEANLINESS
No special requirements.

WEATHER PRECAUTIONS
No special requirements.

LOADING
Trim in accordance with the relevant provisions required under sections 4 and 5 of the Code.

PRECAUTIONS
Due consideration shall be paid to prevent dust entering living quarters and working areas. Castor meal, castor pomace and castor flakes shall not be carried in bulk.
Appropriate precautions shall be taken to protect machinery and accommodation spaces from the dust of the cargo. Bilge wells of the cargo spaces shall be protected from ingress of the cargo. Due consideration shall be paid to protect equipment from the dust of the cargo. Persons, who may be exposed to the dust of the cargo, shall wear goggles or other equivalent dust eye-protection and dust filter masks. Those persons shall wear protective clothing, as necessary.

VENTILATION
Surface ventilation only, either natural or mechanical, shall be conducted, as necessary, during the voyage for this cargo.

CARRIAGE
No special requirements.

DISCHARGE
No special requirements.

CLEAN UP
After discharge of this cargo, the cargo spaces shall be thoroughly cleaned and washed out to remove all traces of the cargo.

EMERGENCY PROCEDURES

SPECIAL EMERGENCY EQUIPMENT TO BE CARRIED Protective clothing (gloves, boots, coveralls, headgear). Self-contained breathing apparatus. Spray nozzles.
EMERGENCY PROCEDURES Wear protective clothing and self-contained breathing apparatus. **EMERGENCY ACTION IN THE EVENT OF FIRE** Batten down. Use ship's fixed fire-fighting installation if available. Exclusion of air may be sufficient to control fire. **MEDICAL FIRST AID** Refer to the Medical First Aid Guide (MFAG), as amended.

CEMENT

DESCRIPTION

Cement is a finely ground powder which becomes almost fluid in nature when aerated or significantly disturbed thereby creating a very minimal angle of repose. After loading is completed de-aeration occurs almost immediately and the product settles into a stable mass. Cement dust can be a major concern during loading and discharge if the vessel is not specially designed as a cement carrier or shore equipment is not fitted with special dust control equipment.

CHARACTERISTICS

ANGLE OF REPOSE	BULK DENSITY (kg/m^3)	STOWAGE FACTOR (m^3/t)
Not applicable	1000 to 1493	0.67 to 1.00
SIZE	**CLASS**	**GROUP**
Up to 0.1 mm	Not applicable	C

HAZARD

It may shift when aerated.
This cargo is non-combustible or has a low fire-risk.

STOWAGE & SEGREGATION

No special requirements.

Clean and dry as relevant to the hazards of the cargo.

WEATHER PRECAUTIONS

This cargo shall be kept as dry as practicable. This cargo shall not be handled during precipitation. During handling of this cargo all non-working hatches of the cargo spaces into which this cargo is loaded or to be loaded shall be closed.

LOADING

The ship shall be kept upright during loading of this cargo. This cargo shall be so trimmed to the boundaries of the cargo space that the angle of the surface of the cargo with the horizontal plane does not exceed 25 degrees. Both the specific gravity and the flow characteristics of this cargo are dependent on the volume of air in the cargo. The volume of air in this cargo may be up to 12%. This cargo shows fluid state prior to settlement. The ship carrying this cargo shall not depart until the cargo has settled. After the settlement, shifting of the cargo is not liable to occur unless the angle of the surface with the horizontal plane exceeds 30 degrees.

PRECAUTIONS

Appropriate precautions shall be taken to protect machinery and accommodation spaces from the dust of the cargo. Bilge wells of the cargo spaces shall be protected from ingress of the cargo. Due consideration shall be paid to protect equipment from the dust of the cargo. Persons, who may be exposed to the dust of the cargo, shall wear protective clothing, goggles or other equivalent dust eye-protection and dust filter masks, as necessary. Bilge wells shall be clean, dry and covered as appropriate, to prevent ingress of the cargo.

VENTILATION
The cargo spaces carrying this cargo shall not be ventilated during voyage.

CARRIAGE
After the completion of loading of this cargo, the hatches of the cargo spaces shall be sealed, as necessary. All vents and access ways to the cargo spaces shall be shut during the voyage. Bilges in the cargo spaces carrying this cargo shall not be pumped unless special precautions are taken.

DISCHARGE
No special requirements.

CLEAN UP
In the case that the residues of this cargo are to be washed out, the cargo spaces and the other structures and equipment which may have been in contact with this cargo or its dust shall be thoroughly swept prior to washing out. Particular attention shall be paid to bilge wells and framework in the cargo spaces. The fixed bilge pumps shall not be used to pump the cargo spaces, because this cargo may make the bilge systems inoperative.

CEMENT CLINKERS

DESCRIPTION
Cement is formed by burning limestone with clay. This burning produces rough cinder lumps that are later crushed to a fine powder to produce cement. The rough cinder lumps are called clinker and are shipped in this form to avoid the difficulties of carrying cement powder.

CHARACTERISTICS

ANGLE OF REPOSE	BULK DENSITY (kg/m^3)	STOWAGE FACTOR (m^3/t)
Not applicable	1190 to 1639	0.61 to 0.84
SIZE	**CLASS**	**GROUP**
0 mm to 40 mm	Not applicable	C

HAZARD
No special hazards.
This cargo is non-combustible or has a low fire-risk.

STOWAGE & SEGREGATION
No special requirements.

HOLD CLEANLINESS
Clean and dry as relevant to the hazards of the cargo.

WEATHER PRECAUTIONS
This cargo shall be kept as dry as practicable. This cargo shall not be handled during precipitation. During handling of this cargo all non-working hatches of the cargo spaces into which this cargo is loaded or to be loaded shall be closed.

LOADING
Trim in accordance with the relevant provisions required under sections 4 and 5 of the Code.

PRECAUTIONS
Appropriate precautions shall be taken to protect machinery and accommodation spaces from the dust of the cargo. Bilge wells of the cargo spaces shall be protected from ingress of the cargo. Due consideration shall be paid to protect equipment from the dust of the cargo. Persons, who may be exposed to the dust of the cargo, shall wear protective clothing, goggles or other equivalent dust eye-protection and dust filter masks, as necessary. Bilge wells shall be clean, dry and covered as appropriate, to prevent ingress of the cargo.

VENTILATION
The cargo spaces carrying this cargo shall not be ventilated during voyage.

CARRIAGE
After the completion of loading of this cargo, the hatches of the cargo spaces shall be sealed. All vents and access ways to the cargo spaces shall be shut during the voyage. Bilges in the cargo spaces carrying this cargo shall not be pumped unless special precautions are taken.

DISCHARGE
No special requirements.

CLEAN UP
In the case that the residues of this cargo are to be washed out, the cargo spaces and the other structures and equipment which may have been in contact with this cargo or its dust shall be thoroughly swept prior to washing out.

CHAMOTTE

DESCRIPTION
Burned clay. Grey. Shipped in the form of fine crushed stone. Used by zinc smelters and in manufacture of firebrick (road metal). Dusty.

CHARACTERISTICS

ANGLE OF REPOSE	BULK DENSITY (kg/m^3)	STOWAGE FACTOR (m^3/t)
Not applicable	667	1.50
SIZE	**CLASS**	**GROUP**
Up to 10 mm	Not applicable	C

HAZARD
No special hazards.
This cargo is non-combustible or has a low fire-risk.

STOWAGE & SEGREGATION
No special requirements.

HOLD CLEANLINESS
No special requirements.

WEATHER PRECAUTIONS
No special requirements.

LOADING
Trim in accordance with the relevant provisions required under sections 4 and 5 of the Code.

PRECAUTIONS
Appropriate precautions shall be taken to protect machinery and accommodation spaces from the dust of the cargo. Bilge wells of the cargo spaces shall be protected from ingress of the cargo. Due consideration shall be paid to protect equipment from the dust of the cargo. Persons, who may be exposed to the dust of the cargo, shall wear protective clothing, goggles or other equivalent dust eye-protection and dust filter masks, as necessary.

VENTILATION
No special requirements.

CARRIAGE
No special requirements.

DISCHARGE
No special requirements.

CLEAN UP
No special requirements.

CHARCOAL

DESCRIPTION
Wood burnt at a high temperature with as little exposure to air as possible. Very dusty, light cargo. Can absorb moisture to about 18 to 70% of its weight. Black powder or granules.

CHARACTERISTICS

ANGLE OF REPOSE	BULK DENSITY (kg/m^3)	STOWAGE FACTOR (m^3/t)
Not applicable	199	5.02
SIZE	**CLASS**	**GROUP**
–	MHB	B

HAZARD
May ignite spontaneously. Contact with water may cause self-heating. Liable to cause oxygen depletion in the cargo space. Hot charcoal screenings in excess of 55°C should not be loaded.

STOWAGE & SEGREGATION
Segregation as required for class 4.1 materials. "Separated from" oily materials.

HOLD CLEANLINESS
Clean and dry as relevant to the hazards of the cargo.

WEATHER PRECAUTIONS
This cargo shall be kept as dry as practicable. This cargo shall not be handled during precipitation. During handling of this cargo all non-working hatches of the cargo spaces into which this cargo is loaded or to be loaded shall be closed.

LOADING
Trim in accordance with the relevant provisions required under sections 4 and 5 of the Code.

PRECAUTIONS
Charcoal in class 4.2 shall not be carried in bulk. This cargo shall be exposed to the weather for not less than 13 days prior to shipment. Prior to loading, the manufacturer or shipper shall give the master a certificate stating that the cargo is not class 4.2 in accordance with the result of the test approved by the competent authority*.. The certificate shall also state that this cargo have been weathered for not less than 13 days. This cargo shall only be accepted for loading when the actual moisture content of the cargo is not more than 10%.
Appropriate precautions shall be taken to protect machinery and accommodation spaces from the dust of the cargo. Bilge wells of the cargo spaces shall be protected from ingress of the cargo. Due consideration shall be paid to protect equipment from the dust of the cargo. Persons, who may be exposed to the dust of the cargo, shall wear protective clothing, goggles or other equivalent dust eye-protection and dust filter masks, as necessary.

Footnote * Reference is made in section 6 of appendix 2 to this Code.

VENTILATION
No special requirements.

CARRIAGE
No special requirements.

DISCHARGE
No special requirements.

CLEAN UP
No special requirements.

EMERGENCY PROCEDURES

SPECIAL EMERGENCY EQUIPMENT TO BE CARRIED Nil
EMERGENCY PROCEDURES Nil **EMERGENCY ACTION IN THE EVENT OF FIRE** Batten down; use ship's fixed fire-fighting installation if fitted. Exclusion of air may be sufficient to control fire. **MEDICAL FIRST AID** Refer to the Medical First Aid Guide (MFAG), as amended.

CHOPPED RUBBER AND PLASTIC INSULATION

DESCRIPTION
Plastic and rubber insulation material, clean and free from other materials, in granular form

CHARACTERISTICS

ANGLE OF REPOSE	BULK DENSITY (kg/m^3)	STOWAGE FACTOR (m^3/t)
Not applicable	500 - 570	1.76 - 1.97
SIZE	**CLASS**	**GROUP**
Granular 1 to 4 mm	Not applicable	C

HAZARD
No special hazards.
This cargo is non-combustible or has a low fire-risk.

STOWAGE & SEGREGATION
No special requirements.

HOLD CLEANLINESS
No special requirements.

WEATHER PRECAUTIONS
No special requirements.

LOADING
Trim in accordance with the relevant provisions required under sections 4 and 5 of the Code.

PRECAUTIONS
During handling and carriage no hotwork, burning and smoking shall be permitted in the vicinity of the cargo spaces containing this cargo. Prior to shipment, a certificate shall be given to the master by the shipper stating that this cargo consists of clean plastic and rubber material only. When the planned interval between the commencement of loading and the completion of discharge of this cargo exceeds 5 days, the cargo shall not be accepted for loading unless the cargo is to be carried in cargo spaces fitted with a fixed gas fire extinguishing system. The administration may, if it considers that the planned voyage does not exceed 5 days from the commencement of loading to the completion of discharge, exempt from the requirements of a fitted fixed gas fire-extinguishing system in the cargo spaces for the carriage of this cargo.

VENTILATION
No special requirements.

CARRIAGE
No special requirements.

DISCHARGE
No special requirements.

CLEAN UP
No special requirements.

CHROME PELLETS

DESCRIPTION
Pellets. Moisture: up to 2% maximum.

CHARACTERISTICS

ANGLE OF REPOSE	BULK DENSITY (kg/m^3)	STOWAGE FACTOR (m^3/t)
Not applicable	1667	0.6
SIZE	**CLASS**	**GROUP**
8 to 25 mm	Not applicable	C

HAZARD
No special hazards.
This cargo is non-combustible or has a low fire-risk.

STOWAGE & SEGREGATION
No special requirements.

HOLD CLEANLINESS
No special requirements.

WEATHER PRECAUTIONS
No special requirements.

LOADING
Trim in accordance with the relevant provisions required under sections 4 and 5 of the Code.

PRECAUTIONS
No special requirements.

VENTILATION
No special requirements.

CARRIAGE
No special requirements.

DISCHARGE
No special requirements.

CLEAN UP
No special requirements.

CHROMITE ORE

DESCRIPTION
Concentrates or lumpy, dark grey in colour.

CHARACTERISTICS

ANGLE OF REPOSE	BULK DENSITY (kg/m^3)	STOWAGE FACTOR (m^3/t)
Not applicable	2222 to 3030	0.33 to 0.45
SIZE	**CLASS**	**GROUP**
Up to 254 mm	Not applicable	C

HAZARD
Toxic by dust inhalation.
This cargo is non-combustible or has a low fire-risk.

STOWAGE & SEGREGATION
No special requirements.

HOLD CLEANLINESS
No special requirements.

WEATHER PRECAUTIONS
No special requirements.

LOADING
Trim in accordance with the relevant provisions required under sections 4 and 5 of the Code.

As the density of the cargo is extremely high, the tanktop may be overstressed unless the cargo is evenly spread across the tanktop to equalize the weight distribution. Due consideration shall be paid to ensure that tanktop is not overstressed during voyage and during loading by a pile of the cargo.

PRECAUTIONS
Appropriate precautions shall be taken to protect machinery and accommodation spaces from the dust of the cargo. Bilge wells of the cargo spaces shall be protected from ingress of the cargo. Due consideration shall be paid to protect equipment from the dust of the cargo. Persons, who may be exposed to the dust of the cargo, shall wear goggles or other equivalent dust eye-protection and dust filter masks. Those persons shall wear protective clothing, as necessary.

VENTILATION
No special requirements.

CARRIAGE
No special requirements.

DISCHARGE
No special requirements.

CLEAN UP
No special requirements.

CLAY

DESCRIPTION
Clay is usually light to dark grey and comprises 10% soft lumps and 90% soft grains. The material is usually moist but not wet to the touch. Moisture is up to 25%.

CHARACTERISTICS

ANGLE OF REPOSE	BULK DENSITY (kg/m^3)	STOWAGE FACTOR (m^3/t)
Not applicable	746 to 1515	0.66 to 1.34
SIZE	**CLASS**	**GROUP**
Up to 150 mm	Not applicable	C

HAZARD
No special hazards.
This cargo is non-combustible or has a low fire-risk.

STOWAGE & SEGREGATION
No special requirements.

HOLD CLEANLINESS
No special requirements.

WEATHER PRECAUTIONS
This cargo shall be kept as dry as practicable. This cargo shall not be handled during precipitation. During handling of this cargo all non-working hatches of the cargo spaces into which this cargo is loaded or to be loaded shall be closed.

LOADING
Trim in accordance with the relevant provisions required under sections 4 and 5 of the Code.

PRECAUTIONS
The moisture content of this cargo shall be kept as low as practicable to prevent the cargo becoming glutinous and handling of the cargo becoming extremely difficult.

VENTILATION
No special requirements.

CARRIAGE
No special requirements.

DISCHARGE
No special requirements.

CLEAN UP
Prior to washing out the residues of this cargo, the bilge wells of the cargo spaces shall be cleaned.

COAL
(See also the appendix to this schedule)

DESCRIPTION
Coal (bituminous and anthracite) is a natural, solid, combustible material consisting of amorphous carbon and hydrocarbons.

CHARACTERISTICS

ANGLE OF REPOSE	BULK DENSITY (kg/m^3)	STOWAGE FACTOR (m^3/t)
Not applicable	654 to 1266	0.79 to 1.53
SIZE	**CLASS**	**GROUP**
Up to 50 mm	MHB	B (and A)

HAZARDS
Coal may create flammable atmospheres, may heat spontaneously, may deplete the oxygen concentration, may corrode metal structures. Can liquefy if predominantly fine 75% less than 5 mm coal.

STOWAGE & SEGREGATION
Refer to the appendix to this schedule.

HOLD CLEANLINESS
Clean and dry as relevant to the hazards of the cargo.

WEATHER PRECAUTIONS
When a cargo may liquefy during voyage in case that the moisture content of the cargo is in excess of its TML and the cargo is carried in a ship other than specially constructed or fitted cargo ship complying with the requirements in subsection 7.3.2 of this Code, the following provisions shall be complied with:

.1 the moisture content of the cargo shall be kept less than its TML during voyage;
.2 unless expressly provided otherwise in this individual schedule, the cargo shall not be handled during precipitation;
.3 unless expressly provided otherwise in this individual schedule, during handling of the cargo, all non-working hatches of the cargo spaces into which the cargo is loaded or to be loaded shall be closed;
.4 the cargo may be handled during precipitation provided that the actual moisture content of the cargo is sufficiently less than its TML so that the actual moisture content is not liable to be increased beyond the TML by the precipitation; and
.5 the cargo in a cargo space may be discharged during precipitation provided that the total amount of the cargo in the cargo space is to be discharged in the port.

LOADING
Trim in accordance with the relevant provisions required under sections 4 and 5 of the Code.

Without reasonable trimming, vertical cracks into the body of the coal may form permitting oxygen circulation and possible self-heating.

PRECAUTIONS
Bilge wells shall be clean, dry and covered as appropriate, to prevent ingress of the cargo. Refer to the appendix to this schedule.

VENTILATION
Refer to Special Precautions in the appendix to this schedule.

CARRIAGE
Refer to the appendix to this schedule.

DISCHARGE
No special requirements.

CLEAN UP
No special requirements.

EMERGENCY PROCEDURES

SPECIAL EMERGENCY EQUIPMENT TO BE CARRIED Nil
EMERGENCY PROCEDURES Nil **EMERGENCY ACTION IN THE EVENT OF FIRE** Batten down. Exclusion of air may be sufficient to control the fire. **Do not use water.** Seek expert advice and consider heading to the nearest port. **MEDICAL FIRST AID** Refer to the Medical First Aid Guide (MFAG), as amended.

REMARKS
The use of CO_2 or inert gas, if available, should be withheld until fire is apparent.

APPENDIX

COAL

Properties and characteristics

1. Coals may emit methane, a flammable gas. A methane/air mixture containing between 5% and 16% methane constitutes an explosive atmosphere which can be ignited by sparks or naked flame, e.g., electrical or frictional sparks, a match or lighted cigarette. Methane is lighter than air and may, therefore, accumulate in the upper region of the cargo space or other enclosed spaces. If the cargo space boundaries are not tight, methane can seep through into spaces adjacent to the cargo space.
2. Coals may be subject to oxidation, leading to depletion of oxygen and an increase in carbon dioxide or carbon monoxide concentrations in the cargo space. Carbon monoxide is an odourless gas, slightly lighter than air, and has flammable limits in air of 12% to 75% by volume. It is toxic by inhalation with an affinity for blood haemoglobin over 200 times that of oxygen.
3. Some coals may heat spontaneously and the spontaneous heating may lead to spontaneous combustion in the cargo space. Flammable and toxic gases, including carbon monoxide, may be produced.
4. Some coals may be liable to react with water and produce acids which may cause corrosion. Flammable and toxic gases, including hydrogen, may be produced. Hydrogen is an odourless gas, much lighter than air, and has flammable limits in air of 4% to 75% by volume.

Segregation and stowage requirements

1. Boundaries of cargo spaces where this cargo is carried *shall* be resistant to fire and liquids.
2. This cargo *shall* be "separated from" goods of classes 1 (Division 1.4), 2, 3, 4 and 5 in packaged form (see IMDG Code) and "separated from" solid bulk materials of classes 4 and 5.1.
3. Stowage of goods of class 5.1 in packaged form or solid bulk materials of class 5.1 above or below this cargo *shall* be prohibited.
4. The master *shall* ensure that this cargo is not stowed adjacent to hot areas.
5. This cargo *shall* be "separated longitudinally by an intervening complete compartment or hold from" goods of class 1 other than Division 1.4.

Note: For interpretation of these terms, see section 9.

General requirements for all types of these cargoes

1. Prior to loading, the shipper or his appointed agent shall provide in writing to the master the characteristics of the cargo and the recommended safe handling procedures for loading and transport of the cargo. As a minimum, the cargo's contract specifications for moisture content, sulphur content and size shall be stated, and especially whether the cargo may be liable to emit methane or self-heat.
2. Before loading, the master *shall* ensure the following:

2.1 All cargo spaces and bilge wells are clean and dry. Any residue of waste material or previous cargo is removed, including removable cargo battens; and

2.2 All electrical cables and components situated in cargo spaces and adjacent spaces are free from defects. Such cables and electrical components are safe for use in an explosive atmosphere or positively isolated.

3 The ship *shall* be suitably fitted and carry on board appropriate instruments for measuring the following without requiring entry in the cargo space:
.1 concentration of methane in the atmosphere;
.2 concentration of oxygen in the atmosphere;
.3 concentration of carbon monoxide in the atmosphere; and
.4 pH value of cargo space bilge samples.

4 These instruments *shall* be regularly serviced and calibrated. Ship personnel *shall* be trained in the use of such instruments. Details of gas measurement procedures are given at the end of this appendix.

5. It is recommended that means be provided for measuring the temperature of the cargo in the range 0°C to 100°C to enable the measurement of temperature of the cargo while being loaded and during voyage without requiring entry into the cargo space.

6. Smoking and the use of naked flames *shall* not be permitted in the cargo areas and adjacent spaces and appropriate warning notices *shall* be posted in conspicuous places. Burning, cutting, chipping, welding or other sources of ignition *shall* not be permitted in the vicinity of cargo spaces or in other adjacent spaces, unless the space has been properly ventilated and the methane gas measurements indicate it is safe to do so.

7. Prior to departure, the master shall be satisfied that the surface of the material has been trimmed reasonably level to the boundaries of the cargo space to avoid the formation of gas pockets and to prevent air from permeating the body of the briquettes. Casings leading into the cargo space *shall* be adequately sealed. The shipper *shall* ensure that the master receives the necessary co-operation from the loading terminal.

8. The atmosphere in the space above the cargo in each space *shall* be regularly monitored for the concentration of methane, oxygen and carbon monoxide. Details of gas monitoring procedures are given at the end of this appendix. The results of monitoring shall be recorded. The frequency of the monitoring *shall* be determined based upon the information provided by the shipper and the information obtained through the analysis of the atmosphere in the cargo space.

9. Unless expressly provided otherwise, surface ventilation shall be conducted in all cargo spaces carrying this cargo for the first 24 hours after departure from the loading port. During this period, the atmosphere in the cargo spaces *shall* be monitored once from one sample point per cargo space and for the purpose of the gas monitoring, the ventilation shall be stopped for an appropriate period prior to the gas monitoring.

10. When the methane concentrations monitored within 24 hours after departure are at an acceptably low level, the ventilation openings *shall* be closed and the atmosphere in the cargo spaces shall be monitored. When the methane concentrations monitored within 24 hours after departure are not at an acceptably low level, surface ventilation *shall* be maintained, except for an appropriate period for gas monitoring, and the atmosphere in the cargo spaces shall be monitored. This procedure shall be followed until the methane concentrations become acceptably low level. In either event, the atmosphere in the cargo spaces *shall* be monitored on a daily basis.

11. When significant concentrations of methane is subsequently observed in unventilated cargo spaces, the appropriate special precautions for coals emitting methane *shall* apply.

12. The master *shall* ensure, as far as practicable, that any gases which may be emitted from this cargo do not accumulate in adjacent enclosed spaces.

13. The master *shall* ensure that enclosed working spaces such as storerooms, carpenter's shop, passageways, tunnels, etc. are regularly monitored for the presence of methane, oxygen and carbon monoxide. Such spaces *shall* be adequately ventilated.

14. Regular hold bilge testing *shall* be systematically carried out during voyage carrying this cargo. If the pH monitoring indicates that a corrosion risk exists, bilges shall be

frequently pumped out during the voyage in order to avoid possible accumulation of acids on tank tops and in the bilge system.

15. If the behaviour of the cargo during the voyage differs from that specified in the cargo declaration, the master *shall* report such differences to the shipper. Such reports will enable the shipper to maintain records on the behaviour of the coal cargoes, so that the information provided to the master can be reviewed in the light of transport experience.

Special Precautions

1 Coals emitting methane

When the shipper has informed that the cargo is liable to emit methane or analysis of the atmosphere in the cargo space indicates the presence of methane in excess of 20% of the Lower Explosion Limit (LEL), the following additional precautions *shall* be taken:

.1 Adequate surface ventilation *shall* be maintained, except for an appropriate period for the purpose of gas monitoring. .

.2 Care *shall* be taken to remove any accumulated gases prior to operation of the hatch covers or other openings for any reason, including discharging. Care shall be taken to operate hatch covers of the cargo spaces and other openings to avoid creating sparks. Smoking and the use of naked flame *shall* be prohibited.

.3 Personnel *shall* not be permitted to enter the cargo space or enclosed adjacent spaces unless the space has been ventilated and the atmosphere tested and found to be gas-free and to have sufficient oxygen to support life. Notwithstanding this provision, emergency entry into the cargo space may be permitted without ventilation, testing the atmosphere or the both, provided that the entry into the cargo space is undertaken only by trained personnel wearing self-contained breathing apparatus under the supervision of a responsible officer and special precautions are observed to ensure that no source of ignition is carried into the space.

.4 The master *shall* ensure that enclosed working spaces such as storerooms, carpenter's shops, passageways, tunnels, etc. are regularly monitored for the presence of methane. Such spaces *shall* be adequately ventilated and, in the case of mechanical ventilation, only equipment safe for use in an explosive atmosphere *shall* be used.

2 Self-heating coals

When the shipper informed that the cargo is likely to self-heat or analysis of the atmosphere in the cargo space indicates an increasing concentration of carbon monoxide, then the following additional precautions *shall* be taken:

.1 The cargo spaces *shall* be closed immediately after completion of loading in each cargo space. The hatch covers may also be additionally sealed with a suitable sealing tape. Only natural surface ventilation shall be permitted and ventilation *shall* be limited to the absolute minimum time necessary to remove methane which may have accumulated.

.2 Personnel *shall* not enter the cargo space during voyage, unless they are wearing self-contained breathing apparatus and access is critical to safety of life and the safety of the ship.

.3 Prior to loading, temperature of this cargo shall be monitored. This cargo shall only be accepted for loading when the temperature of the cargo is not higher than 55°C.

.4 When the carbon monoxide level is increasing steadily, a potential self-heating may be developing. In such a case, the cargo space *shall* be completely closed and all ventilation ceased, and the master *shall* seek expert advice immediately. Water *shall* not be used for cooling material or fighting coal cargo fires at sea, but may be used for cooling the boundaries of the cargo space.

.5 When the carbon monoxide level in any cargo space reaches 50 ppm or exhibit a steady rise over three consecutive days, a self-heating condition may be developing and the master shall inform the shipper and the company of, at least, the following information after an accurate assessment of the situation is to be achieved:

(a) identity of the cargo spaces involved; monitoring results covering carbon monoxide, methane and oxygen concentrations;
(b) if available, temperature of the cargo, location and method used to obtain results;
(c) time gas sample taken (monitoring routine);
(d) time ventilators opened/closed;
(e) quantity of coal in hold(s) involved;
(f) type of coal as per cargo information, and any special precautions indicated on information;
(g) date loaded, and ETA at intended discharge port (which *shall* be specified); and
(h) comments or observations from the ship's master.

Procedures for gas monitoring of coal cargoes

1 Observations

1.1 Carbon monoxide monitoring, when conducted in accordance with the following procedures, will provide a reliable early indication of self-heating within this cargo. This allows preventive action to be considered without delay.

A steady rise in the level of carbon monoxide detected within a cargo space is a conclusive indication that self-heating is taking place.

1.2 All vessels engaged in the carriage of this cargo *shall* carry on board an instrument for measuring methane, oxygen and carbon monoxide gas concentrations, to enable the monitoring of the atmosphere within the cargo space. This instrument *shall* be regularly serviced and calibrated in accordance with the manufacturer's instructions. Care shall be exercised in interpreting methane measurements carried out in the low oxygen concentrations often found in unventilated cargo holds. The catalytic sensors normally used for the detection of methane rely on the presence of sufficient oxygen for accurate measurement. This phenomenon does not affect the measurement of carbon monoxide, or measurement of methane by infrared sensor. Further guidance may be obtained from the instrument manufacturer.

2 Sampling and measurement procedure

2.1 Equipment

2.1.1 An instrument which is capable of measuring methane, oxygen and carbon monoxide concentrations shall be provided on board a ship carrying this cargo. The instrument *shall* be fitted with an aspirator, flexible connection and a length of spark-proof metal tubing to enable a representative sample to be obtained from within the square of the hatch.

2.1.2 When recommended by the manufacturer, a suitable filter *shall* be used to protect the instrument against the ingress of moisture. The presence of even a small amount of moisture will compromise the accuracy of the measurement.

2.2 Siting of sampling points

2.2.1 In order to obtain meaningful information about the behaviour of this cargo in a cargo space, gas measurements *shall* be made via one sample point per cargo space. To ensure flexibility of measurement in adverse weather two sample points *shall* be provided per cargo space, one on the port side and one on the starboard side of the hatch cover or hatch coaming. (Refer to the diagram of gas sampling point.) Measurement from either of these locations is satisfactory.

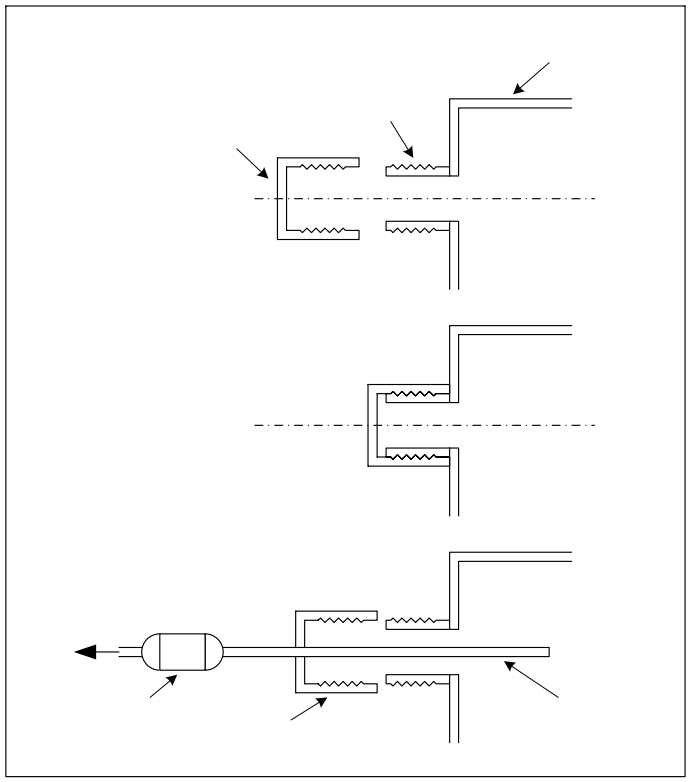

Diagram of gas sampling point

2.2.2 Each sample point *shall* comprise a hole of diameter approximately 12 mm positioned as near to the top of the hatch coaming as possible. It *shall* be sealed with a sealing cap to prevent ingress of water and air. It is essential that this cap is securely replaced after each measurement to maintain a tight seal.

2.2.3 The provisions of any sample point *shall* not compromise the seaworthiness of the vessel.

2.3 Measurement

The explanation on procedures for measurement is as follows:

.1 remove the sealing cap, insert the spark-proof metal tube into the sampling point and tighten the collar to ensure an adequate seal;

.2 connect the instrument to the sampling tube;

.3 draw a sample of the atmosphere through the tube, using the aspirator, until steady readings are obtained;

.4 log the results on a form which records cargo space, date and time for each measurement; and

.5 put back the sealing cap.

2.4 Measurement strategy

The identification of incipient self-heating from measurement of gas concentrations is more readily achieved under unventilated conditions. This is not always desirable because of the possibility of the accumulation of methane to dangerous concentrations. This is primarily, but not exclusively, a problem in the early stages of a voyage. Therefore it is recommended that cargo spaces are initially ventilated until measured methane concentrations are at an acceptably low level.

2.5 Measurement in unventilated holds

Under normal conditions one measurement per day is sufficient as a precautionary measure. However, if carbon monoxide levels are higher than 30 ppm then the frequency *shall* be increased to at least twice a day at suitably spaced intervals. Any additional results *shall* be logged.

2.6 Measurement in ventilated holds

2.6.1 If the presence of methane is such that the ventilators are required to remain open, then a different procedure *shall* be applied to enable the onset of any incipient self-heating to be detected.

2.6.2 To obtain meaningful data the ventilators *shall* be closed for a period before the measurements are taken. This period may be chosen to suit the operational requirements of the vessel, but it is recommended that it is not less than four hours. It is vital in the interests of data interpretation that the shutdown time is constant whichever time period is selected. These measurements *shall* be taken on a daily basis.

COAL SLURRY

DESCRIPTION
Coal slurry is a mixture of fine particles of coal and water.

CHARACTERISTICS

ANGLE OF REPOSE	BULK DENSITY (kg/m^3)	STOWAGE FACTOR (m^3/t)
Not applicable	870 to 1020	0.98 to 1.15
SIZE	**CLASS**	**GROUP**
Under 1 mm	Not applicable	A

HAZARD
Coal slurry is liable to liquefy during sea transport. Spontaneous combustion is possible if the coal dries out but is unlikely under normal conditions.
This cargo is non-combustible or has a low fire-risk.

STOWAGE & SEGREGATION
No special requirements.

HOLD CLEANLINESS
Clean and dry as relevant to the hazards of the cargo.

WEATHER PRECAUTIONS
When a cargo is carried in a ship other than specially constructed or fitted cargo ship complying with the requirements in subsection 7.3.2 of this Code, the following provisions shall be complied with:

.1 the moisture content of the cargo shall be kept less than its TML during voyage;
.2 unless expressly provided otherwise in this individual schedule, the cargo shall not be handled during precipitation;
.3 unless expressly provided otherwise in this individual schedule, during handling of the cargo, all non-working hatches of the cargo spaces into which the cargo is loaded or to be loaded shall be closed;
.4 the cargo may be handled during precipitation provided that the actual moisture content of the cargo is sufficiently less than its TML so that the actual moisture content is not liable to be increased beyond the TML by the precipitation; and
.5 the cargo in a cargo space may be discharged during precipitation provided that the total amount of the cargo in the cargo space is to be discharged in the port.

LOADING
Trim in accordance with the relevant provisions required under sections 4 and 5 of the Code.

PRECAUTIONS
Bilge wells shall be clean, dry and covered as appropriate, to prevent ingress of the cargo.

VENTILATION
As this cargo, in general, may emit methane, the cargo spaces carrying this cargo shall be tested regularly using a suitable gas detector and natural surface ventilation shall be conducted, as necessary.

CARRIAGE
The appearance of the surface of this cargo shall be checked regularly during voyage. If free water above the cargo or fluid state of the cargo is observed during voyage, the master shall take appropriate actions to prevent cargo shifting and potential capsize of the ship, and give consideration to seeking emergency entry into a place of refuge.

DISCHARGE
No special requirements.

CLEAN UP
No special requirements.

COARSE CHOPPED TYRES

DESCRIPTION
Chopped or shredded fragments of used tyres in coarse size.

CHARACTERISTICS

ANGLE OF REPOSE	BULK DENSITY (kg/m^3)	STOWAGE FACTOR (m^3/t)
Not applicable	555	1.8
SIZE	**CLASS**	**GROUP**
15x20 cm approximately	Not applicable	C

HAZARD
May self-heat slowly if contaminated by oily residual, if not properly aged before shipment and if offered to the shipment in smaller size than indicated in "characteristics".
This cargo is non-combustible or has a low fire-risk.

STOWAGE & SEGREGATION
No special requirements.

HOLD CLEANLINESS
Clean and dry as relevant to the hazards of the cargo.

WEATHER PRECAUTIONS
This cargo shall be kept as dry as practicable before loading, during loading and during voyage. This cargo shall not be loaded during precipitation. During loading of this cargo all non-working hatches of the cargo spaces to which this cargo are loaded or to be loaded shall be closed.

LOADING
Trim in accordance with the relevant provisions required under sections 4 and 5 of the Code.

PRECAUTIONS
During handling and carriage no hotwork, burning and smoking shall be permitted in the vicinity of the cargo spaces containing this cargo. Prior to shipment, a certificate shall be given to the master by the shipper stating that this cargo is free of oily products or oily residual and has been stored under cover but in the open air for not less than 15 days prior to shipment.
When the planned interval between the commencement of loading and the completion of discharge of this cargo exceeds 5 days, the cargo shall not be accepted for loading unless the cargo is to be carried in cargo spaces fitted with a fixed gas fire extinguishing system. The administration may, if it considers that the planned voyage does not exceed 5 days from the commencement of loading to the completion of discharge, exempt from the requirements of a fitted fixed gas fire-extinguishing system in the cargo spaces for the carriage of this cargo.

VENTILATION
No special requirements.

CARRIAGE
No special requirements.

DISCHARGE
No special requirements.

CLEAN UP
No special requirements.

COKE

DESCRIPTION
Grey lumps may contain fines (Breeze).

CHARACTERISTICS

ANGLE OF REPOSE	BULK DENSITY (kg/m^3)	STOWAGE FACTOR (m^3/t)
Not applicable	341 to 800	1.25 to 2.93
SIZE	**CLASS**	**GROUP**
Up to 200 mm	Not applicable	C

HAZARD
No special hazards.
This cargo is non-combustible or has a low fire-risk.

STOWAGE & SEGREGATION
No special requirements.

HOLD CLEANLINESS
No special requirements.

WEATHER PRECAUTIONS
No special requirements.

LOADING
Trim in accordance with the relevant provisions required under sections 4 and 5 of the Code.

PRECAUTIONS
Bilge wells shall be clean, dry and covered as appropriate, to prevent ingress of the cargo.

VENTILATION
No special requirements.

CARRIAGE
No special requirements.

DISCHARGE
No special requirements.

CLEAN UP
After discharge of this cargo, the bilge wells and the scuppers of the cargo spaces shall be checked and any blockage in the bilge wells and the scuppers shall be removed.

COKE BREEZE

DESCRIPTION
Greyish powder.

CHARACTERISTICS

ANGLE OF REPOSE	BULK DENSITY (kg/m^3)	STOWAGE FACTOR (m^3/t)
Not applicable	556	1.8
SIZE	**CLASS**	**GROUP**
less than 10 mm	Not applicable	A

HAZARD
Coke Breeze is liable to flow if it has sufficiently high moisture content.
This cargo is non-combustible or has a low fire-risk.

STOWAGE & SEGREGATION
No special requirements.

HOLD CLEANLINESS
No special requirements.

WEATHER PRECAUTIONS
When a cargo is carried in a ship other than specially constructed or fitted cargo ship complying with the requirements in subsection 7.3.2 of this Code, the following provisions shall be complied with:

.1 the moisture content of the cargo shall be kept less than its TML during voyage;
.2 unless expressly provided otherwise in this individual schedule, the cargo shall not be handled during precipitation;
.3 unless expressly provided otherwise in this individual schedule, during handling of the cargo, all non-working hatches of the cargo spaces into which the cargo is loaded or to be loaded shall be closed;
.4 the cargo may be handled during precipitation provided that the actual moisture content of the cargo is sufficiently less than its TML so that the actual moisture content is not liable to be increased beyond the TML by the precipitation; and
.5 the cargo in a cargo space may be discharged during precipitation provided that the total amount of the cargo in the cargo space is to be discharged in the port.

LOADING
Trim in accordance with the relevant provisions required under sections 4 and 5 of the Code.

PRECAUTIONS
Bilge wells shall be clean, dry and covered as appropriate, to prevent ingress of the cargo.

VENTILATION
The cargo spaces carrying this cargo shall not be ventilated during voyage.

CARRIAGE
The appearance of the surface of this cargo shall be checked regularly during voyage. If free water above the cargo or fluid state of the cargo is observed during voyage, the master shall take appropriate actions to prevent cargo shifting and potential capsize of the ship, and give consideration to seeking emergency entry into a place of refuge.

DISCHARGE
No special requirements.

CLEAN UP
After discharge of this cargo, the bilge wells and the scuppers of the cargo spaces shall be checked and any blockage in the bilge wells and the scuppers shall be removed.

COLEMANITE

DESCRIPTION
A natural hydrated calcium borate. Fine to lumps, light grey appearance similar to clay. Moisture approximately 7%.

CHARACTERISTICS

ANGLE OF REPOSE	BULK DENSITY (kg/m^3)	STOWAGE FACTOR (m^3/t)
Not applicable	1639	0.61
SIZE	**CLASS**	**GROUP**
Up to 300 mm	Not applicable	C

HAZARD
No special hazards.
This cargo is non-combustible or has a low fire-risk.

STOWAGE & SEGREGATION
No special requirements.

HOLD CLEANLINESS
No special requirements.

WEATHER PRECAUTIONS
No special requirements.

LOADING
Trim in accordance with the relevant provisions required under sections 4 and 5 of the Code.

PRECAUTIONS
No special requirements.

VENTILATION
No special requirements.

CARRIAGE
No special requirements.

DISCHARGE
No special requirements.

CLEAN UP
No special requirements.

COPPER GRANULES

DESCRIPTION
Sphere shaped pebbles. 75% copper with lead, tin, zinc, traces of others. Moisture content 1.5% approximately. Light grey colour when dry, dark green when wet. Odourless.

CHARACTERISTICS

ANGLE OF REPOSE	BULK DENSITY (kg/m^3)	STOWAGE FACTOR (m^3/t)
Not applicable	4000 to 4545	0.22 to 0.25
SIZE	**CLASS**	**GROUP**
Fines up to 10 mm Clinkers up to 50 mm	Not applicable	C

HAZARD
No special hazards.
This cargo is non-combustible or has a low fire-risk.

STOWAGE & SEGREGATION
No special requirements.

HOLD CLEANLINESS
No special requirements.

WEATHER PRECAUTIONS
No special requirements.

LOADING
Trim in accordance with the relevant provisions required under sections 4 and 5 of the Code.

As the density of the cargo is extremely high, the tanktop may be overstressed unless the cargo is evenly spread across the tanktop to equalize the weight distribution. Due consideration shall be paid to ensure that tanktop is not overstressed during voyage and during loading by a pile of the cargo.

PRECAUTIONS
No special requirements.

VENTILATION
No special requirements.

CARRIAGE
No special requirements.

DISCHARGE
No special requirements.

CLEAN UP
No special requirements.

COPPER MATTE

DESCRIPTION
Crude black copper ore. Composed of 75% copper and 25% impurities. Small metallic round stones or pellets. Odourless.

CHARACTERISTICS

ANGLE OF REPOSE	BULK DENSITY (kg/m^3)	STOWAGE FACTOR (m^3/t)
Not applicable	2857 to 4000	0.25 to 0.35
SIZE	**CLASS**	**GROUP**
3 mm to 25 mm	Not applicable	C

HAZARD
No special hazards.
This cargo is non-combustible or has a low fire-risk.

STOWAGE & SEGREGATION
No special requirements.

HOLD CLEANLINESS
No special requirements.

WEATHER PRECAUTIONS
No special requirements.

LOADING
Trim in accordance with the relevant provisions required under sections 4 and 5 of the Code.

As the density of the cargo is extremely high, the tanktop may be overstressed unless the cargo is evenly spread across the tanktop to equalize the weight distribution. Due consideration shall be paid to ensure that tanktop is not overstressed during voyage and during loading by a pile of the cargo.

PRECAUTIONS
No special requirements.

VENTILATION
No special requirements.

CARRIAGE
No special requirements.

DISCHARGE
No special requirements.

CLEAN UP
No special requirements.

COPRA (dry) UN 1363

DESCRIPTION
Dried kernels of coconuts with a penetrating rancid odour which may taint other cargoes.

CHARACTERISTICS

ANGLE OF REPOSE	BULK DENSITY (kg/m^3)	STOWAGE FACTOR (m^3/t)
Not applicable	500	2.0
SIZE	**CLASS**	**GROUP**
Not applicable	4.2	B

HAZARD
Liable to heat and ignite spontaneously especially when in contact with water. Liable to cause oxygen depletion in the cargo space.

STOWAGE & SEGREGATION
This cargo shall not be stowed on or adjacent to heated surfaces including fuel oil tanks.

HOLD CLEANLINESS
Clean and dry as relevant to the hazards of the cargo.

WEATHER PRECAUTIONS
This cargo shall be kept as dry as practicable. This cargo shall not be handled during precipitation. During handling of this cargo all non-working hatches of the cargo spaces into which this cargo is loaded or to be loaded shall be closed.

LOADING
Trim in accordance with the relevant provisions required under sections 4 and 5 of the Code.
This cargo shall not be accepted for loading when wet.

PRECAUTIONS
This cargo shall only be accepted for loading when the cargo has been weathered for at least one month before shipment or when the shipper provides the master with a certificate issued by a person recognized by the competent authority of the country of origin stating that the moisture content the cargo is not more than of 5%. Smoking and the use of naked lights in cargo spaces and adjacent areas shall be prohibited. Entry into the cargo space for this cargo shall not be permitted until the cargo space has been ventilated and the atmosphere tested for concentration of oxygen.

VENTILATION
Surface ventilation only, either natural or mechanical, shall be conducted, as necessary, during the voyage for this cargo.

CARRIAGE
The temperature of this cargo shall be measured and recorded regularly during voyage to monitor for possible self heating.

DISCHARGE
No special requirements.

CLEAN UP
No special requirements.

EMERGENCY PROCEDURES

SPECIAL EMERGENCY EQUIPMENT TO BE CARRIED Nil
EMERGENCY PROCEDURES Nil **EMERGENCY ACTION IN THE EVENT OF FIRE** Batten down; use ship's fixed fire-fighting installation if fitted. Exclusion of air may be sufficient to control fire. **MEDICAL FIRST AID** Refer to the Medical First Aid Guide (MFAG), as amended.

CRYOLITE

DESCRIPTION
A fluoride of sodium and aluminium used in the production of aluminium and for ceramic glazes. Grey pellets.

CHARACTERISTICS

ANGLE OF REPOSE	BULK DENSITY (kg/m^3)	STOWAGE FACTOR (m^3/t)
Not applicable	1429	0.70
SIZE	**CLASS**	**GROUP**
6.4 mm to 12.7 mm	Not applicable	C

HAZARD
Prolonged contact may cause serious damage to the skin and nervous system.
This cargo is non-combustible or has a low fire-risk.

STOWAGE & SEGREGATION
No special requirements.

HOLD CLEANLINESS
No special requirements.

WEATHER PRECAUTIONS
No special requirements.

LOADING
Trim in accordance with the relevant provisions required under sections 4 and 5 of the Code.

PRECAUTIONS
Appropriate precautions shall be taken to protect machinery and accommodation spaces from the dust of the cargo. Bilge wells of the cargo spaces shall be protected from ingress of the cargo. Due consideration shall be paid to protect equipment from the dust of the cargo. Persons, who may be exposed to the dust of the cargo, shall wear goggles or other equivalent dust eye-protection and dust filter masks. Those persons shall wear protective clothing, as necessary.

VENTILATION
No special requirements.

CARRIAGE
No special requirements.

DISCHARGE
No special requirements.

CLEAN UP
No special requirements.

DIAMMONIUM PHOSPHATE (D.A.P.)

DESCRIPTION
Odourless white crystals or powder. Depending on source it can be dusty. Hygroscopic.

CHARACTERISTICS

ANGLE OF REPOSE	BULK DENSITY (kg/m^3)	STOWAGE FACTOR (m^3/t)
30° to 40°	833 to 999	1.10 to 1.20
SIZE	**CLASS**	**GROUP**
Diameter: 2.54 mm	Not applicable	C

HAZARD
No special hazards.
This cargo is non-combustible or has a low fire-risk.
This cargo is hygroscopic and may harden in the cargo space under humid conditions.

STOWAGE & SEGREGATION
No special requirements.

HOLD CLEANLINESS
Clean and dry as relevant to the hazards of the cargo.

WEATHER PRECAUTIONS
This cargo shall be kept as dry as practicable. This cargo shall not be handled during precipitation. During handling of this cargo all non-working hatches of the cargo spaces into which this cargo is loaded or to be loaded shall be closed.

LOADING
Trim in accordance with the relevant provisions required under sections 4 and 5 of the Code.

PRECAUTIONS
Appropriate precautions shall be taken to protect machinery and accommodation spaces from the dust of the cargo. Bilge wells of the cargo spaces shall be protected from ingress of the cargo. Due consideration shall be paid to protect equipment from the dust of the cargo. Persons, who may be exposed to the dust of the cargo, shall wear protective clothing, goggles or other equivalent dust eye-protection and dust filter masks, as necessary.

VENTILATION
The cargo spaces carrying this cargo shall not be ventilated during voyage.

CARRIAGE
Condensation in the cargo spaces carrying this cargo, sweating of this cargo and entering of water from hatch covers to the cargo spaces shall be checked regularly during the voyage. Due attention shall be paid to the sealing of hatches of the cargo spaces.

DISCHARGE
If this cargo has hardened, it shall be trimmed to avoid the formation of overhangs, as necessary.

CLEAN UP
After discharge of this cargo, particular attention shall be paid to bilge wells of the cargo spaces.

DIRECT REDUCED IRON (A)
Briquettes, hot-moulded

DESCRIPTION
A metallic grey colloid material emanating from a densification process whereby the direct reduced iron (DRI) feed material is at a temperature greater than 650°C at time of moulding and has a density greater than 5.0 g/cm^3. Fines (under 4 mm) not to exceed 5%.

CHARACTERISTICS

ANGLE OF REPOSE	BULK DENSITY (kg/m^3)	STOWAGE FACTOR (m^3/t)
Not applicable	2500---3300	0.3 to 0.4 To be verified by the shipper
SIZE	**CLASS**	**GROUP**
Approximate size: Length 90 mm to 130 mm Width 80 mm to 100 mm Thickness 20 mm to 50 mm Briquette weight 0.5 to 2.0 kg Fines: under 4 mm	MHB	B

HAZARD
Material may slowly evolve hydrogen after contact with water. Temporary self-heating of about 30°C may be expected after material handling in bulk.
This cargo is non-combustible or has a low fire-risk.

STOWAGE & SEGREGATION
"Separated from" goods of classes 1 (Division 1.4), 2, 3, 4 and 5 and class 8 acids in packaged form (see IMDG Code).
"Separated from" solid bulk materials of classes 4 and 5.
"Separated longitudinally by an intervening complete compartment or hold from" goods of class 1 other than Division 1.4 C.
Boundaries of compartments where this cargo is carried shall be resistant to fire and liquid.

HOLD CLEANLINESS
The cargo spaces shall be clean, dry and free from salt and residues of previous cargoes.

WEATHER PRECAUTIONS
This cargo shall be kept as dry as practicable during loading and the voyage. Open storage is acceptable prior to loading. This cargo shall not be loaded during precipitation. During loading of this cargo all non-working hatches of the cargo spaces into which this cargo is loaded or to be loaded shall be closed.

LOADING
Trim in accordance with the relevant provisions required under sections 4 and 5 of the Code.

Due consideration shall be paid to evenly spreading the cargo across the tanktop to minimize the concentration of fines. This cargo shall not be loaded when the temperature is in excess of 65°C (150°F). Prior to loading wooden fixtures such as battens shall be removed.

PRECAUTIONS
Prior to loading this cargo, the shipper shall provide the master with a certificate issued by a person recognized by the competent authority of the country of shipment stating that the cargo, at the time of loading, is suitable for shipment and does not contain fines more than 5%. Where practicable, ballast tanks adjacent to the cargo spaces containing this cargo, other than double-bottom tanks, shall be kept empty. Weather deck closures shall be inspected and tested to ensure integrity. During discharge, a fine spray of fresh water may be applied to this cargo for dust control. The cargo temperature shall be monitored during loading. The shipper may provide advice in amplification of this Code but the advice shall not be contrary thereto in respect of safety.

Appropriate precautions shall be taken to protect machinery and accommodation spaces from the dust of the cargo. Bilge wells of the cargo spaces shall be protected from ingress of the cargo. Due consideration shall be paid to protect equipment from the dust of the cargo. Persons, who may be exposed to the dust of the cargo, shall wear protective clothing, goggles or other equivalent dust eye-protection and dust filter masks, as necessary. Radars and exposed radio communication equipment of the ship which carry this cargo shall be protected from the dust of this cargo. During handling of this cargo "NO SMOKING" signs shall be posted on decks and in areas adjacent to cargo spaces and no naked lights shall be permitted in these areas. Cargo spaces containing this cargo may become oxygen-depleted and precautions shall be taken upon entering the cargo spaces. Bilge wells shall be clean, dry and covered as appropriate, to prevent ingress of the cargo. Cargo spaces containing this cargo and adjacent spaces may become oxygen-depleted. Flammable gas may also build up in these spaces. All precautions shall be taken upon entering these spaces.

VENTILATION
Surface ventilation only, either natural or mechanical, shall be conducted, as necessary, during the voyage for this cargo. Ventilation shall be such that escaping gases cannot penetrate living quarters on or under deck.

CARRIAGE
For quantitative measurements of hydrogen, a suitable detector shall be on board while this cargo is carried. The detector shall be suitable for use in an atmosphere without oxygen and of certified safe type for use in explosive atmosphere. The concentrations of hydrogen in the cargo spaces carrying this cargo shall be measured regularly, during voyage, and the results of the measurements shall be recorded and kept on board.

DISCHARGE
No special requirements.

CLEAN UP
No special requirements.

EMERGENCY PROCEDURES

SPECIAL EMERGENCY EQUIPMENT TO BE CARRIED Nil
EMERGENCY PROCEDURES Nil **EMERGENCY ACTION IN THE EVENT OF FIRE** Batten down. **Do not use water**. Seek expert advice. Early application of an inert gas to a smouldering situation may be effective. Preparations should be made for grab discharge if serious heating occurs. **MEDICAL FIRST AID** Refer to the Medical First Aid Guide (MFAG), as amended.

DIRECT REDUCED IRON (B)
(not to be confused with iron sponge, spent) such as lumps, pellets and cold-moulded briquettes

DESCRIPTION
Direct Reduced Iron (DRI) (B) is a metallic material of a manufacturing process formed by the reduction (removal of oxygen) of iron oxide at temperatures below the fusion point of iron. Cold-moulded briquettes should be defined as those which have been moulded at a temperature of under 650°C or which have a density of less than 5.0 g/cm^3.

CHARACTERISTICS

ANGLE OF REPOSE	BULK DENSITY (kg/m^3)	STOWAGE FACTOR (m^3/t)
Not applicable	More than 2000	Up to 0.5
SIZE	**CLASS**	**GROUP**
Lumps and pellets: Average particle size 6 mm to 25 mm with up to 5% fines (under 4 mm) Cold-moulded briquettes: Approximate maximum dimensions 35 mm to 40 mm	MHB	B

HAZARD
DRI may react with water and air to produce hydrogen and heat. The heat produced may cause ignition. Oxygen in an enclosed space may be depleted.

STOWAGE & SEGREGATION
"Separated from" goods of classes 1 (Division 1.4S), 2, 3, 4 and 5 and class 8 acids in packaged form (see IMDG Code).
"Separated from" solid bulk materials of classes 4 and 5. Goods of class 1, other than Division 1.4S, should not be carried in the same ship.
Boundaries of compartments where this cargo is carried shall be resistant to fire and liquid.

HOLD CLEANLINESS
The cargo spaces shall be clean, dry and free from salt and residues of previous cargoes.
Wooden fixtures such as battens shall be removed.

WEATHER PRECAUTIONS
This cargo shall be kept as dry as practicable before loading, during loading and during voyage. This cargo shall not be loaded during precipitation. During loading of this cargo all non-working hatches of the cargo spaces to which this cargo are loaded or to be loaded shall be closed.

LOADING
Where practicable, adjacent ballast tanks, other than double-bottom tanks, shall be kept empty. Weather deck closures shall be inspected and tested to ensure integrity. This cargo shall not be accepted for loading if the temperature is in excess of 65°C (150°F).

PRECAUTIONS

Prior to loading this cargo, the shipper shall provide the master with a certificate issued by a person recognized by the competent authority of the country of shipment stating that the cargo, at the time of loading, is suitable for shipment. Shippers shall certify that the cargo conforms to the requirement of this Code. Prior to shipment, this cargo shall be aged for at least 72 hours, or treated with an air passivation technique, or some other equivalent method that reduces the reactivity of the material to at least the same level as the aged product. Hatches of the cargo space for this cargo shall be sealed. All ventilators and other openings of the cargo spaces shall be closed to maintain an inert atmosphere.

A. The shipper shall provide necessary specific instructions for carriage, either:
   1. prior to loading, provision should be made to introduce the inert gas at tank top level so that the whole of the cargo space can be maintained at a low oxygen level throughout the voyage. The cargo spaces shall be maintained under an inert atmosphere containing less than 5% oxygen. The hydrogen content of the atmosphere in the cargo spaces shall be maintained at less that 1% by volume; or
   2. that the cargo has been manufactured or treated with an oxidation and corrosion-inhibiting process which has been proved, to the satisfaction of the competent authority, to provide effective protection against dangerous reaction with seawater or air under shipping conditions.

B. The provision of paragraph A above may be waived or varied if agreed to by the competent authorities of the countries concerned, taking into account the sheltered nature, length, duration, or any other applicable conditions of any specific voyage.

The ship selected for the carriage of this cargo shall be suitable in all respects for the carriage of this cargo. Except as provided for under paragraph A2 above, any material which is wet or is known to have been wetted should not be accepted for carriage in bulk. The cargo shall be loaded, stowed and transported under dry conditions.

Appropriate precautions shall be taken to protect machinery and accommodation spaces from the dust of the cargo. Bilge wells of the cargo spaces shall be protected from ingress of the cargo. Due consideration shall be paid to protect equipment from the dust of the cargo. Persons, who may be exposed to the dust of the cargo, shall wear protective clothing, goggles or other equivalent dust eye-protection and dust filter masks, as necessary. Radars and exposed radio communication equipment of the ship which carry this cargo shall be protected from the dust of this cargo.

Bilge wells shall be clean, dry and covered as appropriate, to prevent ingress of the cargo. Cargo spaces containing this cargo and adjacent spaces may become oxygen-depleted. Flammable gas may also build up in these spaces. All precautions shall be taken upon entering these spaces.

VENTILATION

The cargo spaces carrying this cargo shall not be ventilated during voyage.

CARRIAGE

For quantitative measurements of oxygen and hydrogen, suitable detectors for each gas or combination of gases shall be on board while this cargo is carried. The detectors shall be suitable for use in an atmosphere without oxygen and of certified safe type for use in explosive atmosphere. The concentrations of these gases in the cargo spaces carrying this cargo shall be measured regularly, during voyage, and the results of the measurements shall be recorded and kept on board.

No smoking, burning, cutting, chipping or other source of ignition shall be allowed in the vicinity of the cargo spaces containing this cargo.

DISCHARGE
No special requirements.

CLEAN UP
No special requirements.

EMERGENCY PROCEDURES

SPECIAL EMERGENCY EQUIPMENT TO BE CARRIED Nil
EMERGENCY PROCEDURES Nil **EMERGENCY ACTION IN THE EVENT OF FIRE** Batten down. **Do not use water.** Seek expert advice. Early application of an inert gas to a smouldering situation may be effective. If a fire situation develops, the ship should make for the nearest suitable port and neither water, steam nor additional carbon dioxide should be used at this stage. If nitrogen gas is available, the use of this gas to keep the oxygen concentration down will contain the fire. Preparations should be made for grab discharge if serious heating occurs. **MEDICAL FIRST AID** Refer to the Medical First Aid Guide (MFAG), as amended.

DOLOMITE

DESCRIPTION
Dolomite is a light yellow/brown coloured mineral stone which is very hard and compact. Dolomite may sometimes, incorrectly, be used to describe a material consisting of the oxides of calcium and magnesium (dolomitic quicklime). In this case, see "LIME (UNSLAKED)".

CHARACTERISTICS

ANGLE OF REPOSE	BULK DENSITY (kg/m^3)	STOWAGE FACTOR (m^3/t)
Not applicable	1429 to 1667	0.6 to 0.7
SIZE	**CLASS**	**GROUP**
Up to 32 mm	Not applicable	C

HAZARD
No special hazards.
This cargo is non-combustible or has a low fire-risk.

STOWAGE & SEGREGATION
No special requirements.

HOLD CLEANLINESS
No special requirements.

WEATHER PRECAUTIONS
No special requirements.

LOADING
Trim in accordance with the relevant provisions required under sections 4 and 5 of the Code.

PRECAUTIONS
No special requirements.

VENTILATION
No special requirements.

CARRIAGE
No special requirements.

DISCHARGE
No special requirements.

CLEAN UP
No special requirements.

FELSPAR LUMP

DESCRIPTION
Crystalline minerals consisting of silicates of aluminium with potassium sodium, calcium and barium. White or reddish in colour.

CHARACTERISTICS

ANGLE OF REPOSE	BULK DENSITY (kg/m^3)	STOWAGE FACTOR (m^3/t)
Not applicable	1667	0.60
SIZE	**CLASS**	**GROUP**
0.1 mm to 300 mm	Not applicable	C

HAZARD
No special hazards.
This cargo is non-combustible or has a low fire-risk.

STOWAGE & SEGREGATION
No special requirements.

HOLD CLEANLINESS
No special requirements.

WEATHER PRECAUTIONS
No special requirements.

LOADING
Trim in accordance with the relevant provisions required under sections 4 and 5 of the Code.

PRECAUTIONS
No special requirements.

VENTILATION
No special requirements.

CARRIAGE
No special requirements.

DISCHARGE
No special requirements.

CLEAN UP
No special requirements.

FERROCHROME

DESCRIPTION
Raw material of iron mixed with chrome. Extremely heavy cargo.

CHARACTERISTICS

ANGLE OF REPOSE	BULK DENSITY (kg/m^3)	STOWAGE FACTOR (m^3/t)
Not applicable	3571 to 5556	0.18 to 0.26
SIZE	**CLASS**	**GROUP**
Up to 300 mm	Not applicable	C

HAZARD
No special hazards.
This cargo is non-combustible or has a low fire-risk.

STOWAGE & SEGREGATION
No special requirements.

HOLD CLEANLINESS
No special requirements.

WEATHER PRECAUTIONS
No special requirements.

LOADING
Trim in accordance with the relevant provisions required under sections 4 and 5 of the Code.

As the density of the cargo is extremely high, the tanktop may be overstressed unless the cargo is evenly spread across the tanktop to equalize the weight distribution. Due consideration shall be paid to ensure that tanktop is not overstressed during voyage and during loading by a pile of the cargo.

PRECAUTIONS
No special requirements.

VENTILATION
No special requirements.

CARRIAGE
No special requirements.

DISCHARGE
No special requirements.

CLEAN UP
No special requirements.

FERROCHROME, *exothermic*

DESCRIPTION
An alloy of iron and chromium. Extremely heavy cargo.

CHARACTERISTICS

ANGLE OF REPOSE	BULK DENSITY (kg/m^3)	STOWAGE FACTOR (m^3/t)
Not applicable	3571 to 5556	0.18 to 0.28
SIZE	**CLASS**	**GROUP**
Up to 300 mm	Not applicable	C

HAZARD
No special hazards.
This cargo is non-combustible or has a low fire-risk.

STOWAGE & SEGREGATION
No special requirements.

HOLD CLEANLINESS
No special requirements.

WEATHER PRECAUTIONS
No special requirements.

LOADING
Trim in accordance with the relevant provisions required under sections 4 and 5 of the Code.

As the density of the cargo is extremely high, the tanktop may be overstressed unless the cargo is evenly spread across the tanktop to equalize the weight distribution. Due consideration shall be paid to ensure that tanktop is not overstressed during voyage and during loading by a pile of the cargo.

PRECAUTIONS
During loading, carriage and discharging, welding or other hot work shall not be carried out in the vicinity of the cargo spaces containing this cargo.

VENTILATION
No special requirements.

CARRIAGE
No special requirements.

DISCHARGE
No special requirements.

CLEAN UP
No special requirements.

FERROMANGANESE

DESCRIPTION
Raw material or iron mixed with manganese.

CHARACTERISTICS

ANGLE OF REPOSE	BULK DENSITY (kg/m^3)	STOWAGE FACTOR (m^3/t)
Not applicable	3571 to 5556	0.18 to 0.28
SIZE	**CLASS**	**GROUP**
Up to 300 mm	Not applicable	C

HAZARD
No special hazards.
This cargo is non-combustible or has a low fire-risk.

STOWAGE & SEGREGATION
No special requirements.

HOLD CLEANLINESS
No special requirements.

WEATHER PRECAUTIONS
No special requirements.

LOADING
Trim in accordance with the relevant provisions required under sections 4 and 5 of the Code.

As the density of the cargo is extremely high, the tanktop may be overstressed unless the cargo is evenly spread across the tanktop to equalize the weight distribution. Due consideration shall be paid to ensure that tanktop is not overstressed during voyage and during loading by a pile of the cargo.

PRECAUTIONS
No special requirements.

VENTILATION
No special requirements.

CARRIAGE
No special requirements.

DISCHARGE
No special requirements.

CLEAN UP
No special requirements.

FERRONICKEL

DESCRIPTION
An alloy of iron and nickel.

CHARACTERISTICS

ANGLE OF REPOSE	BULK DENSITY (kg/m^3)	STOWAGE FACTOR (m^3/t)
Not applicable	4167	0.24
SIZE	**CLASS**	**GROUP**
Up to 300 mm	Not applicable	C

HAZARD
No special hazards.
This cargo is non-combustible or has a low fire-risk.

STOWAGE & SEGREGATION
No special requirements.

HOLD CLEANLINESS
No special requirements.

WEATHER PRECAUTIONS
No special requirements.

LOADING
Trim in accordance with the relevant provisions required under sections 4 and 5 of the Code.

As the density of the cargo is extremely high, the tanktop may be overstressed unless the cargo is evenly spread across the tanktop to equalize the weight distribution. Due consideration shall be paid to ensure that tanktop is not overstressed during voyage and during loading by a pile of the cargo.

PRECAUTIONS
No special requirements.

VENTILATION
No special requirements.

CARRIAGE
No special requirements.

DISCHARGE
No special requirements.

CLEAN UP
No special requirements.

FERROPHOSPHORUS
(including briquettes)

DESCRIPTION
An alloy of iron and phosphorus used in the steel industry.

CHARACTERISTICS

ANGLE OF REPOSE	BULK DENSITY (kg/m^3)	STOWAGE FACTOR (m^3/t)
Not applicable	5000	(0.2 for briquettes)
SIZE	**CLASS**	**GROUP**
Diameter: 2.54 mm	MHB	B

HAZARD
May evolve flammable and toxic gases (e.g. phosphine) in contact with water.
This cargo is non-combustible or has a low fire-risk.

STOWAGE & SEGREGATION
Segregation as for class 4.3 materials. "Separated from" foodstuffs and class 8 liquids.

HOLD CLEANLINESS
Clean-and dry as relevant to the hazards of the cargo.

WEATHER PRECAUTIONS
This cargo shall be kept as dry as practicable. This cargo shall not be handled during precipitation. During handling of this cargo all non-working hatches of the cargo spaces into which this cargo is loaded or to be loaded shall be closed.

LOADING
Trim in accordance with the relevant provisions required under sections 4 and 5 of the Code.

As the density of the cargo is extremely high, the tanktop may be overstressed unless the cargo is evenly spread across the tanktop to equalize the weight distribution. Due consideration shall be paid to ensure that tanktop is not overstressed during voyage and during loading by a pile of the cargo.

PRECAUTIONS
This cargo shall be kept as dry as reasonably practicable.

VENTILATION
Mechanical ventilation shall be conducted during the voyage for the cargo spaces carrying this cargo. Ventilation fans shall be of certified safe type for use in a flammable atmosphere. They shall normally be run continuously whenever this cargo is on board. Where this is impracticable, they shall be operated as weather permits and in any case for a reasonable period prior to discharge.

CARRIAGE
No special requirements.

DISCHARGE
No special requirements.

CLEAN UP
After discharge of this cargo, the cargo spaces shall be swept clean.
Water shall not be used for cleaning of the cargo space which has contained this cargo, because of danger of gas.

EMERGENCY PROCEDURES

SPECIAL EMERGENCY EQUIPMENT TO BE CARRIED Self-contained breathing apparatus.
EMERGENCY PROCEDURES Wear self-contained breathing apparatus. **EMERGENCY ACTION IN THE EVENT OF FIRE** Batten down and use CO_2 if available. **Do not use water.** **MEDICAL FIRST AID** Refer to the Medical First Aid Guide (MFAG), as amended.

FERROSILICON UN 1408
with 30% or more but less than 90% silicon
(including briquettes) (see appendix to this schedule)

DESCRIPTION
Ferrosilicon is an extremely heavy cargo.

CHARACTERISTICS

ANGLE OF REPOSE	BULK DENSITY (kg/m^3)		STOWAGE FACTOR (m^3/t)
Not applicable	1389 to 2083 (1111 to 1538 for briquettes)		0.48 to 0.72 (0.65 to 0.90 for briquettes)
SIZE	**CLASS**		**GROUP**
Up to 300 mm Briquettes	4.3	6.1	B

HAZARD
In contact with moisture or water it may evolve hydrogen, a flammable gas which may form explosive mixtures with air and may, under similar circumstances, produce phosphine and arsine, which are highly toxic gases.
This cargo is non-combustible or has a low fire-risk.

STOWAGE & SEGREGATION
"Separated from" foodstuffs and all class 8 liquids.

HOLD CLEANLINESS
Clean and dry as relevant to the hazards of the cargo.

WEATHER PRECAUTIONS
This cargo shall be kept as dry as practicable before loading, during loading and during voyage. This cargo shall not be loaded during precipitation. During loading of this cargo all non-working hatches of the cargo spaces to which this cargo are loaded or to be loaded shall be closed.

LOADING
Trim in accordance with the relevant provisions required under sections 4 and 5 of the Code. As the density of the cargo is extremely high, the tanktop may be overstressed unless the cargo is evenly spread across the tanktop to equalize the weight distribution. Due consideration shall be paid to ensure that tanktop is not overstressed during voyage and during loading by a pile of the cargo. Refer to the appendix to this schedule.

PRECAUTIONS
The manufacturer or the shipper shall provide the master with a certificate stating that, after manufacture, the cargo was stored under cover, but exposed to dry weather for not less than three days prior to shipment.

VENTILATION
Continuous mechanical ventilation shall be conducted during the voyage for the cargo spaces carrying this cargo. If maintaining ventilation endangers the ship or the cargo, it may be interrupted unless there is a risk of explosion or other danger due to interruption of the ventilation. In any case mechanical ventilation shall be maintained for a reasonable period prior to discharge. Refer to the appendix to this schedule.

CARRIAGE
For quantitative measurements of hydrogen, phosphine and arsine, suitable detectors for each gas or combination of gases shall be on board while this cargo is carried. The detectors shall be of certified safe type for use in explosive atmosphere. The concentrations of these gases in the cargo spaces carrying this cargo shall be measured regularly, during voyage, and the results of the measurements shall be recorded and kept on board.

DISCHARGE
Refer to the appendix to this schedule.

CLEAN UP
After discharge of this cargo, the cargo spaces shall be swept clean twice.
Water shall not be used for cleaning of the cargo space which has contained this cargo, because of danger of gas.

EMERGENCY PROCEDURES

SPECIAL EMERGENCY EQUIPMENT TO BE CARRIED Self-contained breathing apparatus.
EMERGENCY PROCEDURES Wear self-contained breathing apparatus. **EMERGENCY ACTION IN THE EVENT OF FIRE** Batten down and use CO_2 if available. **Do not use water**. **MEDICAL FIRST AID** Refer to the Medical First Aid Guide (MFAG), as amended.

APPENDIX

GENERAL REQUIREMENTS FOR CARRIAGE OF FERROSILICON

1. Chapter II-2 of SOLAS requires fire-fighter's outfits, full chemical protective suits and self-contained breathing apparatus to be readily available on board.
2. Gas concentrations *shall* be measured, during the voyage, at least once during every eight hours at each outlet ventilator and in any other accessible space adjacent to the cargo space carrying this cargo and the results shall be recorded in the log-book. Facilities shall be provided to make accurate determinations of the gas concentrations at each outlet ventilator without danger to the operator.
3. Ventilation fans shall be in operation at all times from commencement of loading until the cargo space is free of ferrosilicon.
4. The bilge wells shall be in a clean, dry condition before loading. The bilge timbers shall be in good condition and covered with double burlap.
5. The bilge wells shall be opened up and the cargo space washed out after discharging. A gas check shall be made before commencement of washing out.

DETAILED REQUIREMENTS

Prior to loading, the bulkheads to the engine room *shall* be inspected and approved by the competent authority as gastight and the safety of the bilge pumping arrangements shall be approved by the competent authority. Inadvertent pumping through machinery spaces *shall* be avoided.

(i) Where the bilge suction valve of the cargo space is located in the machinery space the valve shall be checked and the valve lid and seat lapped to a fine finish, as necessary. After re-assembly the valve shall be locked shut and a notice shall be placed adjacent to the valve warning against opening without the master's permission.

(ii) All pipes passing through the cargo space *shall* be in good order and condition. Hold atmosphere sampling units *shall* be effectively blanked off.

(iii) Electrical circuits for equipment in cargo spaces which is unsuitable for use in an explosive atmosphere shall be isolated by removal of links in the system other than fuses.

(iv) The cargo spaces *shall* be ventilated by at least two separate fans which *shall* be explosion-proof and arranged so that the escaping gas flow is separated from electrical cables and components. The total ventilation *shall* be at least 6 air changes per hour, based on an empty cargo space.

(v) Ventilator trunkings shall be in sound condition and so arranged to preclude interconnection of the atmosphere in the cargo space with other cargo spaces, accommodation or work areas.

Operational Requirements

(i) Smoking and naked flame shall be prohibited on deck in the vicinity of the cargo space or in the cargo space itself during loading or discharging.

(ii) Any portable lighting shall be safe for use in an explosive atmosphere.

(iii) The cargo shall be kept dry and during wet weather conditions cargo handling shall be suspended and the cargo space shall be closed.

(iv) Sets of self-contained breathing apparatus shall be located and stored for immediate use together with lifeline and a gas detector.

(v) Prior to commencement of discharging, the atmosphere in the cargo space shall be tested for the presence of toxic and flammable gases.

(vi) Checks for contaminant gases shall be carried out at 30-minute intervals while persons are in the cargo space.

(vii) Entry into the cargo space shall be prohibited when gas concentrations exceed the Threshold Limit Values, for phosphine (0.3 ppm) for arsine (0.05 ppm) or where the oxygen level is below 18%.

GASES RELEASES FROM FERROSILICON IMPURITIES WHEN WATER IS ADDED

(i) Arsine

Arsine is a toxic, colourless gas with a garlic like odour.

Toxicity

Arsine is a nerve and blood poison. There is generally a delay before the onset of symptoms (sometimes a day or so). These are at first indefinite.

Symptoms

1 Feeling of malaise, difficulty in breathing, severe headache, giddiness, fainting fits, nausea, vomiting and gastric disturbances.

2 In severe cases, vomiting may be pronounced, the mucous membranes may have a bluish discolouration and urine is dark and bloodstained. After a day or so there is severe anaemia and jaundice.

Concentration

A concentration of 500 ppm is lethal to humans after exposure of a few minutes, while concentrations of 250 ppm are dangerous to life after 30 minutes exposure. Concentrations of 6.25 to 15.5 ppm are dangerous after exposure of 30 to 60 minutes. A concentration of 0.05 ppm is the threshold long limit to which a person may be exposed.

(ii) Phosphine

Phosphine is colourless, flammable and highly toxic and has the odour of rotting fish.

Toxicity

Phosphine acts on the central nervous system and the blood.

Symptoms

The symptoms exhibited by phosphine poisoning are an oppressed feeling in the chest, headache, vertigo, general debility, loss of appetite and great thirst. Concentrations of 2000 ppm for a few minutes and 400 to 600 ppm are dangerous to life. 0.3 ppm is the maximum concentration tolerable for several hours without symptoms.

No long term exposures to this gas *shall* be permitted.

FERROSILICON
25% to 30% silicon, or 90% or more with silicon (including briquettes) (See appendix to this schedule)

DESCRIPTION
Ferrosilicon is an extremely heavy cargo.

CHARACTERISTICS

ANGLE OF REPOSE	BULK DENSITY (kg/m^3)	STOWAGE FACTOR (m^3/t)
Not applicable	1389 to 2083 (1111 to 1538 for briquettes)	0.48 to 0.72 (0.65 to 0.90 for briquettes)
SIZE	**CLASS**	**GROUP**
Diameter: 2.54 mm	MHB	B

HAZARD
In contact with moisture or water it may evolve hydrogen, a flammable gas which may form explosive mixtures with air and may, under similar circumstances, produce phosphine and arsine, which are highly toxic gases.
This cargo is non-combustible or has a low fire-risk.

STOWAGE & SEGREGATION
Segregation as required for class 4.3 materials. "Separated from" foodstuffs and all class 8 liquids.

HOLD CLEANLINESS
Clean and dry as relevant to the hazards of the cargo.

WEATHER PRECAUTIONS
This cargo shall be kept as dry as practicable before loading, during loading and during voyage. This cargo shall not be loaded during precipitation. During loading of this cargo all non-working hatches of the cargo spaces to which this cargo are loaded or to be loaded shall be closed.

LOADING
Trim in accordance with the relevant provisions required under sections 4 and 5 of the Code. Stow evenly across tank tops. Refer to the appendix to this schedule.

PRECAUTIONS
The manufacturer or the shipper shall provide the master with a certificate stating that, after manufacture, the cargo was stored under cover, but exposed to open air for not less than three days prior to shipment.

VENTILATION
Continuous mechanical ventilation shall be conducted during the voyage for the cargo spaces carrying this cargo. If maintaining ventilation endangers the ship or the cargo, it may be interrupted unless there is a risk of explosion or other danger due to interruption of the ventilation. In any case mechanical ventilation shall be maintained for a reasonable period prior to discharge. Refer to the appendix to this schedule.

CARRIAGE
For quantitative measurements of hydrogen, phosphine and arsine, suitable detectors for each gas or combination of gases shall be on board while this cargo is carried. The detectors shall be of certified safe type for use in explosive atmosphere. The concentrations of these gases in the cargo spaces carrying this cargo shall be measured regularly, during voyage, and the results of the measurements shall be recorded and kept on board.

DISCHARGE
Refer to the appendix to this schedule.

CLEAN UP
After discharge of this cargo, the cargo spaces shall be swept clean twice.
Water shall not be used for cleaning of the cargo space which has contained this cargo, because of danger of gas.

EMERGENCY PROCEDURES

SPECIAL EMERGENCY EQUIPMENT TO BE CARRIED Self-contained breathing apparatus.
EMERGENCY PROCEDURES Wear self-contained breathing apparatus. **EMERGENCY ACTION IN THE EVENT OF FIRE** Batten down and use CO_2 if available. Do not use water. **MEDICAL FIRST AID** Refer to the Medical First Aid Guide (MFAG), as amended.

APPENDIX

GENERAL REQUIREMENTS FOR CARRIAGE OF FERROSILICON

1. Two sets of self-contained breathing apparatus shall be carried in the ship in addition to normal fire-fighter's outfit.
2. Gas concentrations *shall* be measured, during the voyage, at least once during every eight hours at each outlet ventilator and in any other accessible space adjacent to the cargo space carrying this cargo and the results shall be recorded in the log-book. Facilities shall be provided to make accurate determinations of the gas concentrations at each outlet ventilator without danger to the operator.
3. Ventilation fans shall be in operation at all times from commencement of loading until the cargo space is free of ferrosilicon.
4. The bilge wells shall be in a clean, dry condition before loading. The bilge timbers shall be in good condition and covered with double burlap.
5. The bilge wells shall be opened up and the cargo space washed out after discharging. A gas check shall be made before commencement of washing out.

DETAILED REQUIREMENTS

Prior to loading, the bulkheads to the engine room *shall* be inspected and approved by the competent authority as gastight. Satisfaction with the safety of the bilge pumping arrangements shall be approved by the competent authority. Inadvertent pumping through machinery spaces *shall* be avoided.

(i) Where the bilge suction valve of the cargo space is located in the machinery space the valve shall be checked and the valve lid and seat lapped to a fine finish, as necessary. After re-assembly the valve shall be locked shut and a notice shall be placed adjacent to the valve warning against opening without the master's permission.

(ii) All pipes passing through the cargo space *shall* be in good order and condition. Hold atmosphere sampling units *shall* be effectively blanked off.

(iii) Electrical circuits for equipment in cargo spaces which is unsuitable for use in an explosive atmosphere shall be isolated by removal of links in the system other than fuses.

(iv) The cargo spaces *shall* be ventilated by at least two separate fans which *shall* be explosion-proof and arranged so that the escaping gas flow is separated from electrical cables and components. The total ventilation *shall* be at least 6 air changes per hour, based on an empty cargo space.

(v) Ventilator trunkings shall be in sound condition and so arranged to preclude interconnection of the atmosphere in the cargo space with other cargo spaces, accommodation or work areas.

Operational Requirements

(i) Smoking and naked flame shall be prohibited on deck in the vicinity of the cargo space or in the cargo space itself during loading or discharging.

(ii) Any portable lighting shall be safe for use in an explosive atmosphere.

(iii) The cargo shall be kept dry and during wet weather conditions cargo handling shall be suspended and the cargo space shall be closed.

(iv) Sets of self-contained breathing apparatus shall be located and stored for immediate use together with lifeline and a gas detector.

(v) Prior to commencement of discharging, the atmosphere in the cargo space shall be tested for the presence of toxic and flammable gases.

(vi) Checks for contaminant gases shall be carried out at 30-minute intervals while persons are in the cargo space.

(vii) Entry into the cargo space shall be prohibited when gas concentrations exceed the Threshold Limit Values, for phosphine (0.3 ppm) for arsine (0.05 ppm) or where the oxygen level is below 18%.

GASES RELEASES FROM FERROSILICON IMPURITIES WHEN WATER IS ADDED

(i) Arsine

Arsine is a toxic, colourless gas with a garlic like odour.

(ii) Phosphine

Phosphine is colourless, flammable and highly toxic and has the odour of rotting fish.

Toxicity

Phosphine acts on the central nervous system and the blood.

Symptoms

The symptoms exhibited by phosphine poisoning are an oppressed feeling in the chest, headache, vertigo, general debility, loss of appetite and great thirst. Concentrations of 2000 ppm for a few minutes and 400 to 600 ppm are dangerous to life. 0.3 ppm is the maximum concentration tolerable for several hours without symptoms.

No long term exposures to this gas *shall* be permitted.

FERROUS METAL BORINGS, SHAVINGS, TURNINGS or CUTTINGS UN 2793
in a form liable to self-heating

DESCRIPTION
Metal drillings usually wet or contaminated with such materials as unsaturated cutting oil, oily rags and other combustible material.
This schedule should **not** apply to consignments of materials which are accompanied by a declaration submitted prior to loading by the shipper and stating that they have no self-heating properties when transported in bulk.

CHARACTERISTICS

ANGLE OF REPOSE	BULK DENSITY (kg/m^3)	STOWAGE FACTOR (m^3/t)
Not applicable	Various	Various
SIZE	**CLASS**	**GROUP**
Not applicable	4.2	B

HAZARD
These materials are liable to self-heat and ignite spontaneously, particularly when in a finely divided form, wet or contaminated with such materials, as unsaturated cutting oil, oily rags and other combustible matter.
Excessive amounts of cast iron borings or organic materials may encourage heating. Self-heating or inadequate ventilation may cause dangerous depletion of oxygen in cargo spaces.

STOWAGE & SEGREGATION
"Separated from" foodstuffs.

HOLD CLEANLINESS
Clean and dry as relevant to the hazards of the cargo.

WEATHER PRECAUTIONS
This cargo shall be kept as dry as practicable. This cargo shall not be handled during precipitation. During handling of this cargo all non-working hatches of the cargo spaces into which this cargo is loaded or to be loaded shall be closed.

LOADING
During loading the material shall be compacted in the cargo space as frequently as practicable with a bulldozer or other means. The bilge of each cargo space in which the cargo is loaded shall be kept as dry as practicable. After loading the cargo shall be trimmed to eliminate peaks and compacted. Wooden wet battens and dunnage shall be removed from the cargo space before the cargo is loaded.

PRECAUTIONS
The temperature of this cargo shall be measured prior to and during loading. The temperature of the cargo in the stockyard shall be measured at points between 200 mm and 350 mm from the surface of the cargo pile. This cargo shall only be accepted for loading when the temperature of the cargo prior to loading does not exceed 55°C. If the temperature of the cargo in any cargo

space exceeds 90°C during loading, loading shall be suspended and shall not be recommenced until the temperature of the cargo in all cargo spaces has fallen below 85°C. The ship shall not depart unless the temperature of the cargo in all cargo spaces is below 65°C and has shown a steady or downward trend in temperature for at least eight hours.

VENTILATION
The cargo spaces carrying this cargo shall not be ventilated during voyage.

CARRIAGE
The surface temperature of the cargo shall be monitored and recorded daily during the voyage. Temperature readings shall be taken in such a way as not to require entry into the cargo space or, alternatively if entry is required for this purpose, at least two sets of self-contained breathing apparatus, additional to those required by SOLAS regulation II-2/10.10 should be provided.

DISCHARGE
Entry into the cargo spaces containing this cargo shall only be permitted for trained personnel wearing self-contained breathing apparatus when the main hatches are open and after adequate ventilation is conducted or for personnel using appropriate breathing apparatus.

CLEAN UP
Prior to washing out the residues of this cargo, any oil spillages shall be cleaned from the tank tops and the bilge wells of the cargo spaces for this cargo.

EMERGENCY PROCEDURES

SPECIAL EMERGENCY EQUIPMENT TO BE CARRIED Self-contained breathing apparatus
EMERGENCY PROCEDURES Nil **EMERGENCY ACTION IN THE EVENT OF FIRE** Whilst at sea, any rise in surface temperature of the material indicates a self-heating reaction problem. If the temperature should rise to 80°C a potential fire situation is developing and the ship should make for the nearest suitable port. Batten down. **Water should not be used at sea.** Early application of an inert gas to a smouldering situation may be effective. **MEDICAL FIRST AID** Refer to the Medical First Aid Guide (MFAG), as amended.

REMARK
In port, copious quantities of water may be used, but due consideration should be given to factors affecting the stability of the ship.

FERTILIZERS WITHOUT NITRATES
(non-hazardous)

DESCRIPTION
Powder and granular. Greenish, brown or beige in colour. Odourless. Very low moisture content (0% to 1%). Hygroscopic.

CHARACTERISTICS

ANGLE OF REPOSE	BULK DENSITY (kg/m^3)	STOWAGE FACTOR (m^3/t)
Not applicable	714 to 1111	0.90 to 1.40
SIZE	**CLASS**	**GROUP**
1 mm to 3 mm	Not applicable	C

HAZARD
No special hazards.
This cargo is non-combustible or has a low fire-risk.
This cargo is hygroscopic and will cake if wet.

STOWAGE & SEGREGATION
No special requirements.

HOLD CLEANLINESS
No special requirements.

WEATHER PRECAUTIONS
This cargo shall be kept as dry as practicable. This cargo shall not be handled during precipitation. During handling of this cargo all non-working hatches of the cargo spaces into which this cargo is loaded or to be loaded shall be closed.

LOADING
Trim in accordance with the relevant provisions required under sections 4 and 5 of the Code.

PRECAUTIONS
No special requirements.

VENTILATION
The cargo spaces carrying this cargo shall not be ventilated during voyage.

CARRIAGE
No special requirements.

DISCHARGE
If this cargo has hardened, it shall be trimmed to avoid the formation of overhangs, as necessary.

CLEAN UP
No special requirements.

FISH (IN BULK)

DESCRIPTION
Fish carried in bulk after freezing.

CHARACTERISTICS

ANGLE OF REPOSE	BULK DENSITY (kg/m^3)	STOWAGE FACTOR (m^3/t)
Not applicable	-	-
SIZE	**CLASS**	**GROUP**
Various	Not applicable	A

HAZARD
Fish carried in bulk may liquefy.
This cargo is non-combustible or has a low fire-risk.

STOWAGE & SEGREGATION
No special requirements.

HOLD CLEANLINESS
No special requirements.

WEATHER PRECAUTIONS
No special requirements

LOADING
Trim in accordance with the relevant provisions required under sections 4 and 5 of the Code.

PRECAUTIONS
Prior to the carriage of this cargo, due consideration shall be paid to consult with the competent authority. The requirement in chapter 7 of this Code, requiring a determination of TML and moisture content declaration may be dispensed with for this cargo.

Bilge wells shall be clean, dry and covered as appropriate, to prevent ingress of the cargo.

VENTILATION
No special requirements.

CARRIAGE
No special requirements.

DISCHARGE
No special requirements.

CLEAN UP
After completion of discharge, attention shall be paid to residues of this cargo, which are liable to decompose resulting in emission of toxic gases and depletion of oxygen.

FISHMEAL (FISHSCRAP), STABILIZED UN 2216
Anti-oxidant treated

*The provisions of this entry should **not** apply to consignments of fishmeal, Group C, which are accompanied by a certificate issued by the competent authority of the country of shipment, stating that the material has no self-heating properties when transported in bulk.*

DESCRIPTION
Brown to greenish-brown material obtained through heating and drying of oily fish. Moisture content: greater than 5% but not exceeding 12%, by mass. Strong odour may affect other cargo. Fat content; not more than 15%, by mass.

CHARACTERISTICS

ANGLE OF REPOSE	BULK DENSITY (kg/m^3)	STOWAGE FACTOR (m^3/t)
Not applicable	300 to 700	1.5 to 3.0
SIZE	**CLASS**	**GROUP**
Not applicable	9	B

HAZARD
Liable to heat spontaneously unless has low fat content or effectively anti-oxidant treated. Liable to cause oxygen depletion in cargo space.

STOWAGE & SEGREGATION
Segregation as required for class 4.2 materials.

HOLD CLEANLINESS
Clean and dry as relevant to the hazards of the cargo.

WEATHER PRECAUTIONS
This cargo shall be kept as dry as practicable. This cargo shall not be handled during precipitation. During handling of this cargo all non-working hatches of the cargo spaces into which this cargo is loaded or to be loaded shall be closed.

LOADING
Trim in accordance with the relevant provisions required under sections 4 and 5 of the Code.

The cargo shall not be accepted for loading when the temperature of the cargo exceeds 35°C or 5°C above the ambient temperature, which ever is higher. The cargo may be loaded without weathering/curing prior to loading.

PRECAUTIONS

1 This cargo shall only be accepted for loading when the stabilization of the cargo is achieved to prevent spontaneous combustion by effective application:

.1 of between 400 and 1000 mg/kg (ppm) ethoxyquin, or

.2 of between 1000 and 4000 mg/kg (ppm) butylated hydroxytolune

at the time of production, within 12 months prior to shipment and anti-oxidant remnant concentration shall be not less than 100 mg/kg (ppm) at the time of shipment.

2 The shipper shall provide the master with a certificate issued by a person recognized by the competent authority of the country of shipment specifying:

- moisture content;
- fat content;
- details of anti-oxidant treatment for meals older than six months;
- anti-oxidant concentrations at the time of shipment, which must exceed 100 mg/kg (ppm);
- total weight of the consignment;
- temperature of fishmeal at the time of dispatch from the factory; and
- date of production.

A suitable equipment for quantitative measurement of the concentration of oxygen in the cargo space shall be provided on board the ship.

VENTILATION

Surface ventilation either natural or mechanical shall be conducted during the voyage, as necessary, for the cargo spaces carrying this cargo. If the temperature of the cargo exceeds 55°C and continues to increase, ventilation to the cargo space shall be stopped. If self-heating continues, then carbon dioxide or inert gas shall be introduced to the cargo spaces.

CARRIAGE

This cargo shall be kept as cool and dry as reasonably practicable. The temperature of this cargo shall be measured at eight-hour intervals during the voyage. The results of measurements shall be recorded and kept on board.

DISCHARGE

No special requirements.

CLEAN UP

No special requirements.

EMERGENCY PROCEDURES

SPECIAL EMERGENCY EQUIPMENT TO BE CARRIED Self-contained breathing apparatus.
EMERGENCY PROCEDURES Wear self-contained breathing apparatus. **EMERGENCY ACTION IN THE EVENT OF FIRE** Batten down; use ship's fixed fire-fighting installation, if fitted. **MEDICAL FIRST AID** Refer to the Medical First Aid Guide (MFAG), as amended.

FLUORSPAR

DESCRIPTION
Yellow, green or purple crystals. Coarse dust.

CHARACTERISTICS

ANGLE OF REPOSE	BULK DENSITY (kg/m^3)	STOWAGE FACTOR (m^3/t)
Not applicable	Dry: 1429 to 1786 Wet: 1786 to 2128	Dry: 0.56 to 0.70 Wet: 0.47 to 0.56
SIZE	**CLASS**	**GROUP**
Not applicable	MHB	A and B

HAZARD
This material may liquefy if shipped at moisture content in excess of their Transportable moisture limit. See section 7 of the Code. Harmful and irritating by dust inhalation.

STOWAGE & SEGREGATION
"Separated from" foodstuffs and all class 8 materials (goods in packaged form and solid bulk materials).

HOLD CLEANLINESS
No special requirements.

WEATHER PRECAUTIONS
When a cargo is carried in a ship other than specially constructed or fitted cargo ship complying with the requirements in subsection 7.3.2 of this Code, the following provisions shall be complied with:

.1 the moisture content of the cargo shall be kept less than its TML during voyage;
.2 unless expressly provided otherwise in this individual schedule, the cargo shall not be handled during precipitation;
.3 unless expressly provided otherwise in this individual schedule, during handling of the cargo, all non-working hatches of the cargo spaces into which the cargo is loaded or to be loaded shall be closed;
.4 the cargo may be handled during precipitation provided that the actual moisture content of the cargo is sufficiently less than its TML so that the actual moisture content is not liable to be increased beyond the TML by the precipitation; and
.5 the cargo in a cargo space may be discharged during precipitation provided that the total amount of the cargo in the cargo space is to be discharged in the port.

LOADING
Trim in accordance with the relevant provisions required under sections 4 and 5 of the Code.

PRECAUTIONS
Appropriate precautions shall be taken to protect machinery and accommodation spaces from the dust of the cargo. Bilge wells of the cargo spaces shall be protected from ingress of the cargo. Due consideration shall be paid to protect equipment from the dust of the cargo. Persons, who

may be exposed to the dust of the cargo, shall wear goggles or other equivalent dust eye-protection and dust filter masks. Those persons shall wear protective clothing, as necessary. Protect machinery, accommodation and bilge wells from dust.

VENTILATION
No special requirements.

CARRIAGE
No special requirements.

DISCHARGE
No special requirements.

CLEAN UP
No special requirements.

EMERGENCY PROCEDURES

SPECIAL EMERGENCY EQUIPMENT TO BE CARRIED Nil
EMERGENCY PROCEDURES Nil **EMERGENCY ACTION IN THE EVENT OF FIRE** Nil **MEDICAL FIRST AID** Refer to the Medical First Aid Guide (MFAG), as amended.

FLY ASH

DESCRIPTION
Fly Ash is the light, finely divided dusty fine powder residue from coal and oil fired power stations. Do not confuse with Calcined Pyrites.

CHARACTERISTICS

ANGLE OF REPOSE	BULK DENSITY (kg/m^3)	STOWAGE FACTOR (m^3/t)
Not applicable	794	1.26
SIZE	**CLASS**	**GROUP**
Not applicable	Not applicable	C

HAZARD
May shift when aerated.
This cargo is non-combustible or has a low fire-risk.

STOWAGE & SEGREGATION
"Separated from" foodstuffs.

HOLD CLEANLINESS
Clean and dry as relevant to the hazards of the cargo.

WEATHER PRECAUTIONS
This cargo shall be kept as dry as practicable. This cargo shall not be handled during precipitation. During handling of this cargo all non-working hatches of the cargo spaces into which this cargo is loaded or to be loaded shall be closed.

LOADING
Trim in accordance with the relevant provisions required under sections 4 and 5 of the Code.
The ship carrying this cargo shall not depart until the cargo has settled.

PRECAUTIONS
Bilge wells shall be clean, dry and covered as appropriate, to prevent ingress of the cargo. Appropriate precautions shall be taken to protect machinery and accommodation spaces from the dust of the cargo. Bilge wells of the cargo spaces shall be protected from ingress of the cargo. Due consideration shall be paid to protect equipment from the dust of the cargo. Persons, who may be exposed to the dust of the cargo, shall wear protective clothing, goggles or other equivalent dust eye-protection and dust filter masks, as necessary

VENTILATION
No special requirements.

CARRIAGE
After the completion of loading of this cargo, the hatches of the cargo spaces shall be sealed. All vents and access ways to the cargo spaces shall be shut during the voyage. Bilges in the cargo spaces carrying this cargo shall not be pumped unless absolutely necessary.

DISCHARGE
No special requirements.

CLEAN UP
In the case that the residues of this cargo are to be washed out, the cargo spaces and the other structures and equipment which may have been in contact with this cargo or its dust shall be thoroughly swept prior to washing out. Particular attention shall be paid to bilge wells and framework in the cargo spaces. After complying with the foregoing requirements, the cargo spaces shall be washed out and the water for washing out shall be pumped out in an appropriate manner, except in the case that the BCSN of the cargo to be loaded subsequent to discharge is FLY ASH.

GRANULATED SLAG

DESCRIPTION
Residue from steelworks blast furnaces with a dirty grey, lumpy appearance. Iron: 0.5%.

CHARACTERISTICS

ANGLE OF REPOSE	BULK DENSITY (kg/m^3)	STOWAGE FACTOR (m^3/t)
Not applicable	1111	0.90
SIZE	**CLASS**	**GROUP**
Up to 5 mm	Not applicable	C

HAZARD
No special hazards. Slag dust is fine and has abrasive characteristics.
This cargo is non-combustible or has a low fire-risk.

STOWAGE & SEGREGATION
No special requirements.

HOLD CLEANLINESS
No special requirements.

WEATHER PRECAUTIONS
No special requirements.

LOADING
Trim in accordance with the relevant provisions required under sections 4 and 5 of the Code.

This cargo shall not be accepted for loading when the temperature of the cargo exceeds 50°C.

PRECAUTIONS
Appropriate precautions shall be taken to protect machinery and accommodation spaces from the dust of the cargo. Bilge wells of the cargo spaces shall be protected from ingress of the cargo. Due consideration shall be paid to protect equipment from the dust of the cargo. Persons, who may be exposed to the dust of the cargo, shall wear protective clothing, goggles or other equivalent dust eye-protection and dust filter masks, as necessary.

VENTILATION
No special requirements.

CARRIAGE
No special requirements.

DISCHARGE
No special requirements.

CLEAN UP
No special requirements.

GRANULATE TYRE RUBBER

DESCRIPTION
Fragmented rubber tyre material cleaned and free from other materials

CHARACTERISTICS

ANGLE OF REPOSE	BULK DENSITY (kg/m^3)	STOWAGE FACTOR (m^3/t)
Not applicable	555	1.8
SIZE	**CLASS**	**GROUP**
Granular, up to 10 mm	Not applicable	C

HAZARD
No special hazards.
This cargo is non-combustible or has a low fire-risk.

STOWAGE & SEGREGATION
No special requirements.

HOLD CLEANLINESS
No special requirements.

WEATHER PRECAUTIONS
No special requirements.

LOADING
Trim in accordance with the relevant provisions required under sections 4 and 5 of the Code.

PRECAUTIONS
During handling and carriage no hotwork, burning and smoking shall be permitted in the vicinity of the cargo spaces containing this cargo. Prior to shipment, a certificate shall be given to the master by the shipper stating that this cargo this cargo consists of clean rubber material only. When the planned interval between the commencement of loading and the completion of discharge of this cargo exceeds 5 days, the cargo shall not be accepted for loading unless the cargo is to be carried in cargo spaces fitted with a fixed gas fire extinguishing system. The administration may, if it considers that the planned voyage does not exceed 5 days from the commencement of loading to the completion of discharge, exempt from the requirements of a fitted fixed gas fire-extinguishing system in the cargo spaces for the carriage of this cargo.

VENTILATION
No special requirements.

CARRIAGE
No special requirements.

DISCHARGE
No special requirements.

CLEAN UP
No special requirements.

GYPSUM

DESCRIPTION
A natural Hydrated Calcium Sulphate. Insoluble in water. It is loaded as a fine powder that aggregates into lumps. Gypsum is not water soluble. Average moisture content is 1% to 2%.

CHARACTERISTICS

ANGLE OF REPOSE	BULK DENSITY (kg/m^3)	STOWAGE FACTOR (m^3/t)
Not applicable	1282 to 1493	0.67 to 0.78
SIZE	**CLASS**	**GROUP**
Up to 100 mm	Not applicable	C

HAZARD
No special hazards.
This cargo is non-combustible or has a low fire-risk.

STOWAGE & SEGREGATION
No special requirements.

HOLD CLEANLINESS
No special requirements.

WEATHER PRECAUTIONS
This cargo shall be kept as dry as practicable. This cargo shall not be handled during precipitation. During handling of this cargo all non-working hatches of the cargo spaces into which this cargo is loaded or to be loaded shall be closed.

LOADING
Trim in accordance with the relevant provisions required under sections 4 and 5 of the Code.

PRECAUTIONS
No special requirements.

VENTILATION
No special requirements.

CARRIAGE
No special requirements.

DISCHARGE
No special requirements.

CLEAN UP
Prior to washing out the residues of this cargo, the decks and the cargo spaces shall be shovelled and swept clean, because washing out of this cargo is difficult.

ILMENITE CLAY

DESCRIPTION
Very heavy black clay. Abrasive. May be dusty. Titanium, silicate and iron oxides are obtained from ilmenite clay. Moisture contnt: 10% to 20% .

CHARACTERISTICS

ANGLE OF REPOSE	BULK DENSITY (kg/m^3)	STOWAGE FACTOR (m^3/t)
Not applicable	2000 to 2500	0.4 to 0.5
SIZE	**CLASS**	**GROUP**
Up to 0.15 mm	Not applicable	A

HAZARD
The material may liquefy if shipped at a moisture content in excess of its Transportable Moisture Limit (TML).
This cargo is non-combustible or has a low fire-risk.

STOWAGE & SEGREGATION
No special requirements.

HOLD CLEANLINESS
No special requirements.

WEATHER PRECAUTIONS
When a cargo is carried in a ship other than specially constructed or fitted cargo ship complying with the requirements in subsection 7.3.2 of this Code, the following provisions shall be complied with:

.1 the moisture content of the cargo shall be kept less than its TML during voyage;
.2 unless expressly provided otherwise in this individual schedule, the cargo shall not be handled during precipitation;
.3 unless expressly provided otherwise in this individual schedule, during handling of the cargo, all non-working hatches of the cargo spaces into which the cargo is loaded or to be loaded shall be closed;
.4 the cargo may be handled during precipitation provided that the actual moisture content of the cargo is sufficiently less than its TML so that the actual moisture content is not liable to be increased beyond the TML by the precipitation; and
.5 the cargo in a cargo space may be discharged during precipitation provided that the total amount of the cargo in the cargo space is to be discharged in the port.

LOADING
Trim in accordance with the relevant provisions required under sections 4 and 5 of the Code.

As the density of the cargo is extremely high, the tanktop may be overstressed unless the cargo is evenly spread across the tanktop to equalize the weight distribution. Due consideration shall be paid to ensure that tanktop is not overstressed during voyage and during loading by a pile of the cargo.

PRECAUTIONS
Bilge wells shall be clean, dry and covered as appropriate, to prevent ingress of the cargo.

VENTILATION
No special requirements.

CARRIAGE
The appearance of the surface of this cargo shall be checked regularly during voyage. If free water above the cargo or fluid state of the cargo is observed during voyage, the master shall take appropriate actions to prevent cargo shifting and potential capsize of the ship, and give consideration to seeking emergency entry into a place of refuge.

DISCHARGE
No special requirements.

CLEAN UP
No special requirements.

ILMENITE SAND
This cargo can be categorized as Group A or C.

DESCRIPTION
Very heavy black sand. Abrasive. May be dusty. Titanium, monazite and zinc ore are obtained from ilmenite sand. The moisture content of this cargo in Group C is 1% to 2%. When moisture content is above 2%, this cargo is to be categorized in Group A

CHARACTERISTICS

ANGLE OF REPOSE	BULK DENSITY (kg/m^3)	STOWAGE FACTOR (m^3/t)
Not applicable	2380 to 3225	0.31 to 0.42
SIZE	**CLASS**	**GROUP**
Up to 0.15 mm	Not applicable	A or C

HAZARD
This cargo in Group C has no special hazards. This cargo in Group A may liquefy if shipped at a moisture content in excess of its TML. See section 7 of this Code.
This cargo is non-combustible or has a low fire-risk.

STOWAGE & SEGREGATION
No special requirements.

HOLD CLEANLINESS
No special requirements.

WEATHER PRECAUTIONS
This cargo shall be kept as dry as practicable before loading, during loading and during voyage. This cargo shall not be loaded during precipitation. During loading of this cargo all non-working hatches of the cargo spaces to which this cargo are loaded or to be loaded shall be closed.

LOADING
Trim in accordance with the relevant provisions required under sections 4 and 5 of the Code.

As the density of the cargo is extremely high, the tanktop may be overstressed unless the cargo is evenly spread across the tanktop to equalize the weight distribution. Due consideration shall be paid to ensure that tanktop is not overstressed during voyage and during loading by a pile of the cargo.

PRECAUTIONS
Bilge wells shall be clean, dry and covered as appropriate, to prevent ingress of the cargo.

VENTILATION
No special requirements.

CARRIAGE
The appearance of the surface of this cargo shall be checked regularly during voyage. If free water above the cargo or fluid state of the cargo is observed during voyage, the master shall take appropriate actions to prevent cargo shifting and potential capsize of the ship, and give consideration to seeking emergency entry into a place of refuge.

DISCHARGE
No special requirements.

CLEAN UP
No special requirements.

IRON ORE

DESCRIPTION
Iron ore varies in colour from dark grey to rusty redvaries in iron content from haematite, (high grade ore) to ironstone of the lower commercial ranges. Moisture content: 0% to 16%. Mineral Concentrates are different cargoes (see IRON CONCENTRATE).

CHARACTERISTICS

ANGLE OF REPOSE	BULK DENSITY (kg/m^3)	STOWAGE FACTOR (m^3/t)
Not applicable	1250 to 3448	0.29 to 0.80
SIZE	**CLASS**	**GROUP**
Up to 250 mm	Not applicable	C

HAZARD
No special hazards.
This cargo is non-combustible or has a low fire-risk.
Iron ore cargoes may affect magnetic compasses.

STOWAGE & SEGREGATION
No special requirements.

HOLD CLEANLINESS
No special requirements.

WEATHER PRECAUTIONS
No special requirement.

LOADING
Trim in accordance with the relevant provisions required under sections 4 and 5 of the Code.

As the density of the cargo is extremely high, the tanktop may be overstressed unless the cargo is evenly spread across the tanktop to equalize the weight distribution. Due consideration shall be paid to ensure that tanktop is not overstressed during voyage and during loading by a pile of the cargo.

PRECAUTIONS
Loading rates of this cargo are normally very high. Due consideration shall be paid on the ballasting operation to develop the loading plan required by regulation VI/9.3 in SOLAS Convention.

VENTILATION
No special requirements.

CARRIAGE
No special requirements.

DISCHARGE
No special requirements.

CLEAN UP
No special requirements.

IRON ORE PELLETS

DESCRIPTION
Pellets are approximately spherical lumps formed by crushing iron ore into a powder. This iron oxide is formed into pellets by using clay as a binder and then hardening by firing in kilns at 1315°C. Moisture content: 0% to 2%.

CHARACTERISTICS

ANGLE OF REPOSE	BULK DENSITY (kg/m^3)	STOWAGE FACTOR (m^3/t)
Not applicable	1900 to 2400	0.45 to 0.52
SIZE	**CLASS**	**GROUP**
Up to 20 mm	Not applicable	C

HAZARD
No special hazards.
This cargo is non-combustible or has a low fire-risk.

STOWAGE & SEGREGATION
No special requirements.

HOLD CLEANLINESS
No special requirements.

WEATHER PRECAUTIONS
No special requirements.

LOADING
Trim in accordance with the relevant provisions required under sections 4 and 5 of the Code.

As the density of the cargo is extremely high, the tanktop may be overstressed unless the cargo is evenly spread across the tanktop to equalize the weight distribution. Due consideration shall be paid to ensure that tanktop is not overstressed during voyage and during loading by a pile of the cargo.

PRECAUTIONS
No special requirements.
Bilge wells shall be clean, dry and covered as appropriate, to prevent ingress of the cargo.

VENTILATION
No special requirements.

CARRIAGE
No special requirements.

DISCHARGE
No special requirements.

CLEAN UP
No special requirements.

IRON OXIDE, SPENT or
IRON SPONGE, SPENT UN 1376
obtained from coal gas purification

DESCRIPTION
Powdery material, black, brown, red or yellow. Strong odour may taint other cargo.

CHARACTERISTICS

ANGLE OF REPOSE	BULK DENSITY (kg/m^3)	STOWAGE FACTOR (m^3/t)
Not applicable	2222	0.45
SIZE	**CLASS**	**GROUP**
Up to 20 mm	4.2	B

HAZARD
Liable to heat and ignite spontaneously, especially if contaminated with oil or moisture. Toxic gases: hydrogen sulphide, sulphur dioxide, and hydrogen cyanide may be produced. Dust may cause an explosion hazard. Liable to reduce the oxygen in the cargo space.

STOWAGE & SEGREGATION
"Separated from" foodstuffs.

HOLD CLEANLINESS
Clean and dry as relevant to the hazards of the cargo.

WEATHER PRECAUTIONS
This cargo shall be kept as dry as practicable. This cargo shall not be handled during precipitation. During handling of this cargo all non-working hatches of the cargo spaces into which this cargo is loaded or to be loaded shall be closed.

LOADING
Trim in accordance with the relevant provisions required under sections 4 and 5 of the Code.

As the density of the cargo is extremely high, the tanktop may be overstressed unless the cargo is evenly spread across the tanktop to equalize the weight distribution. Due consideration shall be paid to ensure that tanktop is not overstressed during voyage and during loading by a pile of the cargo.

PRECAUTIONS
Prior to loading, the shipper or the manufacturer shall provide the master with a certificate stating that the cargo has been cooled and then weathered for not less than 8 weeks prior to shipment.

VENTILATION
Surface ventilation only, either natural or mechanical, shall be conducted, as necessary, during the voyage for this cargo.

CARRIAGE
For quantitative measurements of oxygen and hydrogen cyanide, suitable detectors for each gas or combination of gases shall be on board while this cargo is carried. The detectors shall be suitable for use in an atmosphere without oxygen and of certified safe type for use in explosive atmosphere. The concentrations of these gases in the cargo spaces carrying this cargo shall be measured regularly, during voyage, and the results of the measurements shall be recorded and kept on board.

DISCHARGE
No special requirements.

CLEAN UP
No special requirements.

EMERGENCY PROCEDURES

SPECIAL EMERGENCY EQUIPMENT TO BE CARRIED Protective clothing (gloves, boots, coveralls, headgear). Self-contained breathing apparatus. Spray nozzles.
EMERGENCY PROCEDURES Wear protective clothing and self-contained breathing apparatus. **EMERGENCY ACTION IN THE EVENT OF FIRE** Batten down; use ship's fixed fire-fighting installation if available. Exclusion of air may be sufficient to control fire. **MEDICAL FIRST AID** Refer to the Medical First Aid Guide (MFAG), as amended.

IRONSTONE

DESCRIPTION
Ore. Moisture: 1% to 2%

CHARACTERISTICS

ANGLE OF REPOSE	BULK DENSITY (kg/m^3)	STOWAGE FACTOR (m^3/t)
Not applicable	2564	0.39
SIZE	**CLASS**	**GROUP**
75 mm	Not applicable	C

HAZARD
No special hazards.
This cargo is non-combustible or has a low fire-risk.

STOWAGE & SEGREGATION
No special requirements.

HOLD CLEANLINESS
No special requirements.

WEATHER PRECAUTIONS
No special requirements.

LOADING
The cargo shall be trimmed in accordance with the cargo information required by section 4 of this Code. If doubt exists, trim reasonably level to the boundaries of the cargo space so as to minimize the risk of shifting and to ensure that adequate stability will be maintained during the voyage.

As the density of the cargo is extremely high, the tanktop may be overstressed unless the cargo is evenly spread across the tanktop to equalize the weight distribution. Due consideration shall be paid to ensure that tanktop is not overstressed during voyage and during loading by a pile of the cargo.

PRECAUTIONS
Appropriate precautions shall be taken to protect machinery and accommodation spaces from the dust of the cargo. Bilge wells of the cargo spaces shall be protected from ingress of the cargo. Due consideration shall be paid to protect equipment from the dust of the cargo. Persons, who may be exposed to the dust of the cargo, shall wear protective clothing, goggles or other equivalent dust eye-protection and dust filter masks, as necessary.

VENTILATION
No special requirements.

CARRIAGE
No special requirements.

DISCHARGE
No special requirements.

CLEAN UP
No special requirements.

LABRADORITE

DESCRIPTION
A lime-soda rock form of felspar. May give off dust.

CHARACTERISTICS

ANGLE OF REPOSE	BULK DENSITY (kg/m^3)	STOWAGE FACTOR (m^3/t)
Not applicable	1667	0.60
SIZE	**CLASS**	**GROUP**
Lumps: 50 mm to 300 mm	Not applicable	C

HAZARD
No special hazards. This cargo is non-combustible or has a low fire-risk.

STOWAGE & SEGREGATION
No special requirements.

HOLD CLEANLINESS
Clean and dry as relevant to the hazards of the cargo.

WEATHER PRECAUTIONS
This cargo shall be kept as dry as practicable before loading, during loading and during voyage. This cargo shall not be loaded during precipitation. During loading of this cargo all non-working hatches of the cargo spaces to which this cargo are loaded or to be loaded shall be closed.

LOADING
Trim in accordance with the relevant provisions required under sections 4 and 5 of the Code.

PRECAUTIONS
Appropriate precautions shall be taken to protect machinery and accommodation spaces from the dust of the cargo. Bilge wells of the cargo spaces shall be protected from ingress of the cargo. Due consideration shall be paid to protect equipment from the dust of the cargo. Persons, who may be exposed to the dust of the cargo, shall wear protective clothing, goggles or other equivalent dust eye-protection and dust filter masks, as necessary.

VENTILATION
No special requirements.

CARRIAGE
No special requirements.

DISCHARGE
No special requirements.

CLEAN UP
No special requirements.

LEAD NITRATE UN 1469

DESCRIPTION
White crystals. Soluble in water. Derived from the action of nitrate acid on lead.

CHARACTERISTICS

ANGLE OF REPOSE	BULK DENSITY (kg/m^3)		STOWAGE FACTOR (m^3/t)
Not applicable	-		-
SIZE	**CLASS**	**SUBSIDIARY RISK**	**GROUP**
Not applicable	5.1	6.1	B

HAZARD
Toxic if swallowed or dust inhaled.
Not combustible by itself, but mixtures with combustible materials, are easily ignited and burn fiercely.

STOWAGE & SEGREGATION
"Separated from" foodstuffs.

HOLD CLEANLINESS
Clean and dry as relevant to the hazards of the cargo.

WEATHER PRECAUTIONS
This cargo shall be kept as dry as practicable before loading, during loading and during voyage. This cargo shall not be loaded during precipitation. During loading of this cargo all non-working hatches of the cargo spaces to which this cargo are loaded or to be loaded shall be closed.

LOADING
Trim in accordance with the relevant provisions required under sections 4 and 5 of the Code.

PRECAUTIONS
Bilge wells shall be clean, dry and covered as appropriate, to prevent ingress of the cargo. Appropriate precautions shall be taken to protect machinery and accommodation spaces from the dust of the cargo. Bilge wells of the cargo spaces shall be protected from ingress of the cargo. Due consideration shall be paid to protect equipment from the dust of the cargo. Persons, who may be exposed to the dust of the cargo, shall wear goggles or other equivalent dust eye-protection and dust filter masks. Those persons shall wear protective clothing, as necessary.

VENTILATION
Natural surface ventilation shall be conducted during the voyage, as necessary, for the cargo spaces carrying this cargo.

CARRIAGE
No special requirements.

DISCHARGE
No special requirements.

CLEAN UP
No special requirements.

EMERGENCY PROCEDURES

SPECIAL EMERGENCY EQUIPMENT TO BE CARRIED Protective clothing (gloves, coveralls, headgear). Self-contained breathing apparatus. Spray nozzles.
EMERGENCY PROCEDURES Wear protective clothing and self-contained breathing apparatus. **EMERGENCY ACTION IN THE EVENT OF FIRE** Use copious quantities of water, which is best applied in the form of a spray to avoid disturbing the surface of the material. The material may fuse or melt, in which condition application of water may result in extensive scattering of the molten materials. Exclusion of air or the use of CO_2 will not control the fire. Due consideration should be given to the effect on the stability of the ship due to accumulated water. **MEDICAL FIRST AID** Refer to the Medical First Aid Guide (MFAG), as amended.

LEAD ORE

DESCRIPTION
Heavy soft grey solid material.

CHARACTERISTICS

ANGLE OF REPOSE	BULK DENSITY (kg/m^3)	STOWAGE FACTOR (m^3/t)
Not applicable	1493 to 4167	0.24 to 0.67
SIZE	**CLASS**	**GROUP**
Powder	Not applicable	C

HAZARD
Toxic, with acids evolves highly toxic vapour.
This cargo is non-combustible or has a low fire-risk.

STOWAGE & SEGREGATION
"Separated from" all class 8 liquids.

HOLD CLEANLINESS
Clean and dry as relevant to the hazards of the cargo.

WEATHER PRECAUTIONS
This cargo shall be kept as dry as practicable before loading, during loading and during voyage. This cargo shall not be loaded during precipitation. During loading of this cargo all non-working hatches of the cargo spaces to which this cargo are loaded or to be loaded shall be closed.

LOADING
Trim in accordance with the relevant provisions required under sections 4 and 5 of the Code.

As the density of the cargo is extremely high, the tanktop may be overstressed unless the cargo is evenly spread across the tanktop to equalize the weight distribution. Due consideration shall be paid to ensure that tanktop is not overstressed during voyage and during loading by a pile of the cargo.

PRECAUTIONS
No special requirements.

VENTILATION
No special requirements.

CARRIAGE
No special requirements.

DISCHARGE
No special requirements.

CLEAN UP
No special requirements.

LIME (UNSLAKED)

DESCRIPTION
White or greyish-white in colour.

CHARACTERISTICS

ANGLE OF REPOSE	BULK DENSITY (kg/m^3)	STOWAGE FACTOR (m^3/t)
Not applicable	-	-
SIZE	**CLASS**	**GROUP**
Lump	MHB	B

HAZARD
Unslaked lime combines with water to form calcium hydroxide (hydrated lime) or magnesium hydroxide. This reaction develops a great deal of heat which may be sufficient to cause ignition of nearby combustible materials. This is not combustible or has a low fire-risk corrosive to eyes and mucous membranes.
This cargo is non-combustible or has a low fire-risk.

STOWAGE & SEGREGATION
"Separated from" all packaged dangerous goods and solid bulk cargoes in Group B.

HOLD CLEANLINESS
Clean and dry as relevant to the hazards of the cargo.

WEATHER PRECAUTIONS
This cargo shall be kept as dry as practicable. This cargo shall not be handled during precipitation. During handling of this cargo all non-working hatches of the cargo spaces into which this cargo is loaded or to be loaded shall be closed.

LOADING
Trim in accordance with the relevant provisions required under sections 4 and 5 of the Code.

PRECAUTIONS
This cargo shall be kept as dry as practicable. Bilge wells shall be clean, dry and covered as appropriate, to prevent ingress of the cargo. Appropriate precautions shall be taken to protect machinery and accommodation spaces from the dust of the cargo. Bilge wells of the cargo spaces shall be protected from ingress of the cargo. Due consideration shall be paid to protect equipment from the dust of the cargo. Persons, who may be exposed to the dust of the cargo, shall wear goggles or other equivalent dust eye-protection and dust filter masks. Those persons shall wear protective clothing, as necessary.

VENTILATION
No special requirements.

CARRIAGE
No special requirements.

DISCHARGE
Do not discharge during precipitation.

CLEAN UP
No special requirements.

EMERGENCY PROCEDURES

SPECIAL EMERGENCY EQUIPMENT TO BE CARRIED Nil
EMERGENCY PROCEDURES Nil **EMERGENCY ACTION IN THE EVENT OF FIRE** Nil (non-combustible). Do not use water, if involved in a fire. **MEDICAL FIRST AID** Refer to the Medical First Aid Guide (MFAG), as amended.

LIMESTONE

DESCRIPTION
Limestone varies in colour from cream through white to medium dark grey (when freshly broken).
Moisture: up to 4%.

CHARACTERISTICS

ANGLE OF REPOSE	BULK DENSITY (kg/m^3)	STOWAGE FACTOR (m^3/t)
Not applicable	1190 to 1493	0.67 to 0.84
SIZE	**CLASS**	**GROUP**
Fines to 90 mm	Not applicable	C

HAZARD
No special hazards.
This cargo is non-combustible or has a low fire-risk.

STOWAGE & SEGREGATION
No special requirements.

HOLD CLEANLINESS
No special requirements.

WEATHER PRECAUTIONS
No special requirements.

LOADING
Trim in accordance with the relevant provisions required under sections 4 and 5 of the Code.

PRECAUTIONS
Bilge wells shall be clean, dry and covered as appropriate, to prevent ingress of the cargo.

VENTILATION
No special requirements.

CARRIAGE
No special requirements.

DISCHARGE
No special requirements.

CLEAN UP
No special requirements.

LINTED COTTON SEED
with not more than 9% moisture and not more than 20.5% oil

DESCRIPTION
Cottonseed with short cotton fibres adhering to the kernel after approximately 90% – 98% of the cotton has been removed by machine.

CHARACTERISTICS

ANGLE OF REPOSE	BULK DENSITY (kg/m^3)	STOWAGE FACTOR (m^3/t)
Not applicable	490	2.02
SIZE	**CLASS**	**GROUP**
-	MHB	B

HAZARD
May self-heat and deplete oxygen in cargo space.

STOWAGE & SEGREGATION
No special requirements.

HOLD CLEANLINESS
Clean and dry as relevant to the hazards of the cargo.

WEATHER PRECAUTIONS
This cargo shall be kept as dry as practicable. This cargo shall not be handled during precipitation. During handling of this cargo all non-working hatches of the cargo spaces into which this cargo is loaded or to be loaded shall be closed.

LOADING
Trim in accordance with the relevant provisions required under sections 4 and 5 of the Code.

PRECAUTIONS
Entry into the cargo space for this cargo shall not be permitted until the cargo space has been ventilated and the atmosphere tested for concentration of oxygen.

VENTILATION
No special requirements.

CARRIAGE
Hatches should be weathertight to prevent the ingress of water.

DISCHARGE
If this cargo has hardened, it shall be trimmed to avoid the formation of overhanging faces, as necessary.

CLEAN UP
No special requirements.

EMERGENCY PROCEDURES

SPECIAL EMERGENCY EQUIPMENT TO BE CARRIED Self-contained breathing apparatus.
EMERGENCY PROCEDURES Wear self-contained breathing apparatus. **EMERGENCY ACTION IN THE EVENT OF FIRE** Batten down; use ship's fixed fire-fighting installation, if fitted. **MEDICAL FIRST AID** Refer to the Medical First Aid Guide (MFAG), as amended.

MAGNESIA (DEADBURNED)

DESCRIPTION
Manufactured in briquette form and is usually white, brown or grey. It is very similar in size, appearance and handling to gravel and is dry and dusty. Deadburned magnesia is natural magnesite calcined at very high temperatures, which results in a non-reactive magnesium oxide, which does not hydrate or produce spontaneous heat.

CHARACTERISTICS

ANGLE OF REPOSE	BULK DENSITY (kg/m^3)	STOWAGE FACTOR (m^3/t)
Not applicable	2000	0.5
SIZE	**CLASS**	**GROUP**
Fines to approx 30 mm	Not applicable	C

HAZARD
No special hazards.
This cargo is non-combustible or has a low fire-risk.

STOWAGE & SEGREGATION
No special requirements.

HOLD CLEANLINESS
No special requirements.

WEATHER PRECAUTIONS
No special requirements.

LOADING
Trim in accordance with the relevant provisions required under sections 4 and 5 of the Code.

PRECAUTIONS
Prior to loading, the shipper or the manufacturer shall provide the master with a declaration stating that the cargo has been sufficiently heat-treated and is ready for loading.

VENTILATION
No special requirements.

CARRIAGE
No special requirements.

DISCHARGE
No special requirements.

CLEAN UP
No special requirements.

MAGNESIA (UNSLAKED)

DESCRIPTION

CHARACTERISTICS

ANGLE OF REPOSE	BULK DENSITY (kg/m^3)	STOWAGE FACTOR (m^3/t)
Not applicable	1250	0.80
SIZE	**CLASS**	**GROUP**
Fines to 90 mm	MHB	B

HAZARD
Combines with water to form magnesium hydroxide with an expansion in volume and a release of heat. May ignite materials with low ignition temperatures. Similar to LIME (UNSLAKED) but is less reactive. Corrosive to eyes and mucous membranes.
This cargo is non-combustible or has a low fire-risk.

STOWAGE & SEGREGATION
"Separated from" all packaged dangerous goods and solid bulk cargoes in Group B.

HOLD CLEANLINESS
Clean and dry as relevant to the hazards of the cargo.

WEATHER PRECAUTIONS
This cargo shall be kept as dry as practicable. This cargo shall not be handled during precipitation. During handling of this cargo all non-working hatches of the cargo spaces into which this cargo is loaded or to be loaded shall be closed.

LOADING
Trim in accordance with the relevant provisions required under sections 4 and 5 of the Code.

PRECAUTIONS
Appropriate precautions shall be taken to protect machinery and accommodation spaces from the dust of the cargo. Bilge wells of the cargo spaces shall be protected from ingress of the cargo. Due consideration shall be paid to protect equipment from the dust of the cargo. Persons, who may be exposed to the dust of the cargo, shall wear goggles or other equivalent dust eye-protection and dust filter masks. Those persons shall wear protective clothing, as necessary.

VENTILATION
No special requirements.

CARRIAGE
No special requirements.

DISCHARGE
Do not discharge during precipitation.

CLEAN UP
No special requirements.

EMERGENCY PROCEDURES

SPECIAL EMERGENCY EQUIPMENT TO BE CARRIED Nil
EMERGENCY PROCEDURES Nil **EMERGENCY ACTION IN THE EVENT OF FIRE** Nil (non-combustible). Do not use water if cargo is involved in a fire. **MEDICAL FIRST AID** Refer to the Medical First Aid Guide (MFAG), as amended.

MAGNESITE, natural

DESCRIPTION
Magnesite is white to yellow in colour.

CHARACTERISTICS

ANGLE OF REPOSE	BULK DENSITY (kg/m^3)	STOWAGE FACTOR (m^3/t)
Not applicable	1429	0.7
SIZE	**CLASS**	**GROUP**
3 mm to 30 mm	Not applicable	C

HAZARD
No special hazards.
This cargo is non-combustible or has a low fire-risk.

STOWAGE & SEGREGATION
No special requirements.

HOLD CLEANLINESS
No special requirements.

WEATHER PRECAUTIONS
No special requirements.

LOADING
Trim in accordance with the relevant provisions required under sections 4 and 5 of the Code.

PRECAUTIONS
No special requirements.

VENTILATION
No special requirements.

CARRIAGE
No special requirements.

DISCHARGE
No special requirements.

CLEAN UP
No special requirements.

MAGNESIUM NITRATE UN 1474

DESCRIPTION
White crystals, soluble in water. Hygroscopic.

CHARACTERISTICS

ANGLE OF REPOSE	BULK DENSITY (kg/m^3)	STOWAGE FACTOR (m^3/t)
Not applicable	-	-
SIZE	**CLASS**	**GROUP**
Not applicable	5.1	B

HAZARD
Although non-combustible by itself, mixtures with combustible material are easily ignited and may burn fiercely.
This cargo is hygroscopic and will cake if wet.

STOWAGE & SEGREGATION
"Separated from" foodstuffs.

HOLD CLEANLINESS
Clean and dry as relevant to the hazards of the cargo.

WEATHER PRECAUTIONS
No special requirements.

LOADING
Trim in accordance with the relevant provisions required under sections 4 and 5 of the Code.

PRECAUTIONS
No special requirements.

VENTILATION
No special requirements.

CARRIAGE
No special requirements.

DISCHARGE
If this cargo has hardened, it shall be trimmed to avoid the formation of overhangs, as necessary.

CLEAN UP
No special requirements.

EMERGENCY PROCEDURES

SPECIAL EMERGENCY EQUIPMENT TO BE CARRIED

Protective clothing (gloves, boots, coveralls, headgear).
Self-contained breathing apparatus.
Spray nozzles.

EMERGENCY PROCEDURES

Wear protective clothing and self-contained breathing apparatus.

EMERGENCY ACTION IN THE EVENT OF FIRE

Use copious quantities of water, which is best applied in the form of a spray to avoid disturbing the surface of the material. The material may fuse or melt, in which condition application of water may result in extensive scattering of the molten materials. Exclusion of air or the use of CO_2 will not control the fire. Due consideration should be given to the effect on the stability of the ship due to the accumulated water.

MEDICAL FIRST AID

Refer to the Medical First Aid Guide (MFAG), as amended.

REMARKS
Material is non-combustible unless contaminated.

MANGANESE ORE

DESCRIPTION
Manganese ore is black to brownish black in colour. It is a very heavy cargo.
Moisture content: up to 15% .

CHARACTERISTICS

ANGLE OF REPOSE	BULK DENSITY (kg/m^3)	STOWAGE FACTOR (m^3/t)
Not applicable	1429 to 3125	fines to 0.32 lumps to 0.70
SIZE	**CLASS**	**GROUP**
Fine dust to 250 mm	Not applicable	C

HAZARD
No special hazards.
This cargo is non-combustible or has a low fire-risk.

STOWAGE & SEGREGATION
No special requirements.

HOLD CLEANLINESS
No special requirements.

WEATHER PRECAUTIONS
No special requirements.

LOADING
Trim in accordance with the relevant provisions required under sections 4 and 5 of the Code.

As the density of the cargo is extremely high, the tanktop may be overstressed unless the cargo is evenly spread across the tanktop to equalize the weight distribution. Due consideration shall be paid to ensure that tanktop is not overstressed during voyage and during loading by a pile of the cargo.

PRECAUTIONS
Appropriate precautions shall be taken to protect machinery and accommodation spaces from the dust of the cargo. Bilge wells of the cargo spaces shall be protected from ingress of the cargo. Due consideration shall be paid to protect equipment from the dust of the cargo. Persons, who may be exposed to the dust of the cargo, shall wear protective clothing, goggles or other equivalent dust eye-protection and dust filter masks, as necessary.

VENTILATION
No special requirements.

CARRIAGE
No special requirements.

DISCHARGE
No special requirements.

CLEAN UP
No special requirements.

MARBLE CHIPS

DESCRIPTION
Dry, dusty, white to grey lumps, particles and powder mixed with a small amount of gravel and pebbles.

CHARACTERISTICS

ANGLE OF REPOSE	BULK DENSITY (kg/m^3)	STOWAGE FACTOR (m^3/t)
Not applicable	654	1.53
SIZE	**CLASS**	**GROUP**
Not applicable	Not applicable	C

HAZARD
No special hazards.
This cargo is non-combustible or has a low fire-risk.

STOWAGE & SEGREGATION
No special requirements.

HOLD CLEANLINESS
No special requirements.

WEATHER PRECAUTIONS
No special requirements.

LOADING
Trim in accordance with the relevant provisions required under sections 4 and 5 of the Code.

PRECAUTIONS
Appropriate precautions shall be taken to protect machinery and accommodation spaces from the dust of the cargo. Bilge wells of the cargo spaces shall be protected from ingress of the cargo. Due consideration shall be paid to protect equipment from the dust of the cargo. Persons, who may be exposed to the dust of the cargo, shall wear protective clothing, goggles or other equivalent dust eye-protection and dust filter masks, as necessary.

VENTILATION
No special requirements.

CARRIAGE
No special requirements.

DISCHARGE
No special requirements.

CLEAN UP
No special requirements.

METAL SULPHIDE CONCENTRATES
(See also Mineral Concentrates schedule)

DESCRIPTION
Mineral concentrates are refined ores in which the valuable components have been enriched by eliminating the bulk of waste materials. Generally the particle size is small although agglomerates sometimes exist in concentrates which have not been freshly produced.
The most common concentrates in this category are: zinc concentrates, lead concentrates, copper concentrates and low grade middling concentrates.

CHARACTERISTICS

ANGLE OF REPOSE	BULK DENSITY (kg/m^3)	STOWAGE FACTOR (m^3/t)
Not applicable	1790 to 3230	0.31 to 0.56
SIZE	**CLASS**	**GROUP**
Various	MHB	A and B

HAZARD
Some sulphide concentrates are liable to oxidation and may have a tendency to self-heat, with associated oxygen depletion and emission of toxic fumes. Some materials may present corrosion problems.
When a Metal Sulphide Concentrate is considered as presenting a low fire-risk, the carriage of such cargo on a ship not fitted with a fixed gas fire extinguishing system should be subject to the Administration's authorization as provided by SOLAS regulation II-2/10.7.1.4.

STOWAGE & SEGREGATION
Unless determined by the competent authority, segregation as required for class 4.2 materials.
"Separated from" foodstuffs and all class 8 acids.

HOLD CLEANLINESS
Clean and dry as relevant to the hazards of the cargo.

WEATHER PRECAUTIONS
When a cargo is carried in a ship other than specially constructed or fitted cargo ship complying with the requirements in subsection 7.3.2 of this Code, the following provisions shall be complied with:

.1 the moisture content of the cargo shall be kept less than its TML during voyage;
.2 unless expressly provided otherwise in this individual schedule, the cargo shall not be handled during precipitation;
.3 unless expressly provided otherwise in this individual schedule, during handling of the cargo, all non-working hatches of the cargo spaces into which the cargo is loaded or to be loaded shall be closed;
.4 the cargo may be handled during precipitation provided that the actual moisture content of the cargo is sufficiently less than its TML so that the actual moisture content is not liable to be increased beyond the TML by the precipitation; and
.5 the cargo in a cargo space may be discharged during precipitation provided that the total amount of the cargo in the cargo space is to be discharged in the port.

LOADING
This cargo shall be trimmed to ensure that the height difference between peaks and troughs does not exceed 5% of the ship's breadth and that the cargo slopes uniformly from the hatch boundaries to the bulkheads and no shearing faces remain to collapse during voyage, in particular on smaller ships, i.e., 100 m long or less.

As the density of the cargo is extremely high, the tanktop may be overstressed unless the cargo is evenly spread across the tanktop to equalize the weight distribution. Due consideration shall be paid to ensure that the tanktop is not overstressed during the voyage and during loading by a pile of the cargo.

PRECAUTIONS
Entry into the cargo space for this cargo shall not be permitted until the cargo space has been ventilated and the atmosphere tested for concentration of oxygen. Appropriate precautions shall be taken to protect machinery and accommodation spaces from the dust of the cargo. Bilge wells of the cargo spaces shall be protected from ingress of the cargo. Due consideration shall be paid to protect equipment from the dust of the cargo. Persons, who may be exposed to the dust of the cargo, shall wear goggles or other equivalent dust eye-protection and dust filter masks. Those persons shall wear protective clothing, as necessary.

VENTILATION
The cargo spaces carrying this cargo shall not be ventilated during voyage.

CARRIAGE
The appearance of the surface of this cargo shall be checked regularly during voyage. If free water above the cargo or fluid state of the cargo is observed during voyage, the master shall take appropriate actions to prevent cargo shifting and potential capsize of the ship, and give consideration to seeking emergency entry into a place of refuge. For quantitative measurements of oxygen and toxic fumes liable to be evolved by the cargo, suitable detectors for each gas and fume or combination of these shall be on board while this cargo is carried. The detectors shall be suitable for use in an atmosphere without oxygen. The concentrations of these gases in the cargo spaces carrying this cargo shall be measured regularly, during voyage, and the results of the measurements shall be recorded and kept on board.

DISCHARGE
No special requirements.

CLEAN UP
No special requirements.

EMERGENCY PROCEDURES

SPECIAL EMERGENCY EQUIPMENT TO BE CARRIED Self-contained breathing apparatus.
EMERGENCY PROCEDURES Wear self-contained breathing apparatus. **EMERGENCY ACTION IN THE EVENT OF FIRE** Batten down; use ship's fixed fire-fighting installation. Exclusion of air may be sufficient to control the fire. **Do not use water.** **MEDICAL FIRST AID** Refer to the Medical First Aid Guide (MFAG), as amended.

REMARKS
Fire may be indicated by the smell of sulphur dioxide.

Mineral Concentrates

(See Bulk Cargo Shipping Names below)

CEMENT COPPER
COPPER CONCENTRATE
IRON CONCENTRATE
IRON CONCENTRATE (pellet feed, sinter feed)
IRON CONCENTRATE (sinter feed)
LEAD AND ZINC CALCINES (mixed)
LEAD AND ZINC MIDDLINGS
LEAD CONCENTRATE
LEAD ORE RESIDUE
LEAD SILVER CONCENTRATE
MANGANESE CONCENTRATE
NEFELENE SYENITE (mineral)
NICKEL CONCENTRATE
PENTAHYDRATE CRUDE
PYRITES
PYRITIC ASHES (iron)
PYRITIC CINDERS
SILVER LEAD CONCENTRATE
SLIG (iron ore)
ZINC AND LEAD CALCINES (mixed)
ZINC AND LEAD MIDDLINGS
ZINC CONCENTRATE
ZINC SINTER
ZINC SLUDGE

All known Bulk Cargo Shipping Names (BCSN) of mineral concentrates are listed above but the list is not exhaustive. See also the entries for Metal Sulphide Concentrates.

DESCRIPTION
Mineral concentrates are refined ores in which valuable components have been enriched by eliminating the bulk of waste materials.

CHARACTERISTICS

ANGLE OF REPOSE	BULK DENSITY (kg/m^3)	STOWAGE FACTOR (m^3/t)
Not applicable	1754 to 3030	0.33 to 0.57
SIZE	**CLASS**	**GROUP**
Various	Not applicable	A

HAZARD
The above materials may liquefy if shipped at moisture content in excess of their Transportable moisture limit (TML). See section 7 of the Code. These cargoes are non-combustible or have low fire-risks.
This cargo will decompose burlap or canvas cloth covering bilge wells. Continuous carriage of this cargo may have detrimental structural effects over a long period of time.

STOWAGE & SEGREGATION
No special requirements.

HOLD CLEANLINESS
No special requirements.

WEATHER PRECAUTIONS

When a cargo is carried in a ship other than specially constructed or fitted cargo ship complying with the requirements in subsection 7.3.2 of this Code, the following provisions shall be complied with:

.1 the moisture content of the cargo shall be kept less than its TML during voyage;

.2 unless expressly provided otherwise in this individual schedule, the cargo shall not be handled during precipitation;

.3 unless expressly provided otherwise in this individual schedule, during handling of the cargo, all non-working hatches of the cargo spaces into which the cargo is loaded or to be loaded shall be closed;

.4 the cargo may be handled during precipitation provided that the actual moisture content of the cargo is sufficiently less than its TML so that the actual moisture content is not liable to be increased beyond the TML by the precipitation; and

.5 the cargo in a cargo space may be discharged during precipitation provided that the total amount of the cargo in the cargo space is to be discharged in the port.

LOADING

This cargo shall be trimmed to ensure that the height difference between peaks and troughs does not exceed 5% of the ship's breadth and that the cargo slopes uniformly from the hatch boundaries to the bulkheads and no shearing faces remain to collapse during voyage, in particular on smaller ships, i.e., 100 m long or less.

As the density of the cargo is extremely high, the tanktop may be overstressed unless the cargo is evenly spread across the tanktop to equalize the weight distribution. Due consideration shall be paid to ensure that the tanktop is not overstressed during the voyage and during loading by a pile of the cargo.

PRECAUTIONS

Bilge wells shall be clean, dry and covered as appropriate, to prevent ingress of the cargo. Bilge system of a cargo space to which this cargo is to be loaded shall be tested to ensure it is working.

VENTILATION

The cargo spaces carrying this cargo shall not be ventilated during voyage.

CARRIAGE

The appearance of the surface of this cargo shall be checked regularly during voyage. If free water above the cargo or fluid state of the cargo is observed during voyage, the master shall take appropriate actions to prevent cargo shifting and potential capsize of the ship, and give consideration to seeking emergency entry into a place of refuge.

DISCHARGE

No special requirements.

CLEAN UP

No special requirements.

MONOAMMONIUM PHOSPHATE (M.A.P.)

DESCRIPTION
MAP is odourless and comes in the form of brownish-grey granules. It can be very dusty. Hygroscopic.

CHARACTERISTICS

ANGLE OF REPOSE	BULK DENSITY (kg/m^3)	STOWAGE FACTOR (m^3/t)
35° to 40°	826 to 1000	1.0 to 1.21
SIZE	**CLASS**	**GROUP**
Not applicable	Not applicable	C

HAZARD
Bulk MAP has a pH of 4.5 and in the presence of moisture content can be highly corrosive.
This cargo is non-combustible or has a low fire-risk.
This cargo is hygroscopic and will cake if wet.
This cargo will decompose burlap or canvas cloth covering bilge wells. Continuous carriage of this cargo may have detrimental structural effects over a long period of time.

STOWAGE & SEGREGATION
No special requirements.

HOLD CLEANLINESS
Clean and dry as relevant to the hazards of the cargo.

WEATHER PRECAUTIONS
This cargo shall be kept as dry as practicable. This cargo shall not be handled during precipitation. During handling of this cargo all non-working hatches of the cargo spaces into which this cargo is loaded or to be loaded shall be closed.

LOADING
Trim in accordance with the relevant provisions required under sections 4 and 5 of the Code.

PRECAUTIONS
Protect machinery, accommodation and equipment from dust.
Appropriate precautions shall be taken to protect machinery and accommodation spaces from the dust of the cargo. Bilge wells of the cargo spaces shall be protected from ingress of the cargo. Due consideration shall be paid to protect equipment from the dust of the cargo. Persons, who may be exposed to the dust of the cargo, shall wear goggles or other equivalent dust eye-protection and dust filter masks. Those persons shall wear protective clothing, as necessary.

VENTILATION
The cargo spaces carrying this cargo shall not be ventilated during voyage.

CARRIAGE
Condensation in the cargo spaces carrying this cargo, sweating of this cargo and entering of water from hatch covers to the cargo spaces shall be checked regularly during the voyage. Due attention shall be paid to the sealing of hatches of the cargo spaces.

DISCHARGE
If this cargo has hardened, it shall be trimmed to avoid the formation of overhangs, as necessary.

CLEAN UP
After discharge of this cargo, particular attention shall be paid to bilge wells of the cargo spaces.

PEANUTS (in shell)

DESCRIPTION
An edible, tan coloured nut. Variable moisture content. Extremely dusty.

CHARACTERISTICS

ANGLE OF REPOSE	BULK DENSITY (kg/m^3)	STOWAGE FACTOR (m^3/t)
Not applicable	304	3.29
SIZE	**CLASS**	**GROUP**
Not applicable	Not applicable	C

HAZARD
May heat spontaneously.
This cargo is non-combustible or has a low fire-risk.

STOWAGE & SEGREGATION
"Away from" sources of heat.

HOLD CLEANLINESS
Clean and dry as relevant to the hazards of the cargo.

WEATHER PRECAUTIONS
No special requirements.

LOADING
Trim in accordance with the relevant provisions required under sections 4 and 5 of the Code.

PRECAUTIONS
Appropriate precautions shall be taken to protect machinery and accommodation spaces from the dust of the cargo. Bilge wells of the cargo spaces shall be protected from ingress of the cargo. Due consideration shall be paid to protect equipment from the dust of the cargo. Persons, who may be exposed to the dust of the cargo, shall wear protective clothing, goggles or other equivalent dust eye-protection and dust filter masks, as necessary.

VENTILATION
The cargo spaces carrying this cargo shall not be ventilated during voyage.

CARRIAGE
No special requirements.

DISCHARGE
No special requirements.

CLEAN UP
No special requirements.

PEAT MOSS

DESCRIPTION

Surface mined from mires, bogs, fens, muskeg and swamps. Types include moss peat, sedge peat and grass peat. Physical properties depend on organic matter, water and air content, botanical decomposition and degree of decomposition.

May range from a highly fibrous cohesive mass of plant remains which when squeezed in its natural state exudes clear to slightly coloured water, to a well decomposed, largely amorphous material with little or no separation of liquid from solids when squeezed.

Typically air-dried peat has low density, high compressibility and high water content; in its natural state it can hold 90 percent or more of water by weight of water when saturated.

CHARACTERISTICS

ANGLE OF REPOSE	BULK DENSITY (kg/m^3)	STOWAGE FACTOR (m^3/t)
Not applicable	80 to 500	2 to 12.5
SIZE	**CLASS**	**GROUP**
Fine Powder	MHB	A and B

HAZARD

Oxygen depletion and an increase in carbon dioxide in cargo and adjacent spaces.

Risk of dust explosion when loading. Caution should be exercised when walking or landing heavy machinery on the surface of uncompressed Peat Moss.

Peat Moss having a moisture content of more than 80% by weight should only be carried on specially fitted or constructed ships (see paragraphs 7.2.2 to 7.2.4 of this Code).

Dust may cause eye, nose and respiratory irritation.

STOWAGE & SEGREGATION

No special requirements.

HOLD CLEANLINESS

Clean and dry as relevant to the hazards of the cargo.

WEATHER PRECAUTIONS

Prior to loading, this cargo shall be stockpiled under cover to effect drainage for reduction of moisture content. This cargo shall be kept as dry as practicable. This cargo shall not be handled during precipitation. During handling of this cargo all non-working hatches of the cargo spaces into which this cargo is loaded or to be loaded shall be closed.

LOADING

Trim in accordance with the relevant provisions required under sections 4 and 5 of the Code.

PRECAUTIONS

Bilge wells shall be clean, dry and covered as appropriate, to prevent ingress of the cargo.

Appropriate precautions shall be taken to protect machinery and accommodation spaces from the dust of the cargo. Bilge wells of the cargo spaces shall be protected from ingress of the cargo. Due consideration shall be paid to protect equipment from the dust of the cargo. Persons, who

may be exposed to the dust of the cargo, shall wear goggles or other equivalent dust eye-protection and dust filter masks. Those persons shall wear protective clothing, as necessary. All personnel of the ship carrying this cargo and all personnel involved in handling of this cargo shall be cautioned that washing hands before eating or smoking and prompt treatment of cuts and scrapes are necessary in case of contact with this cargo or its dust. Entry of personnel into cargo spaces shall not be permitted until tests have been carried out and it has been established that the oxygen content has been restored to a normal level.

VENTILATION
Surface ventilation only, either natural or mechanical, shall be conducted, as necessary, during the voyage for this cargo.

CARRIAGE
No special requirements.

DISCHARGE
No special requirements.

CLEAN UP
No special requirements.

EMERGENCY PROCEDURES

SPECIAL EMERGENCY EQUIPMENT TO BE CARRIED Nil
EMERGENCY PROCEDURES Nil **EMERGENCY ACTION IN THE EVENT OF FIRE** Batten down; use ship's fixed fire-fighting installation if fitted. Exclusion of air may be sufficient to control fire. **MEDICAL FIRST AID** Refer to the Medical First Aid Guide (MFAG), as amended.

PEBBLES (sea)

DESCRIPTION
Round pebbles. Rolls very easily.

CHARACTERISTICS

ANGLE OF REPOSE	BULK DENSITY (kg/m^3)	STOWAGE FACTOR (m^3/t)
Not applicable	1695	0.59
SIZE	**CLASS**	**GROUP**
30 mm to 110 mm	Not applicable	C

HAZARD
No special hazards.
This cargo is non-combustible or has a low fire-risk.

STOWAGE & SEGREGATION
No special requirements.

HOLD CLEANLINESS
No special requirements.

WEATHER PRECAUTIONS
No special requirements.

LOADING
Trim in accordance with the relevant provisions required under sections 4 and 5 of the Code.

PRECAUTIONS
This cargo shall be loaded carefully to prevent damage to the tanktop.

VENTILATION
No special requirements.

CARRIAGE
No special requirements.

DISCHARGE
No special requirements.

CLEAN UP
No special requirements.

PELLETS (concentrates)

DESCRIPTION
Concentrate ore which has been pelletized. Moisture up to 6%.

CHARACTERISTICS

ANGLE OF REPOSE	BULK DENSITY (kg/m^3)	STOWAGE FACTOR (m^3/t)
Not applicable	2128	0.47
SIZE	**CLASS**	**GROUP**
10 mm approximately	Not applicable	C

HAZARD
No special hazards.
This cargo is non-combustible or has a low fire-risk.

STOWAGE & SEGREGATION
No special requirements.

HOLD CLEANLINESS
Clean and dry as relevant to the hazards of the cargo.

WEATHER PRECAUTIONS
No special requirements.

LOADING
Trim in accordance with the relevant provisions required under sections 4 and 5 of the Code.

PRECAUTIONS
No special requirements.

VENTILATION
No special requirements.

CARRIAGE
No special requirements.

DISCHARGE
No special requirements.

CLEAN UP
No special requirements.

PERLITE ROCK

DESCRIPTION
Clay-like and dusty. Light grey. Odourless. Moisture: 0.5% to 1%

CHARACTERISTICS

ANGLE OF REPOSE	BULK DENSITY (kg/m^3)	STOWAGE FACTOR (m^3/t)
Not applicable	943 to 1020	0.98 to 1.06
SIZE	**CLASS**	**GROUP**
Not applicable	Not applicable	C

HAZARD
No special hazards.
This cargo is non-combustible or has a low fire-risk.

STOWAGE & SEGREGATION
No special requirements.

HOLD CLEANLINESS
No special requirements.

WEATHER PRECAUTIONS
No special requirements.

LOADING
Trim in accordance with the relevant provisions required under sections 4 and 5 of the Code.

PRECAUTIONS
Appropriate precautions shall be taken to protect machinery and accommodation spaces from the dust of the cargo. Bilge wells of the cargo spaces shall be protected from ingress of the cargo. Due consideration shall be paid to protect equipment from the dust of the cargo. Persons, who may be exposed to the dust of the cargo, shall wear protective clothing, goggles or other equivalent dust eye-protection and dust filter masks, as necessary.

VENTILATION
No special requirements.

CARRIAGE
No special requirements.

DISCHARGE
No special requirements.

CLEAN UP
No special requirements.

PETROLEUM COKE (calcined or uncalcined)

DESCRIPTION
Black, finely divided residue from petroleum refining in the form of powder and small pieces. The provisions of this schedule should not apply to materials having a temperature below 55°C when loaded.

CHARACTERISTICS

ANGLE OF REPOSE	BULK DENSITY (kg/m^3)	STOWAGE FACTOR (m^3/t)
Not applicable	599 to 800	1.25 to 1.67
SIZE	**CLASS**	**GROUP**
Powder to small pieces	MHB	B

HAZARD
Uncalcined petroleum coke is liable to heat and ignite spontaneously when not loaded and transported under the provisions of this entry.
This cargo is non-combustible or has a low fire-risk.

STOWAGE & SEGREGATION
"Separated from" foodstuffs.
"Separated longitudinally by an intervening complete compartment or hold from" all goods of class 1, Divisions 1.1 and 1.5.
"Separated by a complete compartment or hold from" all other hazardous materials and dangerous goods (goods in packaged form and solid bulk materials).

HOLD CLEANLINESS
Clean and dry as relevant to the hazards of the cargo.

WEATHER PRECAUTIONS
No special requirements.

LOADING
1 When the cargo is loaded in a cargo space over a tank containing fuel or other material having a flashpoint under 93°C, the cargo having temperature of 55°C or higher shall not be loaded in the cargo space, unless part of the cargo having temperature 44°C or lower is loaded in a layer of at least 0.6 m thickness throughout the cargo space prior to loading the cargo having temperature of 55°C or higher.
2 When the cargo having temperature of 55°C or higher is loaded in accordance with the above requirement and the thickness of the layer of the cargo to be loaded is bigger than 1.0 m, the cargo shall first be loaded within a layer, the thickness of which is between 0.6 m and 1.0 m.
3 After the completion of loading operation specified in the above paragraphs, the loading operation may proceed.
The cargo shall be trimmed in accordance with the cargo information required by section 4 of this Code.

PRECAUTIONS
This cargo shall not be loaded when the temperature of this cargo exceeds 107°C. The master shall post warnings about the high temperature of this cargo near the cargo spaces

VENTILATION
No special requirements.

CARRIAGE
No special requirements.

DISCHARGE
No special requirements.

CLEAN UP
No special requirements.

EMERGENCY PROCEDURES

SPECIAL EMERGENCY EQUIPMENT TO BE CARRIED Protective clothing (gloves, boots, coveralls, headgear). Self-contained breathing apparatus. Spray nozzles.
EMERGENCY PROCEDURES Wear protective clothing and self-contained breathing apparatus. **EMERGENCY ACTION IN THE EVENT OF FIRE** Batten down; use of ship's fixed fire-fighting installation if available. Exclusion of air may be sufficient to control fire. **MEDICAL FIRST AID** Refer to the Medical First Aid Guide (MFAG), as amended.

PHOSPHATE (defluorinated)

DESCRIPTION
Granular, similar to fine sand. Shipped dry. Dark grey. No moisture content.

CHARACTERISTICS

ANGLE OF REPOSE	BULK DENSITY (kg/m^3)	STOWAGE FACTOR (m^3/t)
Not applicable	893	1.12
SIZE	**CLASS**	**GROUP**
Not applicable	Not applicable	C

HAZARD
No special hazards.
This cargo is non-combustible or has a low fire-risk.

STOWAGE & SEGREGATION
No special requirements.

HOLD CLEANLINESS
No special requirements.

WEATHER PRECAUTIONS
No special requirements.

LOADING
Trim in accordance with the relevant provisions required under sections 4 and 5 of the Code.

PRECAUTIONS
Appropriate precautions shall be taken to protect machinery and accommodation spaces from the dust of the cargo. Bilge wells of the cargo spaces shall be protected from ingress of the cargo. Due consideration shall be paid to protect equipment from the dust of the cargo. Persons, who may be exposed to the dust of the cargo, shall wear protective clothing, goggles or other equivalent dust eye-protection and dust filter masks, as necessary.

VENTILATION
No special requirements.

CARRIAGE
No special requirements.

DISCHARGE
No special requirements.

CLEAN UP
No special requirements.

PHOSPHATE ROCK (calcined)

DESCRIPTION
Usually in the form of fine ground rock or prills. Extremely dusty. Hygroscopic.

CHARACTERISTICS

ANGLE OF REPOSE	BULK DENSITY (kg/m^3)	STOWAGE FACTOR (m^3/t)
Not applicable	794 to 1563	0.64 to 1.26
SIZE	**CLASS**	**GROUP**
Not applicable	Not applicable	C

HAZARD
No special hazards.
This cargo is non-combustible or has a low fire-risk.
This cargo is hygroscopic and will cake if wet.

STOWAGE & SEGREGATION
No special requirements.

HOLD CLEANLINESS
No special requirements.

WEATHER PRECAUTIONS
This cargo shall be kept as dry as practicable before loading, during loading and during voyage. This cargo shall not be loaded during precipitation. During loading of this cargo all non-working hatches of the cargo spaces to which this cargo are loaded or to be loaded shall be closed.

LOADING
Trim in accordance with the relevant provisions required under sections 4 and 5 of the Code.

PRECAUTIONS
Appropriate precautions shall be taken to protect machinery and accommodation spaces from the dust of the cargo. Bilge wells of the cargo spaces shall be protected from ingress of the cargo. Due consideration shall be paid to protect equipment from the dust of the cargo. Persons, who may be exposed to the dust of the cargo, shall wear protective clothing, goggles or other equivalent dust eye-protection and dust filter masks, as necessary.

VENTILATION
No special requirements.

CARRIAGE
No special requirements.

DISCHARGE
If this cargo has hardened, it shall be trimmed to avoid the formation of overhangs, as necessary.

CLEAN UP
No special requirements.

PHOSPHATE ROCK (uncalcined)

DESCRIPTION
Phosphate rock is an ore in which phosphorus and oxygen are chemically united. Depending on the source, it is tan to dark grey, dry and dusty. Moisture: 0% to 2%. Depending on its source this cargo may have flow characteristic, but once settled it is not liable to shift.

CHARACTERISTICS

ANGLE OF REPOSE	BULK DENSITY (kg/m^3)	STOWAGE FACTOR (m^3/t)
Not applicable	1250 to 1429	0.70 to 0.80
SIZE	**CLASS**	**GROUP**
Powder to lumps	Not applicable	C

HAZARD
No special hazards.
This cargo is non-combustible or has a low fire-risk.

STOWAGE & SEGREGATION
No special requirements.

HOLD CLEANLINESS
No special requirements.

WEATHER PRECAUTIONS
No special requirements.

LOADING
Trim in accordance with the relevant provisions required under sections 4 and 5 of the Code.

PRECAUTIONS
Appropriate precautions shall be taken to protect machinery and accommodation spaces from the dust of the cargo. Bilge wells of the cargo spaces shall be protected from ingress of the cargo. Due consideration shall be paid to protect equipment from the dust of the cargo. Persons, who may be exposed to the dust of the cargo, shall wear protective clothing, goggles or other equivalent dust eye-protection and dust filter masks, as necessary.

VENTILATION
No special requirements.

CARRIAGE
No special requirements.

DISCHARGE
No special requirements.

CLEAN UP
No special requirements.

PIG IRON

DESCRIPTION
Foundry pig iron is cast in 28 grades into 20 kg pigs. In a random heap, pig iron occupies approximately 50% of the apparent volume.

CHARACTERISTICS

ANGLE OF REPOSE	BULK DENSITY (kg/m^3)	STOWAGE FACTOR (m^3/t)
Not applicable	3333 to 3571	0.28 to 0.30
SIZE	**CLASS**	**GROUP**
550 mm x 90 mm x 80 mm	Not applicable	C

HAZARD
No special hazards.
This cargo is non-combustible or has a low fire-risk.

STOWAGE & SEGREGATION
No special requirements.

HOLD CLEANLINESS
No special requirements.

WEATHER PRECAUTIONS
No special requirements.

LOADING
This cargo is usually loaded using tubs. In such case, tubs are usually lowered by a crane into the hold and the contents are spilled out. When this cargo is loaded using tubs, the first few tubs *shall* be lowered onto the tanktop to avoid damage.

Trim in accordance with the relevant provisions required under sections 4 and 5 of the Code.

As the density of the cargo is extremely high, the tanktop may be overstressed unless the cargo is evenly spread across the tanktop to equalize the weight distribution. Due consideration shall be paid to ensure that tanktop is not overstressed during voyage and during loading by a pile of the cargo.

PRECAUTIONS
No special requirements.

VENTILATION
No special requirements.

CARRIAGE
No special requirements.

DISCHARGE
No special requirements.

CLEAN UP
Prior to washing out the residues of this cargo, the bilge wells of the cargo spaces shall be cleaned.

PITCH PRILL

DESCRIPTION
Pitch Prill is made from tar produced during the coking of coal. It is black with a distinctive odour. It is extruded into its characteristic pencil shape to make handling easier.
Cargo softens between 40ºC to 50ºC. Melting point: 105ºC to 107ºC

CHARACTERISTICS

ANGLE OF REPOSE	BULK DENSITY (kg/m^3)	STOWAGE FACTOR (m^3/t)
Not applicable	500 to 800	1.25 to 2.0
SIZE	**CLASS**	**GROUP**
9 mm diameter and up to 0.7 cm long	MHB	B

HAZARDS
Melts when heated. Combustible, burns with a dense black smoke. Dust may cause skin and eye irritation. Normally this cargo has a low fire-risk. However powder of the cargo is easy to ignite and may cause fire and explosion. Special care should be taken for preventing fire during loading or discharging.

STOWAGE & SEGREGATION
Segregation as required for class 4.1 materials.

HOLD CLEANLINESS
No special requirements.

WEATHER PRECAUTIONS
Refer to the appendix to this schedule.

LOADING
Trim in accordance with the relevant provisions required under sections 4 and 5 of the Code.

This cargo shall not be stowed in a cargo space adjacent to heated tanks to avoid softening and melting of the cargo.

PRECAUTIONS
Refer to the appendix to this schedule.

VENTILATION
Surface ventilation only, either natural or mechanical, shall be conducted, as necessary, during the voyage for this cargo.

CARRIAGE
After the completion of loading of this cargo, the hatches of the cargo spaces shall be sealed. Condensation in the cargo spaces carrying this cargo shall be checked regularly during voyage.

DISCHARGE
Adequate measures shall be taken to prevent dust generation.

CLEAN UP
No special requirements.

EMERGENCY PROCEDURES

SPECIAL EMERGENCY EQUIPMENT TO BE CARRIED Protective clothing, gloves, boots, overalls, and headgear. Self-contained breathing apparatus, spray nozzles.
EMERGENCY PROCEDURES Wear protective clothing and self contained breathing apparatus. **EMERGENCY ACTION IN THE EVENT OF A FIRE** Batten down: use ship's fixed fire-fighting installation if available. Exclusion of air may be sufficient to control fire. **MEDICAL FIRST AID** Refer to Medical First Aid Guide (MFAG), as amended.

APPENDIX

PITCH PRILL

General Precautions:

1. Personnel engaged in loading shall be supplied with gloves, dust masks, approved protective clothing and goggles.
2. Eyewashes and sun screen creams shall be readily available.
3. Number of personnel in area of loading shall be kept to a minimum. Personnel in area of loading shall be aware of all the hazards involved.
4. Personnel engaged in the handling of this cargo *shall* wash well and keep out of the sun for a few days, after the cargo handling.
5. The hatch shall be closed after loading or discharge has ceased and the ship shall be washed out to remove all dust.
6. Due consideration shall be paid on suspending the cargo handling when wind is blowing dust.
7. After completion of discharging this cargo, the deck shall be cleaned up to remove all spillages.
8. Ventilation of the accommodation spaces *shall* be closed and the air conditioning systems for the accommodation spaces *shall* be on re-cycle mode when this cargo is being handled - either loading or discharging.
9. The cargo dust is easily ignited and may cause fire and explosion. Special care *shall* be taken to prevent fire during loading and discharging the cargo.

POTASH

DESCRIPTION
Brown, pink or white in colour, potash is produced in granular crystals. It is odourless and hygroscopic.

CHARACTERISTICS

ANGLE OF REPOSE	BULK DENSITY (kg/m^3)	STOWAGE FACTOR (m^3/t)
32° to 35°	971 to 1299	0.77 to 1.03
SIZE	**CLASS**	**GROUP**
Powder to 4 mm	Not applicable	C

HAZARD
No special hazards. This cargo is non-combustible or has a low fire-risk. This cargo is hygroscopic and will cake if wet.

STOWAGE & SEGREGATION
No special requirements.

HOLD CLEANLINESS
No special requirements.

WEATHER PRECAUTIONS
This cargo shall be kept as dry as practicable before loading, during loading and during voyage. This cargo shall not be loaded during precipitation. During loading of this cargo all non-working hatches of the cargo spaces to which this cargo are loaded or to be loaded shall be closed.

LOADING
Trim in accordance with the relevant provisions required under sections 4 and 5 of the Code.

PRECAUTIONS
No special requirements.

VENTILATION
The cargo spaces carrying this cargo shall not be ventilated during voyage.

CARRIAGE
After the completion of loading of this cargo, the hatches of the cargo spaces shall be sealed to prevent water ingress, as necessary.

DISCHARGE
If this cargo has hardened, it shall be trimmed to avoid the formation of overhangs, as necessary.

CLEAN UP
This cargo is mildly corrosive. After discharge of this cargo, the cargo spaces and the bilge wells shall be thoroughly swept clean and washed out to remove all traces of the cargo, except in the case that the cargo to be loaded has the same BCSN of the cargo to be loaded subsequent to discharge is POTASH.

POTASSIUM CHLORIDE

DESCRIPTION
Brown, pink or white in colour, powder. Potassium Chloride is produced in granular crystals. It is odourless and is soluble in water. Hygroscopic.

CHARACTERISTICS

ANGLE OF REPOSE	BULK DENSITY (kg/m^3)	STOWAGE FACTOR (m^3/t)
30° to 47°	893 to 1235	0.81 to 1.12
SIZE	**CLASS**	**GROUP**
Up to 4 mm	Not applicable	C

HAZARD
Even though this cargo is classified as non-hazardous, it may cause heavy corrosion when wet.
This cargo is non-combustible or has a low fire-risk.
This cargo is hygroscopic and will cake if wet.

STOWAGE & SEGREGATION
No special requirements.

HOLD CLEANLINESS
Clean and dry as relevant to the hazards of the cargo.

WEATHER PRECAUTIONS
This cargo shall be kept as dry as practicable. This cargo shall not be handled during precipitation. During handling of this cargo all non-working hatches of the cargo spaces into which this cargo is loaded or to be loaded shall be closed.

LOADING
Trim in accordance with the relevant provisions required under sections 4 and 5 of the Code.

PRECAUTIONS
No special requirements.

VENTILATION
The cargo spaces carrying this cargo shall not be ventilated during voyage.

CARRIAGE
After the completion of loading of this cargo, the hatches of the cargo spaces shall be sealed to prevent water ingress.

DISCHARGE
If this cargo has hardened, it shall be trimmed to avoid the formation of overhangs, as necessary.

CLEAN UP
After discharge of this cargo, the cargo spaces and the bilge wells shall be swept clean and thoroughly washed out.

POTASSIUM NITRATE UN 1486

DESCRIPTION
Transparent, colourless or white crystalline powder or crystals. Hygroscopic.

CHARACTERISTICS

ANGLE OF REPOSE	BULK DENSITY (kg/m^3)	STOWAGE FACTOR (m^3/t)
30° to 31°	1136	0.88
SIZE	**CLASS**	**GROUP**
Crystals or powder	5.1	B

HAZARD
Oxidizes when wet. Mixtures with combustible materials are readily ignited and may burn fiercely.
This cargo is hygroscopic and will cake if wet.

STOWAGE & SEGREGATION
"Separated from" foodstuffs.

HOLD CLEANLINESS
Clean and dry as relevant to the hazards of the cargo.

WEATHER PRECAUTIONS
This cargo shall be kept as dry as practicable. This cargo shall not be handled during precipitation. During handling of this cargo all non-working hatches of the cargo spaces into which this cargo is loaded or to be loaded shall be closed.

LOADING
Trim in accordance with the relevant provisions required under sections 4 and 5 of the Code.

PRECAUTIONS
Due regard shall be paid to prevent contact of the cargo and combustible materials.

VENTILATION
The cargo spaces carrying this cargo shall not be ventilated during voyage.

CARRIAGE
No special requirements.

DISCHARGE
If this cargo has hardened, it shall be trimmed to avoid the formation of overhangs, as necessary.

CLEAN UP
No special requirements.

EMERGENCY PROCEDURES

SPECIAL EMERGENCY EQUIPMENT TO BE CARRIED

Protective clothing (gloves, boots, coveralls, headgear).
Self-contained breathing apparatus.
Spray nozzles.

EMERGENCY PROCEDURES

Wear protective clothing and self-contained breathing apparatus.

EMERGENCY ACTION IN THE EVENT OF FIRE

Use copious quantities of water, which is best, applied in the form of a spray to avoid disturbing the surface of the material.
The material may fuse or melt, in which condition application of water may result in extensive scattering of the molten materials.
Exclusion of air or the use of CO_2 will not control the fire.
Due consideration should be given to the effect on the stability of the ship due to accumulated water.

MEDICAL FIRST AID

Refer to the Medical First Aid Guide (MFAG), as amended.

REMARKS
This material is non-combustible unless contaminated.

POTASSIUM SULPHATE

DESCRIPTION
Hard crystals or powder. Colourless or white.

CHARACTERISTICS

ANGLE OF REPOSE	BULK DENSITY (kg/m^3)	STOWAGE FACTOR (m^3/t)
31	1111	0.90
SIZE	**CLASS**	**GROUP**
Not applicable	Not applicable	C

HAZARD
No special hazards.
This cargo is non-combustible or has a low fire-risk.

STOWAGE & SEGREGATION
No special requirements.

HOLD CLEANLINESS
No special requirements.

WEATHER PRECAUTIONS
No special requirements.

LOADING
Trim in accordance with the relevant provisions required under sections 4 and 5 of the Code.

PRECAUTIONS
No special requirements.

VENTILATION
No special requirements.

CARRIAGE
No special requirements.

DISCHARGE
No special requirements.

CLEAN UP
No special requirements.

PUMICE

DESCRIPTION
Highly porous rock of volcanic origin. Greyish-white.

CHARACTERISTICS

ANGLE OF REPOSE	BULK DENSITY (kg/m^3)	STOWAGE FACTOR (m^3/t)
Not applicable	308 to 526	1.90 to 3.25
SIZE	**CLASS**	**GROUP**
Powder to lumps	Not applicable	C

HAZARD
No special hazards.
This cargo is non-combustible or has a low fire-risk.

STOWAGE & SEGREGATION
No special requirements.

HOLD CLEANLINESS
No special requirements.

WEATHER PRECAUTIONS
No special requirements.

LOADING
Trim in accordance with the relevant provisions required under sections 4 and 5 of the Code.

PRECAUTIONS
No special requirements.

VENTILATION
No special requirements.

CARRIAGE
No special requirements.

DISCHARGE
No special requirements.

CLEAN UP
No special requirements.

PYRITE (containing copper and iron)
This cargo can be categorized as Group A or C. This cargo entry is for cargo in Group C.

DESCRIPTION
Iron disulphide, containing copper and iron. Moisture 0% to 7%. Extremely dusty.

CHARACTERISTICS

ANGLE OF REPOSE	BULK DENSITY (kg/m^3)	STOWAGE FACTOR (m^3/t)
Not applicable	2000 to 3030	0.33 to 0.50
SIZE	**CLASS**	**GROUP**
Fines to lumps of 300 mm	Not applicable	C

HAZARD
No special hazards.
This cargo is non-combustible or has a low fire-risk.

STOWAGE & SEGREGATION
No special requirements.

HOLD CLEANLINESS
No special requirements.

WEATHER PRECAUTIONS
No special requirements.

LOADING
Trim in accordance with the relevant provisions required under sections 4 and 5 of the Code.

As the density of the cargo is extremely high, the tanktop may be overstressed unless the cargo is evenly spread across the tanktop to equalize the weight distribution. Due consideration shall be paid to ensure that tanktop is not overstressed during voyage and during loading by a pile of the cargo.

PRECAUTIONS
Appropriate precautions shall be taken to protect machinery and accommodation spaces from the dust of the cargo. Bilge wells of the cargo spaces shall be protected from ingress of the cargo. Due consideration shall be paid to protect equipment from the dust of the cargo. Persons, who may be exposed to the dust of the cargo, shall wear protective clothing, goggles or other equivalent dust eye-protection and dust filter masks, as necessary.

VENTILATION
No special requirements.

CARRIAGE
No special requirements.

DISCHARGE
No special requirements.

CLEAN UP
No special requirements.

PYRITES, CALCINED (Calcined Pyrites)

DESCRIPTION
Dust to fines, Calcined Pyrites is the residual product from the chemical industry where all types of metal sulphides are either used for the production of sulphuric acid or are processed to recover the elemental metals – copper, lead, zinc, etc. The acidity of the residue can be considerable, in particular, in the presence of water or moist air, where pH values between 1.3 and 2.1 are frequently noted.

CHARACTERISTICS

ANGLE OF REPOSE	BULK DENSITY (kg/m^3)	STOWAGE FACTOR (m^3/t)
Not applicable	2326	0.43
SIZE	**CLASS**	**GROUP**
Not applicable	MHB	A and B

HAZARD
Highly corrosive to steel when wet. Inhalation of dust is irritating and harmful. Cargo may liquefy.
This cargo is non-combustible or has a low fire-risk.

STOWAGE & SEGREGATION
"Separated from" foodstuffs.

HOLD CLEANLINESS
Due consideration shall be paid to cleaning and drying of the cargo spaces.

WEATHER PRECAUTIONS
This cargo shall be kept as dry as practicable before loading, during loading and during voyage. This cargo shall not be loaded during precipitation. During loading of this cargo all non-working hatches of the cargo spaces to which this cargo are loaded or to be loaded shall be closed.

LOADING
Trim in accordance with the relevant provisions required under sections 4 and 5 of the Code.

As the density of the cargo is extremely high, the tanktop may be overstressed unless the cargo is evenly spread across the tanktop to equalize the weight distribution. Due consideration shall be paid to ensure that tanktop is not overstressed during voyage and during loading by a pile of the cargo.

PRECAUTIONS
Bilge wells shall be clean, dry and covered as appropriate, to prevent ingress of the cargo. Ceiling boards shall be removed or sealed to prevent penetration by this cargo. The tanktop on which this cargo is to be loaded shall be covered with lime before loading.
Appropriate precautions shall be taken to protect machinery and accommodation spaces from the dust of the cargo. Bilge wells of the cargo spaces shall be protected from ingress of the cargo. Due consideration shall be paid to protect equipment from the dust of the cargo. Persons, who may be exposed to the dust of the cargo, shall wear goggles or other equivalent dust eye-protection and dust filter masks. Those persons shall wear protective clothing, as necessary.

VENTILATION
No special requirements.

CARRIAGE
After the completion of loading of this cargo, the hatches of the cargo spaces shall be sealed to prevent water ingress, as necessary.

DISCHARGE
No special requirements.

CLEAN UP
No special requirements.

EMERGENCY PROCEDURES

SPECIAL EMERGENCY EQUIPMENT TO BE CARRIED Nil
EMERGENCY PROCEDURES Nil **EMERGENCY ACTION IN THE EVENT OF FIRE** Nil (non-combustible). **MEDICAL FIRST AID** Refer to the Medical First Aid Guide (MFAG), as amended.

PYROPHYLLITE

DESCRIPTION
A natural hydrous aluminum silicate. Chalk-white. May be dusty.
Lumps: 75%, Rubble: 20%, Fines: 5%.

CHARACTERISTICS

ANGLE OF REPOSE	BULK DENSITY (kg/m^3)	STOWAGE FACTOR (m^3/t)
Not applicable	2000	0.50
SIZE	**CLASS**	**GROUP**
Lump to fine	Not applicable	C

HAZARD
No special hazards.
This cargo is non-combustible or has a low fire-risk.

STOWAGE & SEGREGATION
No special requirements.

HOLD CLEANLINESS
No special requirements.

WEATHER PRECAUTIONS
No special requirements.

LOADING
Trim in accordance with the relevant provisions required under sections 4 and 5 of the Code.

PRECAUTIONS
Appropriate precautions shall be taken to protect machinery and accommodation spaces from the dust of the cargo. Bilge wells of the cargo spaces shall be protected from ingress of the cargo. Due consideration shall be paid to protect equipment from the dust of the cargo. Persons, who may be exposed to the dust of the cargo, shall wear protective clothing, goggles or other equivalent dust eye-protection and dust filter masks, as necessary.

VENTILATION
No special requirements.

CARRIAGE
No special requirements.

DISCHARGE
No special requirements.

CLEAN UP
No special requirements.

QUARTZ

DESCRIPTION
Crystalline lumps.

CHARACTERISTICS

ANGLE OF REPOSE	BULK DENSITY (kg/m^3)	STOWAGE FACTOR (m^3/t)
Not applicable	1667	0.60
SIZE	**CLASS**	**GROUP**
Lumps: 50 mm to 300 mm	Not applicable	C

HAZARD
No special hazards.
This cargo is non-combustible or has a low fire-risk.

STOWAGE & SEGREGATION
No special requirements.

HOLD CLEANLINESS
No special requirements.

WEATHER PRECAUTIONS
No special requirements.

LOADING
Trim in accordance with the relevant provisions required under sections 4 and 5 of the Code.

PRECAUTIONS
No special requirements.

VENTILATION
No special requirements.

CARRIAGE
No special requirements.

DISCHARGE
No special requirements.

CLEAN UP
No special requirements.

QUARTZITE

DESCRIPTION
Quartzite is a compact, granular, metamorphosed sandstone containing quartz. It is white, red, brown or grey in colour and its size varies from large rocks to pebbles. It may also be shipped in semi-crushed and graded sizes.

CHARACTERISTICS

ANGLE OF REPOSE	BULK DENSITY (kg/m^3)	STOWAGE FACTOR (m^3/t)
Not applicable	1563	0.64
SIZE	**CLASS**	**GROUP**
10 mm to 200 mm	Not applicable	C

HAZARD
No special hazards. Dust of this cargo is very abrasive. This cargo is non-combustible or has a low fire-risk.

STOWAGE & SEGREGATION
No special requirements.

HOLD CLEANLINESS
No special requirements.

WEATHER PRECAUTIONS
No special requirements.

LOADING
Trim in accordance with the relevant provisions required under sections 4 and 5 of the Code.

PRECAUTIONS
Protect machinery and equipment from dust. Appropriate precautions shall be taken to protect machinery and accommodation spaces from the dust of the cargo. Bilge wells of the cargo spaces shall be protected from ingress of the cargo. Due consideration shall be paid to protect equipment from the dust of the cargo. Persons, who may be exposed to the dust of the cargo, shall wear goggles or other equivalent dust eye-protection and dust filter masks. Those persons shall wear protective clothing, as necessary.

VENTILATION
No special requirements.

CARRIAGE
No special requirements.

DISCHARGE
No special requirements.

CLEAN UP
No special requirements.

RADIOACTIVE MATERIAL, LOW SPECIFIC ACTIVITY (LSA-1) non-fissile or fissile-excepted UN 2912

DESCRIPTION
This schedule includes ores containing naturally occurring radionuclides (e.g., uranium, thorium) and natural or depleted uranium and thorium concentrates of such ores, including metals, mixtures and compounds.

CHARACTERISTICS

ANGLE OF REPOSE	BULK DENSITY (kg/m^3)	STOWAGE FACTOR (m^3/t)
Not applicable	-	-
SIZE	**CLASS**	**GROUP**
Not applicable	7	B

HAZARD
Low radiotoxicity. Some materials may possess chemical hazards.
This cargo is non-combustible or has a low fire-risk.

STOWAGE & SEGREGATION
"Separated from" foodstuffs.

HOLD CLEANLINESS
Clean and dry as relevant to the hazards of the cargo.

WEATHER PRECAUTIONS
This cargo shall be kept as dry as practicable. This cargo shall not be handled during precipitation. During handling of this cargo all non-working hatches of the cargo spaces into which this cargo is loaded or to be loaded shall be closed.

LOADING
Trim in accordance with the relevant provisions required under sections 4 and 5 of the Code.

PRECAUTIONS
Personnel shall not be unnecessarily exposed to dust of this cargo. Persons who may be exposed to the dust of the cargo shall wear protective clothing, goggles or other equivalent dust eye-protection and facemasks. There shall be no leakage outside the cargo space in which this cargo is stowed.

VENTILATION
The cargo spaces carrying this cargo shall not be ventilated during voyage.

CARRIAGE
All instructions provided by the shipper shall be followed for the carriage of this cargo.

DISCHARGE
All instructions provided by the shipper shall be followed for the discharge of this cargo.

CLEAN UP
Cargo spaces used for this cargo shall not be used for other goods until decontaminated. Refer to subsection 9.3.2.3 of this Code.

EMERGENCY PROCEDURES

SPECIAL EMERGENCY EQUIPMENT TO BE CARRIED Protective clothing (gloves, boots, coveralls, headgear). Self-contained breathing apparatus.
EMERGENCY PROCEDURES Wear protective clothing and self-contained breathing apparatus. **EMERGENCY ACTION IN THE EVENT OF FIRE** Batten down; use ship's fixed fire-fighting installation, if fitted. Use water spray to control spread of dust, if necessary. **MEDICAL FIRST AID** Refer to the Medical First Aid Guide (MFAG), as amended. Radio for medical advice.

REMARKS
Most materials are likely to be non-combustible. Speedily collect and isolate potentially contaminated equipment and cover. Seek expert advice.

RADIOACTIVE MATERIAL SURFACE CONTAMINATED OBJECTS (SCO-1), non-fissile or fissile-excepted UN 2913

DESCRIPTION

The radioactivity of SCO-1 is low. This schedule includes solid objects of non-radioactive material having a radioactive material distributed on its surfaces which:

1. the non-fixed contamination on the accessible surface, averaged over 300 cm^2 (or the area of the surface if less than 300 cm^2), does not exceed 4 Bq/cm^2 for beta and gamma emitters and low-toxicity alpha emitter, or 0.4 Bq/cm^2 for all other alpha emitters;
2. the fixed contamination on the accessible surface, averaged over 300 cm^2 (or the area of the surface if less than 300 cm^2), does not exceed 4×10^4 Bq/cm^2 for beta and gamma emitters and low-toxicity alpha emitters, or 4×10^3 Bq/cm^2 for all other alpha emitters; and
3. the non-fixed contamination plus the fixed contamination on the inaccessible surface, averaged over 300 cm^2 (or the area of the surface if less than 300cm^2), does not exceed 4×10^4 Bq/cm^2 for beta and gamma emitters and low-toxicity alpha emitters, or 4×10^3 Bq/cm^2 for all other alpha emitters.

CHARACTERISTICS

ANGLE OF REPOSE	BULK DENSITY (kg/m^3)	STOWAGE FACTOR (m^3/t)
Not applicable	-	-
SIZE	**CLASS**	**GROUP**
Not applicable	7	B

HAZARD

Low radioactivity.
This cargo is non-combustible or has a low fire-risk.

STOWAGE & SEGREGATION

"Separated from" foodstuffs.

HOLD CLEANLINESS

Clean and dry as relevant to the hazards of the cargo.

WEATHER PRECAUTIONS

This cargo shall be kept as dry as practicable. This cargo shall not be handled during precipitation. During handling of this cargo all non-working hatches of the cargo spaces into which this cargo is loaded or to be loaded shall be closed.

LOADING

Trim in accordance with the relevant provisions required under sections 4 and 5 of the Code.

PRECAUTIONS
Personnel shall not be exposed to dust of this cargo. Persons who may be exposed to the dust of the cargo shall wear protective clothing, goggles and facemasks. There shall be no leakage outside the cargo space in which this cargo is stowed.

VENTILATION
The cargo spaces carrying this cargo shall not be ventilated during voyage.

CARRIAGE
All instructions provided by the shipper shall be followed for the carriage of this cargo.

DISCHARGE
All instructions provided by the shipper shall be followed for the discharge of this cargo.

CLEAN UP
Cargo spaces used for this cargo shall not be used for other goods until decontaminated. Refer to subsection 9.3.2.3 of this Code.

EMERGENCY PROCEDURES

SPECIAL EMERGENCY EQUIPMENT TO BE CARRIED Protective clothing (gloves, boots, coveralls, headgear). Self-contained breathing apparatus.
EMERGENCY PROCEDURES Wear protective clothing and self-contained breathing apparatus. **EMERGENCY ACTION IN THE EVENT OF FIRE** Batten down; use ship's fixed fire-fighting installation, if fitted. Use water spray to control spread of dust, if necessary. **MEDICAL FIRST AID** Refer to the Medical First Aid Guide (MFAG), as amended. Radio for medical advice.

REMARKS
Most materials are likely to be non-combustible. Speedily collect and isolate potentially contaminated equipment and cover. Seek expert advice.

RASORITE (ANHYDROUS)

DESCRIPTION
A granular, yellow-white crystalline material with little or no dust. Abrasive. Hygroscopic.

CHARACTERISTICS

ANGLE OF REPOSE	BULK DENSITY (kg/m^3)	STOWAGE FACTOR (m^3/t)
Not applicable	1282 to 1493	0.67 to 0.78
SIZE	**CLASS**	**GROUP**
Less than 2.36 mm	Not applicable	C

HAZARD
No special hazards.
This cargo is non-combustible or has a low fire-risk.
This cargo is hygroscopic and will cake if wet.

STOWAGE & SEGREGATION
No special requirements.

HOLD CLEANLINESS
No special requirements.

WEATHER PRECAUTIONS
No special requirements.

LOADING
Trim in accordance with the relevant provisions required under sections 4 and 5 of the Code.

PRECAUTIONS
No special requirements.

VENTILATION
No special requirements.

CARRIAGE
No special requirements.

DISCHARGE
If this cargo has hardened, it shall be trimmed to avoid the formation of overhangs, as necessary.

CLEAN UP
No special requirements.

RUTILE SAND

DESCRIPTION
Fine particled brown to black sand. Abrasive. Shipped dry. May be dusty.

CHARACTERISTICS

ANGLE OF REPOSE	BULK DENSITY (kg/m^3)	STOWAGE FACTOR (m^3/t)
Not applicable	2500 to 2700	0.37 to 0.40
SIZE	**CLASS**	**GROUP**
0.15 mm or less	Not applicable	C

HAZARD
No special hazards.
This cargo is non-combustible or has a low fire-risk.

STOWAGE & SEGREGATION
No special requirements.

HOLD CLEANLINESS
No special requirements.

WEATHER PRECAUTIONS
This cargo shall be kept as dry as practicable before loading, during loading and during voyage. This cargo shall not be loaded during precipitation. During loading of this cargo all non-working hatches of the cargo spaces to which this cargo are loaded or to be loaded shall be closed.

LOADING
Trim in accordance with the relevant provisions required under sections 4 and 5 of the Code.

As the density of the cargo is extremely high, the tanktop may be overstressed unless the cargo is evenly spread across the tanktop to equalize the weight distribution. Due consideration shall be paid to ensure that tanktop is not overstressed during voyage and during loading by a pile of the cargo.

PRECAUTIONS
Bilge wells shall be clean, dry and covered as appropriate, to prevent ingress of the cargo.
Appropriate precautions shall be taken to protect machinery and accommodation spaces from the dust of the cargo. Bilge wells of the cargo spaces shall be protected from ingress of the cargo. Due consideration shall be paid to protect equipment from the dust of the cargo. Persons, who may be exposed to the dust of the cargo, shall wear goggles or other equivalent dust eye-protection and dust filter masks. Those persons shall wear protective clothing, as necessary.

VENTILATION
No special requirements.

CARRIAGE
No special requirements.

DISCHARGE
No special requirements.

CLEAN UP
No special requirements.

SALT

DESCRIPTION
Fine white grains. Moisture variable to 5.5%. This cargo is highly soluble. In the case of ingress of water into the holds, there is a risk to the loss of the stability of the ship through dissolution of this cargo (formation of a wet base and shifting of cargo).

CHARACTERISTICS

ANGLE OF REPOSE	BULK DENSITY (kg/m^3)	STOWAGE FACTOR (m^3/t)
Not applicable	893 to 1235	0.81 to 1.12
SIZE	**CLASS**	**GROUP**
Grains up to 12 mm	Not applicable	C

HAZARD
No special hazards. This cargo is non-combustible or has a low fire-risk.

STOWAGE & SEGREGATION
No special requirements.

HOLD CLEANLINESS
Clean and dry as relevant to the hazards of the cargo.

WEATHER PRECAUTIONS
This cargo shall be kept as dry as practicable. This cargo shall not be handled during precipitation. During handling of this cargo all non-working hatches of the cargo spaces into which this cargo is loaded or to be loaded shall be closed.

LOADING
Trim in accordance with the relevant provisions required under sections 4 and 5 of the Code.

PRECAUTIONS
The parts of the cargo space in contact with the cargo such as tanktops, hoppers, side plating and bulkheads shall be lime washed or coated with paint to prevent corrosion.

VENTILATION
The cargo spaces carrying this cargo shall not be ventilated during voyage.

CARRIAGE
After the completion of loading of this cargo, the hatches of the cargo spaces shall be sealed.

DISCHARGE
No special requirements.

CLEAN UP
No special requirements.

SALT CAKE

DESCRIPTION
Impure sodium sulphate. White in colour. Granular, shipped dry.

CHARACTERISTICS

ANGLE OF REPOSE	BULK DENSITY (kg/m^3)	STOWAGE FACTOR (m^3/t)
Not applicable	1052 to 1124	0.89 to 0.95
SIZE	**CLASS**	**GROUP**
10 mm to 200 mm	Not applicable	C

HAZARD
No special hazards.
This cargo is non-combustible or has a low fire-risk.

STOWAGE & SEGREGATION
No special requirements.

HOLD CLEANLINESS
No special requirements.

WEATHER PRECAUTIONS
No special requirements.

LOADING
Trim in accordance with the relevant provisions required under sections 4 and 5 of the Code.

PRECAUTIONS
No special requirements.

VENTILATION
No special requirements.

CARRIAGE
No special requirements.

DISCHARGE
No special requirements.

CLEAN UP
No special requirements.

SALT ROCK

DESCRIPTION
White. Moisture content 0.02%.

CHARACTERISTICS

ANGLE OF REPOSE	BULK DENSITY (kg/m^3)	STOWAGE FACTOR (m^3/t)
Not applicable	943 to 1020	0.98 to 1.06
SIZE	**CLASS**	**GROUP**
Small granules	Not applicable	C

HAZARD
No special hazards.
This cargo is non-combustible or has a low fire-risk.

STOWAGE & SEGREGATION
No special requirements.

HOLD CLEANLINESS
No special requirements.

WEATHER PRECAUTIONS
No special requirements.

LOADING
Trim in accordance with the relevant provisions required under sections 4 and 5 of the Code.

PRECAUTIONS
No special requirements.

VENTILATION
No special requirements.

CARRIAGE
No special requirements.

DISCHARGE
No special requirements.

CLEAN UP
No special requirements.

SAND

DESCRIPTION
Usually fine particles. Abrasive and dusty.
Sands included in this schedule are:

FOUNDRY SAND
POTASSIUM FELSPAR SAND
QUARTZ SAND
SILICA SAND
SODA FELSPAR SAND

CHARACTERISTICS

ANGLE OF REPOSE	BULK DENSITY (kg/m^3)	STOWAGE FACTOR (m^3/t)
Not applicable	1020 to 2000	0.50 to 0.98
SIZE	**CLASS**	**GROUP**
0.1 mm to 5 mm	Not applicable	C

HAZARD
Inhalation of silica dust can result in respiratory disease. Silica particulates are easily transported by air and inhaled.
Industrial sand may be coated with resin and will cake if exposed to heat (55°C to 60°C).
This cargo is non-combustible or has a low fire-risk.

STOWAGE & SEGREGATION
Industrial sand coated with resin shall be "separated from" sources of heat.

HOLD CLEANLINESS
Clean and dry as relevant to the hazards of the cargo.

WEATHER PRECAUTIONS
This cargo shall be kept as dry as practicable before loading, during loading and during voyage. This cargo shall not be loaded during precipitation. During loading of this cargo all non-working hatches of the cargo spaces to which this cargo are loaded or to be loaded shall be closed.

LOADING
Trim in accordance with the relevant provisions required under sections 4 and 5 of the Code.

PRECAUTIONS
Appropriate precautions shall be taken to protect machinery and accommodation spaces from the dust of the cargo. Bilge wells of the cargo spaces shall be protected from ingress of the cargo. Due consideration shall be paid to protect equipment from the dust of the cargo. Persons, who may be exposed to the dust of the cargo, shall wear goggles or other equivalent dust eye-protection and dust filter masks. Those persons shall wear protective clothing, as necessary.

VENTILATION
No special requirements.

CARRIAGE
The bilge wells of the cargo spaces carrying this cargo shall be kept dry.

DISCHARGE
No special requirements.

CLEAN UP
After discharge of this cargo, particular attention shall be paid to bilge wells of the cargo spaces.

SAWDUST

DESCRIPTION
Fine particles of wood.

CHARACTERISTICS

ANGLE OF REPOSE	BULK DENSITY (kg/m^3)	STOWAGE FACTOR (m^3/t)
Not applicable	-	-
SIZE	**CLASS**	**GROUP**
Not applicable	MHB	B

HAZARD
Spontaneous combustion if not clean, dry and free from oil. Liable to cause oxygen depletion within the cargo space.

STOWAGE & SEGREGATION
Segregation as required for class 4.1 materials.
"Separated from" all class 5.1 liquids and all class 8 liquids.

HOLD CLEANLINESS
Clean and dry as relevant to the hazards of the cargo.

WEATHER PRECAUTIONS
This cargo shall be kept as dry as practicable. This cargo shall not be handled during precipitation. During handling of this cargo all non-working hatches of the cargo spaces into which this cargo is loaded or to be loaded shall be closed.

LOADING
Trim in accordance with the relevant provisions required under sections 4 and 5 of the Code.

PRECAUTIONS
Bilge wells shall be clean, dry and covered as appropriate, to prevent ingress of the cargo. Prior to loading this cargo, the shipper shall provide the master with a certificate stating that the cargo is clean, dry and free from oil.

VENTILATION
Surface ventilation only, either natural or mechanical, shall be conducted, as necessary, during the voyage for this cargo.

CARRIAGE
No special requirements.

DISCHARGE
No special requirements.

CLEAN UP
No special requirements.

EMERGENCY PROCEDURES

SPECIAL EMERGENCY EQUIPMENT TO BE CARRIED Nil
EMERGENCY PROCEDURES Nil **EMERGENCY ACTION IN THE EVENT OF FIRE** Batten down; use ship's fixed fire-fighting installation if fitted. Exclusion of air may be sufficient to control fire. **MEDICAL FIRST AID** Refer to the Medical First Aid Guide (MFAG), as amended.

SCRAP METAL

DESCRIPTION
"Scrap" iron or steel covers an enormous range of ferrous metals, principally intended for recycling.

CHARACTERISTICS

ANGLE OF REPOSE	BULK DENSITY (kg/m^3)	STOWAGE FACTOR (m^3/t)
Not applicable	Varies	Varies
SIZE	**CLASS**	**GROUP**
Varies	Not applicable	C

HAZARD
No special hazards. This cargo is non-combustible or has a low fire-risk except when cargo contains swarf (fine metal turnings liable to spontaneous combustion) refer to the entry for ferrous metal borings, shavings turnings or cutting in this Code.

STOWAGE & SEGREGATION
No special requirements.

HOLD CLEANLINESS
No special requirements.

WEATHER PRECAUTIONS
This cargo shall be kept as dry as practicable before loading, during loading and during voyage. This cargo shall not be loaded during precipitation. During loading of this cargo all non-working hatches of the cargo spaces to which this cargo are loaded or to be loaded shall be closed.

LOADING
Refer to the appendix to this schedule.

PRECAUTIONS
Refer to the appendix to this schedule.

VENTILATION
Surface ventilation only, either natural or mechanical, shall be conducted, as necessary, during the voyage for this cargo.

CARRIAGE
Bilges in the cargo spaces carrying this cargo shall not be pumped unless absolutely necessary. Bilgewater of this cargo may contain a certain amount of dirt and oil from old machinery. Refer to the appendix to this individual schedule.

DISCHARGE
When this cargo is discharged by magnet or spider grab:

.1 the deck and deck machineries shall be protected from falling cargo; and
.2 damages to the ship shall be checked, after the completion of discharge.

CLEAN UP

Prior to cleaning up the cargo spaces for this cargo, the crew shall be informed of danger due to broken glass and sharp edges. Prior to washing out the residues of this cargo, any oil spillages shall be cleaned from the tank tops and the bilge wells of the cargo spaces for this cargo.

APPENDIX

SCRAP METAL

Handling of this cargo varies from magnets to spider grabs, depending usually on the size of material. This cargo may include articles from the size of car bodies to fine metal turnings (swarf). The weight of individual pieces will also vary greatly, ranging from heavy machinery to tin cans.

Loading

Before loading, the cargo spaces *shall* be prepared as per general loading practice and any areas liable to be damaged by falling cargo *shall* be protected with dunnage. This includes decks and coamings in way of the material's path to the cargo spaces. Removing the ship's side rails may be advisable.

A layer of this cargo *shall* be carefully placed over the tank top in the square to cushion any fall out. Magnet and grab drivers *shall* be instructed not to release their loads too high above the pile.

The usual method of loading is to form a pile along the ship's centre line and use the slope to roll material into the ends and sides. Every effort must be made to work the wings and ends to evenly distribute the weight. If this is not done, the light high volume pieces will roll to the wings and the small heavy pieces will concentrate in the square.

When pumping the bilge wells, the master shall be aware of that a certain amount of dirt and oil can be expected from old machinery. Broken glass and sharp jagged edges may be present and care *shall* be taken by personnel working near scrap.

Before hatches are closed, the cargo spaces shall be checked that no sharp projections could pierce the ship's side.

SEED CAKE, containing vegetable oil UN 1386
(a) mechanically expelled seeds, containing more than 10% of oil or more than 20% of oil and moisture combined.

The range of oil and moisture content is indicated in the figure.

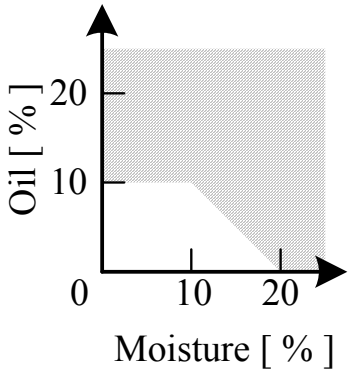

To be carried in bulk only with special permission from the competent authority.

DESCRIPTION
Residue remaining after oil has been expelled mechanically from oil-bearing seeds. The cereals and cereal products included in this schedule are those derived from:

Bakery materials
Barley malt pellets
Beet
Bran pellets
Brewers grain pellets
Citrus pulp pellets
Coconut
Copra
Corn gluten
Cotton seed
Expellers
Gluten pellets
Ground nuts, meal
Hominy chop
Linseed
Maize
Meal, oily
Mill feed pellets
Niger seed, expellers
Oil cake
Palm kernel
Peanuts
Pellets, cereal
Pollard pellets
Rape seed
Rice broken
Rice bran
Safflower seed
Seed expellers, oily
Soyabean
Strussa pellets
Sunflower seed
Toasted meals

The above may be shipped in the form of pulp, meals, cake, pellets and expellers.

CHARACTERISTICS

ANGLE OF REPOSE	BULK DENSITY (kg/m^3)	STOWAGE FACTOR (m^3/t)
Not applicable	478 to 719	1.39 to 2.09
SIZE	**CLASS**	**GROUP**
Not applicable	4.2	B

HAZARD
May self-heat slowly and, if wet or containing an excessive proportion of unoxidized oil, ignite spontaneously. Liable to oxidize, causing subsequent reduction of oxygen in the cargo space. Carbon dioxide may be produced.

STOWAGE & SEGREGATION
No special requirements other than prescribed in section 9.3 of this Code.

HOLD CLEANLINESS
Clean and dry as relevant to the hazards of the cargo.

WEATHER PRECAUTIONS
This cargo shall be kept as dry as practicable. This cargo shall not be handled during precipitation. During handling of this cargo all non-working hatches of the cargo spaces into which this cargo is loaded or to be loaded shall be closed.

LOADING
Trim in accordance with the relevant provisions required under sections 4 and 5 of the Code.

PRECAUTIONS
This cargo shall only be accepted for loading when the temperature of the cargo is not higher than ambient temperature plus 10°C or 55°C, whichever is lower. Before shipment, this cargo shall be properly aged; the duration of ageing required varies with the oil content. The competent authority may permit seed cakes described in this schedule to be carried under conditions governing SEED CAKE (b), when satisfied, as a result of tests, that such relaxation is justified (see following schedule). Certificates from the competent authority giving such permission shall state the oil content and moisture content. The temperature of this cargo shall be measured regularly at a number of depths in the cargo spaces and recorded during the voyage. If the temperature of the cargo reaches 55°C and continues to increase, ventilation to the cargo shall be stopped. If self-heating continues, then carbon dioxide or inert gas shall be introduced to the cargo space. Entry of personnel into cargo spaces for this cargo shall not be permitted until tests have been carried out and it has been established that the oxygen content has been restored to a normal level.

VENTILATION
The cargo spaces carrying this cargo shall not be mechanically ventilated during voyage to prevent self-heating of the cargo, except in case of emergency.

CARRIAGE
Hatches of the cargo spaces carrying this cargo shall be weathertight to prevent the ingress of water.

DISCHARGE
No special requirements.

CLEAN UP
No special requirements.

EMERGENCY PROCEDURES

SPECIAL EMERGENCY EQUIPMENT TO BE CARRIED Self-contained breathing apparatus.
EMERGENCY PROCEDURES Wear self-contained breathing apparatus. **EMERGENCY ACTION IN THE EVENT OF FIRE** Batten down; use ship's fixed fire-fighting installation, if fitted. **MEDICAL FIRST AID** Refer to the Medical First Aid Guide (MFAG), as amended.

SEED CAKE, containing vegetable oil UN 1386
(b) solvent extraction and expelled seeds, containing not more than 10% of oil and when the amount of moisture is higher than 10%, not more than 20% of oil and moisture combined.

Note: This entry covers the following:

.1 all solvent extracted and expelled seed cakes containing not more than 10% oil, and not more than 10% moisture; and

.2 all solvent extracted and expelled seed cakes containing not more than 10% oil and moisture content higher than 10%, in which case, the oil and moisture combined must not exceed 20%.

The range of oil and moisture content is indicated in the figure.

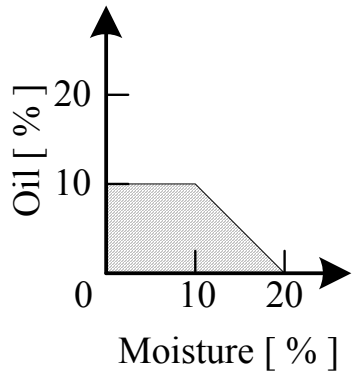

When in solvent extracted seed cake, the oil or oil and moisture content exceeds the percentages stated above, guidance should be sought from the competent authorities.

DESCRIPTION
Residue remaining after oil has been extracted by a solvent process or expelled mechanically from oil-bearing seeds. The cereals and cereal products included in this schedule are those derived from:

Bakery materials
Barley malt pellets
Beet
Bran pellets
Brewers grain pellets
Citrus pulp pellets
Coconut
Copra
Corn gluten
Cotton seed
Expellers
Gluten pellets
Ground nuts, meal
Hominy chop
Linseed
Maize
Meal, oily
Mill feed pellets
Niger seed, expellers
Oil cake
Palm kernel
Peanuts
Pellets, cereal
Pollard pellets
Rape seed
Rice broken
Rice bran
Safflower seed
Seed expellers, oily
Soyabean
Strussa pellets
Sunflower seed
Toasted meals

The above may be shipped in the form of pulp, meals, cake, pellets and expellers.
The provisions of this schedule should not apply to solvent extracted rape seed meal, pellets, soya bean meal, cotton seed meal and sunflower seed meal containing not more than 4% oil and 15% oil and moisture combined. A certificate from a person recognized by the competent authority of the country of shipment should be provided by the shipper, prior to loading, stating that the provisions for the exemption are met.

CHARACTERISTICS

ANGLE OF REPOSE	BULK DENSITY (kg/m^3)	STOWAGE FACTOR (m^3/t)
Not applicable	478 to 719	1.39 to 2.09
SIZE	**CLASS**	**GROUP**
Not applicable	4.2	B

HAZARD
May self-heat slowly and, if wet or containing an excessive proportion of unoxidized oil, ignite spontaneously. Liable to oxidize, causing subsequent reduction of oxygen in the cargo space. Carbon dioxide may also be produced.

STOWAGE & SEGREGATION
No special requirements other than prescribed in section 9.3 of this Code.
If the bulkhead between the cargo space and the engine-room is not insulated to class A-60 standard, solvent extraction seed shall be stowed "away from" the bulkhead.

HOLD CLEANLINESS
Clean and dry as relevant to the hazards of the cargo.

WEATHER PRECAUTIONS
This cargo shall be kept as dry as practicable. This cargo shall not be handled during precipitation. During handling of this cargo all non-working hatches of the cargo spaces into which this cargo is loaded or to be loaded shall be closed.

LOADING
This cargo shall only be accepted for loading when the cargo is substantially free from flammable solvent and a certificate from a person recognized by the competent authority of the country of shipment specifying the oil content and moisture content is issued.
Trim in accordance with the relevant provisions required under sections 4 and 5 of the Code.

PRECAUTIONS
Before shipment, this cargo shall be properly aged; the duration of ageing required varies with the oil content. The temperature of this cargo shall be measured regularly at a number of depths in the cargo spaces and recorded during the voyage. If the temperature of the cargo reaches 55°C and continues to increase, ventilation to the cargo shall be stopped. If self-heating continues, then carbon dioxide or inert gas shall be introduced to the cargo space. In the case of solvent-extracted seed cakes the use of carbon dioxide or inert gas shall be withheld until it becomes apparent that fire is not liable to take place in the cargo space, to avoid the possibility of ignition of solvent vapours. Entry of personnel into cargo spaces for this cargo shall not be

permitted until tests have been carried out and it has been established that the oxygen content has been restored to a normal level. When the planned interval between the commencement of loading and the completion of discharge of this cargo exceeds 5 days, the cargo shall not be accepted for loading unless the cargo is to be carried in a cargo space equipped with facilities for introducing carbon dioxide or inert gas into the space. Smoking and the use of naked lights shall be prohibited in the vicinity of the cargo space during loading and unloading and on entry into the cargo spaces at any other time. Electrical circuits for equipment in cargo spaces which is unsuitable for use in an explosive atmosphere shall be isolated by removal of links in the system other than fuses. Spark-arresting screens shall be fitted to ventilators to the cargo spaces containing of this cargo.

VENTILATION
Surface ventilation either natural or mechanical should be conducted, as necessary, for removing any residual solvent vapour. To prevent self-heating of the cargo, caution is required when using mechanical ventilation.

CARRIAGE
Hatches of the cargo spaces carrying this cargo shall be weathertight to prevent the ingress of water.

DISCHARGE
No special requirements.

CLEAN UP
No special requirements.

EMERGENCY PROCEDURES

SPECIAL EMERGENCY EQUIPMENT TO BE CARRIED Self-contained breathing apparatus.
EMERGENCY PROCEDURES Wear self-contained breathing apparatus. **EMERGENCY ACTION IN THE EVENT OF FIRE** Batten down. Use ship's fixed fire-fighting installation, if fitted. **MEDICAL FIRST AID** Refer to the Medical First Aid Guide (MFAG), as amended.

REMARKS
In the case of solvent-extracted seed cake, the use of CO_2 should be withheld until fire is apparent.

The use of CO_2 is limited to controlling the fire and further amounts may need to be injected from time to time during the sea passage to reduce the oxygen content in the hold. On arrival in port, the cargo will need to be dug out to reach the seat of the fire.

SEED CAKE UN 2217
with not more than 1.5% oil
and not more than 11% moisture.

The range of oil and moisture content is indicated in the figure.

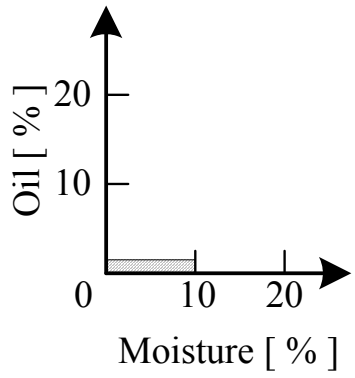

DESCRIPTION
Residue remaining after oil has been extracted by a solvent process from oil-bearing seeds. The cereals and cereal products included in this schedule are those derived from:

Bakery materials
Barley malt pellets
Beet
Bran pellets
Brewers grain pellets
Citrus pulp pellets
Coconut
Copra
Corn gluten
Cotton seed
Expellers
Gluten pellets
Ground nuts, meal
Hominy chop
Linseed
Maize
Meal, oily
Mill feed pellets
Niger seed, expellers
Oil cake
Palm kernel
Peanuts
Pellets, cereal
Pollard pellets
Rape seed
Rice broken
Rice bran
Safflower seed
Seed expellers, oily
Soyabean
Strussa pellets
Sunflower seed

The above may be shipped in the form of pulp, meals, cake, pellets, expellers.
The provisions of this entry should not apply to solvent-extracted rape seed meal pellets, soya bean meal, cotton seed meal and sunflower seed meal containing not more than 1.5% oil and not more than 11% moisture and being substantially free from flammable solvent. A certificate from a person recognized by the competent authority of the country of shipment should be provided by the shipper, prior to loading, stating that the provisions for the exemption are met.

CHARACTERISTICS

ANGLE OF REPOSE	BULK DENSITY (kg/m^3)	STOWAGE FACTOR (m^3/t)
Not applicable	478 to 719	1.39 to 2.09
SIZE	**CLASS**	**GROUP**
0.1 mm - 5 mm	4.2	B

HAZARD
May self-heat slowly and, if wet or containing an excessive proportion of unoxidized oil, ignite spontaneously. Liable to oxidize, causing subsequent reduction of oxygen in the cargo space. Carbon dioxide may also be produced.

STOWAGE & SEGREGATION
No special requirements other than prescribed in section 9.3 of this Code.
If the bulkhead between the cargo space and the engine-room is not insulated to class A-60 standard, this cargo shall be stowed "away from" the bulkhead.

HOLD CLEANLINESS
Clean and dry as relevant to the hazards of the cargo.

WEATHER PRECAUTIONS
This cargo shall be kept as dry as practicable. This cargo shall not be handled during precipitation. During handling of this cargo all non-working hatches of the cargo spaces into which this cargo is loaded or to be loaded shall be closed.

LOADING
This cargo shall only be accepted for loading when the cargo is substantially free from flammable solvent and a certificate from a person recognized by the competent authority of the country of shipment specifying the oil content and moisture content is issued.
Trim in accordance with the relevant provisions required under sections 4 and 5 of the Code.

PRECAUTIONS
The temperature of this cargo shall be measured regularly at a number of depths in the cargo spaces and recorded during the voyage. If the temperature of the cargo reaches 55°C and continues to increase, ventilation to the cargo shall be stopped. If self-heating continues, then carbon dioxide or inert gas shall be introduced to the cargo space. The use of carbon dioxide or inert gas shall be withheld until it becomes apparent that fire is not liable to take place in the cargo space, to avoid the possibility of ignition of solvent vapours. Entry of personnel into cargo spaces for this cargo shall not be permitted until tests have been carried out and it has been established that the oxygen content has been restored to a normal level. When the planned interval between the commencement of loading and the completion of discharge of this cargo exceeds 5 days, the cargo shall not be accepted for loading unless the cargo is to be carried in a cargo space equipped with facilities for introducing carbon dioxide or inert gas into the space. Smoking and the use of naked lights shall be prohibited in the vicinity of the cargo space during loading and unloading and on entry into the cargo spaces at any other time. Electrical circuits for equipment in cargo spaces which is unsuitable for use in an explosive atmosphere, shall be isolated by removal of links in the system other than fuses. Spark-arresting screens shall be fitted to ventilators to the cargo spaces containing of this cargo.

VENTILATION
Surface ventilation either natural or mechanical should be conducted, as necessary, for removing any residual solvent vapour. To prevent self-heating of the cargo caution is required when using mechanical ventilation.

CARRIAGE
Hatches of the cargo spaces carrying this cargo shall be weathertight to prevent the ingress of water.

DISCHARGE
No special requirements.

CLEAN UP
No special requirements.

EMERGENCY PROCEDURES

SPECIAL EMERGENCY EQUIPMENT TO BE CARRIED Self-contained breathing apparatus.
EMERGENCY PROCEDURES Wear self-contained breathing apparatus. **EMERGENCY ACTION IN THE EVENT OF FIRE** Batten down. Used ship's fixed fire-fighting installation, if fitted. **MEDICAL FIRST AID** Refer to the Medical First Aid Guide (MFAG), as amended.

REMARKS
For solvent-extracted seed cake, the use of CO_2 should be withheld until fire is apparent.
The use of CO_2 is limited to controlling the fire, and further amounts may need to be injected from time to time during passage to reduce the oxygen content in the hold. On arrival in port, the cargo will need to be dug out to reach the seat of the fire.

SEED CAKE
(non-hazardous)

DESCRIPTION

The provisions of this schedule apply to solvent extracted rape seed meal, pellets, soya bean meal, cotton seed meal and sunflower seed meal, containing not more than 4% oil and 15% oil and moisture combined and being substantially free from flammable solvents.

A certificate from a person recognized by the competent authority of the country of shipment shall be provided by the shipper, prior to loading, stating that the requirements for exemption as set out either in the schedule for seed cake UN 1386 (b) or UN 2217, whichever is applicable, are met.

CHARACTERISTICS

ANGLE OF REPOSE	BULK DENSITY (kg/m^3)	STOWAGE FACTOR (m^3/t)
Not applicable	478 to 719	1.39 to 2.09
SIZE	**CLASS**	**GROUP**
Not applicable	Not applicable	C

HAZARD
No special hazards.
This cargo is non-combustible or has a low fire-risk.

STOWAGE & SEGREGATION
No special requirements.

HOLD CLEANLINESS
Clean and dry as relevant to the hazards of the cargo.

WEATHER PRECAUTIONS
This cargo shall be kept as dry as practicable. This cargo shall not be handled during precipitation. During handling of this cargo all non-working hatches of the cargo spaces into which this cargo is loaded or to be loaded shall be closed.

LOADING
Trim in accordance with the relevant provisions required under sections 4 and 5 of the Code.

PRECAUTIONS
No special requirements.

VENTILATION
No special requirements.

CARRIAGE
Hatches of the cargo spaces carrying this cargo shall be weathertight to prevent the ingress of water.

DISCHARGE
No special requirements.

CLEAN UP
No special requirements.

SILICOMANGANESE (low carbon)
(with known hazard profile or known to evolve gases)
(with silicon content of 25% or more)

DESCRIPTION
Silicomanganese is an extremely heavy cargo, silvery metallic material with a grey oxide coating.

CHARACTERISTICS

ANGLE OF REPOSE	BULK DENSITY (kg/m^3)	STOWAGE FACTOR (m^3/t)
Not applicable	approx. 3000	0.18 to 0.26
SIZE	**CLASS**	**GROUP**
approx. 10 to 100 mm	MHB	B

HAZARD
In contact with water may evolve hydrogen, a flammable gas that may form explosive mixtures with air and may, under similar conditions produce phosphine and arsine, which are highly toxic gases.
Cargo is liable to reduce oxygen content in a cargo space.
This cargo is non-combustible or has a low fire-risk.

STOWAGE & SEGREGATION
Segregation as required for class 4.3 materials.
"Separated from" foodstuffs and all class 8 liquids.

HOLD CLEANLINESS
Clean and dry as relevant to the hazards of the cargo.

WEATHER PRECAUTIONS
This cargo shall be kept as dry as practicable before loading, during loading and during voyage. This cargo shall not be loaded during precipitation. During loading of this cargo all non-working hatches of the cargo spaces to which this cargo are loaded or to be loaded shall be closed.

LOADING
Trim in accordance with the relevant provisions required under sections 4 and 5 of the Code.

As the density of the cargo is extremely high, the tanktop may be overstressed unless the cargo is evenly spread across the tanktop to equalize the weight distribution. Due consideration shall be paid to ensure that tanktop is not overstressed during voyage and during loading by a pile of the cargo.

PRECAUTIONS

The manufacturer or the shipper shall provide the master with a certificate stating that, after manufacture, the cargo was stored under cover, but exposed to open air for not less than three days prior to shipment. Smoking shall not be allowed on deck and in the cargo spaces and "NO SMOKING" signs shall be displayed on deck whenever this cargo is on board. Electrical fittings and cables shall be in good condition and properly safeguarded against short circuits and sparking. Where a bulkhead is required to be suitable for segregation purposes, cable and conduit penetrations of the decks and bulkheads shall be sealed against the passage of gas and vapour. Whenever practicable, ventilation systems for the living quarters shall be shut down or screened and air condition systems shall be placed on recirculation during loading and discharge of this cargo, in order to minimize the entry of dust into living quarters or other interior spaces of the ship. Precautions shall be taken to minimize the extent to which dust of this cargo may come in contact with moving parts of deck machinery and external navigation aids such as navigation lights.

Entry of personnel into enclosed spaces should not be permitted until tests have been carried out and it has been established that the oxygen content has been restored to a normal level throughout the space and that no toxic gas is present, unless adequate ventilation and air circulation throughout the free space above the material has been effected. See appendix 6 in this Code for general precautions and procedures for entering enclosed spaces.

Prohibition of smoking in dangerous areas should be enforced, and clearly legible "NO SMOKING" signs should be displayed.

Electrical fittings and cables should be in good condition and properly safeguarded against short circuits and sparking. Where a bulkhead is required to be suitable for segregation purposes, cable and conduit penetrations of the decks and bulkheads should be sealed against the passage of gas and vapour.

Whenever possible, ventilation systems should be shut down or screened and air condition systems, if any, placed on recirculation during loading or discharge, in order to minimize the entry of dust into living quarters or other interior spaces of the ship.

Precautions should be taken to minimize the extent to which dust may come in contact with moving parts of deck machinery and external navigation aids (e.g., navigation lights).

VENTILATION

Mechanical surface ventilation shall be conducted during the voyage, as necessary, for the cargo spaces carrying this cargo.

CARRIAGE

For quantitative measurements of oxygen and flammable gases liable to be evolved by the cargo, a suitable detector for each gas or combination of gases shall be on board while this cargo is carried. The detector shall be suitable for use in an atmosphere without oxygen and of certified safe type for use in explosive atmosphere. The concentrations of these gases in the cargo spaces carrying this cargo shall be measured regularly, during voyage, and the results of the measurements shall be recorded and kept on board.

DISCHARGE

No special requirements.

CLEAN UP

No special requirements.

EMERGENCY PROCEDURES

SPECIAL EMERGENCY EQUIPMENT TO BE CARRIED Self-contained breathing apparatus.
EMERGENCY PROCEDURES Wear self-contained breathing apparatus. **EMERGENCY ACTION IN THE EVENT OF FIRE** Batten down and use CO_2 if available. Do not use water. **MEDICAL FIRST AID** Refer to Medical First Aid Guide (MFAG), as amended.

REMARKS
Material is virtually non-combustible when dry.

SODA ASH
(Dense and light)

DESCRIPTION
Powdery; composed of white, odourless grains and dust. It is made by the combustion of salt and limestone. Soluble in water. Soda ash is ruined on contact with oil.

CHARACTERISTICS

ANGLE OF REPOSE	BULK DENSITY (kg/m^3)	STOWAGE FACTOR (m^3/t)
Not applicable	599 to 1053	0.95 to 1.67
SIZE	**CLASS**	**GROUP**
Powdery	Not applicable	C

HAZARD
No special hazards. This cargo is non-combustible or has a low fire-risk.

STOWAGE & SEGREGATION
No special requirements.

HOLD CLEANLINESS
No special requirements.

WEATHER PRECAUTIONS
This cargo shall be kept as dry as practicable. This cargo shall not be handled during precipitation. During handling of this cargo all non-working hatches of the cargo spaces into which this cargo is loaded or to be loaded shall be closed.

LOADING
Trim in accordance with the relevant provisions required under sections 4 and 5 of the Code.

PRECAUTIONS
Appropriate precautions shall be taken to protect machinery and accommodation spaces from the dust of the cargo. Bilge wells of the cargo spaces shall be protected from ingress of the cargo. Due consideration shall be paid to protect equipment from the dust of the cargo. Persons, who may be exposed to the dust of the cargo, shall wear protective clothing, goggles or other equivalent dust eye-protection and dust filter masks, as necessary.

VENTILATION
No special requirements.

CARRIAGE
No special requirements.

DISCHARGE
No special requirements.

CLEAN UP

After discharge of this cargo, the cargo spaces shall be swept clean except in cases where the cargo to be loaded has the same BCSN of the cargo to be loaded subsequent to discharge is SODA ASH. The residues of this cargo may be pumped as slurry during washing out.

SODIUM NITRATE UN 1498

DESCRIPTION
Colourless, transparent, odourless crystals. Hygroscopic and soluble in water.

CHARACTERISTICS

ANGLE OF REPOSE	BULK DENSITY (kg/m^3)	STOWAGE FACTOR (m^3/t)
Not applicable	508 to 719	1.39 to 1.97
SIZE	**CLASS**	**GROUP**
Not applicable	5.1	B

HAZARD
Although non-combustible, mixtures with combustible material are readily ignited and may burn fiercely.
This cargo is hygroscopic and will cake if wet.

STOWAGE & SEGREGATION
"Separated from" foodstuffs.

HOLD CLEANLINESS
Clean and dry as relevant to the hazards of the cargo.

WEATHER PRECAUTIONS
This cargo shall be kept as dry as practicable. This cargo shall not be handled during precipitation. During handling of this cargo all non-working hatches of the cargo spaces into which this cargo is loaded or to be loaded shall be closed.

LOADING
Trim in accordance with the relevant provisions required under sections 4 and 5 of the Code.

PRECAUTIONS
Bilge wells shall be clean, dry and covered as appropriate, to prevent ingress of the cargo.

VENTILATION
The cargo spaces carrying this cargo shall not be ventilated during voyage.

CARRIAGE
No special requirements.

DISCHARGE
If this cargo has hardened, it shall be trimmed to avoid the formation of overhangs, as necessary.

CLEAN UP
No special requirements.

EMERGENCY PROCEDURES

SPECIAL EMERGENCY EQUIPMENT TO BE CARRIED

Protective clothing (gloves, boots, coveralls, headgear).
Self-contained breathing apparatus.
Spray nozzles.

EMERGENCY PROCEDURES

Wear protective clothing and self-contained breathing apparatus.

EMERGENCY ACTION IN THE EVENT OF FIRE

Use copious quantities of water, which is best applied in the form of a spray to avoid disturbing the surface of the material. The material may fuse or melt, in which condition application may result in extensive scattering of the molten material. Exclusion of air or the use of CO_2 will not control the fire. Due consideration should be given to the effect on the stability of the ship due to accumulated water.

MEDICAL FIRST AID

Refer to the Medical First Aid Guide (MFAG), as amended.

REMARKS
This material is non-combustible unless contaminated.

SODIUM NITRATE AND POTASSIUM NITRATE MIXTURE UN 1499

DESCRIPTION
A hygroscopic mixture, soluble in water.

CHARACTERISTICS

ANGLE OF REPOSE	BULK DENSITY (kg/m^3)	STOWAGE FACTOR (m^3/t)
30°	1136	0.88
SIZE	**CLASS**	**GROUP**
Not applicable	5.1	B

HAZARD
Although non-combustible, mixtures with combustible material may readily ignite and burn fiercely.
This cargo is hygroscopic and will cake if wet.

STOWAGE & SEGREGATION
"Separated from" foodstuffs.

HOLD CLEANLINESS
Clean and dry as relevant to the hazards of the cargo.

WEATHER PRECAUTIONS
This cargo shall be kept as dry as practicable. This cargo shall not be handled during precipitation. During handling of this cargo all non-working hatches of the cargo spaces into which this cargo is loaded or to be loaded shall be closed.

LOADING
Trim in accordance with the relevant provisions required under sections 4 and 5 of the Code.

PRECAUTIONS
Due regard shall be paid to prevent contact of the cargo and combustible materials.
Bilge wells shall be clean, dry and covered as appropriate, to prevent ingress of the cargo.

VENTILATION
The cargo spaces carrying this cargo shall not be ventilated during voyage.

CARRIAGE
No special requirements.

DISCHARGE
If this cargo has hardened, it shall be trimmed to avoid the formation of overhangs, as necessary.

CLEAN UP
No special requirements.

EMERGENCY PROCEDURES

SPECIAL EMERGENCY EQUIPMENT TO BE CARRIED Protective clothing (gloves, boots, coveralls, headgear). Self-contained breathing apparatus. Spray nozzles.
EMERGENCY PROCEDURES Wear protective clothing and self-contained breathing apparatus. **EMERGENCY ACTION IN THE EVENT OF FIRE** Use copious quantities of water, which is best applied in the form of a spray to avoid disturbing the surface of the material. The material may fuse or melt, in which condition application of water may result in extensive scattering of the molten materials. Exclusion of air or the use of CO_2 will not control the fire. Due consideration should be given to the effect on the stability of the ship due to the accumulated water. **MEDICAL FIRST AID** Refer to the Medical First Aid Guide (MFAG), as amended.

REMARKS
Material is non-combustible unless contaminated.

STAINLESS STEEL GRINDING DUST

DESCRIPTION
Brown lumps: Moisture content 1% to 3%. May give off dust.

CHARACTERISTICS

ANGLE OF REPOSE	BULK DENSITY (kg/m^3)	STOWAGE FACTOR (m^3/t)
Not applicable	2381	0.42
SIZE	**CLASS**	**GROUP**
Lumps: 75 mm to 380 mm	Not applicable	C

HAZARD
No special hazards. This cargo is non-combustible or has a low fire-risk.

STOWAGE & SEGREGATION
No special requirements.

HOLD CLEANLINESS
No special requirements.

WEATHER PRECAUTIONS
No special requirements.

LOADING
Trim in accordance with the relevant provisions required under sections 4 and 5 of the Code.

As the density of the cargo is extremely high, the tanktop may be overstressed unless the cargo is evenly spread across the tanktop to equalize the weight distribution. Due consideration shall be paid to ensure that tanktop is not overstressed during voyage and during loading by a pile of the cargo.

PRECAUTIONS
Appropriate precautions shall be taken to protect machinery and accommodation spaces from the dust of the cargo. Bilge wells of the cargo spaces shall be protected from ingress of the cargo. Due consideration shall be paid to protect equipment from the dust of the cargo. Persons, who may be exposed to the dust of the cargo, shall wear protective clothing, goggles or other equivalent dust eye-protection and dust filter masks, as necessary.

VENTILATION
No special requirements.

CARRIAGE
No special requirements.

DISCHARGE
No special requirements.

CLEAN UP
No special requirements.

STONE CHIPPINGS

DESCRIPTION

CHARACTERISTICS

ANGLE OF REPOSE	BULK DENSITY (kg/m^3)	STOWAGE FACTOR (m^3/t)
Not applicable	1408	0.71
SIZE	**CLASS**	**GROUP**
Fines to 25 mm	Not applicable	C

HAZARD
No special hazards.
This cargo is non-combustible or has a low fire-risk.

STOWAGE & SEGREGATION
No special requirements.

HOLD CLEANLINESS
No special requirements.

WEATHER PRECAUTIONS
No special requirements.

LOADING
Trim in accordance with the relevant provisions required under sections 4 and 5 of the Code.

PRECAUTIONS
No special requirements.

VENTILATION
No special requirements.

CARRIAGE
No special requirements.

DISCHARGE
No special requirements.

CLEAN UP
No special requirements.

SUGAR

DESCRIPTION
Depending on type, sugar may be either brown or white granules, with a very low moisture content to the order of 0% to 0.05%.

CHARACTERISTICS

ANGLE OF REPOSE	BULK DENSITY (kg/m^3)	STOWAGE FACTOR (m^3/t)
Not applicable	625 to 1000	1.00 to 1.60
SIZE	**CLASS**	**GROUP**
Granules-up to 3 mm	Not applicable	C

HAZARD
As sugar dissolves in water, ingress of water may result in the creation of air pockets in the body of the cargo with the ship's motion. The hazards are then similar to the hazards presented by cargoes which may liquefy. In case of ingress of water into the holds, the risk to the stability of the ship through dissolution of sugar (formation of a liquid base and shifting of cargo), should be recognized. This cargo is highly soluble.

STOWAGE & SEGREGATION
No special requirements.

HOLD CLEANLINES
No special requirements.

WEATHER PRECAUTIONS
This cargo shall be kept as dry as practicable. This cargo shall not be handled during precipitation. During handling of this cargo all non-working hatches of the cargo spaces into which this cargo is loaded or to be loaded shall be closed.

LOADING
Trim in accordance with the relevant provisions required under sections 4 and 5 of the Code.

PRECAUTIONS
No special requirements.

VENTILATION
No special requirements.

CARRIAGE
After the completion of loading of this cargo, the hatches of the cargo spaces shall be sealed to prevent water ingress, as necessary.

DISCHARGE
No special requirements.

CLEAN UP
No special requirements.

SULPHATE OF POTASH AND MAGNESIUM

DESCRIPTION
Granular light brown material. Solution in water is almost neutral. May have a slight odour, depending on the process of manufacturer. Melting point: 72°C. Moisture: 0.02%.

CHARACTERISTICS

ANGLE OF REPOSE	BULK DENSITY (kg/m^3)	STOWAGE FACTOR (m^3/t)
Not applicable	1000 to 1124	0.89 to 1.00
SIZE	**CLASS**	**GROUP**
Not applicable	Not applicable	C

HAZARD
No special hazards. This cargo is highly soluble.
This cargo is non-combustible or has a low fire-risk.

STOWAGE & SEGREGATION
No special requirements.

HOLD CLEANLINESS
Clean and dry as relevant to the hazards of the cargo.

WEATHER PRECAUTIONS
This cargo shall be kept as dry as practicable. This cargo shall not be handled during precipitation. During handling of this cargo all non-working hatches of the cargo spaces into which this cargo is loaded or to be loaded shall be closed.

LOADING
The cargo shall be trimmed in accordance with the cargo information required by section 4 of this Code. If doubt exists, trim reasonably level to the boundaries of the cargo space so as to minimize the risk of shifting and to ensure that adequate stability will be maintained during the voyage.

PRECAUTIONS
No special requirements.

VENTILATION
No special requirements.

CARRIAGE
No special requirements.

DISCHARGE
No special requirements.

CLEAN UP
No special requirements.

SULPHUR UN 1350
(lump and coarse grained)

DESCRIPTION
A mineral substance found free in volcanic countries. Yellow in colour, brittle, insoluble in water, but readily fusible by heat. Sulphur is loaded in a damp or wet condition.

Note: Fine grained sulphur (flowers of sulphur) shall not be transported in bulk.

CHARACTERISTICS

ANGLE OF REPOSE	BULK DENSITY (kg/m^3)	STOWAGE FACTOR (m^3/t)
Not applicable	1053 to 1176	0.85 to 0.95
SIZE	**CLASS**	**GROUP**
Slate to 10 mm granules & prills to 5 mm	4.1	B

HAZARD
Flammability and dust explosion especially during loading and unloading and after discharge and cleaning.
This cargo may ignite readily.
This cargo is non-combustible or has a low fire-risk.

STOWAGE & SEGREGATION
"Separated from" foodstuffs.

HOLD CLEANLINESS
Clean and dry as relevant to the hazards of the cargo.
Must be thoroughly clean and washed with fresh water.

WEATHER PRECAUTIONS
No special requirements.

LOADING
Trim in accordance with the relevant provisions required under sections 4 and 5 of the Code.

PRECAUTIONS
When this cargo is involved in a fire, a toxic, very irritating and suffocating gas is evolved. This cargo forms explosive and sensitive mixtures with most oxidizing material. This cargo has a liability to dust explosion, which may occur especially after discharge and during cleaning. The hold trimming plates and tank tops of the cargo spaces for this cargo shall be limewashed or coated with paint to prevent corrosion. Upper sections shall have a sound coating of paint. Electrical circuits for the equipment in cargo spaces for this cargo which is unsuitable for use in an explosive atmosphere shall be isolated by removal of links in the system other than fuses. Due consideration shall be paid on the isolation of electrical circuits for the equipment in the adjacent spaces of the cargo spaces which is unsuitable for use in an explosive atmosphere. Any ventilators of the cargo spaces for this cargo shall be fitted with spark-arresting screens.

Fine grained sulphur (flowers of sulphur) **shall not** be transported in bulk.

VENTILATION
Surface ventilation only, either natural or mechanical, shall be conducted, as necessary, during the voyage for this cargo.

CARRIAGE
Bilges in the cargo spaces carrying this cargo shall be pumped regularly to prevent accumulation of water/acid solution.

DISCHARGE
No special requirements.

CLEAN UP
The cargo spaces and other structures which may have been in contact with this cargo or the dust shall not be swept. After discharge of this cargo, the cargo spaces, and other structures as necessary, shall be washed out with fresh water to remove all residues of this cargo. Then the cargo spaces shall be thoroughly dried. Wet dust or residues may form highly corrosive sulphurous acid, which is extremely dangerous to personnel and corrosive to steel. Persons involved in cleaning up shall be provided with protective clothing, goggles and facemasks to wear.

EMERGENCY PROCEDURES

SPECIAL EMERGENCY EQUIPMENT TO BE CARRIED Self-contained breathing apparatus.
EMERGENCY PROCEDURES Wear self-contained breathing apparatus. **EMERGENCY ACTION IN THE EVENT OF FIRE** Batten down; use ship's fixed fire-fighting installation if available. Exclusion of air may be sufficient to control the fire. **Do not use water**. **MEDICAL FIRST AID** Refer to the Medical First Aid (MFAG), as amended.

SUPERPHOSPHATE

DESCRIPTION
Greyish-white. Moisture: 0% to 7%. Hygroscopic.

CHARACTERISTICS

ANGLE OF REPOSE	BULK DENSITY (kg/m^3)	STOWAGE FACTOR (m^3/t)
30° to 40°	1000 to 1190	0.81 to 1.00
SIZE	**CLASS**	**GROUP**
Granular, fines and powder to 0.15 mm diameter	Not applicable	C

HAZARD
No special hazards. This cargo is non-combustible or has a low fire-risk.
This cargo is hygroscopic and will cake if wet.

STOWAGE & SEGREGATION
No special requirements.

HOLD CLEANLINESS
Clean and dry as relevant to the hazards of the cargo.

WEATHER PRECAUTIONS
This cargo shall be kept as dry as practicable. This cargo shall not be handled during precipitation. During handling of this cargo all non-working hatches of the cargo spaces into which this cargo is loaded or to be loaded shall be closed.

LOADING
Trim in accordance with the relevant provisions required under sections 4 and 5 of the Code.

PRECAUTIONS
The hold trimming plates and tank tops of the cargo spaces for this cargo shall be lime washed or coated with paint to prevent corrosion.

VENTILATION
The cargo spaces carrying this cargo shall not be ventilated during voyage.

CARRIAGE
Moisture from condensation, cargo heating or leaking hatchcovers may cause formation of phosphoric or phosphorous acid which may cause corrosion to steelwork. After the completion of loading of this cargo, the hatches of the cargo spaces shall be sealed, as necessary. This cargo will decompose burlap or canvas cloth covering bilge wells.

DISCHARGE
If this cargo has hardened, it shall be trimmed to avoid the formation of overhangs, as necessary.

CLEAN UP
After discharge of this cargo, particular attention shall be paid to bilge wells of the cargo spaces.

SUPERPHOSPHATE (triple, granular)

DESCRIPTION
Granular in form, dark grey colour and, depending on its source, can be dusty. Hygroscopic.

CHARACTERISTICS

ANGLE OF REPOSE	BULK DENSITY (kg/m^3)	STOWAGE FACTOR (m^3/t)
Not applicable	813 to 909	1.10 to 1.23
SIZE	**CLASS**	**GROUP**
2 mm to 4 mm	Not applicable	C

HAZARD
No special hazards.
This cargo is non-combustible or has a low fire-risk.
This cargo is hygroscopic and will cake if wet.

STOWAGE & SEGREGATION
No special requirements.

HOLD CLEANLINESS
Clean and dry as relevant to the hazards of the cargo.

WEATHER PRECAUTIONS
This cargo shall be kept as dry as practicable. This cargo shall not be handled during precipitation. During handling of this cargo all non-working hatches of the cargo spaces into which this cargo is loaded or to be loaded shall be closed.

LOADING
Trim in accordance with the relevant provisions required under sections 4 and 5 of the Code.

PRECAUTIONS
Hold trimming plates and tank tops should be lime washed to prevent corrosion.

VENTILATION
The cargo spaces carrying this cargo shall not be ventilated during voyage.

CARRIAGE
Moisture from condensation, cargo heating or leaking hatchcovers may cause formation of phosphoric or phosphorous acid which may cause corrosion to steelwork. After the completion of loading of this cargo, the hatches of the cargo spaces shall be sealed, as necessary. This cargo will decompose burlap or canvas cloth covering bilge wells.

DISCHARGE
If this cargo has hardened, it shall be trimmed to avoid the formation of overhangs, as necessary.

CLEAN UP
Pay particular attention to bilge wells.

TACONITE PELLETS

DESCRIPTION
Ore. Grey, round steel pellets. Moisture: 2%.

CHARACTERISTICS

ANGLE OF REPOSE	BULK DENSITY (kg/m^3)	STOWAGE FACTOR (m^3/t)
Not applicable	599 to 654	1.53 to 1.67
SIZE	**CLASS**	**GROUP**
Pellets to 15 mm diameter	Not applicable	C

HAZARD
No special hazards.
This cargo is non-combustible or has a low fire-risk.

STOWAGE & SEGREGATION
No special requirements.

HOLD CLEANLINESS
No special requirements.

WEATHER PRECAUTIONS
No special requirements.

LOADING
Trim in accordance with the relevant provisions required under sections 4 and 5 of the Code.

PRECAUTIONS
No special requirements.

VENTILATION
No special requirements.

CARRIAGE
No special requirements.

DISCHARGE
No special requirements.

CLEAN UP
No special requirements.

TALC

DESCRIPTION
Talc is an extremely soft, whitish, green or greyish natural hydrated magnesium silicate. It has a characteristic soapy, or greasy feel.

CHARACTERISTICS

ANGLE OF REPOSE	BULK DENSITY (kg/m^3)	STOWAGE FACTOR (m^3/t)
Not applicable	1370 to 1563	0.64 to 0.73
SIZE	**CLASS**	**GROUP**
Powdery to 100 mm lumps	Not applicable	C

HAZARD
No special hazards.
This cargo is non-combustible or has a low fire-risk.

STOWAGE & SEGREGATION
No special requirements.

HOLD CLEANLINESS
No special requirements.

WEATHER PRECAUTIONS
No special requirements.

LOADING
Trim in accordance with the relevant provisions required under sections 4 and 5 of the Code.

PRECAUTIONS
No special requirements.

VENTILATION
No special requirements.

CARRIAGE
No special requirements.

DISCHARGE
No special requirements.

CLEAN UP
No special requirements.

TANKAGE

DESCRIPTION
The dried sweeping of animal matter from slaughterhouse floors. Very dusty.

CHARACTERISTICS

ANGLE OF REPOSE	BULK DENSITY (kg/m^3)	STOWAGE FACTOR (m^3/t)
Not applicable	-	-
SIZE	**CLASS**	**GROUP**
Not applicable	MHB	B

HAZARD
Subject to spontaneous heating and possible ignition. Possibly infectious.

STOWAGE & SEGREGATION
Segregation as required for class 4.2 materials.
"Separated by a complete cargo space or hold from" foodstuffs.

HOLD CLEANLINESS
Clean and dry as relevant to the hazards of the cargo.

WEATHER PRECAUTIONS
No special requirements.

LOADING
Trim in accordance with the relevant provisions required under sections 4 and 5 of the Code.

PRECAUTIONS
Bilge wells shall be clean, dry and covered as appropriate, to prevent ingress of the cargo.
Do not load if the temperature is above 38°C.
Appropriate precautions shall be taken to protect machinery and accommodation spaces from the dust of the cargo. Bilge wells of the cargo spaces shall be protected from ingress of the cargo. Due consideration shall be paid to protect equipment from the dust of the cargo. Persons, who may be exposed to the dust of the cargo, shall wear goggles or other equivalent dust eye-protection and dust filter masks. Those persons shall wear protective clothing, as necessary.

VENTILATION
No special requirements.

CARRIAGE
The temperature of this cargo shall be measured daily during voyage. The results of measurements shall be recorded to check possible self-heating heating.

DISCHARGE
No special requirements.

CLEAN UP
No special requirements.

EMERGENCY PROCEDURES

SPECIAL EMERGENCY EQUIPMENT TO BE CARRIED Self-contained breathing apparatus.
EMERGENCY PROCEDURES Wear self-contained breathing apparatus. **EMERGENCY ACTION IN THE EVENT OF FIRE** Batten down; use ship's fixed fire-fighting installation. Use full protective clothing in case of fire situation. **MEDICAL FIRST AID** Refer to the Medical First Aid Guide (MFAG), as amended.

TAPIOCA

DESCRIPTION
Dry, dusty mixture of powder and granules.

CHARACTERISTICS

ANGLE OF REPOSE	BULK DENSITY (kg/m^3)	STOWAGE FACTOR (m^3/t)
32°	735	1.36
SIZE	**CLASS**	**GROUP**
Powder and granules	Not applicable	C

HAZARD
May heat spontaneously with oxygen depletion in the cargo space.
This cargo is non-combustible or has a low fire-risk.

STOWAGE & SEGREGATION
No special requirements.

HOLD CLEANLINESS
No special requirements.

WEATHER PRECAUTIONS
No special requirements.

LOADING
Trim in accordance with the relevant provisions required under sections 4 and 5 of the Code.

PRECAUTIONS
Appropriate precautions shall be taken to protect machinery and accommodation spaces from the dust of the cargo. Bilge wells of the cargo spaces shall be protected from ingress of the cargo. Due consideration shall be paid to protect equipment from the dust of the cargo. Persons, who may be exposed to the dust of the cargo, shall wear protective clothing, goggles or other equivalent dust eye-protection and dust filter masks, as necessary.

VENTILATION
The cargo spaces carrying this cargo shall not be ventilated during voyage.

CARRIAGE
No special requirements.

DISCHARGE
No special requirements.

CLEAN UP
No special requirements.

UREA

DESCRIPTION
White, granular, and odourless commodity. Moisture content is less than 1%. Hygroscopic.

CHARACTERISTICS

ANGLE OF REPOSE	BULK DENSITY (kg/m^3)	STOWAGE FACTOR (m^3/t)
28° to 45°	645 to 855	1.17 to 1.56
SIZE	**CLASS**	**GROUP**
1 mm to 4 mm	Not applicable	C

HAZARD
No special hazards.
This cargo is non-combustible or has a low fire-risk.
This cargo is hygroscopic and will cake if wet.
Urea (either pure or impure) may, in the presence of moisture, damage paintwork or corrode steel.

STOWAGE & SEGREGATION
No special requirements.

HOLD CLEANLINESS
No special requirements.

WEATHER PRECAUTIONS
This cargo shall be kept as dry as practicable. This cargo shall not be handled during precipitation. During handling of this cargo all non-working hatches of the cargo spaces into which this cargo is loaded or to be loaded shall be closed.

LOADING
Trim in accordance with the relevant provisions required under sections 4 and 5 of the Code.

PRECAUTION
No special requirements.

VENTILATION
The cargo spaces carrying this cargo shall not be ventilated during voyage.

CARRIAGE
No special requirements.

DISCHARGE
If this cargo has hardened, it shall be trimmed to avoid the formation of overhangs, as necessary.

CLEAN UP
After discharge of this cargo, the cargo spaces shall be swept, washed out and dried.

VANADIUM ORE

DESCRIPTION

CHARACTERISTICS

ANGLE OF REPOSE	BULK DENSITY (kg/m^3)	STOWAGE FACTOR (m^3/t)
Not applicable	1786	0.560
SIZE	**CLASS**	**GROUP**
Not applicable	MHB	B

HAZARD
Dust may be toxic.
This cargo is non-combustible or has a low fire-risk.

STOWAGE & SEGREGATION
Segregation as required for class 6.1 materials.
"Separated from" foodstuffs.

HOLD CLEANLINESS
No special requirements.

WEATHER PRECAUTIONS
No special requirements.

LOADING
Trim in accordance with the relevant provisions required under sections 4 and 5 of the Code.

PRECAUTIONS
Exposure of persons to dust should be minimized.
Appropriate precautions shall be taken to protect machinery and accommodation spaces from the dust of the cargo. Bilge wells of the cargo spaces shall be protected from ingress of the cargo. Due consideration shall be paid to protect equipment from the dust of the cargo. Persons, who may be exposed to the dust of the cargo, shall wear goggles or other equivalent dust eye-protection and dust filter masks. Those persons shall wear protective clothing, as necessary.

VENTILATION
No special requirements.

CARRIAGE
No special requirements.

DISCHARGE
No special requirements.

CLEAN UP
No special requirements.

EMERGENCY PROCEDURES

SPECIAL EMERGENCY EQUIPMENT TO BE CARRIED Self-contained breathing apparatus.
EMERGENCY PROCEDURES Wear self-contained breathing apparatus. **EMERGENCY ACTION IN THE EVENT OF FIRE** Batten down; use ship's fixed fire fighting installation, if fitted. Exclusion of air may be sufficient to control fire. **MEDICAL FIRST AID** Refer to the Medical First Aid Guide (MFAG), as amended.

VERMICULITE

DESCRIPTION
A mineral of the mica group. Grey. Average moisture: 6% to 10%. May give off dust.

CHARACTERISTICS

ANGLE OF REPOSE	BULK DENSITY (kg/m^3)	STOWAGE FACTOR (m^3/t)
Not applicable	730	1.37
SIZE	**CLASS**	**GROUP**
3 mm	Not applicable	C

HAZARD
No special hazards.

This cargo is non-combustible or has a low fire-risk.

STOWAGE & SEGREGATION
No special requirements.

HOLD CLEANLINESS
No special requirements.

WEATHER PRECAUTIONS
No special requirements.

LOADING
Trim in accordance with the relevant provisions required under sections 4 and 5 of the Code.

PRECAUTIONS
Appropriate precautions shall be taken to protect machinery and accommodation spaces from the dust of the cargo. Bilge wells of the cargo spaces shall be protected from ingress of the cargo. Due consideration shall be paid to protect equipment from the dust of the cargo. Persons, who may be exposed to the dust of the cargo, shall wear protective clothing, goggles or other equivalent dust eye-protection and dust filter masks, as necessary.
Prior to loading, a certificate based on test shall be provided by the manufacturer or shipper stating that the asbestos content is less than 1%.

VENTILATION
No special requirements.

CARRIAGE
No special requirements.

DISCHARGE
No special requirements.

CLEAN UP
No special requirements.

WHITE QUARTZ

DESCRIPTION
99.6% silica content.

CHARACTERISTICS

ANGLE OF REPOSE	BULK DENSITY (kg/m^3)	STOWAGE FACTOR (m^3/t)
Not applicable	1639	0.61
SIZE	**CLASS**	**GROUP**
Lumps to 150 mm	Not applicable	C

HAZARD
No special hazards.
This cargo is non-combustible or has a low fire-risk.

STOWAGE & SEGREGATION
No special requirements.

HOLD CLEANLINESS
No special requirements.

WEATHER PRECAUTIONS
No special requirements.

LOADING
Trim in accordance with the relevant provisions required under sections 4 and 5 of the Code.

PRECAUTIONS
No special requirements.

VENTILATION
No special requirements.

CARRIAGE
No special requirements.

DISCHARGE
No special requirements.

CLEAN UP
No special requirements.

WOODCHIPS

DESCRIPTION
Natural timber mechanically chipped into the approximate size of a business card.

CHARACTERISTICS

ANGLE OF REPOSE	BULK DENSITY (kg/m^3)	STOWAGE FACTOR (m^3/t)
Not applicable	326	3.07
SIZE	**CLASS**	**GROUP**
As above	MHB	B

HAZARD
This material possesses a chemical hazard. Some shipments may be subject to oxidation leading to depletion of oxygen and increase of carbon dioxide in cargo and adjacent spaces.
With moisture content of 15% or more this cargo has a low fire-risk. As the moisture content decreases the fire risk increases. When dry, woodchips can be easily ignited by external sources; are readily combustible and can ignite by friction.

STOWAGE & SEGREGATION
Segregation as for class 4.1 materials.

HOLD CLEANLINESS
No special requirements.

WEATHER PRECAUTIONS
No special requirements.

LOADING
Trim in accordance with the relevant provisions required under sections 4 and 5 of the Code.

PRECAUTIONS
Entry of personnel into the cargo spaces containing this cargo shall not be permitted until tests have been carried out and it has been established that the oxygen content has been restored to a normal level. In dry weather, dust, which settles on deck, will dry out quickly and becomes readily ignitable. Appropriate precautions shall be taken to prevent fire.

VENTILATION
No special requirements.

CARRIAGE
No special requirements.

DISCHARGE
No special requirements.

CLEAN UP
No special requirements.

EMERGENCY PROCEDURES

SPECIAL EMERGENCY EQUIPMENT TO BE CARRIED Nil
EMERGENCY PROCEDURES Nil **EMERGENCY ACTION IN THE EVENT OF FIRE** Batten down; use ship's fixed fire-fighting installation if fitted. Exclusion of air may be sufficient to control fire. **MEDICAL FIRST AID** Refer to Medical First Aid Guide (MFAG), as amended.

WOOD PELLETS

DESCRIPTION

The Wood Pellets are light blond to chocolate brown in colour; very hard and cannot be easily squashed. Wood Pellets have a typical specific density between 1,100 to 1,700 kg/m^3 and a bulk density of 600 to 750 kg/m^3. Wood Pellets are made of sawdust, planer shavings and other wood waste such as bark coming out of the lumber manufacturing processes. Normally there are no additives or binders blended into the pellet, unless specified. The raw material is fragmented, dried and extruded into pellet form. The raw material is compressed approximately 3.5 times and the finished Wood Pellets typically have a moisture content of 4 to 8%. Wood Pellets are used as a fuel in district heating and electrical power generation as well as a fuel for small space heaters such as stoves and fireplaces.

Wood Pellets are also used as animal bedding due to the absorption characteristics. Such Wood Pellets typically have a moisture content of 8 to 10%.

CHARACTERISTICS

ANGLE OF REPOSE	BULK DENSITY (kg/m^3)	STOWAGE FACTOR (m^3/t)
Approximately 30 degrees	600 to 750	1.4 to 1.6
SIZE	**CLASS**	**GROUP**
Cylindrical with 3 to 12 mm Diameter: 10 to 20 mm	MHB	B

HAZARD

Shipments may be subject to oxidation leading to depletion of oxygen and increase of carbon monoxide and carbon dioxide in cargo and communicating spaces.

Swelling if exposed to moisture. Wood Pellets may ferment over time if moisture content is over 15% leading to generation of asphyxiating and flammable gases which may cause spontaneous combustion.

Handling of Wood Pellets may cause dust to develop. Risk of explosion at high dust concentration.

STOWAGE AND SEGREGATION

Segregate as for class 4.1 materials.

HOLD CLEANLINESS

Clean and dry as relevant to the hazards of the cargo.

WEATHER PRECAUTIONS

This cargo shall be kept as dry as practicable. This cargo shall not be handled during precipitation. During handling of this cargo all non-working hatches of the cargo spaces into which this cargo is loaded or to be loaded shall be closed.

LOADING
Trim in accordance with the relevant provisions required under sections 4 and 5 of the Code.

PRECAUTIONS
Entry of personnel into the cargo spaces containing this cargo or the connecting spaces shall not be permitted until tests have been carried out and it has been established that the oxygen content has been restored to a normal level. The close or direct contact of this cargo and cargo hold lighting such as hot halogen lamps shall be avoided. Fuses to such lights shall be removed or secured while this cargo is present in the cargo space. Precautions shall be taken to prevent generation of high concentrations of dust during handling and cleaning of this cargo.

VENTILATION
The cargo spaces carrying this cargo shall not be ventilated during voyage.

CARRIAGE
Hatches of the cargo spaces carrying this cargo shall be weathertight to prevent the ingress of water.

DISCHARGE
No special requirements.

CLEAN UP
No special requirements.

EMERGENCY PROCEDURES

SPECIAL EMERGENCY EQUIPMENT TO BE CARRIED Oxygen or combined carbon monoxide/dioxide meter when entering confined spaces, which has not been properly ventilated.
EMERGENCY PROCEDURES Nil **EMERGENCY ACTION IN THE EVENT OF FIRE** Batten down; use ship's fixed fire-fighting installation. Exclusion of air may be sufficient to control fire. Extinguish fire with carbon dioxide, foam or water. **MEDICAL FIRST AID** Refer to the Medical First Aid Guide (MFAG), as amended.

WOOD PULP PELLETS

DESCRIPTION
The pellets are brown in colour; very hard and cannot be easily squashed. They are light and are about half the size of a bottle cork. The pellets are made of compacted woodchips.

CHARACTERISTICS

ANGLE OF REPOSE	BULK DENSITY (kg/m^3)	STOWAGE FACTOR (m^3/t)
Not applicable	326	3.07
SIZE	**CLASS**	**GROUP**
approx. 15 mm x 20 mm	MHB	B

HAZARD
This cargo possesses a chemical hazard. Some shipments may be subject to oxidation leading to depletion of oxygen and increase of carbon dioxide in cargo and adjacent spaces.
With moisture content of 15% or more this cargo has a low fire-risk. As the moisture content decreases, the fire risk increases.

STOWAGE & SEGREGATION
Segregate as for class 4.1 materials.

HOLD CLEANLINESS
Clean and dry as relevant to the hazards of the cargo.

WEATHER PRECAUTIONS
No special requirements.

LOADING
Trim in accordance with the relevant provisions required under sections 4 and 5 of the Code.

PRECAUTIONS
Entry of personnel into the cargo spaces containing this cargo shall not be permitted until tests have been carried out and it has been established that the oxygen content has been restored to a normal level. In dry weather, dust, which settles on deck, will dry out quickly and becomes readily ignitable. Appropriate precautions shall be taken to prevent fire.

VENTILATION
No special requirements.

CARRIAGE
No special requirements.

DISCHARGE
No special requirements.

CLEAN UP
No special requirements.

EMERGENCY PROCEDURES

SPECIAL EMERGENCY EQUIPMENT TO BE CARRIED Nil
EMERGENCY PROCEDURES Nil **EMERGENCY ACTION IN THE EVENT OF FIRE** Batten down; use ship's fixed fire-fighting installation if fitted. Exclusion of air may be sufficient to control fire. **MEDICAL FIRST AID** Refer to the Medical First Aid Guide (MFAG), as amended.

ZINC ASHES UN 1435

Shipments require the approval of the competent authority of the countries of shipment and the flag State of the ship.

DESCRIPTION

CHARACTERISTICS

ANGLE OF REPOSE	BULK DENSITY (kg/m^3)	STOWAGE FACTOR (m^3/t)
Not applicable	900	1.11
SIZE	**CLASS**	**GROUP**
Not applicable	4.3	B

HAZARD
In contact with moisture or water liable to give off hydrogen, a flammable gas, and toxic gases. This cargo is non-combustible or has a low fire-risk.

STOWAGE & SEGREGATION
"Separated from" foodstuffs and all class 8 liquids.

HOLD CLEANLINESS
Clean and dry as relevant to the hazards of the cargo.

WEATHER PRECAUTIONS
This cargo shall be kept as dry as practicable before loading, during loading and during voyage. This cargo shall not be loaded during precipitation. During loading of this cargo all non-working hatches of the cargo spaces to which this cargo are loaded or to be loaded shall be closed.

LOADING
Trim in accordance with the relevant provisions required under sections 4 and 5 of the Code.
This cargo shall not be accepted for loading when the cargo is damp or known to have been wetted.

PRECAUTIONS
Reject any damp material or any material which is known to have been wetted. Possible ignition sources, including hotwork, burning, smoking, electrical sparking, shall be eliminated in the vicinity of the cargo spaces containing this cargo during handling and carriage of this cargo.

VENTILATION
Continuous mechanical ventilation shall be conducted during the voyage for the cargo spaces carrying this cargo. If maintaining ventilation endangers the ship or the cargo, it may be interrupted unless there is a risk of explosion or other danger due to interruption of the ventilation. In any case mechanical ventilation shall be maintained for a reasonable period prior to discharge.

CARRIAGE
For quantitative measurements of hydrogen, a suitable detector shall be on board while this cargo is carried. The detector shall be of certified safe type for use in explosive atmosphere. The concentration of hydrogen in the cargo spaces carrying this cargo shall be measured regularly, during voyage, and the results of the measurements shall be recorded and kept on board.

DISCHARGE
No special requirements.

CLEAN UP
After discharge of this cargo, the cargo spaces shall be swept clean twice.
Water shall not be used for cleaning of the cargo space which has contained this cargo, because of danger of gas.

EMERGENCY PROCEDURES

SPECIAL EMERGENCY EQUIPMENT TO BE CARRIED Protective clothing (gloves, boots, coveralls, headgear). Self-contained breathing apparatus.
EMERGENCY PROCEDURES Wear protective clothing and self-contained breathing apparatus. **EMERGENCY ACTION IN THE EVENT OF FIRE** Batten down; use ship's fixed fire-fighting installation if available. **Do not use water.** **MEDICAL FIRST AID** Refer to the Medical First Aid Guide (MFAG), as amended.

ZIRCONSAND

DESCRIPTION
Usually fine white to yellow, very abrasive extracted from ilmenite sand. May be dusty. Shipped dry.

CHARACTERISTICS

ANGLE OF REPOSE	BULK DENSITY (kg/m^3)	STOWAGE FACTOR (m^3/t)
Not applicable	2600 to 3000	0.33 to 0.36
SIZE	**CLASS**	**GROUP**
0.15 mm or less	Not applicable	C

HAZARD
No special hazard.
This cargo is non-combustible or has a low fire-risk.

STOWAGE & SEGREGATION
No special requirements.

HOLD CLEANLINESS
No special requirements.

WEATHER PRECAUTIONS
This cargo shall be kept as dry as practicable before loading, during loading and during voyage. This cargo shall not be loaded during precipitation. During loading of this cargo all non-working hatches of the cargo spaces to which this cargo are loaded or to be loaded shall be closed.

LOADING
Trim in accordance with the relevant provisions required under sections 4 and 5 of the Code.

As the density of the cargo is extremely high, the tanktop may be overstressed unless the cargo is evenly spread across the tanktop to equalize the weight distribution. Due consideration shall be paid to ensure that tanktop is not overstressed during voyage and during loading by a pile of the cargo.

PRECAUTIONS
Bilge wells shall be clean, dry and covered as appropriate, to prevent ingress of the cargo.
Appropriate precautions shall be taken to protect machinery and accommodation spaces from the dust of the cargo. Bilge wells of the cargo spaces shall be protected from ingress of the cargo. Due consideration shall be paid to protect equipment from the dust of the cargo. Persons, who may be exposed to the dust of the cargo, shall wear goggles or other equivalent dust eye-protection and dust filter masks. Those persons shall wear protective clothing, as necessary.

VENTILATION
No special requirements.

CARRIAGE
No special requirements.

DISCHARGE
No special requirements.

CLEAN UP
No special requirements.

APPENDIX 2

LABORATORY TEST PROCEDURES, ASSOCIATED APPARATUS AND STANDARDS

1 Test procedures for materials which may liquefy and associated apparatus

Three methods of testing for the Transportable moisture limit are currently in general use:

.1 flow table test;

.2 penetration test;

.3 Proctor/Fagerberg test.

As each method has its advantages, the selection of the test method should be determined by local practices or by the appropriate authorities.

1.1 *Flow table test procedure*

1.1.1 *Scope*

The flow table is generally suitable for mineral concentrates or other fine material with a maximum grain size of 1 mm. It may also be applicable to materials with a maximum grain size up to 7 mm. It will not be suitable for materials coarser than this and may also not give satisfactory results for some materials with high clay content. If the flow table test is not suitable for the material in question, the procedures to be adopted should be those approved by the authority of the port State.

The test described below provides for determination of:

.1 the moisture content of a sample of cargo, hereinafter referred to as the test material;

.2 the flow moisture point (FMP) of the test material under impact or cyclic forces of the flow table apparatus; and

.3 the transportable moisture limit of the test material.

1.1.2 *Apparatus (see figure 1.1.2)*

.1 Standard flow table and frame (ASTM Designation (C230-68) – see 3).

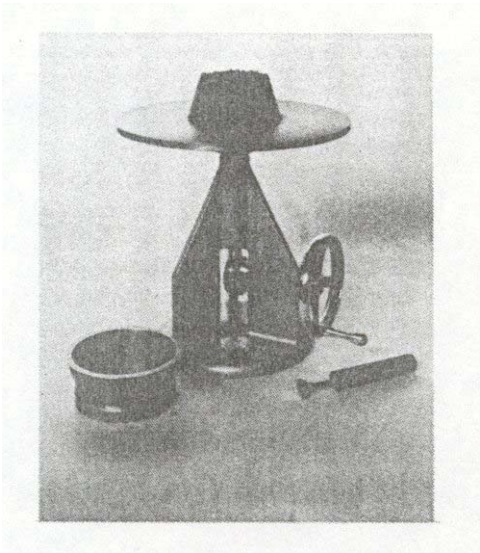

Figure 1.1.2 ***Flow table and accessory apparatus***

.2 Flow table mounting (ASTM Designation (C230-68) – see 3).

.3 Mould (ASTM Designation (C230-68) – see 3).

.4 Tamper (see figure 1.1.2.4): the required tamping pressure may be achieved by using calibrated, spring-loaded tampers (examples are included in figure 1.1.2.4) or some other suitable design of tamper that allows a controlled pressure to be applied via a 30 mm diameter tamper head.

.5 Scales and weights (ASTM Designation (C109-73) – see 3) and suitable sample containers.

.6 Glass graduated measuring cylinder and burette having capacities of 100-200 m*l* and 10 m*l*, respectively.

.7 A hemispherical mixing bowl approximately 30 cm diameter, rubber gloves and drying dishes or pans. Alternatively, an automatic mixer of similar capacity can be used for the mixing operations. In this case, care should be exercised to ensure that the use of such a mechanical mixer does not reduce the particle size or consistency of the test material.

.8 A drying oven with controlled temperature up to approximately 110°C. This oven should be without air circulation.

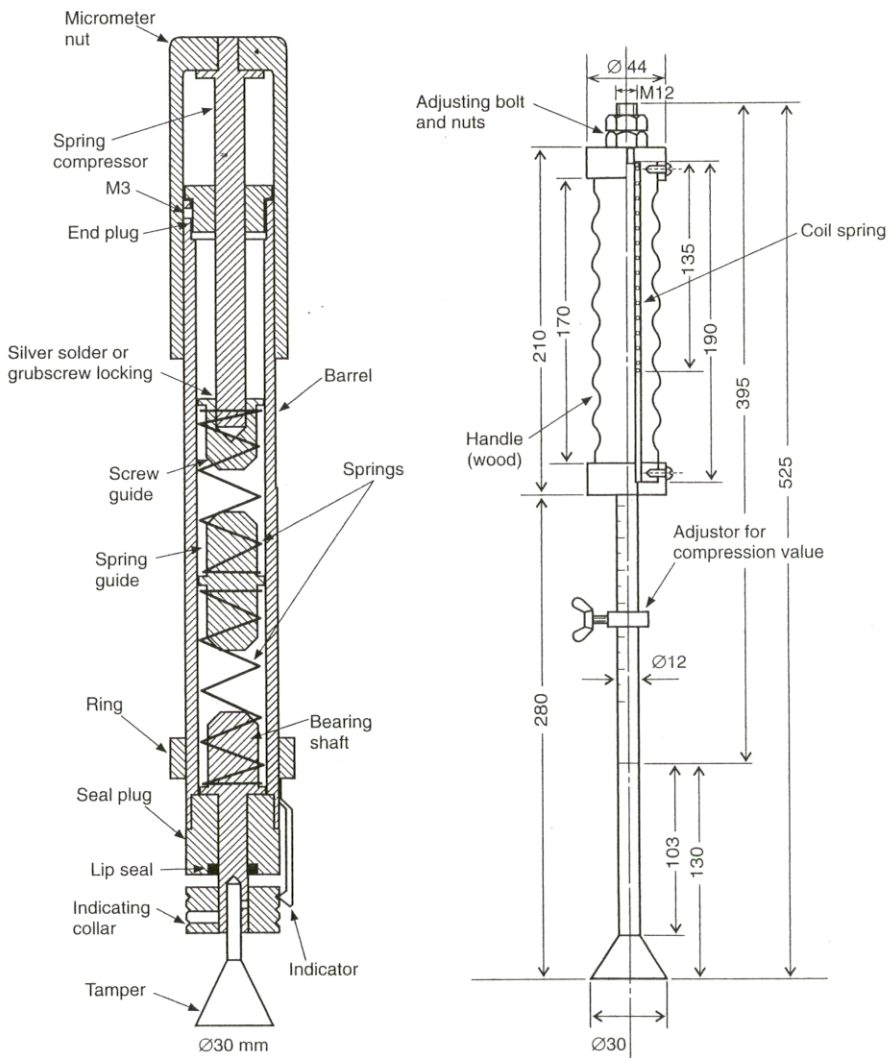

Figure 1.1.2.4 ***Examples of spring-loaded tampers***

1.1.3 *Temperature and humidity*

It is preferable to work in a room where the samples will be protected from excessive temperatures, air currents and humidity variations. All phases of the material preparation and testing procedure should be accomplished in a reasonable space of time to minimize moisture losses and, in any event, within the day of commencement. Where possible, sample containers should be covered with plastic film or other suitable cover.

1.1.4 *Procedure*

The quantity of material required for a flow moisture test will vary according to the specific gravity of the material to be tested. It will range from approximately 2 kg for coal to 3 kg for mineral concentrates. It should be collected as a representative sample of the cargo being shipped. Experience has shown that more accurate test results will be obtained by ensuring that the moisture content of the test sample is increased rather than decreased towards the FMP.

Consequently, it is recommended that a preliminary flow moisture test should be conducted, generally in accordance with the following, to indicate the condition of the test sample, i.e., the quantity of water and the rate at which it is to be added or whether the sample should be air-dried to reduce its moisture content before commencing the main flow moisture test.

1.1.4.1 Preparation of the test sample

The representative sample of test material is placed in the mixing bowl and thoroughly mixed. Three subsamples (A), (B) and (C) are removed from the mixing bowl as follows: about one fifth of the sample (A) should be immediately weighed and placed in the drying oven to determine the moisture content of the sample "as received". Two further subsamples, each of about two fifths of the gross weight, should then be taken, one (B) for the preliminary FMP test and the other (C) for the main FMP determination:

.1 *Filling the mould*. The mould is placed on the centre of the flow table and filled in three stages with the material from the mixing bowl. The first charge, after tamping, should aim to fill the mould to approximately one third of its depth. The quantity of sample required to achieve this will vary from one material to another, but can readily be established after some experience has been gained of the packing characteristics of the material being tested.

The second charge, after tamping, should fill the mould to about two thirds of its depth and the third and final charge, after tamping, should reach to just below the top of the mould (see figure 1.1.4.2).

.2 *Tamping procedure*. The aim of tamping is to attain a degree of compaction similar to that prevailing at the bottom of a shipboard cargo of the material being tested. The correct pressure to be applied is calculated from:

Tamping pressure (Pa) = Bulk density of cargo (kg/m^3)
x Maximum depth of cargo (m)
x Gravity acceleration (m/s^2)

Bulk density can be measured by a single test, using the Proctor C apparatus described in ASTM Standard D-698 or JIS-A-1210, on a sample of the cargo at the proposed moisture content of loading.

When calculating the tamping pressure, if no information concerning cargo depth is available the maximum likely depth should be used.

Alternatively, the pressure may be estimated from table 1.1.4.1.

The number of tamping actions (applying the correct, steady pressure each time) should be about 35 for the bottom layer, 25 for the middle and 20 for the top layer, tamping successively over the area completely to the edges of the sample to achieve a uniformly flat surface for each layer.

.3 *Removal of the mould*. The mould is tapped on its side until it becomes loose, leaving the sample in the shape of a truncated cone on the table.

Table 1.1.4.1

Typical cargo	Bulk density (kg/m^3)	Maximum cargo depth			
		2 m	5 m	10 m	20 m
		← Tamper pressure (kPa) →			
Coal	1000	20 (1.4)	50 (3.5)	100 (7.1)	200 (14.1)
	2000	40 (2.8)	100 (7.1)	200 (14.1)	400 (28.3)
Metal ore	3000	60 (4.2)	150 (10.6)	300 (21.2)	600 (42.4)
Iron ore conc.	4000	80 (5.7)	200 (14.1)	400 (28.3)	800 (56.5)
Lead ore conc.	5000	100 (7.1)	250 (17.7)	500 (35.3)	1000 (70.7)
(values in parenthesis are equivalent kgf when applied via a 30 mm diameter tamper head)					

1.1.4.2 The preliminary flow moisture test:

.1 Immediately after removing the mould, the flow table is raised and dropped up to 50 times through a height of 12.5 mm at a rate of 25 times per minute. If the material is below the FMP, it usually crumbles and bumps off in fragments with successive drops of the table (see figure 1.1.4-3).

.2 At this stage, the flow table is stopped and the material returned to the mixing bowl, where 5-10 m*l* of water, or possibly more, is sprinkled over the surface and thoroughly mixed into the material, either with rubber-gloved fingers or an automatic mixer.

The mould is again filled and the flow table is operated as described in 1.1.4.2.1 for up to 50 drops. If a flow state is not developed, the process is repeated with further additions of water until a flow state has been reached.

.3 *Identification of a flow state*. The impacting action of the flow table causes the grains to rearrange themselves to produce compaction of the mass. As a result, the fixed volume of moisture contained in the material at any given level increases as a percentage of the total volume. A flow state is considered to have been reached when the moisture content and compaction of the sample produce a level of saturation such that plastic deformation occurs*. At this stage, the moulded sides of the sample may deform, giving a convex or concave profile (see figure 1.1.4-4).

* In certain conditions, the diameter of the cone may increase before the flow moisture point is reached, due to low friction between the grains rather than to plastic flow. This must not be mistaken for a flow state.

With repeated action of the flow table, the sample continues to slump and to flow outwards. In certain materials, cracks may also develop on the top surface. Cracking, with the appearance of free moisture, is not, however, an indication of development of a flow state. In most cases, measurement of the deformation is helpful in deciding whether or not plastic flow has occurred. A template which, for example, will indicate an increase in diameter of up to 3 mm in any part of the cone is a useful guide for this purpose. Some additional observations may be useful. For example: when the (increasing) moisture content is approaching the FMP, the sample cone begins to show a tendency to stick to the mould. Further, when the sample is pushed off the table, the sample may leave tracks (stripes) of moisture on the table. If such stripes are seen, the moisture content may be above the FMP: the absence of tracks (stripes) is not necessarily an indication of being below the FMP.

Measuring the diameter of the cone, at the base or at half height, will always be useful. By addition of water in increments of 0.4% to 0.5% and applying 25 drops of the flow table, the first diameter increase will generally be between 1 and 5 mm and after a further increment of water the base diameter will have expanded by between 5 and 10 mm.

.4 As an alternative to the procedure described above, for many concentrates a fast way of finding the approximate FMP is as follows:

When the moisture content is definitely beyond the FMP, measure the diameter after 25 drops, repeat the test after adding a further increment of water, measure the diameter and draw a diagram as illustrated in figure 1.1.4-1, showing increase in diameter plotted against moisture content. A straight line drawn through the two points will cross the moisture content axis close to the FMP.

Having completed the preliminary FMP test, the sample for the main test is adjusted to the required level of moisture content (about 1% to 2%) below the flow point.

1.1.4.3 Main flow moisture test

When a flow state has been reached in the preliminary test, the moisture content of sub-sample (C) is adjusted to about 1% to 2% less than the last value which did not cause flow in the preliminary test (this is suggested simply to avoid starting the main test too close to the FMP and then having to waste time air-drying it and starting again). The final test is then carried out on this adjusted sample in the same manner as for the preliminary test, but in this case with the addition of water in increments of no more than 0.5% of the mass of the test material (the lower the "preliminary" FMP, the smaller the increments should be). After each stage, the whole moulded sample should be placed in a container, weighed immediately and retained for moisture determination if required. This will be necessary if the sample flowed or if the next, slightly wetter, sample flows. If not required it may be returned to the mixing bowl.

When a flow state has been reached, the moisture content should be determined on two samples, one with moisture content just above the FMP and the other with moisture content just below the FMP. The difference between the two values should then be 0.5% or less, and the FMP is taken as the mean of these two values.

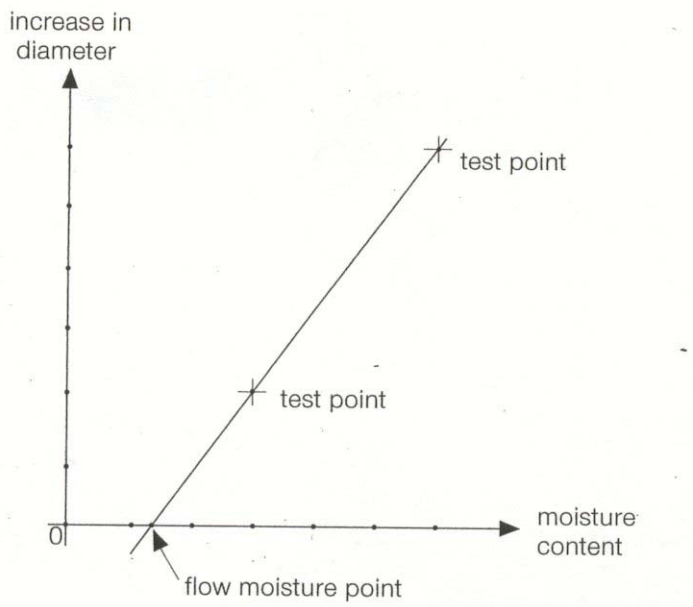

Figure 1.1.4-1

Figure 1.1.4-2

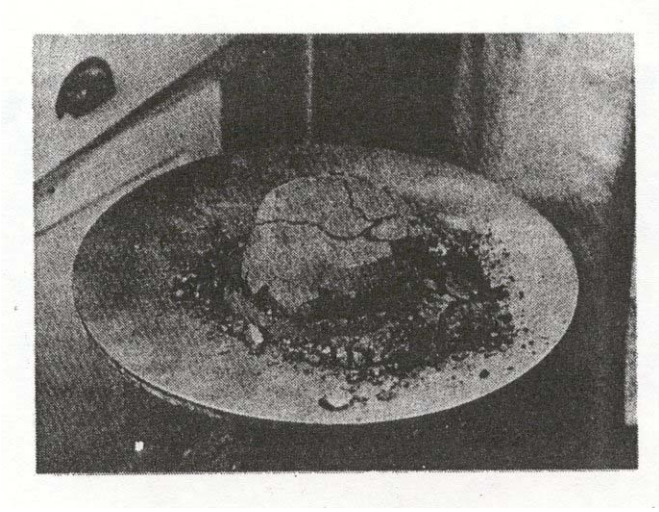

Figure 1.1.4-3

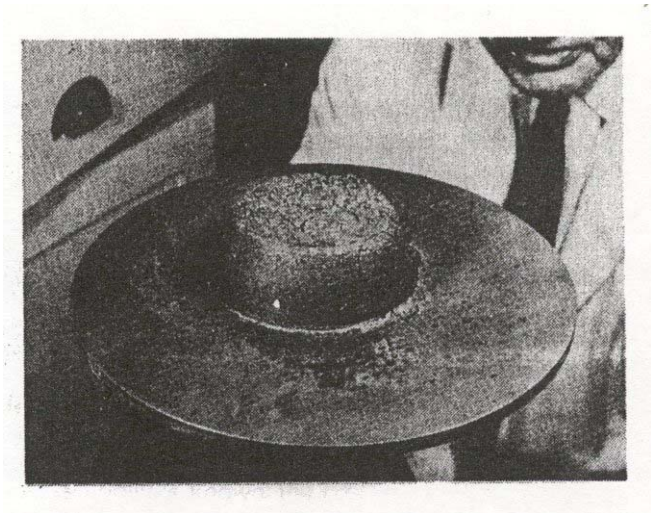

Figure 1.1.4-4

1.1.4.4 Determination of moisture content

Introduction

It should be noted that, for many materials, there are recognized international and national methods for determining moisture content. These methods, or ones that have been established to give equivalent results, should be followed.

Concentrates and similar materials

It is clearly important that the samples should be dried to a constant mass. In practice, this is ascertained after a suitable drying period at 105°C by weighing the sample successively with an interval of several hours elapsing. If the mass remains constant, drying has been completed, whereas if the mass is still decreasing, drying should be continued.

The length of the drying period depends upon many variables, such as the disposition of the material in the oven, the type of container used, the particle size, the rate of heat transfer, etc. It may be that a period of five hours is ample for one concentrate sample, whereas it is not sufficient for another. Sulphide concentrates tend to oxidize, and therefore the use of drying ovens with air circulation systems is not recommended for these materials, nor should the test sample be left in the drying oven for more than four hours.

Coal

The recommended methods for determination of the moisture content are those described in ISO 589-1974, "Hard Coal – Determination of Total Moisture". This method, or ones that have been established to give equivalent results, should be followed.

Calculation of moisture content, FMP and transportable moisture limit:

Taking m_1 as the exact mass of the subsample "as received" (see 1.1.4.1),

Taking m_2 as the exact mass of the "as received" subsample, after drying,

Taking m_3 as the exact mass of the sample just above the flow state (see 1.1.4.3),

Taking m_4 as the exact mass of the sample just above the flow state, after drying,

Taking m_5 as the exact mass of the sample just below the flow state (see 1.1.4.3),

Taking m_6 as the exact mass of the sample just below the flow state, after drying,

Then:

.1 The moisture content of the concentrate "as received" is:

$$\frac{(m_1 - m_2)}{m_1} \times 100, \textit{ in per cent} \qquad (1.1.4.4.1)$$

.2 The FMP of the material is:

$$\frac{\frac{(m_3 - m_4)}{m_3} + \frac{m_5 - m_6}{m_5}}{2} \times 100, \textit{ in per cent} \qquad (1.1.4.4.2)$$

.3 The transportable moisture limit of the material is 90% of the FMP.

Peat Moss

For all Peat Moss, determine the bulk density, using either the ASTM or CEN (20 litres) method.

Peat should be above or below 90kg/cubic metre on a dry weight basis in order to obtain the correct TML.

As indicated in 1.1.1, the following should be determined:

.1 the moisture content of a sample of cargo (MC);

.2 the flow moisture point (FMP);

.3 the transportable moisture limit (TML). The TML will be determined as follows:

.3.1 for peat with a bulk density of greater than 90 kg/cubic metre on a dry weight is 85% of the FMP; and

.3.2 for peat with a bulk density of 90 kg/cubic metre or less on a dry weight, the TML is 90% of the FMP.

1.2 *Penetration test procedure*

The penetration test constitutes a procedure whereby a material in a cylindrical vessel is vibrated. The flow moisture point is determined on the basis of the penetration depth of an indicator.

1.2.1 *Scope*

.1 The penetration test is generally suitable for mineral concentrates, similar materials, and coals up to a top size of 25 mm.

.2 In this procedure, the sample, in a cylindrical vessel, is subjected to vertical vibration of 2*g rms* ± 10% (*g* = gravity acceleration) for 6 minutes. When the penetration depth of a bit put on the surface exceeds 50 mm, it is judged that the sample contains a moisture greater than the flow moisture point.

.3 This procedure consists of a preliminary test to get an approximate value of the flow moisture point and a main test to determine the accurate flow moisture point. When the approximate value of the flow moisture point is known, the preliminary test can be omitted.

.4 The room where the samples are tested should be prepared as mentioned in 1.1.3.

1.2.2 *Apparatus (see figure 1.2.2)*

.1 The test apparatus consists of:

.1 a vibrating table;

.2 cylindrical vessels;

.3 indicators (penetration bits and a holder);

.4 a tamper (see 1.1.2.4); and

.5 ancillary equipment (see 1.1.2.5 to .8).

.2 The vibrator (see figure 1.2.2.2), with a table on which a cylindrical vessel can be clamped, should be capable of exciting a mass of 30 kg at a frequency of either 50 Hz or 60 Hz with an acceleration of 3*g* rms or more, and it can be controlled to adjust the acceleration level.

.3 Dimensions of cylindrical vessels (see figures 1.2.2.3-1 and 1.2.2.3-2) are as follows:

Cylinder size	Inner diameter	Depth	Wall thickness
small	146 mm	202 mm	9.6 mm or more
large	194 mm	252 mm	10.3 mm or more

The vessels should be made of reasonably rigid, non-magnetic, impermeable and lightweight material such as acrylics or vinyl chloride.

The small cylindrical vessel is selected for the materials having a maximum particle size of 10 mm or less. The large cylindrical vessel is for those having a maximum particle size of 25 mm or less.

.4 Penetration bits (see figure 1.2.2.4) are made of brass. The mass of the bit for coal should be adjusted to 88 g (5 kPa), and that for concentrates to 177 g (10 kPa). When the sample contains coarse particles, it is recommended that two bits of the same pressure are put on the surface to avoid misjudgment.

.5 A holder (see figure 1.2.2.5) should be made to guide the rod of a bit with minimum friction to the centre of a cylindrical vessel. When two bits are used, they should be positioned in accordance with figure 1.2.2.

.6 A cylindrical vessel and penetration indicators should be selected in accordance with the nature and condition of the test sample, viz. size of particles and bulk density.

1.2.3 *Procedure*

1.2.3.1 Preparation of the test sample and the vibrating table:

.1 The quantity of the sample required is approximately six times or more the capacity of the selected cylindrical vessel. The amount of representative test sample with which each container is filled should be as follows: approximately 1,700 cm^3 for the small container, and 4,700 cm^3 for the large container.

.2 Mix the sample well and divide into three approximately equal sub-samples, namely (A), (B) and (C). The sub-sample (A) should be immediately weighed and placed in the drying oven to determine the moisture content of the sample "as received".

The sub-samples (B) and (C) are used for the preliminary test and the main test, respectively.

.3 The vibration level of the vibrating table should be calibrated, using an acceleration meter, prior to carrying out testing. The acceleration of the table should be adjusted to 2*g* rms $\pm$ 10% with a container filled with a sample mounted on the table.

1.2.3.2 Preliminary flow moisture test

This test is intended to measure quickly the approximate flow moisture point, using sub-sample (B). Water is added in increments after every penetration test. When a flow state has been reached, the moisture content of the sample just above the flow state is measured. The moisture content of the sample just below the flow state can be calculated by deducting the increment of water last added from the gross mass of the sample.

.1 Fill the appropriate cylindrical vessel with sub-sample (B) in four distinct stages and tamp after the addition of each layer using a specified tamper. Tamp to a pressure denoted in 1.1.4.1 for mineral concentrates or to 40 kPa for coals, and apply the pressure evenly over the whole surface area of the material until a uniformly flat surface is obtained.

.2 Place the penetration bit on the surface of the material through the holder.

.3 Operate the vibrator at a frequency of 50 Hz or 60 Hz with an acceleration of 2*g* rms $\pm$ 10% for 6 minutes. If necessary, the acceleration level should be checked by referring to the output of the acceleration meter attached to the vibrating table.

.4 After 6 minutes of vibration, read the depth of penetration.

.5 When the depth of penetration is less than 50 mm, it is judged that liquefaction did not take place. Then:

.1 Remove the material from the cylindrical vessel and replace in the mixing bowl with the remainder of the sample.

.2 Mix well and weigh the contents of the mixing bowl.

.3 Sprinkle an increment of water of not more than 1% of the mass of the material in the bowl and mix well.

.4 Repeat the procedure described in 1.2.3.2.1 to 1.2.3.2.5.

.6 When the depth of penetration is greater than 50 mm, it is judged that liquefaction took place. Then:

.1 Remove the material from the cylindrical vessel and replace in the mixing bowl.

.2 Measure the moisture content in accordance with the procedure described in 1.1.4.4.

.3 Calculate the moisture content of the sample just below the flow moisture point on the basis of the amount of water added.

.7 If the penetration depth in the first attempt exceeds 50 mm, i.e., the sample as received liquefied, mix sub-samples (B) and (C) and dry at room temperature to reduce the moisture. Then, divide the material into two sub-samples (B) and (C), and repeat the preliminary test.

1.2.3.3 The main flow moisture test

.1 On the basis of the preliminary test, the main test should be carried out to determine the flow moisture point more accurately.

.2 Adjust the moisture content of the sub-sample (C) to the last value, which did not cause flow in the preliminary flow moisture test.

.3 The first test of the main flow moisture test is carried out on this adjusted sample in the same manner as described in 1.2.3.2. In this case, however, the addition of water in increments should not be more than 0.5% of the mass of the test material.

.4 When the approximate value of the flow moisture point is known in advance, the moisture content of the sub-sample (C) is adjusted to approximately 90% of this value.

.5 When a flow state has been reached, the flow moisture point is determined as described in 1.1.4.3.

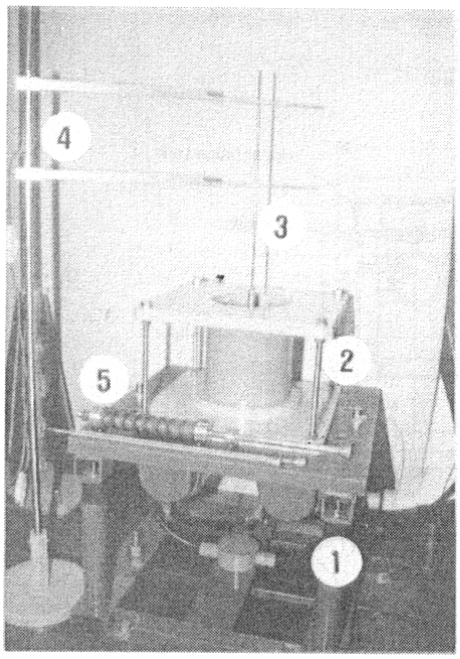

① Vibration table

② Cylindrical vessel (150 mm diameter)

③ Penetration bit (10 kPa)

④ Bit holder

⑤ Tamper

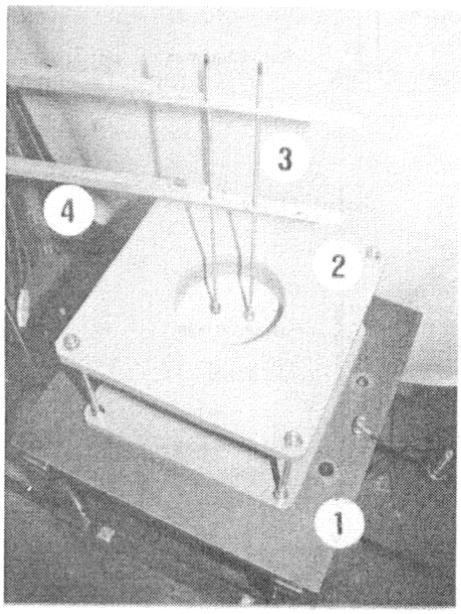

① Vibration table

② Cylindrical vessel (150 mm diameter)

③ Penetration bit (5 kPa)

④ Bit holder

97580

Figure 1.2.2 ***Test apparatus***

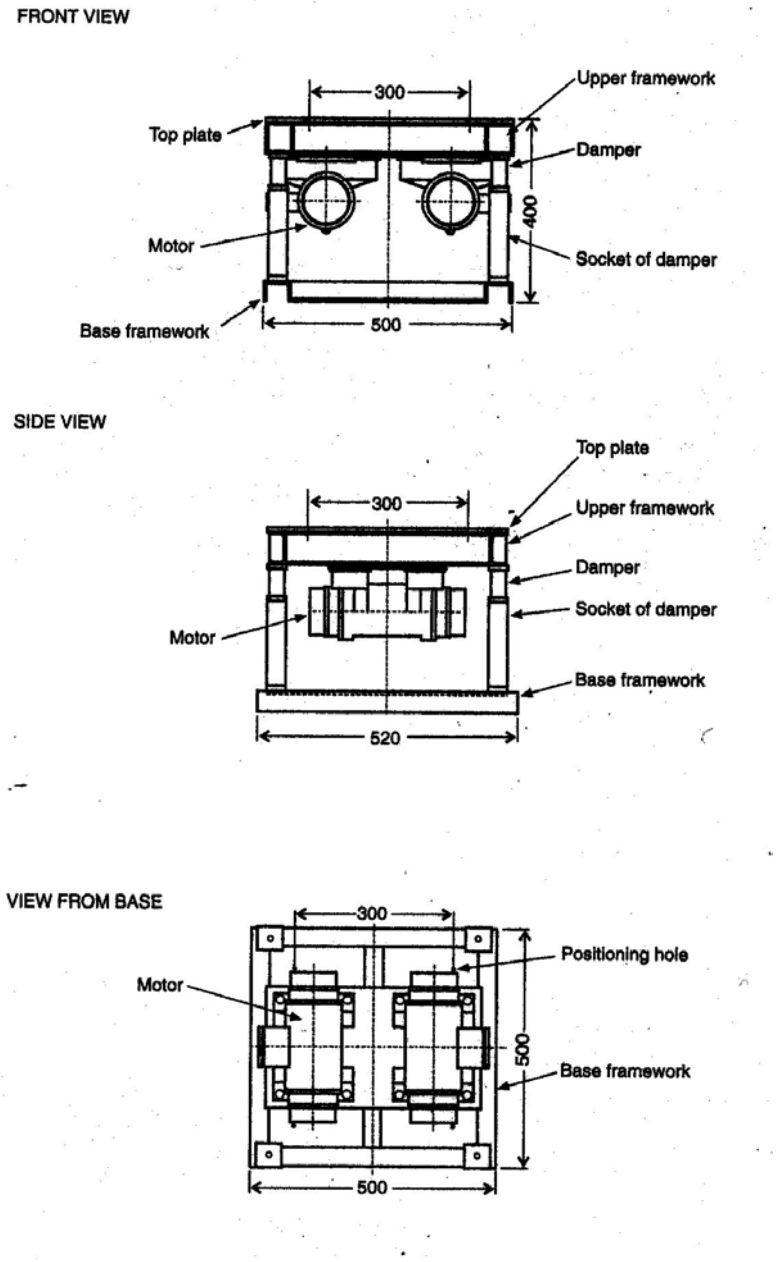

Figure 1.2.2.2 ***Vibration table***

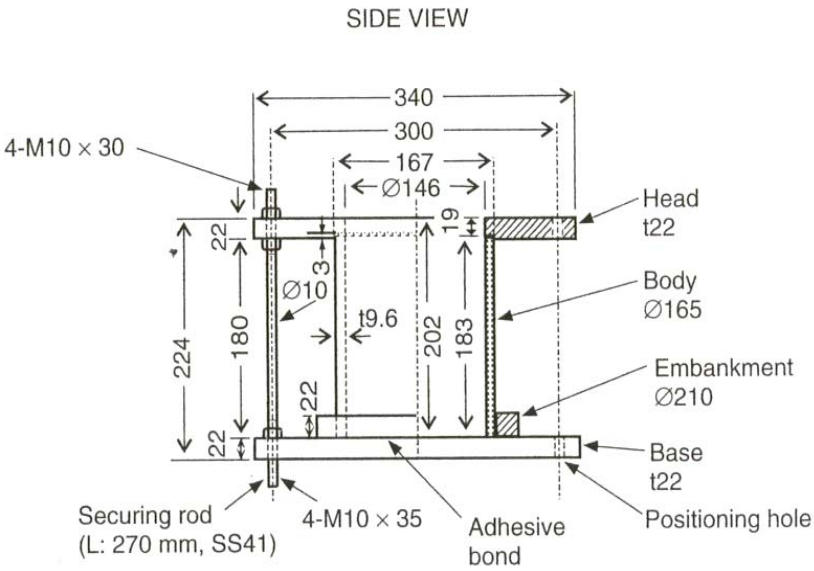

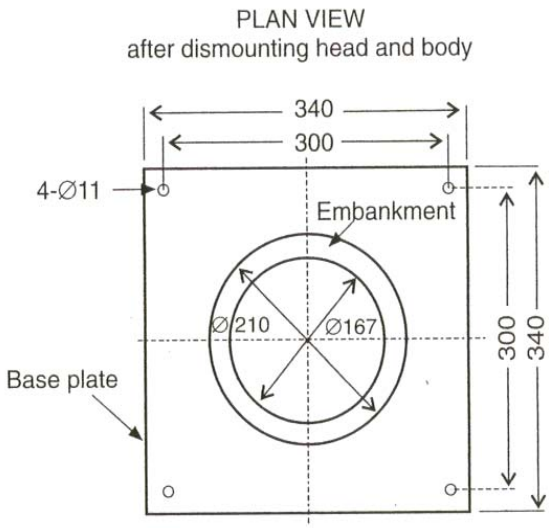

Figure 1.2.2.3-1 ***Cylindrical vessel, 150 mm diameter***

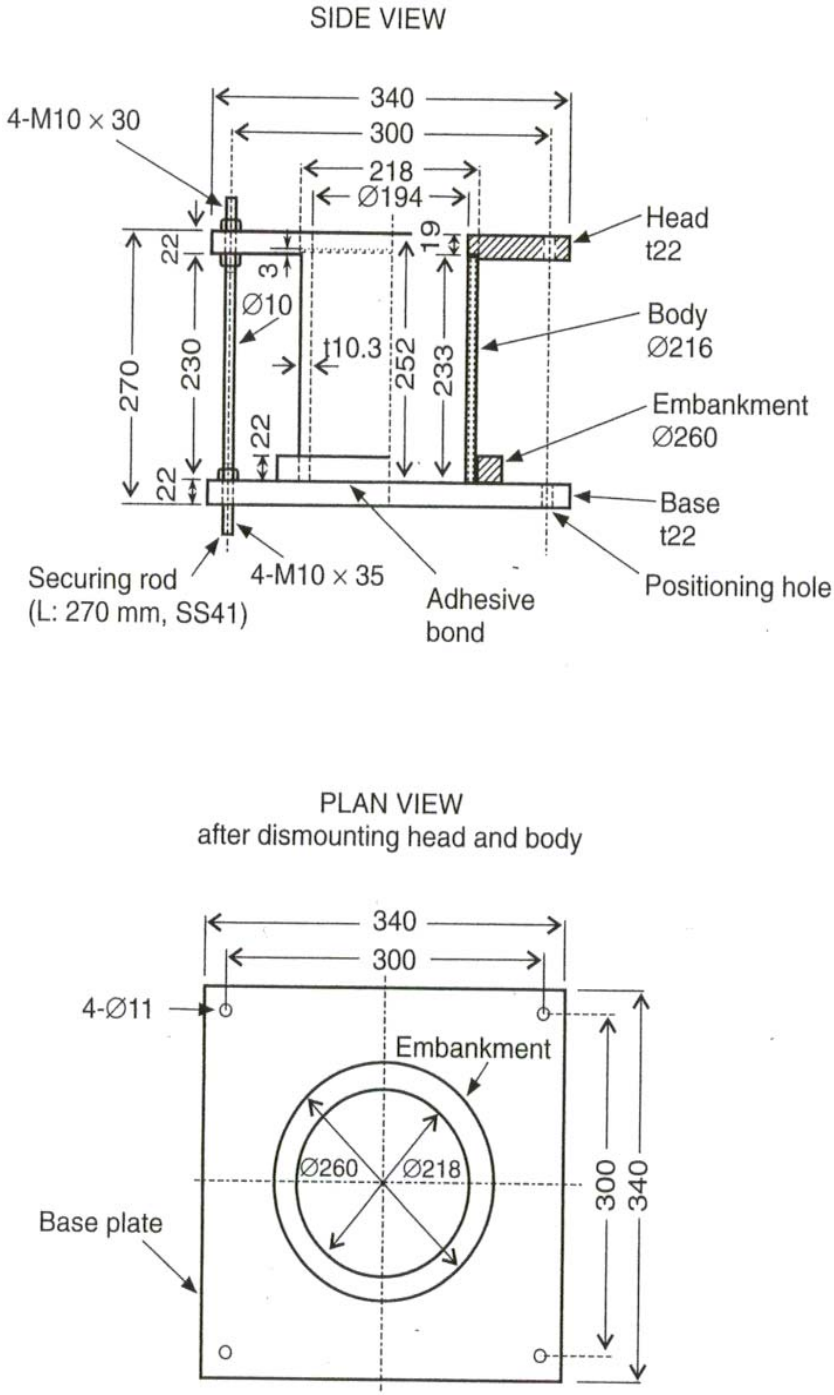

Figure 1.2.2.3-2 ***Cylindrical vessel, 200 mm diameter***

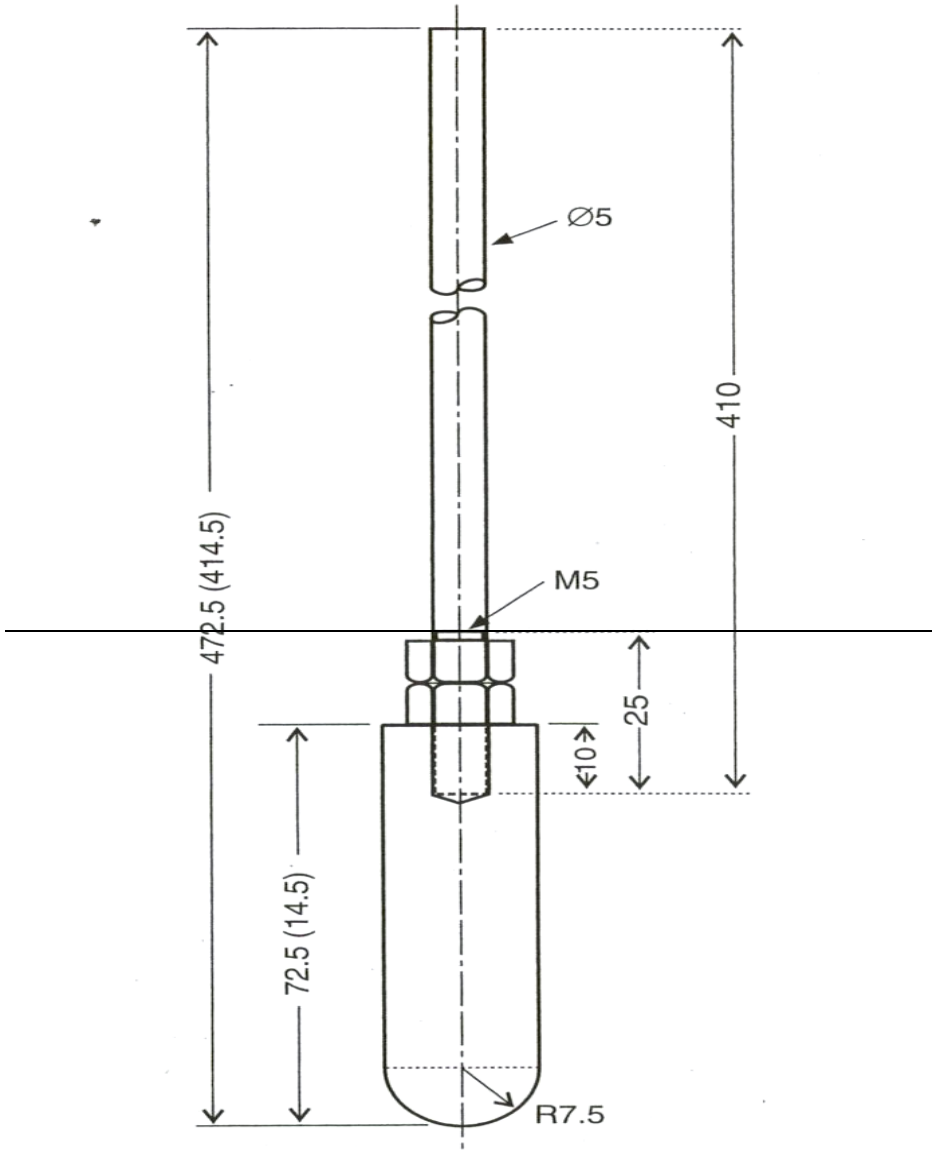

(Dimensions indicated in brackets are of the 5 kPa bit)
(unit: mm)

Figure 1.2.2.4 ***Penetration bit***

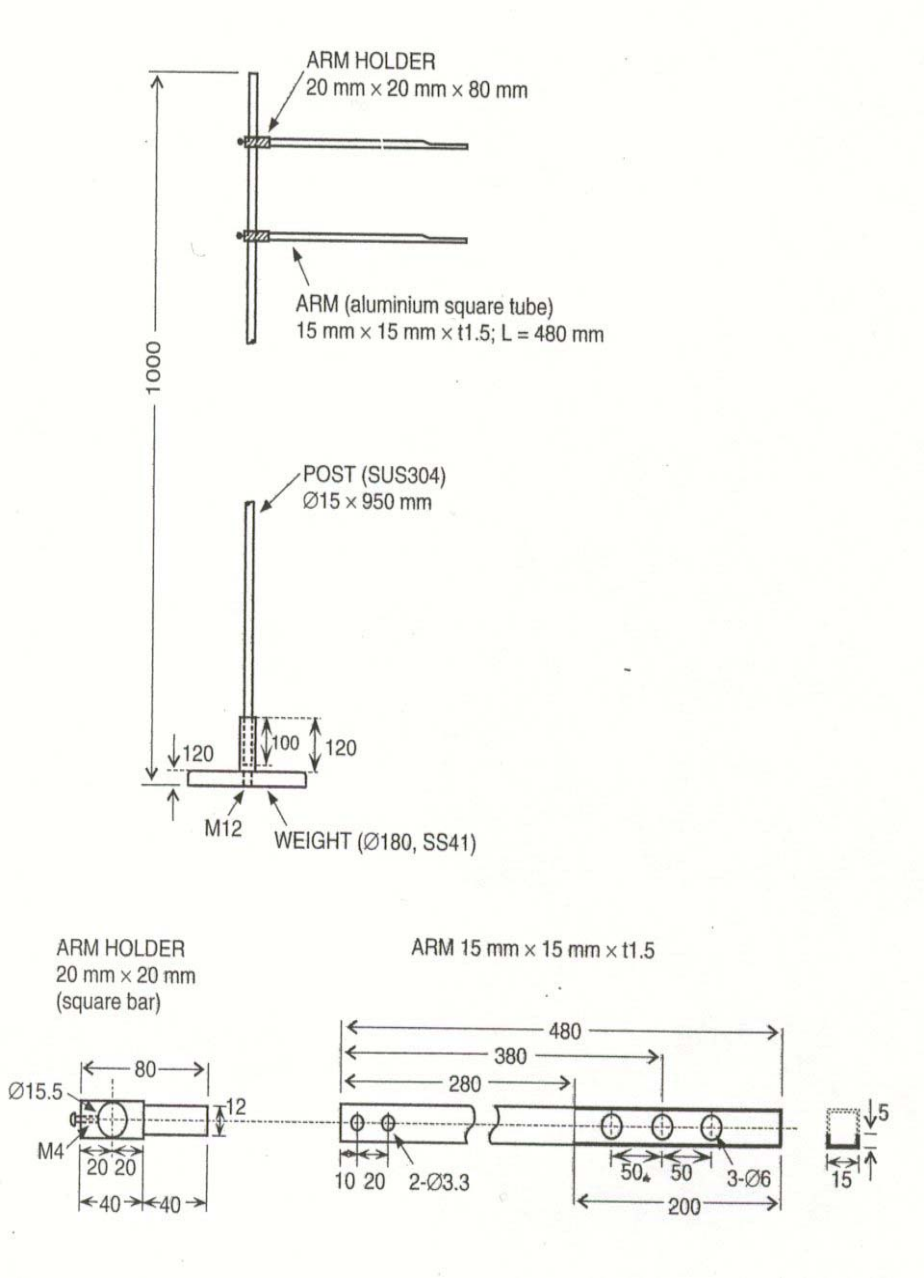

Figure 1.2.2.5 ***Bit holder***

1.3 *Proctor/Fagerberg test procedure*

1.3.1 *Scope*

.1 Test method for both fine and relatively coarse-grained ore concentrates or similar materials up to a top size of 5 mm. This method should not be used for coal or other porous materials.

.2 Before the Proctor/Fagerberg test is applied to coarser materials with a top size greater than 5 mm, an extensive investigation for adoption and improvement is required.

.3 The transportable moisture limit (TML) of a cargo is taken as equal to the critical moisture content at 70% degree of saturation according to the Proctor/Fagerberg method test.

1.3.2 *Proctor/Fagerberg test equipment*

.1 The Proctor apparatus (see figure 1.3.2) consists of a cylindrical iron mould with a removable extension piece (the compaction cylinder) and a compaction tool guided by a pipe open at its lower end (the compaction hammer).

.2 Scales and weights (see 3.2) and suitable sample containers.

.3 A drying oven with a controlled temperature interval from 100°C to maximum 105° C. This oven should be without air circulation.

.4 A suitable mixer. Care should be taken to ensure that the use of the mixer does not reduce the particle size or consistency of the test material.

.5 Equipment to determine the density of the solid material, for example a pycnometer.

1.3.3.3 Temperature and humidity (see 1.1.3)

1.3.4 *Procedure*

.1 *Establishment of a complete compaction curve*. A representative sample according to a relevant standard (see section 4.7, page 20) of the test material is dried at a temperature of approximately 100°C. The total quantity of the test material should be at least three times as big as required for the complete test sequence. Compaction tests are executed for five to ten different moisture contents (five to ten separate tests). The samples are adjusted in order that dry to almost saturated (plastic) samples are obtained. The required quantity per compaction test is about 2,000 cm^{3}.

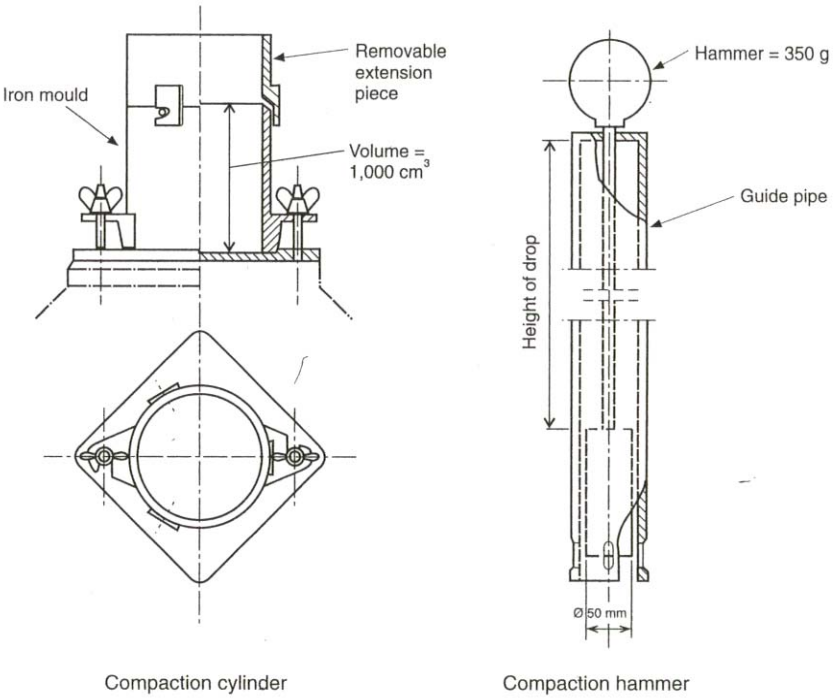

Figure 1.3.2 ***Proctor apparatus***

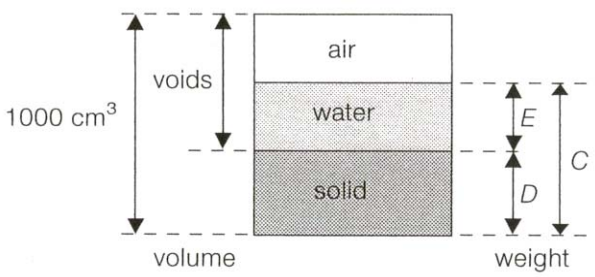

Figure 1.3.4.2

At each compaction test a suitable amount of water is added to the sample of the dried test material and mixed thoroughly for 5 minutes. Approximately one fifth of the mixed sample is filled into the mould and levelled and then the increment is tamped uniformly over the surface of the increment. Tamping is executed by dropping the hammer 25 times through the guide pipe, 0.2 m each time. The performance is repeated for all five layers. When the last layer has been tamped the extension piece is removed and the sample is levelled off along the brim of the mould. When the weight of the cylinder with the tamped sample has been determined, the cylinder is emptied, the sample is dried and the weight is determined.

The test then is repeated for the other samples with different moisture contents.

.2 *Definitions and data for calculations (see figure 1.3.4.2)*

- empty cylinder, mass in grams: A
- cylinder with tamped sample, mass in grams: B
- wet sample, mass in grams: C

$$C = B - A$$

- dry sample, mass in grams: D
- water, mass in grams (equivalent to volume in cm^3): E

$$E = C - D$$

Volume of cylinder: 1000 cm^3

.3 *Calculation of main characteristics*

- density of solid material, g/cm^3 (t/m^3): d
- dry bulk density, g/cm^3 (t/m^3): γ

$$\gamma = \frac{D}{1000}$$

- net water content, volume %: e_v

$$e_v = \frac{E}{D} \text{ x } 100 \text{ x } d$$

- void ratio: e (volume of voids divided by volume of solids)

$$e = \frac{1000 - D}{D} = \frac{d}{\lambda} = - 1$$

- degree of saturation, percentage by volume: S

$$S = \frac{e_v}{e}$$

- gross water content, percentage by mass: W^1

$$W^1 = \frac{E}{C} \times 100$$

- net water content, percentage by mass: W

$$W = \frac{E}{D} \times 100$$

.4 *Presentation of the compaction tests*

For each compaction test the calculated void ratio (e) value is plotted as the ordinate in a diagram with net water content (e_v) and degree of saturation (S) as the respective abscissa parameters.

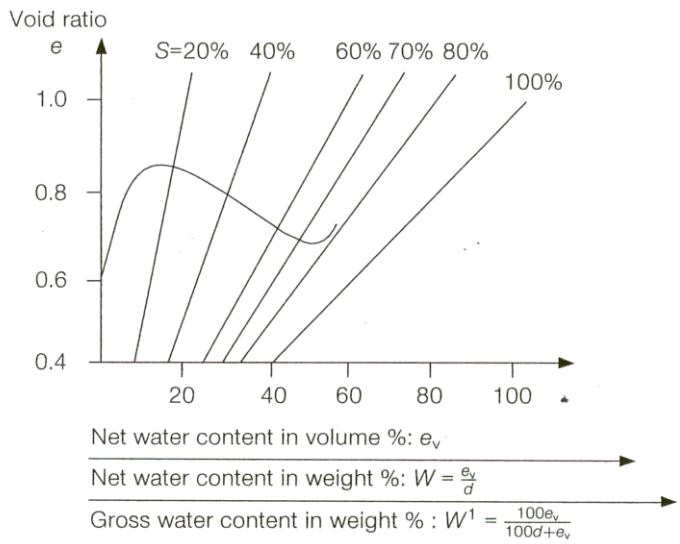

Figure 1.3.4.5

.5 *Compaction curve*

The test sequence results in a specific compaction curve (see figure 1.3.4.5).

The critical moisture content is indicated by the intersection of the compaction curve and the line S = 70% degree of saturation. The transportable moisture limit (TML) is the critical moisture content.

2 Test procedures to determine the angle of repose and associated apparatus

2.1 *Determination of angle of repose of fine-grained materials (size less than 10 mm)*: "*tilting box test*". *For use in laboratory or port of loading*

2.1.1 *Scope*

The test provides for the determination of the angle of repose of fine-grained non-cohesive materials (size less than 10 mm). The results so obtained may be used when interpreting sections 5 and 6 of this Code for the materials in question.

2.1.2 *Definition*

The angle of repose obtained by this test is the angle formed between the horizontal and the top of the testbox when the material in the box just begins to slide in bulk.

2.1.3 *Principle of test*

When measuring the angle of repose by this method, the material surface should initially be level and parallel to the testbox base. The box is tilted without vibration and tilted without vibration and tilting is stopped when the product just begins to slide in bulk.

2.1.4 *Apparatus (see figure 2.1.4)*

Apparatus is as follows:

.1 A framework, on top of which is attached an open box. Attachment of the box to the frame is by means of a shaft passing through bearings affixed to both the frame and the end of the box, enabling the box to be subjected to a controlled tilt.

.2 The dimensions of the box are 600 mm long, 400 mm wide and 200 mm high.

.3 To prevent sliding of the material along the bottom of the box during tilting, a tightly fitting grating (openings 30 mm x 30 mm x 25 mm) is placed on the bottom of the box before filling.

.4 Tilting of the box is effected by a hydraulic cylinder fitted between the frame and the bottom of the box. Other means may be used to obtain the required tilting but in all cases vibration must be eliminated.

.5 To pressurize the hydraulic cylinder, a hydropneumatic accumulator may be used, pressurized by air or gas at a pressure of about 5 kp/cm^2.

.6 The rate of tilting should be approximately 0.3^o/s.

.7 Range of tilt should be at least 50°.

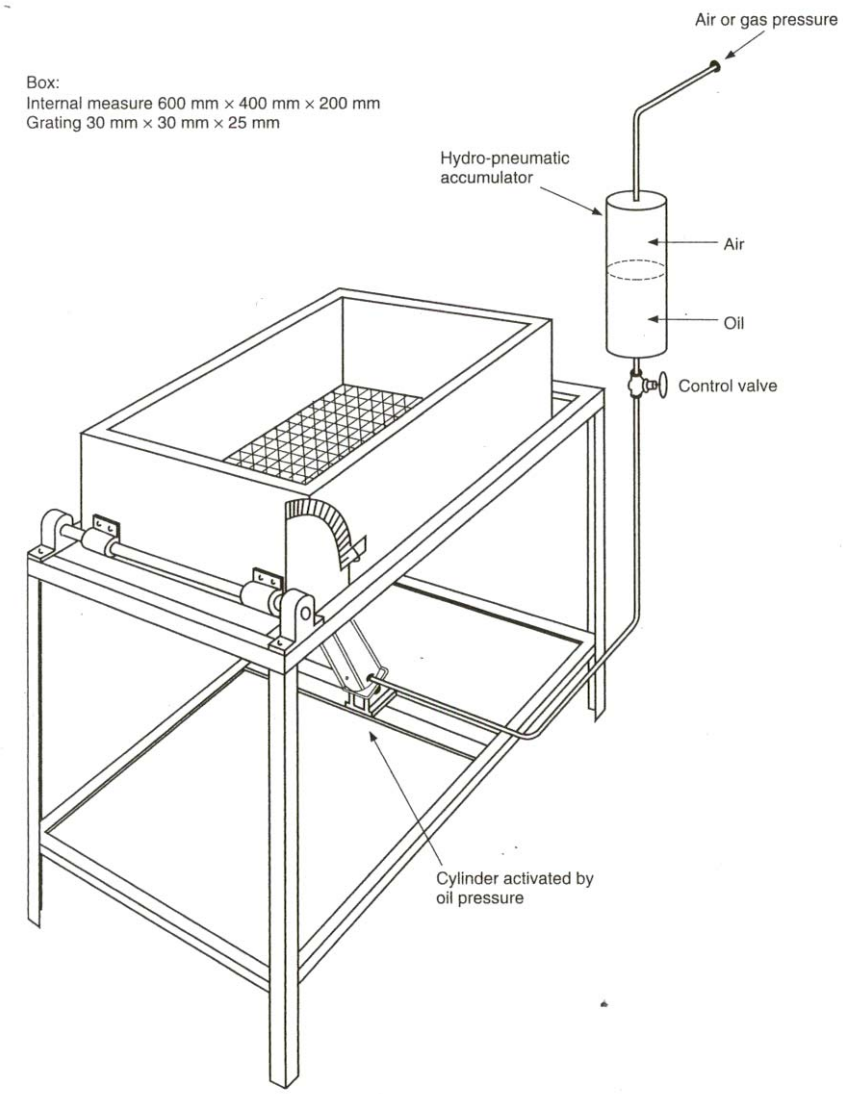

Figure 2.1.4 ***Basic sketch of tilting box***

.8 A protractor is fitted to the end of the shaft. One lever of the protractor is fitted so that it may be screw-adjusted to the horizontal.

.9 The protractor should measure the angle of the top of the box to the horizontal to within an accuracy of 0.5^{o}.

.10 A spirit level or some other levelling device should be available to zero the protractor.

2.1.5 *Procedure*

The box is filled with the material to be tested by pouring it slowly and carefully from the lowest practical height into the box in order to obtain uniformity of loading.

The excess material is scraped off with the aid of a straight edge, inclined at about 45° towards the direction of scraping.

The tilting system is then activated and stopped when the material just begins to slide in bulk.

The angle of the top of the box to the horizontal is measured by the protractor and recorded.

2.1.6 *Evaluation*

The angle of repose is calculated as the mean of three measurements and is reported to within half a degree.

Notes: Preferably the test should be carried out with three independent samples.

Care should be taken to ensure that the shaft is adjusted to be horizontal before testing.

2.2 *Alternative or shipboard test method to be used for the determination of the angle of repose when the tilting box is not available*

2.2.1 *Definition*

According to this method the angle of repose is the angle between the cone slope and the horizontal measured at half height.

2.2.2 *Principle of test*

To determine the angle of repose, a quantity of the material to be tested is poured very carefully out of a flask onto a sheet of rough-textured paper, in such a way that a symmetrical cone is formed.

2.2.3 *Equipment*

The necessary equipment to carry out this test is as follows:

- a horizontal table free from vibrations;
- a sheet of rough-textured paper onto which the material should be poured;
- a protractor; and
- a 3-litre conical flask.

2.2.4 *Procedure*

Put the sheet of paper on the table. Split 10*l* of the material to be tested into three sub-samples and test each in the following way:

Pour two thirds of the sub-sample (i.e., 2 *l*) onto the sheet, producing a starting cone. The remainder of this sub-sample is then poured very carefully from a height of a few millimetres on top of the cone. Care should be taken that the cone will be built up symmetrically. This may be achieved by revolving the flask slowly close around the top of the cone when pouring.

When measuring, care should be taken that the protractor does not touch the cone; otherwise this may result in sliding of the material and spoil the test.

The angle has to be measured at four places around the cone, about 90 degrees apart.

This test should be repeated on the other two sub-samples.

2.2.5 *Calculations*

The angle of repose is taken as the mean of the 12 measurements and is reported to half a degree. This figure can be converted to the tilting box value as follows:

$$a_t = a_s + 3^o \qquad (2.2.5)$$

Where a_t = angle of repose according to the tilting box text

a_s = angle of repose according to the survey test

3 Standards used in test procedures

3.1 *Standard flow table and frame*[*]

3.1.1 *Flow table and frame*

3.1.1.1 The flow table apparatus shall be constructed in accordance with figure 3. The apparatus shall consist of an integrally cast rigid iron frame and a circular rigid table top, 10 inches ± 0.1 inch (254 mm ± 2.5 mm) in diameter, with a shaft attached perpendicular to the table top by means of a screw thread. The table top, to which the shaft with its integral contact shoulder is attached, shall be mounted on a frame in such a manner that it can be raised and dropped vertically through the specified height, with a tolerance in height of ± 0.005 inches (0.13 mm) for new tables and ± 0.015 inches (0.39 mm) for tables in use, by means of a rotated cam. The table top shall have a fine-machined plane surface, free of blowholes and surface defects, and shall be scribed as shown in figure 3. The table top shall be of cast brass or bronze having a Rockwell hardness number not less than HRB 25 with an edge thickness of 0.3 inches (8 mm), and shall have six integral radial stiffening ribs. The table top and attached shaft shall weigh 9 lb ± 0.1 lb (4 kg ± 0.05 kg) and the weight shall be symmetrical around the centre of the shaft.

---

[*] Source: "Standard Specification for Flow Table for Use in Tests of Hydraulic Cement", Designation C230-68. Reprinted by permission of American Society for Testing and Materials (ASTM), 1916 Race Street, Philadelphia, Penn., USA, copyright ASTM 1977.

3.1.1.2 The cam and vertical shaft shall be of medium-carbon machinery steel, hardened where indicated in figure 3. The shaft shall be straight and the difference between the diameter of the shaft and the diameter of the bore of the frame shall be not less than 0.002 inches (0.05) and not more than 0.003 inches (0.08 mm) for new tables and shall be maintained at from 0.002 inches to 0.010 inches (0.26 mm) for tables in use. The end of the shaft shall not fall upon the cam at the end of the drop, but shall make contact with the cam not less than 120° from the point of drop. The face of the cam shall be a smooth spiralled curve of uniformly increasing radius from ½ inch to 1¼ inches (13 mm to 32 mm) in 360° and there shall be no appreciable jar as the shaft comes into contact with the cam. The cam shall be so located and the contact faces of the cam and shaft shall be such that the table does not rotate more than one revolution in 25 drops. The surfaces of the frame and of the table which come into contact at the end of the drop shall be maintained smooth, plane, and horizontal and parallel with the upper surface of the table and shall make continuous contact over a full 360°.

3.1.1.3 The supporting frame of the flow table shall be integrally cast of fine-grained, high-grade cast iron. The frame casting shall have three integral stiffening ribs extending the full height of the frame and located 120° apart. The top of the frame shall be chilled to a depth of approximately ¼ inch (6.4 mm) and the face shall be ground and lapped square with the bore to give 360° contact with the shaft shoulder. The underside of the base of the frame shall be ground to secure a complete contact with the steel plate beneath.

3.1.1.4 The flow table may be driven by a motor,[1] connected to the camshaft through an enclosed worm gear speed reducer and flexible coupling. The speed of the camshaft shall be approximately 100 rpm. The motor drive mechanism shall not be fastened or mounted on the table base plate or frame.

The performance of a flow table shall be considered satisfactory if, in calibration tests, the table gives a flow value that does not differ by more than 5 percentage points from flow values obtained with a suitable calibration material.[2]

3.1.2 *Flow table mounting*

3.1.2.1 The flow table frame shall be tightly bolted to a cast iron or steel plate at least 1 inch (25 mm) thick and 10 inches (250 mm) square. The top surface of this plate shall be machined to a smooth plane surface. The plate shall be anchored to the top of a concrete pedestal by four ½ inch (13 mm) bolts that pass through the plate and are embedded at least 6 inches (150 mm) in the pedestal. The pedestal shall be cast inverted on the base plate. A positive contact between the base plate and the pedestal shall be obtained at all points. No nuts or other such levelling devices shall be used between the plate and the pedestal. Levelling shall be effected by suitable means under the base of the pedestal.

---

1 A 1/20 hp (40 W) motor has been found adequate. The flow table may be driven by a hand-operated camshaft as shown in the illustration.

2 Such a material may be obtained from the Cement and Concrete Reference Laboratory at the National Bureau of Standards, Washington, D.C. 20234, USA.

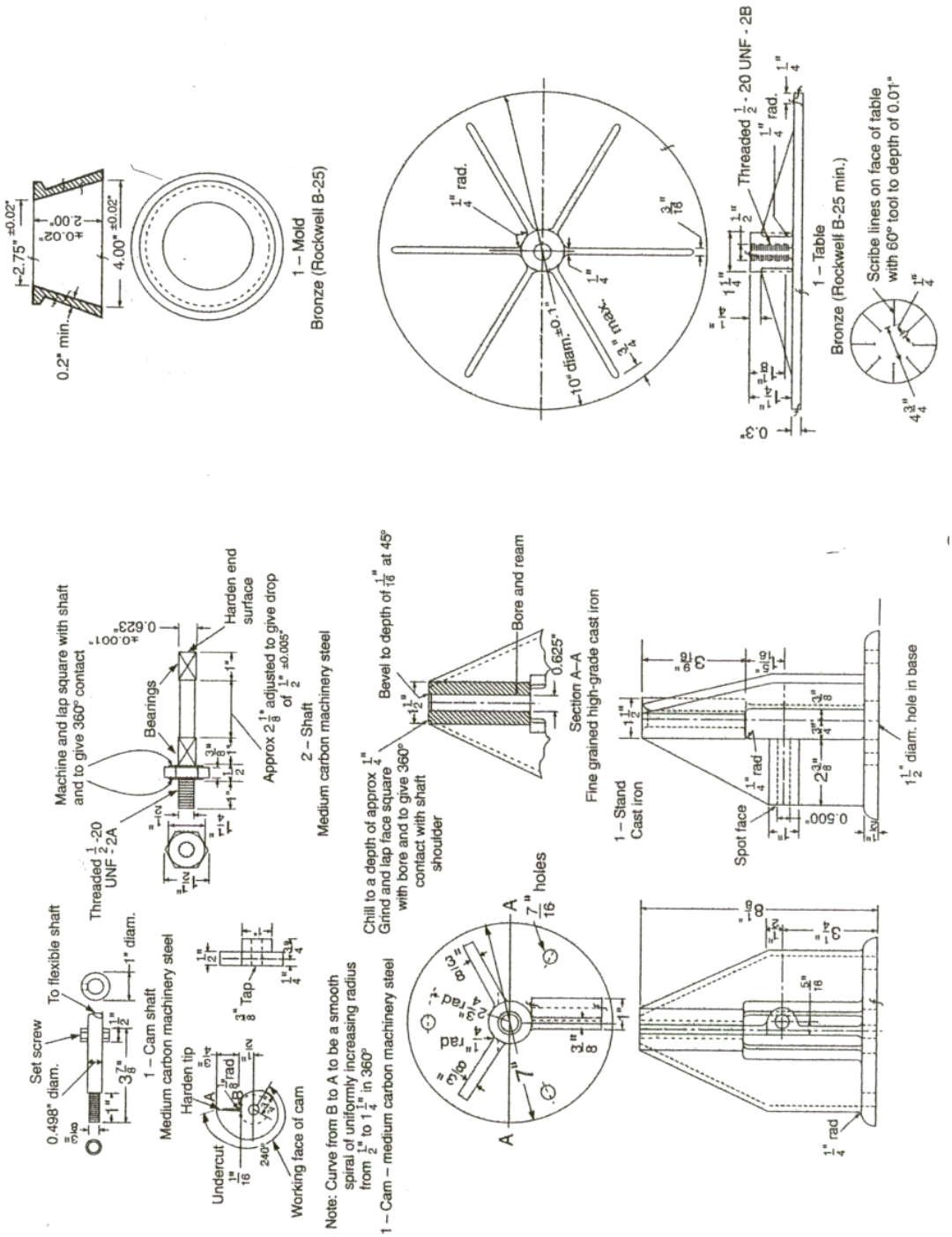
1 – Mold
Bronze (Rockwell B-25)
1 – Table
Bronze (Rockwell B-25 min.)
Scribe lines on face of table with 60° tool to depth of 0.01"
Machine and lap square with shaft and to give 360° contact
Bearings
Harden end surface
Approx 2 1/8" adjusted to give drop of 1/2" ±0.005"
2 – Shaft
Medium carbon machinery steel
Threaded 1/2-20 UNF-2A
Set screw
0.498" diam.
To flexible shaft
1" diam.
1 – Cam shaft
Medium carbon machinery steel
Harden tip
Undercut
Working face of cam
Note: Curve from B to A to be a smooth spiral of uniformly increasing radius from 1/2" to 1 1/4" in 360°
1 – Cam – medium carbon machinery steel
Chill to a depth of approx 1/4" Grind and lap face square with bore and to give 360° contact with shaft shoulder
Bevel to depth of 1/16" at 45°
Bore and ream
Section A–A
Fine grained high-grade cast iron
1 – Stand
Cast iron
Spot face
1 1/2" diam. hole in base
7/16" holes

Figure 3

3.1.2.2 The pedestal shall be 10 inches to 11 inches (250 mm to 275 mm) square at the top, and 15 inches to 16 inches (375 mm to 400 mm) square at the bottom, 25 inches to 30 inches (625 mm to 750 mm) in height, and shall be of monolithic construction, cast from concrete weighing at least 140 lb/ft^3 (2240 kg/m^3). A stable gasket cork pad, ½ inch (13 mm) thick and approximately 4 inches (102 mm) square, shall be inserted under each corner of the pedestal. The flow table shall be checked frequently for levelness of the table top, stability of the pedestal, and tightness of the bolts and nuts in the table base and the pedestal plate. (A torque of 20 lb ft (27 Nm) is recommended when tightening those fastenings.)

3.1.2.3 The table top, after the frame has been mounted on the pedestal, shall be level along two diameters at right angles to each other, in both the raised and lowered positions.

3.1.3 *Flow table lubrication*

3.1.3.1 The vertical shaft of the table shall be kept clean and shall be lightly lubricated with a light oil (SAE-10). Oil shall not be present between the contact faces of the table top and the supporting frame. Oil on the cam face will lessen wear and promote smoothness of operation. The table should be raised and permitted to drop a dozen or more times just prior to use if it has not been operated for some time.

3.1.4 *Mould*

3.1.4.1 The mould for casting the flow specimen shall be of cast bronze or brass, constructed as shown in figure 3. The Rockwell hardness number of the metal shall be not less than HRB 25. The diameter of the top opening shall be 2.75 inches ± 0.02 inches (69.8 mm ± 0.5 mm) for new moulds and 2.75 inches + 0.05 inches (+ 1.3 mm) and – 0.02 inches for moulds in use. The surfaces of the base and top shall be parallel and at right angles to the vertical axis of the cone. The mould shall have a minimum wall thickness of 0.2 inches (5 mm). The outside of the top edge of the mould shall be shaped so as to provide an integral collar for convenient lifting of the mould. All surfaces shall be machined to a smooth finish. A circular shield approximately 10 inches (254 mm) in diameter, with a centre opening approximately 4 inches (102 mm) in diameter, made of non-absorbing material not attacked by the cement, shall be used with the flow mould to prevent mortar from spilling on the table top.

3.2 *Scales and weights*[*]

3.2.1 *Scales*

3.2.1.1 The scales used shall conform to the following requirements. On scales in use, the permissible variation at a load of 2000 g shall be ± 2.0 g. The permissible variation on new scales shall be one half of this value. The sensibility reciprocal[1] shall be not greater than twice the permissible variation.

---

[*] Source, "Standard Method of Test for Compressive Strength of Hydraulic Cement Mortars", Designation C109-3. Reprinted by permission of American Society for Testing and Materials (ASTM), 1916 Race Street, Philadelphia, Penn., USA, copyright ASTM 1977.

[1] Generally defined, the sensibility reciprocal is the change in load required to change the position of rest of the indicating element or elements of a non-automatic indicating scale a definite amount at any load. For a more complete definition, see "Specifications, Tolerances, and Regulations for Commercial Weighing and Measuring Devices", *Handbook H44,* National Bureau of Standards, Washington, D.C., USA, September 1949, pp. 92 and 93.

3.2.2 *Weights*

3.2.2.1 The permissible variations on weights shall be as prescribed in the table below. The permissible variations on news weights shall be one half of the values in the table below.

PERMISSIBLE VARIATIONS ON WEIGHTS

Weight (g)	Permissible variations on weights in use, plus or minus (g)
1000	0.50
900	0.45
750	0.40
500	0.35
300	0.30
250	0.25
200	0.20
100	0.15
50	0.10
20	0.05
10	0.04
5	0.03
2	0.02
1	0.01

4 Trough test for determination of the self-sustaining exothermic decomposition of fertilizers containing nitrates*

4.1 *Definition*

A fertilizer capable of self-sustaining decomposition is defined as one in which decomposition initiated in a localized area will spread throughout the mass. The tendency of a fertilizer offered for transport to undergo this type of decomposition can be determined by means of the trough test. In this test localized decomposition is initiated in a bed of the fertilizer to be contained in a horizontally mounted trough. The amount of propagation, after removal of the initiating heat source, of decomposition through the mass is measured.

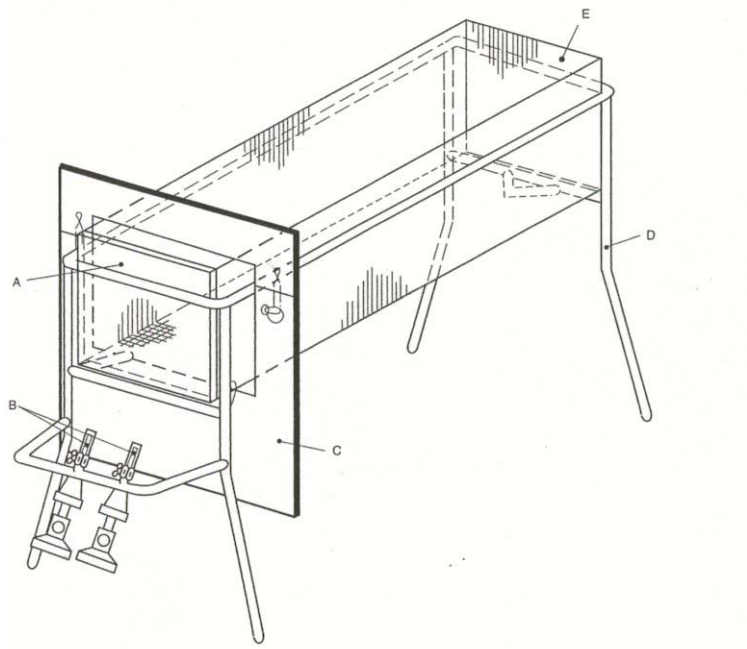

A	Steel plate (150 x 150 mm and 1 to 3 mm thick)
B	Gas burners (e.g., Teclu or Bunsen)
C	Heat shield (2 mm thick)
D	Stand (e.g., made from 15 mm wide, 2 mm thick steel bar)
E	Gauze trough (150 x 150 x 500 mm)

Figure 4-1 ***Gauze trough with support and burners***

* Source: Section 38 of the United Nations Recommendation on the Transport of Dangerous Goods, Manual of Tests and Criteria.

4.2 *Apparatus and materials*

The apparatus (figure 4-1) consists of a trough of internal dimensions 150 mm x 150 mm x 500 mm, open at the top. The trough is constructed of square-meshed gauze (preferably stainless steel) with a mesh width of about 1.5 mm and a wire thickness of 1.0 mm supported on a frame made from, for example, 15 mm wide, 2 mm thick steel bars. The gauze at each end of the trough may be replaced by 1.5 mm thick, 150 mm x 150 mm stainless steel plates. The trough should be rested on a suitable support. Fertilizers with a particle size distribution such that a significant amount falls through the mesh of the trough should be tested in a trough of smaller mesh gauze, or alternatively in a trough lined with gauze of a smaller mesh. During initiation sufficient heat should be provided and maintained to establish a uniform decomposition front. Two alternative heating methods are recommended, *viz*:

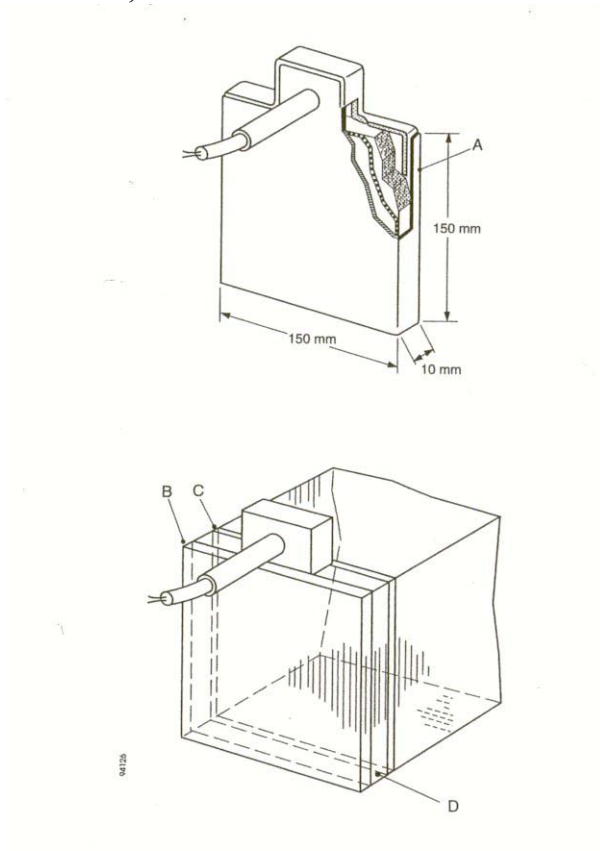

A Aluminium or stainless steel sheathing (thickness 3 mm)

B Insulating plate (thickness 5 mm)

C Aluminium foil or stainless steel plate (thickness 3 mm)

D Position of heating device in trough

Figure 4-2 ***Electrical heating device (capacity 250 W)***

4.2.1 *Electrical heating*

An electrical heating element (capacity 250 W) enclosed in a stainless steel box is placed inside and at one end of the trough (figure 4-2). The dimensions of the stainless steel box are 145 mm x 145 mm x 10 mm, and the wall thickness is 3 mm. The side of the box which is not in contact with the fertilizer should be protected with a heat shield (insulation plate 5 mm thick). The heating side of the box may be protected with aluminium foil or a stainless steel plate.

4.2.2 *Gas burners*

A steel plate (thickness 1 mm to 3 mm) is placed inside one end of the trough and in contact with the wire gauze (figure 4-1). The plate is heated by means of two burners which are fixed to the trough support and are capable of maintaining the plate at temperatures between 400°C and 600° C, i.e., dull red heat.

4.2.3 To prevent heat transport along the outside of the trough, a heat shield consisting of a steel plate (2 mm thick) should be installed at about 50 mm from the end of the trough where the heating takes place.

4.2.4 The life of the apparatus may be prolonged if it is constructed of stainless steel throughout. This is particularly important in the case of the gauze trough.

4.2.5 Propagation may be measured using thermocouples in the substance and recording the time at which a sudden temperature rise occurs as the reaction front reaches the thermocouple.

4.3 *Procedure*

4.3.1 The apparatus should be set up under a fume hood to remove toxic decomposition gases or in an open area where the fumes can be readily dispersed. Although there is no explosion risk, when performing the test it is advisable to have a protective shield, e.g., of suitable transparent plastics, between the observer and the apparatus.

4.3.2 The trough is filled with the fertilizer in the form to be offered for shipment and decomposition is initiated at one end, either electrically or by means of gas burners as described above. Heating should be continued until decomposition of the fertilizer is well established and propagation of the front (over approximately 30 mm to 50 mm) has been observed. In the case of products with high thermal stability, it may be necessary to continue heating for two hours. If fertilizers show a tendency to melt, the heating should be done with care, i.e., using a small flame.

4.3.3 About 20 minutes after the heating has been discontinued, the position of the decomposition front is noted. The position of the reaction front can be determined by difference in colour, e.g., brown (undecomposed fertilizer) to white (decomposed fertilizer), or by the temperature indicated by adjacent pairs of thermocouples which bracket the reaction front. The rate of propagation may be determined by observation and timing or from thermocouple records. It should be noted whether there is no propagation after heating is discontinued or whether propagation occurs throughout the substance.

4.4 *Test criteria and method of assessing results*

4.4.1 If propagation of the decomposition continues throughout the substance the fertilizer is considered capable of showing self-sustaining decomposition.

4.4.2 If propagation does not continue throughout the substance, the fertilizer is considered to be free from the hazard of self-sustaining decomposition.

5 Description of the Test of Resistance to Detonation

5.1 *Principle*

5.1.1 The test sample is confined in a steel tube and subjected to detonation shock from an explosive booster charge. Propagation of the detonation is determined from the degree of compression of lead cylinders on which the tube rests horizontally during the test.

5.2 *Sample Preparation*

5.2.1 The test must be carried out on a representative sample of cargo. Before being tested for resistance to detonation, the whole mass of the sample is to be thermally cycled five times between 25°C and 50°C (± 1°C) in sealed tubes. The sample shall be maintained at the extreme temperatures, measured at the centre of the sample, for at least 1 hour during each thermal cycle and at 20°C (± 3°C) after complete cycling until tested.

5.3 *Materials*

Seamless steel tube to ISO 65-1981-Heavy or equivalent

Tube length	1,000 mm
Nominal external diameter	114 mm
Nominal wall thickness	5 to 6.5 mm

Bottom plate (160 x 160 mm) of good weldable quality, thickness 5 to 6 mm to be butt-welded to one end of the tube around the entire circumference.

Initiation system and booster

Electrical blasting cap or detonating cord with non-metallic sleeve (10 to 13 g/m).

Compressed pellet of secondary explosive, such as hexogen/wax 95/5 or tetryl, with a central recess to take the detonator.

500 ± 1 gramme plastic explosive containing 83 to 86 % penthrite, formed into a cylinder in a cardboard or plastic tube. Detonation velocity 7,300 to 7,700 m/s.

Six witness cylinders of refined, cast lead for detecting detonation

50 mm diameter x 100 mm high, refined lead of at least 99.5% purity.

5.4 *Procedure*

Test Temperature: 15 to 20°C. Figures 1 and 2 show the test arrangement.

Fill the tube about one-third of its height with the test sample and drop it 10 cm vertically five times on the floor. Improve the compression by striking the side wall with a hammer between drops. A further addition shall be made such that, after compaction or by raising and dropping the tube 20 times and a total of 20 intermittent hammer blows, the charge fills the tube to a distance of 70 mm from its orifice.

Insert the plastic explosive into the tube and press it down with a wooden die. Place the compressed pallet centrally in the recess within the plastic explosive. Close it with a wooden disc so that it remains in contact with the test sample. Lay the test tube horizontally on the 6 lead cylinders placed at 150 mm intervals (centric), with the centre of the last cylinder 75 mm from the bottom plate, on a firm, level, solid surface that is resistant to deformation or displacement. Insert the electrical blasting cap or the detonating cord.

Ensure that all necessary safety precautions are taken, connect and detonate the explosive.

Record, for each of the lead cylinders, the degree of compression expressed as a percentage of the original height of 100 mm. For oblique compression, the deformation is taken as the average of the maximum and minimum deformation.

5.5 *Results*

The test is to be carried out twice. If in each test one or more of the supporting lead cylinders are crushed by less than 5%, the sample is deemed to satisfy the resistance to detonation requirements.

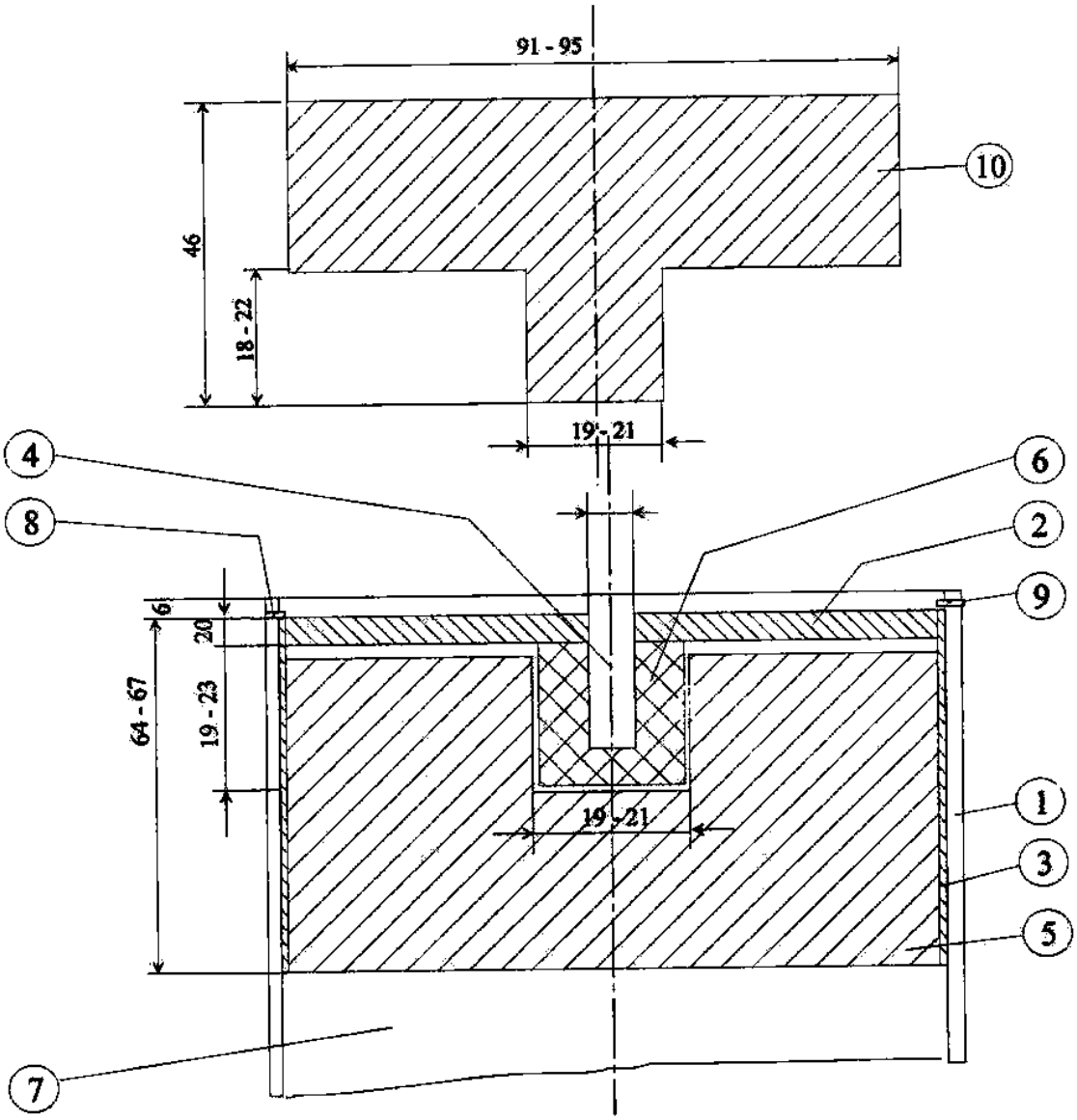

Dimensions in mm

①	Steel tube	⑥	Compressed pellet
②	Wooden disc	⑦	Test sample
③	Plastic or cardboard cylinder	⑧	4-mm diameter hole drilled to receive split pin (9)
④	Wooden rod	⑨	Split pin
⑤	Plastic explosive	⑩	Wooden die for (5) diameter as for detonator

Figure 1: ***Booster charge***

① Steel tube

② Lead cylinders

③ Steel block

④ Bottom plate

⑤ Booster charge

1 to 6 numbers of lead cylinders

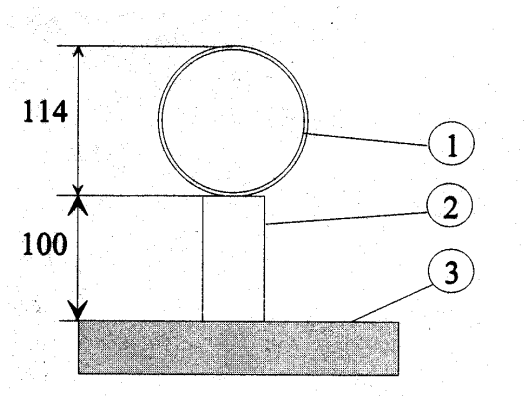

dimensions in mm

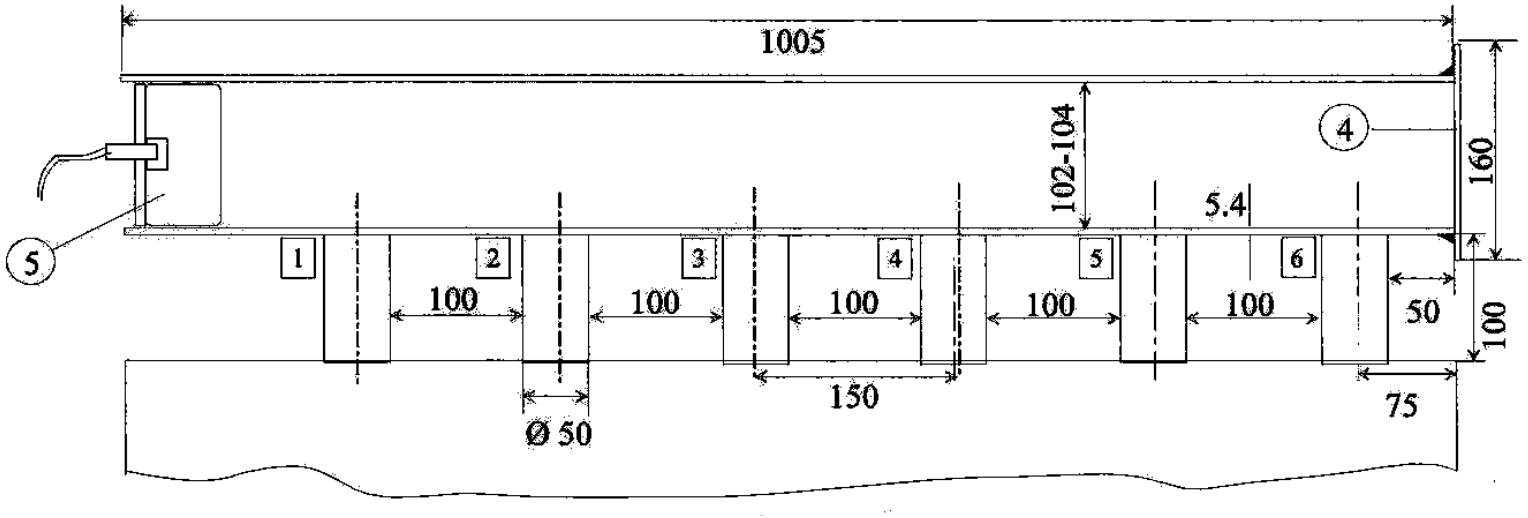

Figure 2: ***Positioning of the steel tube on the firing site***

6 Self-heating test for charcoal

6.1 *Apparatus*

6.1.1 *Oven*. A laboratory oven fitted with internal air circulation and capable of being controlled at 140°C ± 2°C.

6.1.2 *Wire mesh cube*. Construct an open-top cube, 100 mm side, from phosphor bronze gauze 18.000 mesh per square centimetre (350 x 350 mesh). Insert it inside a slightly larger, well-fitting cube, made of phosphor bronze gauze 11 mesh per square centimetre (8 x 8 mesh). Fit the outer cube with a handle or hooks so that it can be suspended from above.

6.1.3 *Temperature measurement*. A suitable system to measure and record the temperature of the oven and in the centre of the cube. "Chromel-alumel" thermocouples, made from 0.27 mm diameter wire, are suitable for measuring the temperature range expected.

6.2 *Procedure*

6.2.1 Fill the cube with carbon and tap down gently, adding carbon until the cube is full. Suspend the sample in the centre of the oven which has been preheated to 140°C ± 2°C. Insert one of the thermocouples in the centre of the sample and the other between the cube and the oven wall. Maintain the temperature of the oven at 140°C ± 2°C for 12 hours and record the oven temperature and the sample temperature.

6.3 *Results*

6.3.1 Non-activated carbon, non-activated charcoal, carbon black and lamp black fail the test if the temperature at any time during the 12 hours exceeded 200°C.

6.3.2 Activated carbon and activated charcoal fail the test if the temperature at any time during the 12 hours exceeded 400°C.

APPENDIX 3

PROPERTIES OF DRY BULK CARGOES

1 Non-cohesive cargoes

1.1 The following cargoes are non-cohesive when dry:

AMMONIUM NITRATE
AMMONIUM NITRATE BASED FERTILIZERS (TYPE A, TYPE B and NON-HAZARDOUS)
AMMONIUM SULPHATE
BORAX, anhydrous
CALCIUM NITRATE FERTILIZER
CASTOR BEANS
DIAMMONIUM PHOSPHATE
MONOAMMONIUM PHOSPHATE
POTASSIUM CHLORIDE
POTASH
POTASSIUM NITRATE
POTASSIUM SULPHATE
SODIUM NITRATE
SODIUM NITRATE AND POTASSIUM NITRATE MIXTURE
SUPERPHOSPHATE
UREA

1.2 Prior to completion of loading, the angle of repose of the materials to be loaded should be determined (see section 6) so as to determine which provisions of this Code relating to trimming apply (see section 5).

1.3 All cargoes, other than those listed in this appendix, are cohesive and the use of the angle of repose is, therefore, not appropriate. Cargoes not listed should be treated as cohesive until otherwise shown.

2 Cargoes which may liquefy

2.1 Many fine-particled cargoes if possessing a sufficiently high moisture content are liable to flow. Thus any damp or wet cargo containing a proportion of fine particles should be tested for flow characteristics prior to loading.

3 Precautions for the cargoes which may possess a chemical hazard

3.1 In circumstances where consultation with the competent authority is required prior to shipment of dry bulk cargoes, it is equally important to consult authorities at the port of loading and discharge concerning requirements which may be in force.

3.2 Where required, the Medical First Guide for Use in Accidents Involving Dangerous Goods (MFAG) should be consulted prior to loading.

APPENDIX 4

INDEX

BULK CARGO SHIPPING NAME	GROUP	REFERENCES
ALFALFA	C	
ALUMINA	C	
ALUMINA, CALCINED	C	
ALUMINA, SILICA	C	
ALUMINA SILICA, pellets	C	
ALUMINIUM FERROSILICON POWDER UN 1395	B	
ALUMINIUM NITRATE UN 1438	B	
ALUMINIUM REMELTING BY-PRODUCTS UN 3170	B	see ALUMINIUM SMELTING BY-PRODUCTS
ALUMINIUM SILICON POWDER, UNCOATED UN 1398	B	
ALUMINIUM SMELTING BY-PRODUCTS UN 3170	B	
AMMONIUM NITRATE UN 1942	B	
AMMONIUM NITRATE BASED FERTILIZER (Type A) UN 2067	B	
AMMONIUM NITRATE BASED FERTILIZER (Type B) UN 2071	B	
AMMONIUM NITRATE, BASED FERTILIZER (non-hazardous)	C	
AMMONIUM SULPHATE	C	
ANTIMONY ORE AND RESIDUE	C	
Antimony ore residue	C	see ANTIMONY ORE AND RESIDUE
Bakery materials	B or C	see SEED CAKE
BARIUM NITRATE UN 1446	B	
Barley malt pellets	B or C	see SEED CAKE
BARYTES	C	
BAUXITE	C	
Beet, expelled or extracted	B or C	see SEED CAKE
BIOSLUDGE	C	
Blende (zinc sulphide)	A	see ZINC CONCENTRATE
BORAX, ANHYDROUS, crude	C	
BORAX, ANHYDROUS, refined	C	
BORAX (PENTAHYDRATE CRUDE)	C	
Bran pellets	B or C	see SEED CAKE
Brewer's grain pellets	B or C	see SEED CAKE
BROWN COAL BRIQUETTES	B	
Calcined clay	C	see ALUMINA, CALCINED
Calcined pyrites	A and B	see PYRITES, CALCINED
Calcium fluoride	B	see FLUORSPAR
CALCIUM NITRATE UN 1454	B	
CALCIUM NITRATE FERTILIZER	C	
Calcium oxide	B	see LIME (UNSLAKED)
Canola Pellets	B or C	see SEED CAKE
CARBORUNDUM	C	
CASTOR BEANS UN 2969	B	
CASTOR FLAKE UN 2969	B	

BULK CARGO SHIPPING NAME	GROUP	REFERENCES
CASTOR MEAL UN 2969	B	
CASTOR POMACE UN 2969	B	
CEMENT	C	
CEMENT CLINKERS	C	
CEMENT COPPER	A	see Mineral Concentrates
Chalcopyrite	A	see COPPER CONCENTRATE
CHAMOTTE	C	
CHARCOAL	B	
CHOPPED RUBBER AND PLASTIC INSULATION	C	
Chile saltpetre	B	see SODIUM NITRATE
Chilean natural nitrate	B	see SODIUM NITRATE
Chilean natural potassic nitrate	B	see SODIUM NITRATE AND POTASSIUM NITRATE MIXTURE
Chrome ore	C	see CHROMITE ORE
CHROME PELLETS	C	
CHROMITE ORE	C	
Chromium ore	C	see CHROMITE ORE
Citrus pulp pellets	B or C	see SEED CAKE
CLAY	C	
COAL	A and B	
COAL SLURRY	A	
COARSE CHOPPED TYRES	C	
Coconut	B or C	see SEED CAKE
COKE	C	
COKE BREEZE	A	
COLEMANITE	C	
COPPER CONCENTRATE	A	see Mineral Concentrates
COPPER GRANULES	C	
COPPER MATTE	C	
Copper nickel	A	see NICKEL CONCENTRATE
Copper ore concentrate	A	see COPPER CONCENTRATE
Copper precipitate	A	see CEMENT COPPER
Copra, expelled or extracted	B or C	see SEED CAKE
COPRA (dry) UN 1363	B	
Corn gluten	B or C	see SEED CAKE
Cotton seed expellers	B or C	see SEED CAKE
CRYOLITE	C	
Deadburned magnesite	C	see MAGNESIA (DEADBURNED)
DIAMMONIUM PHOSPHATE	C	
DIRECT REDUCED IRON, (A) (Briquettes, hot-moulded)	B	
DIRECT REDUCED IRON, (B) (lumps, pellets, cold moulded briquettes)	B	
DOLOMITE	C	
Dolomitic quicklime	B	see LIME (UNSLAKED)
D.R.I.	B	see DIRECT REDUCED IRON A or B
FELSPAR LUMP	C	
FERROCHROME	C	
FERROCHROME, exothermic	C	

BULK CARGO SHIPPING NAME	GROUP	REFERENCES
FERROMANGANESE	C	
Ferromanganese, exothermic	C	see FERROMANGANESE
FERRONICKEL	C	
FERROPHOSPHORUS	B	
Ferrophosphorus briquettes	B	see FERROPHOSPHORUS
FERROSILICON UN 1408	B	
FERROUS METAL BORINGS UN 2793	B	
FERROUS METAL CUTTINGS UN 2793	B	
FERROUS METAL SHAVINGS UN 2793	B	
FERROUS METAL TURNINGS UN 2793	B	
FERTILIZERS WITHOUT NITRATES	C	
FISH (IN BULK)	A	
FISHMEAL, STABILIZED UN 2216	B	
FISHSCRAP, STABILIZED UN 2216	B	
FLUORSPAR	A and B	
FLY ASH	C	
Galena (lead sulphide)	A	see LEAD CONCENTRATE
Garbage tankage	B	see TANKAGE
Gluten pellets	B or C	see SEED CAKE
GRANULATED SLAG	C	
GRANULATED TYRE RUBBER	C	
Ground nuts, meal	B or C	see SEED CAKE
GYPSUM	C	
Hominy chop	B or C	see SEED CAKE
ILMENITE CLAY	A	
ILMENITE SAND	C	
IRON CONCENTRATE	A	see Mineral Concentrates
IRON CONCENTRATE (pellet feed, sinter feed)	A	see Mineral Concentrates
Iron disulphide	C	see PYRITE
IRON ORE	C	
Iron ore (concentrate, pellet feed, sinter feed)	A	see IRON CONCENTRATE (pellet feed or sinter feed)
IRON ORE PELLETS	C	
IRON OXIDE, SPENT UN 1376	B	
IRON PYRITES	C	
Iron swarf	B	see FERROUS METAL BORINGS, SHAVINGS, TURNINGS OR CUTTINGS
Iron sponge, spent	B	see IRON OXIDE, SPENT
IRONSTONE	C	
LABRADORITE	C	
LEAD AND ZINC CALCINES	A	see Mineral Concentrates
LEAD AND ZINC MIDDLINGS	A	see Mineral Concentrates
LEAD CONCENTRATE	A	see Mineral Concentrates
LEAD NITRATE UN 1469	B	
LEAD ORE	C	
Lead ore concentrate	A	see LEAD CONCENTRATE
LEAD ORE RESIDUE	A	see Mineral Concentrates
LEAD SILVER CONCENTRATE	A	see Mineral Concentrates
Lead silver ore	A	see LEAD SILVER CONCENTRATE
Lead sulphide	A	see LEAD CONCENTRATE

BULK CARGO SHIPPING NAME	GROUP	REFERENCES
Lead sulphide (galena)	A	see LEAD CONCENTRATE
Lignite	B	see BROWN COAL BRIQUETTES
LIME (UNSLAKED)	B	
LIMESTONE	C	
LINTED COTTON SEED	B	
Linseed, expelled	B or C	see SEED CAKE
Linseed, extracted	B or C	see SEED CAKE
MAGNESIA (DEADBURNED)	C	
MAGNESIA (UNSLAKED)	B	
Magnesia, clinker	C	see MAGNESIA (DEADBURNED)
Magnesia, electro-fused	C	see MAGNESIA (DEADBURNED)
Magnesia lightburned	B	see MAGNESIA (UNSLAKED)
Magnesia calcined	B	see MAGNESIA (UNSLAKED)
Magnesia caustic calcined	B	see MAGNESIA (UNSLAKED)
Magnesite clinker	C	see MAGNESIA (DEADBURNED)
MAGNESITE, natural	C	
Magnesium carbonate	C	see MAGNESITE, natural
MAGNESIUM NITRATE UN 1474	B	
MAGNETITE	A	
Magnetite-taconite	A	see MAGNETITE
Maize, expelled	B or C	see SEED CAKE
Maize, extracted	B or C	see SEED CAKE
MANGANESE CONCENTRATE	A	see Mineral Concentrates
MANGANESE ORE	C	
M.A.P.	C	see MONO AMMONIUM PHOSPHATE
MARBLE CHIPS	C	
Meal, oily	B or C	see SEED CAKE
METAL SULPHIDE CONCENTRATES	A and B	
Mill feed pellets	B or C	see SEED CAKE
Milorganite	C	see BIOSLUDGE
Mineral Concentrates	A	
MONOAMMONIUM PHOSPHATE	C	
Muriate of potash	C	see POTASSIUM CHLORIDE
NEFELINE SYENITE (mineral)	A	see Mineral Concentrates
NICKEL CONCENTRATE	A	see Mineral Concentrates
Nickel ore concentrate	A	see NICKEL CONCENTRATE
Niger seed, expelled	B or C	see SEED CAKE
Niger seed, extracted	B or C	see SEED CAKE
Oil cake	B or C	see SEED CAKE
Palm kernel, expelled	B or C	see SEED CAKE
Palm kernel, extracted	B or C	see SEED CAKE
Peanuts, expelled or extracted	B or C	see SEED CAKE
PEANUTS (in shell)	C	
PEAT MOSS	A and B	
PEBBLES (sea)	C	
PELLETS (concentrates)	C	
Pellets (cereal)	B or C	see SEED CAKE
Pellets, wood pulp	B	see WOOD PULP PELLETS
Pencil pitch	B	see PITCH PRILL
PENTAHYDRATE CRUDE	A	see Mineral Concentrates

BULK CARGO SHIPPING NAME	GROUP	REFERENCES
PERLITE ROCK	C	
PETROLEUM COKE, calcined	B	
PETROLEUM COKE, uncalcined	B	
PHOSPHATE ROCK, calcined	C	
PHOSPHATE ROCK, uncalcined	C	
PHOSPHATE, defluorinated	C	
PIG IRON	C	
PITCH PRILL	B	
Pollard pellets	B or C	see SEED CAKE
POTASH	C	
Potash muriate	C	see POTASSIUM CHLORIDE
POTASSIUM CHLORIDE	C	
POTASSIUM NITRATE UN 1486	B	
Potassium nitrate/sodium nitrate (mixture)	B	see SODIUM NITRATE AND POTASSIUM NITRATE MIXTURE UN 1499
POTASSIUM SULPHATE	C	
Prilled coal tar	B	see PITCH PRILL
PUMICE	C	
PYRITE (containing copper and iron)	C	
PYRITES, CALCINED	A and B	
PYRITES	A	see Mineral Concentrates
Pyrites (cupreous, fine, flotation, or sulphur)	A	see PYRITES
Pyritic ash	A and B	see PYRITES, CALCINED
PYRITIC ASHES	A	see Mineral Concentrates
PYRITIC CINDERS	A	see Mineral Concentrates
PYROPHYLLITE	C	
QUARTZ	C	
QUARTZITE	C	
Quicklime	B	see LIME (UNSLAKED)
RADIOACTIVE MATERIAL, LOW SPECIFIC ACTIVITY (LSA-1) UN 2912	B	
RADIOACTIVE MATERIAL, SURFACE CONTAMINATED OBJECTS (SCO-1) UN 2913	B	
Rape seed, expelled	B or C	see SEED CAKE
Rape seed, extracted	B or C	see SEED CAKE
RASORITE (ANHYDROUS)	C	
Rice bran	B or C	see SEED CAKE
Rice broken	B or C	see SEED CAKE
Rough ammonia tankage	B	see TANKAGE
RUTILE SAND	C	
Safflower seed, expelled	B or C	see SEED CAKE
Safflower seed, extracted	B or C	see SEED CAKE
SALT	C	
SALT CAKE	C	
SALT ROCK	C	
Saltpetre	B	see POTASSIUM NITRATE
SAND	C	
Sand, ilmenite	C	see ILMENITE SAND
Sand, zircon	C	see ZIRCON SAND
SAWDUST	B	

BULK CARGO SHIPPING NAME	GROUP	REFERENCES
SCRAP METAL	C	
SEED CAKE Type (a) UN 1386	B	
SEED CAKE Type (b) UN 1386	B	
SEED CAKE UN 2217	B	
SEED CAKE (non-hazardous)	C	
Seed expellers, oily	B or C	see SEED CAKE
SILICOMANGANESE	B	
SILVER LEAD CONCENTRATE	A	see Mineral Concentrates
Silver lead ore concentrate	A	see SILVER LEAD CONCENTRATE
Sinter		see ZINC AND LEAD CALCINES
Slag, granulated	C	see GRANULATED SLAG
SLIG, iron ore	A	see Mineral Concentrates
SODA ASH	C	
SODIUM NITRATE UN 1498	B	
SODIUM NITRATE AND POTASSIUM NITRATE MIXTURE UN 1499	B	
Soyabean, expelled	B or C	see SEED CAKE
Soyabean, extracted	B or C	see SEED CAKE
STAINLESS STEEL GRINDING DUST	C	
Steel swarf	B	see FERROUS METAL BORINGS, SHAVINGS, TURNINGS OR CUTTINGS
Stibnite	C	see ANTIMONY ORE AND RESIDUE
STONE CHIPPINGS	C	
Strussa pellets	B or C	see SEED CAKE
SUGAR	C	
SULPHATE OF POTASH AND MAGNESIUM	C	
Sulphide concentrates	B	see METAL SULPHIDE CONCENTRATES
SULPHUR UN 1350	B	
Sunflower seed, expelled	B or C	see SEED CAKE
Sunflower seed, extracted	B or C	see SEED CAKE
SUPERPHOSPHATE	C	
SUPERPHOSPHATE (triple granular)	C	
Swarf	B	see FERROUS METAL BORINGS, SHAVINGS, TURNINGS OR CUTTINGS
TACONITE PELLETS	C	
TALC	C	
TANKAGE	B	
Tankage fertilizer	B	see TANKAGE
TAPIOCA	C	
Toasted meals	B or C	see SEED CAKE
Triple superphosphate	C	see SUPERPHOSPHATE, triple granular
UREA	C	
VANADIUM ORE	B	
VERMICULITE	C	
WHITE QUARTZ	C	
WOODCHIPS	B	
WOOD PELLETS	B	
WOOD PULP PELLETS	B	

BULK CARGO SHIPPING NAME	GROUP	REFERENCES
ZINC AND LEAD CALCINES	A	see Mineral Concentrates
ZINC AND LEAD MIDDLINGS	A	see Mineral Concentrates
ZINC ASHES UN 1435	B	
ZINC CONCENTRATE	A	see Mineral Concentrates
Zinc, dross, residue or skimmings	B	see ZINC ASHES
Zinc ore, burnt	A	see ZINC CONCENTRATE
Zinc ore, calamine	A	see ZINC CONCENTRATE
Zinc ore, concentrates	A	see ZINC CONCENTRATE
Zinc ore, crude	A	see ZINC CONCENTRATE
ZINC SINTER	A	see Mineral Concentrates
ZINC SLUDGE	A	see Mineral Concentrates
Zinc sulphide	A	see ZINC CONCENTRATE
Zinc sulphide (blende)	A	see ZINC CONCENTRATE
ZIRCON SAND	C	