SG-0001

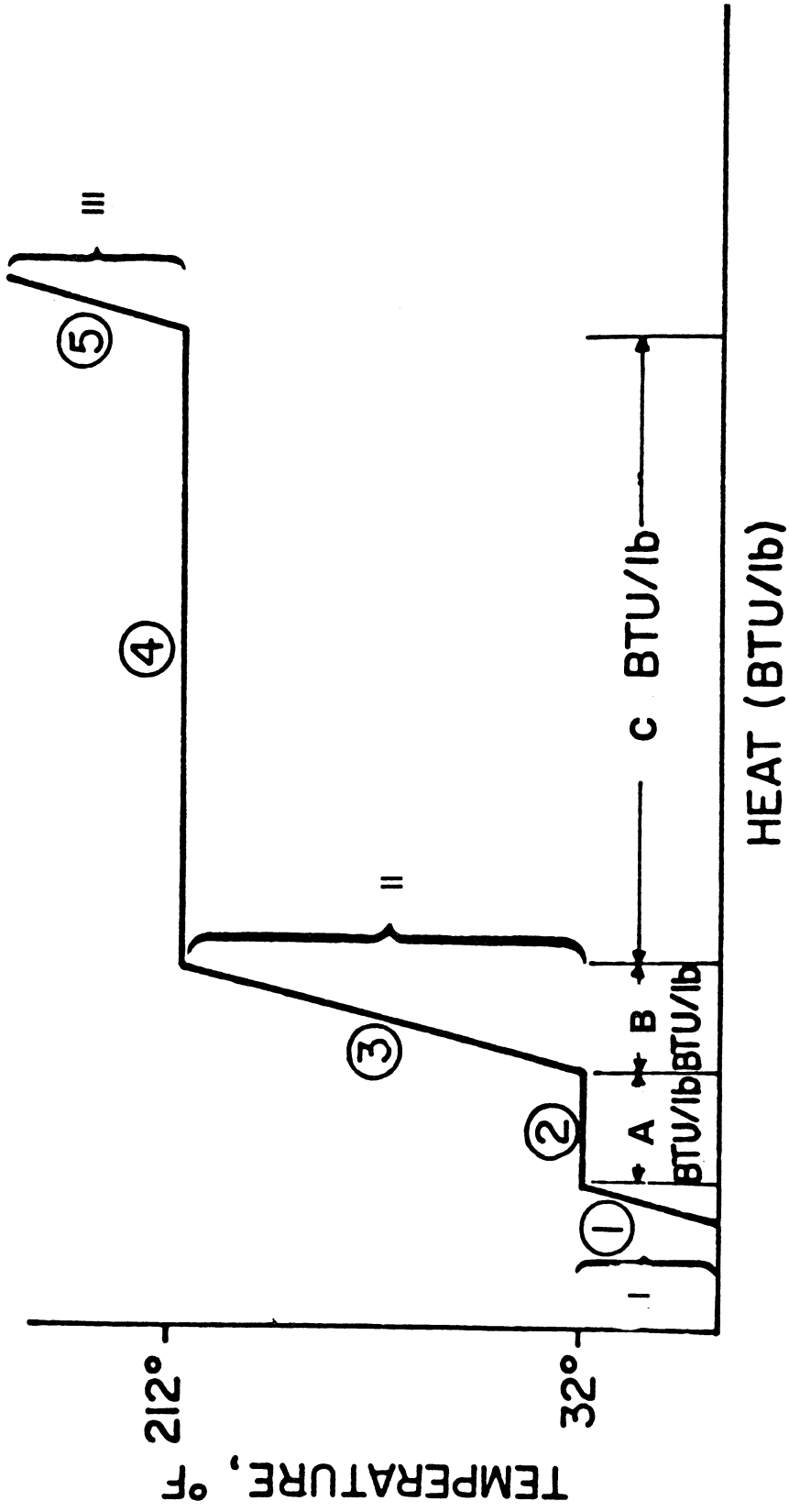
TEMPERATURE, °F
212°
32°
HEAT (BTU/lb)
A BTU/lb
B BTU/lb
C BTU/lb
I
II
III
1
2
3
4
5

SG-0002

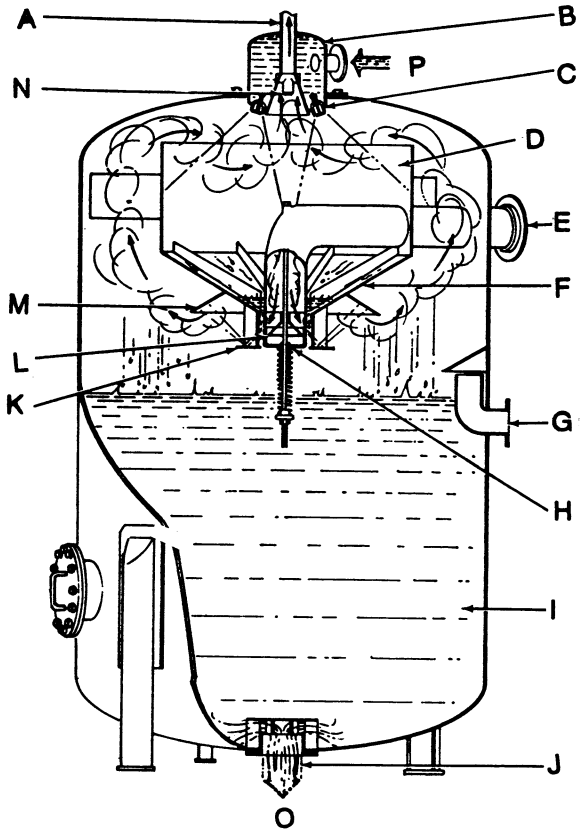

SG-0003

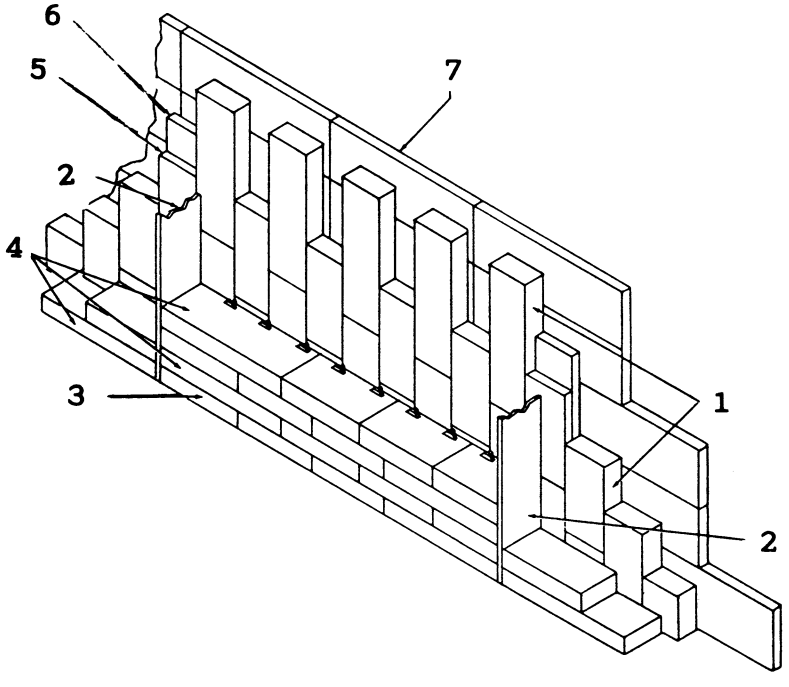

Table 1. Saturation, Temperatures

Temp, °F	Abs press, psi	Specific vol		Enthalpy (heat)		
		Sat liquid	Sat vapor	Sat liquid	Evap	Sat vapor
32	0.08859	0.01602	3304.7	0.01	1075.5	1075.5
40	0.12170	0.01602	2444	8.05	1071.3	1079.3
50	0.17811	0.01603	1703.2	18.07	1065.6	1083.7
60	0.2563	0.01604	1206.7	28.06	1059.9	1088.0
70	0.3631	0.01606	867.9	38.04	1054.3	1092.3
80	0.5069	0.01608	633.1	43.02	1048.6	1096.6
90	0.6982	0.01610	468.0	57.99	1042.9	1100.9
100	0.9492	0.01613	350.4	67.97	1037.2	1105.2
110	1.2748	0.01617	265.4	77.94	1031.6	1109.5
120	1.6924	0.01620	203.27	87.92	1025.8	1113.7
130	2.2225	0.01625	157.34	97.90	1020.0	1117.9
140	2.8886	0.01629	123.01	107.9	1014.1	1122.0
150	3.718	0.01634	97.07	117.9	1008.2	1126.1
160	4.741	0.01639	77.29	127.9	1002.3	1130.2
170	5.992	0.01645	62.06	137.9	996.3	1134.2
180	7.510	0.01651	50.23	147.9	990.2	1138.1
190	9.339	0.01657	40.96	157.9	984.1	1142.0
200	11.526	0.01663	33.64	168.0	977.9	1145.9
212	14.696	0.01672	26.80	180.0	970.4	1150.4
220	17.186	0.01677	23.15	188.1	965.2	1153.4
240	24.969	0.01692	16.323	208.3	952.2	1160.5
280	49.203	0.01726	8.645	249.1	924.7	1173.8
300	67.013	0.01745	6.466	269.6	910.1	1179.7
340	118.01	0.01787	3.788	311.1	879.0	1190.1
380	195.77	0.01836	2.335	353.5	844.6	1198.1
400	247.31	0.01864	1.8633	375.0	826.0	1201.0

Table 2. Saturation, Pressures

Abs press, psi	Temp, °F	Specific vol		Enthalpy (heat)		
		Sat liquid	Sat vapor	Sat liquid	Evap	Sat vapor
0.50	79.58	0.01608	641.4	47.6	1048.8	1096.4
1.0	101.74	0.01614	333.6	69.7	1036.3	1106.0
5.0	162.24	0.01640	73.52	130.1	1001.0	1131.1
10	193.21	0.01659	38.42	161.2	982.1	1143.3
14.7	212.00	0.01672	26.80	180.0	970.4	1150.4
15	213.03	0.01672	26.29	181.1	969.7	1150.8
20	227.96	0.01683	20.089	196.2	960.1	1156.3
25	240.07	0.01692	16.303	208.5	952.1	1160.6
30	250.33	0.01701	13.746	218.8	945.3	1164.1
40	267.25	0.01715	10.498	236.0	933.7	1169.7
50	281.01	0.01727	8.515	250.1	924.0	1174.1
60	292.71	0.01738	7.175	262.1	915.5	1177.6
70	302.92	0.01748	6.206	272.6	907.9	1180.6
80	312.03	0.01757	5.472	282.0	901.1	1183.1
90	320.27	0.01766	4.896	290.6	894.7	1185.3
100	327.81	0.01774	4.432	298.4	888.8	1187.2
110	334.77	0.01782	4.049	305.7	883.2	1188.9
120	341.25	0.01789	3.728	312.4	877.9	1190.4
130	347.32	0.01796	3.455	318.8	872.9	1191.7
140	353.02	0.01802	3.220	324.8	868.2	1193.0
150	358.42	0.01809	3.015	330.5	863.6	1194.1
200	381.79	0.01839	2.288	355.4	843.0	1198.4
250	400.95	0.01865	1.8438	376.0	825.1	1201.1
300	417.33	0.01890	1.5433	393.8	809.0	1202.8
350	431.72	0.01913	1.3260	409.7	794.2	1203.9
400	444.59	0.0193	1.1613	424.0	780.5	1204.5

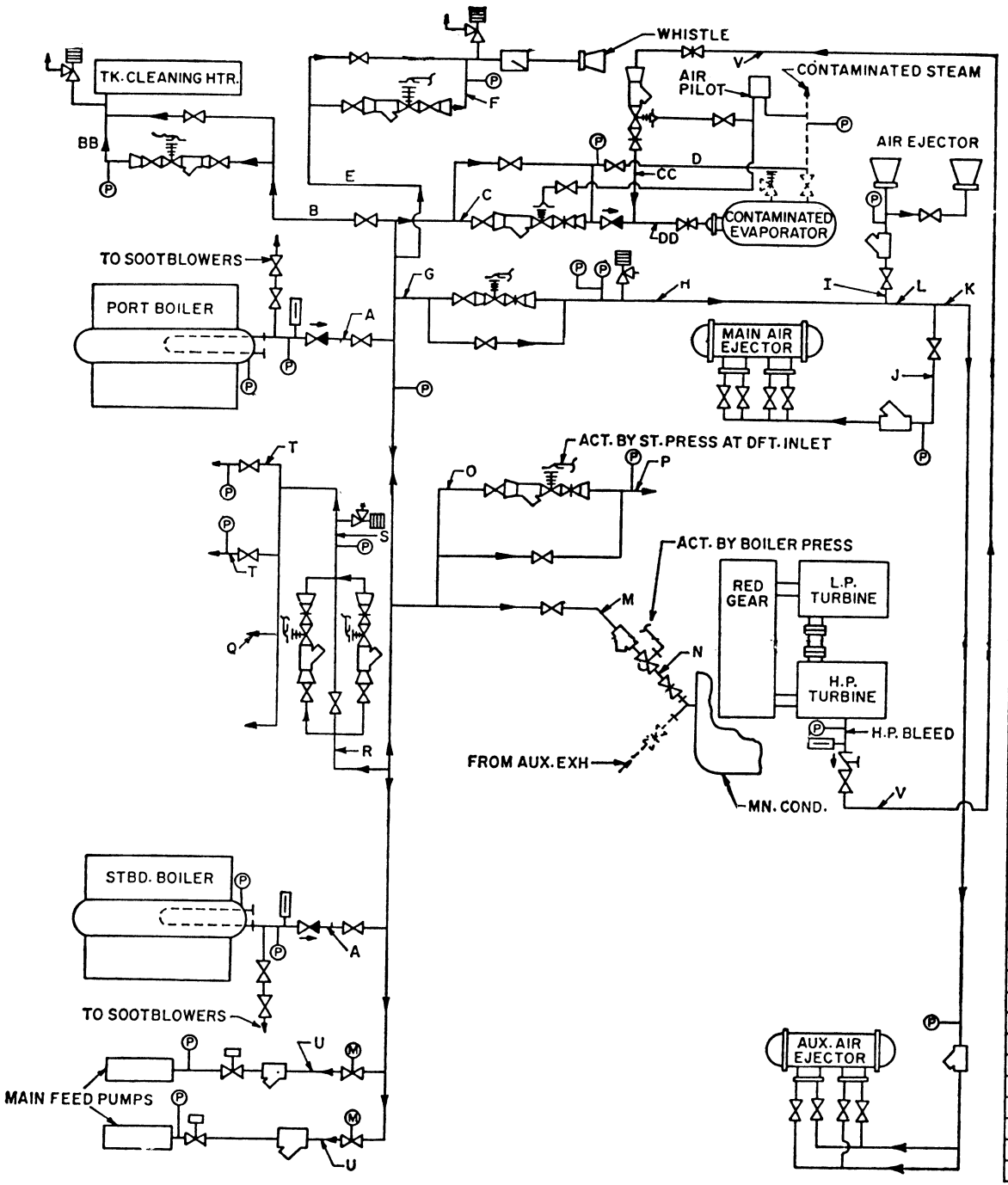

FLOWS AND VELOCITIES						
SYM	IPS	NOM. PRESS PSIG	VEL, FT/SEC	FLOW, LB/HR	CONDITION	SERVICE
A	4	775	45.7	20000	MAXIMUM	DESUPHTR STM. LOOP
B	2 1/2	850	64.1	12000	RATED	850/130 RED. STA.
BB	5	130	81.8	12000	RATED	850/130 RED. STA. TO TK. CLEANING HEATER
C	2 1/2	850	53.4	10000	RATED	850 PSIG TO CONTAM EVAP RED STA
CC	4	185	42.0	4190	FULL POWER	HP TURBINE BLEED TO CONTAM EVAP.
D	4	130	91.3	8500	RATED	CONTAM EVAP BY-PASS
DD	4	350	42.5	10000	RATED	RED. V. TO CONTAM EVAP
E	1	850	47.2	1500	RATED	850/140 RED. STA.
F	2	140	57.0	1500	RATED	850/140 RED. VALVE TO WHISTLE
G	1 1/2	850	16.2	1260	RATED	850/143 RED. STA.
H	2	143	47.0	1260	RATED	850/143 RED. VALVE TO ALL AIR EJECTORS
I	1 1/4	143	47.6	570	RATED	143 PSIG TO DIST PLANT AIR EJECTOR
J	1 1/4	143	41.0	490	RATED	143 PSIG TO MN. AIR EJECTORS
K	1	143	28.9	200	RATED	143 PSIG TO AUX AIR EJECTORS
L	1 1/2	143	42.4	690	RATED	143 PSIG TO MN & AUX. AIR EJECTORS
M	2	850	202	20000	RATED	850 PSIG TO UNLOADING VALVE
N	4	7.8	1302	20000	RATED	UNLOADING VALVE TO UNLOADING HEADER
O	3	850	72.0	21000	ASTERN	850/32 RED. STA.
P	8	32	176	21000	ASTERN	850/32 RED VALVE TO AUX. EXH. SYSTEM
Q	1 1/4	143	78.2	935	RATED	143 PSIG TO GLAND SEAL REGULATOR
R	1 1/2	850	17.4	1355	FULL POWER	850/143 RED. STA.
S	2	143	50.5	1355	FULL POWER	850/143 RED. V. TO GL. SEAL & BURNER ATOM
T	1 1/4	143	35.1	420	FULL POWER	143 PSIG TO BURNER ATOM STM.
U	2 1/2	850	58.8	11000	RATED	850 PSIG TO MN FEED PUMP
V	2 1/2	205	101	4190	RATED	HP TURBINE BLEED

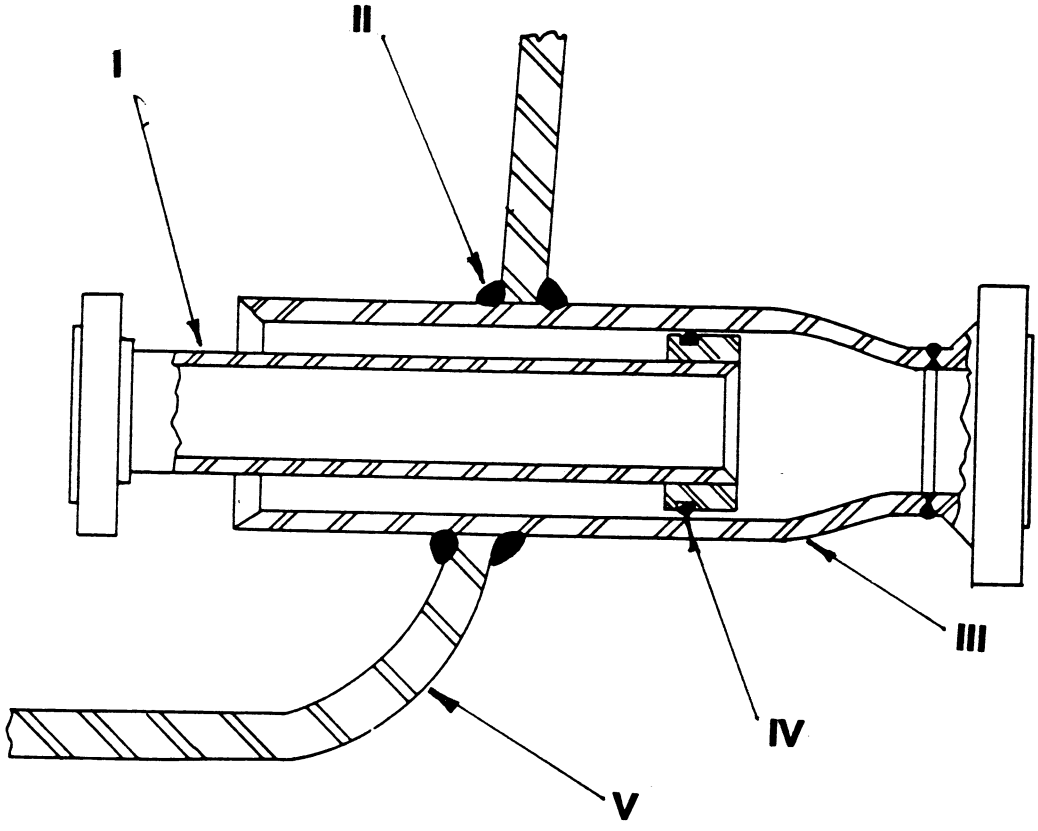
I
II
III
IV
V

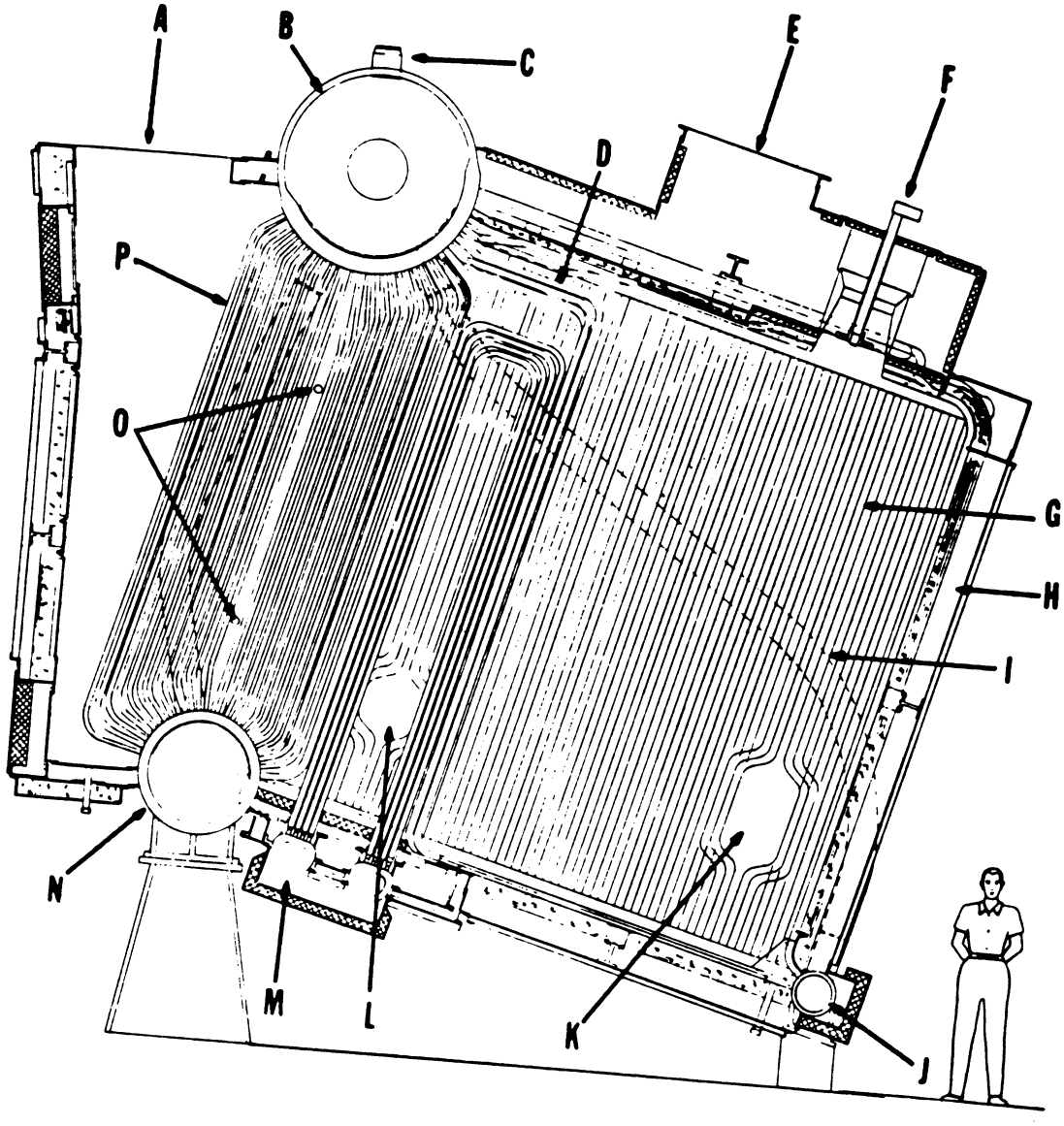
A
B
C
D
E
F
G
H
I
J
K
L
M
N
O
P

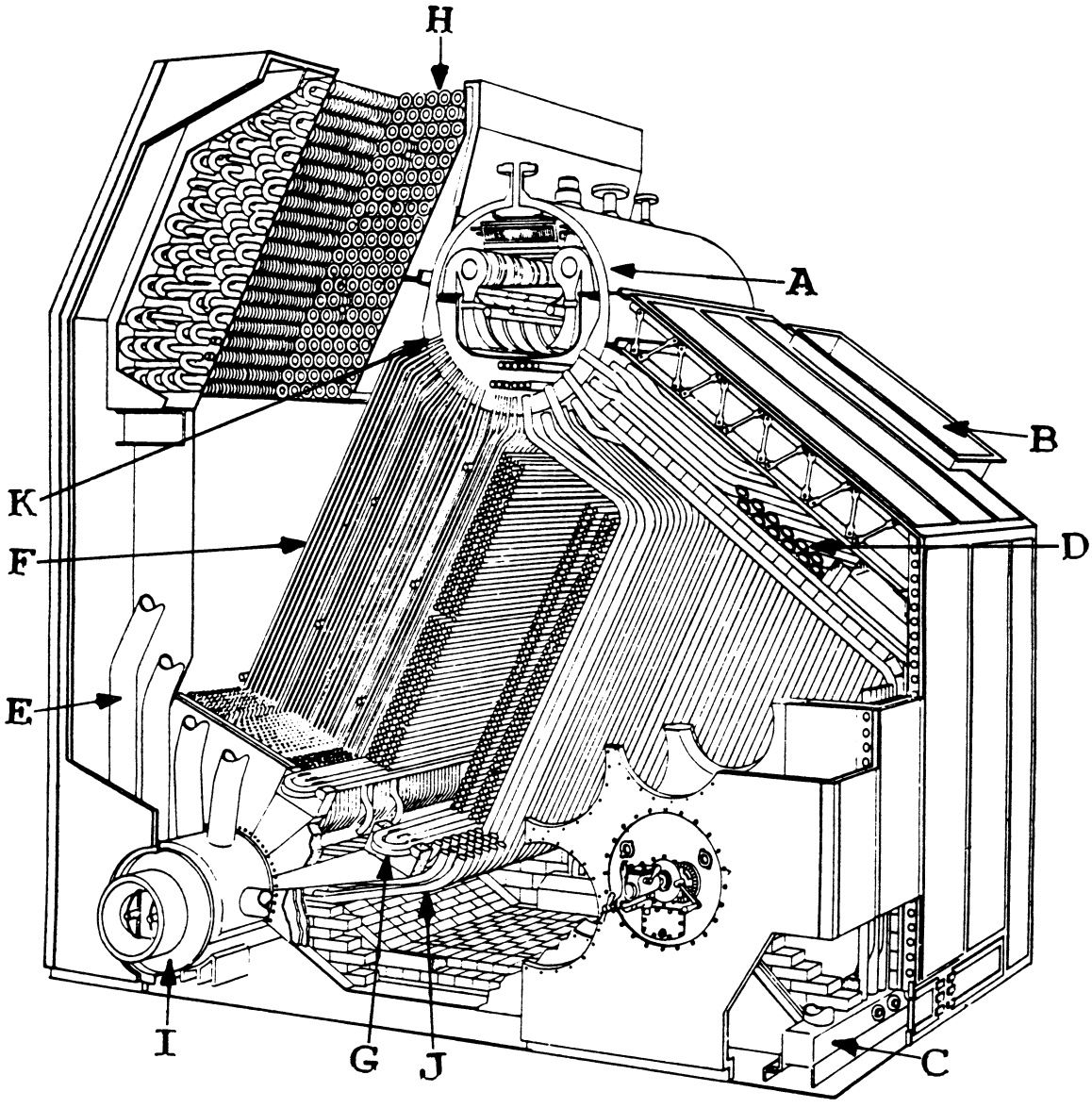
H
A
B
K
F
D
E
I
G
J
C

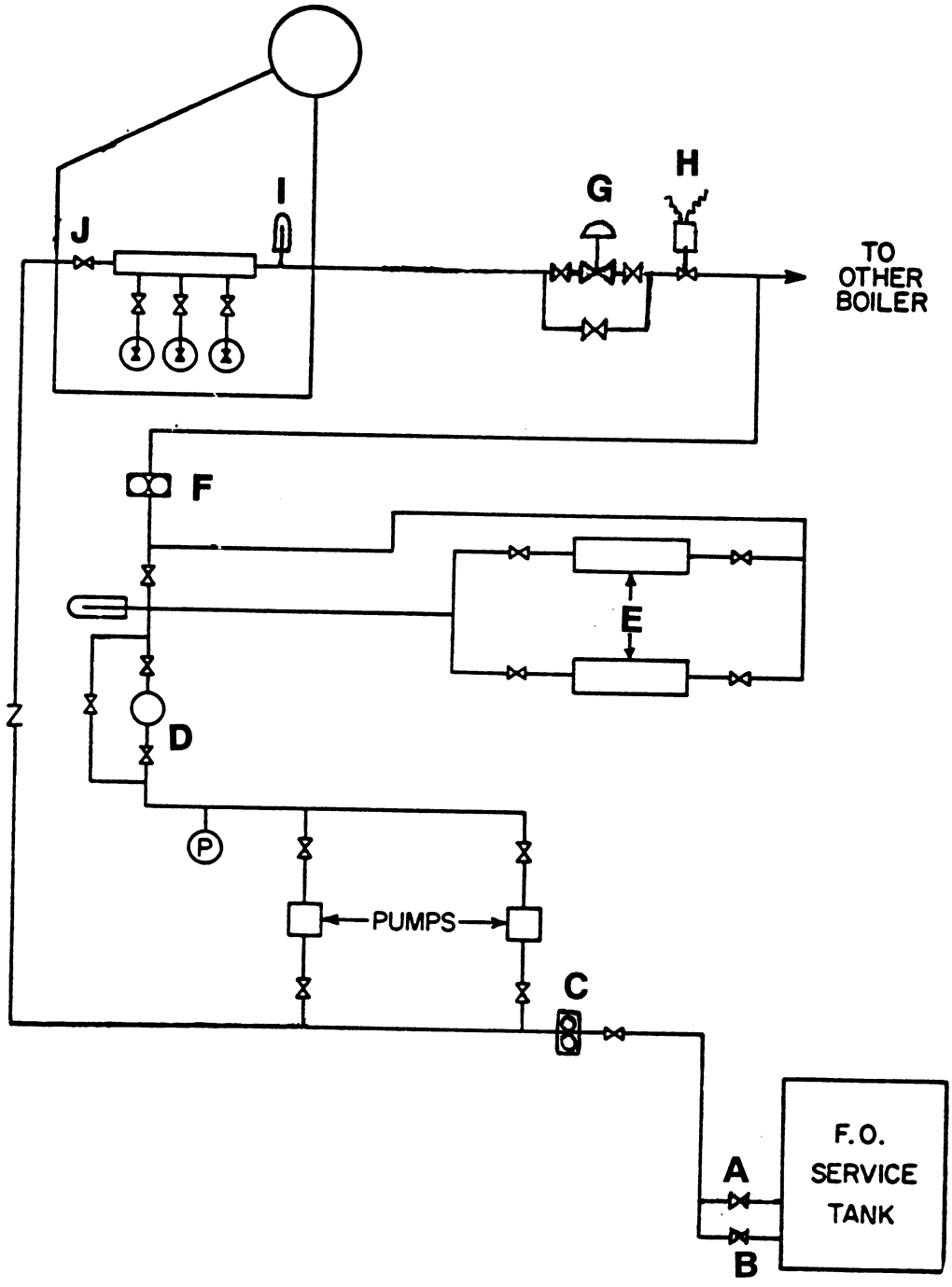
J
I
G
H
TO
OTHER
BOILER
F
E
D
P
PUMPS
C
A
B
F.O.
SERVICE
TANK

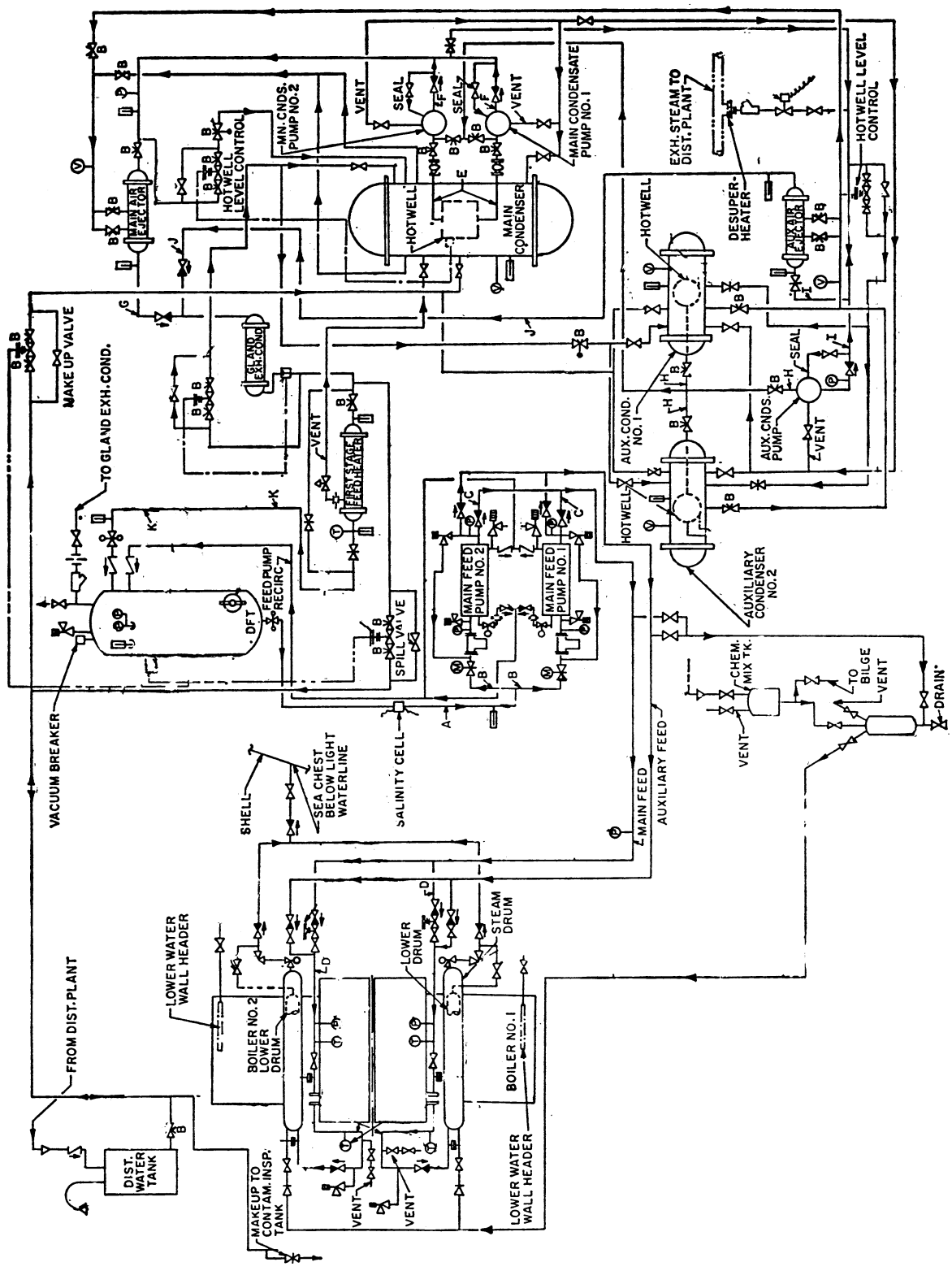
MAIN AIR EJECTOR
HOTWELL LEVEL CONTROL
MN. CNDS. PUMP NO.2
VENT
SEAL
SEAL
VENT
MAIN CONDENSATE PUMP NO.1
HOTWELL
MAIN CONDENSER
EXH. STEAM TO DIST. PLANT
DESUPER-HEATER
HOTWELL LEVEL CONTROL
HOTWELL
AUX. AIR EJECTOR
MAKE UP VALVE
GLAND EXH. COND.
TO GLAND EXH. COND.
VENT
FIRST STAGE FEED HEATER
AUX. COND. NO.1
SEAL
AUX. CNDS. PUMP
VENT
HOTWELL
AUXILIARY CONDENSER NO.2
DFT
FEED PUMP RECIRC.
SPILL VALVE
MAIN FEED PUMP NO.2
MAIN FEED PUMP NO.1
CHEM. MIX TK.
TO BILGE VENT
DRAIN
VENT
VACUUM BREAKER
SHELL
SEA CHEST BELOW LIGHT WATERLINE
SALINITY CELL
MAIN FEED
AUXILIARY FEED
LOWER WATER WALL HEADER
BOILER NO.2 LOWER DRUM
LOWER DRUM
STEAM DRUM
BOILER NO.1
FROM DIST. PLANT
DIST. WATER TANK
MAKEUP TO CONTAM. INSP. TANK
VENT
VENT
LOWER WATER WALL HEADER

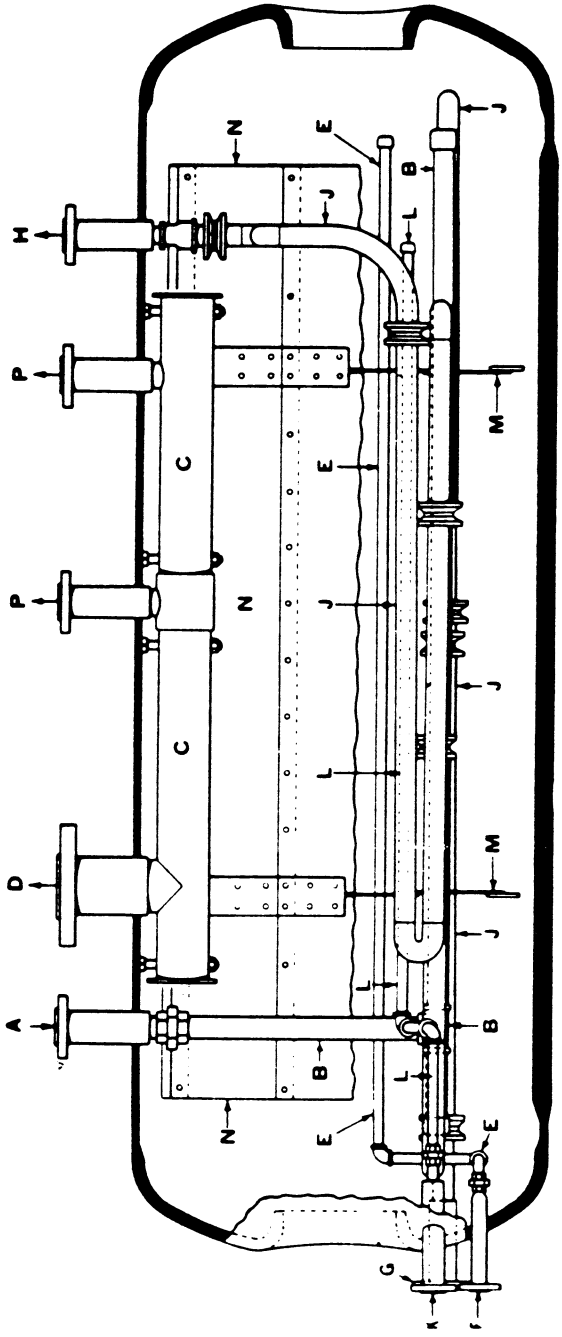

LONGITUDINAL SECTIONAL ELEVATION

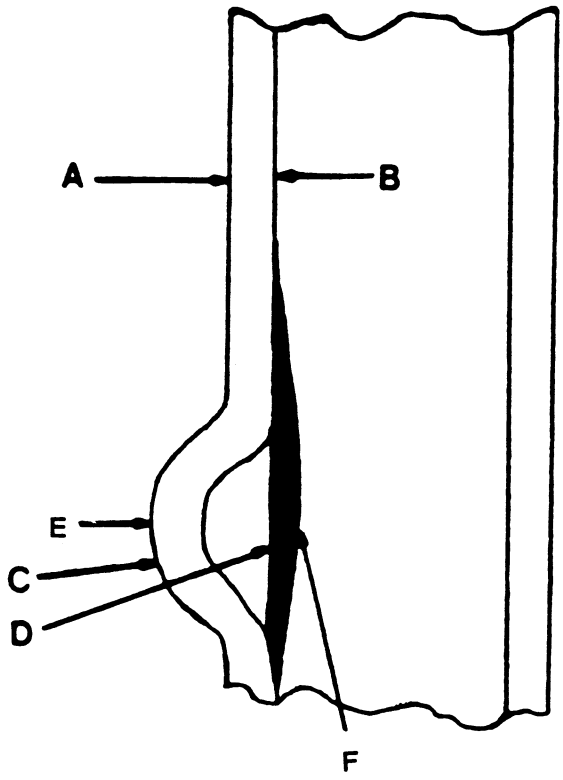
A
B
E
C
D
F

SG-0013

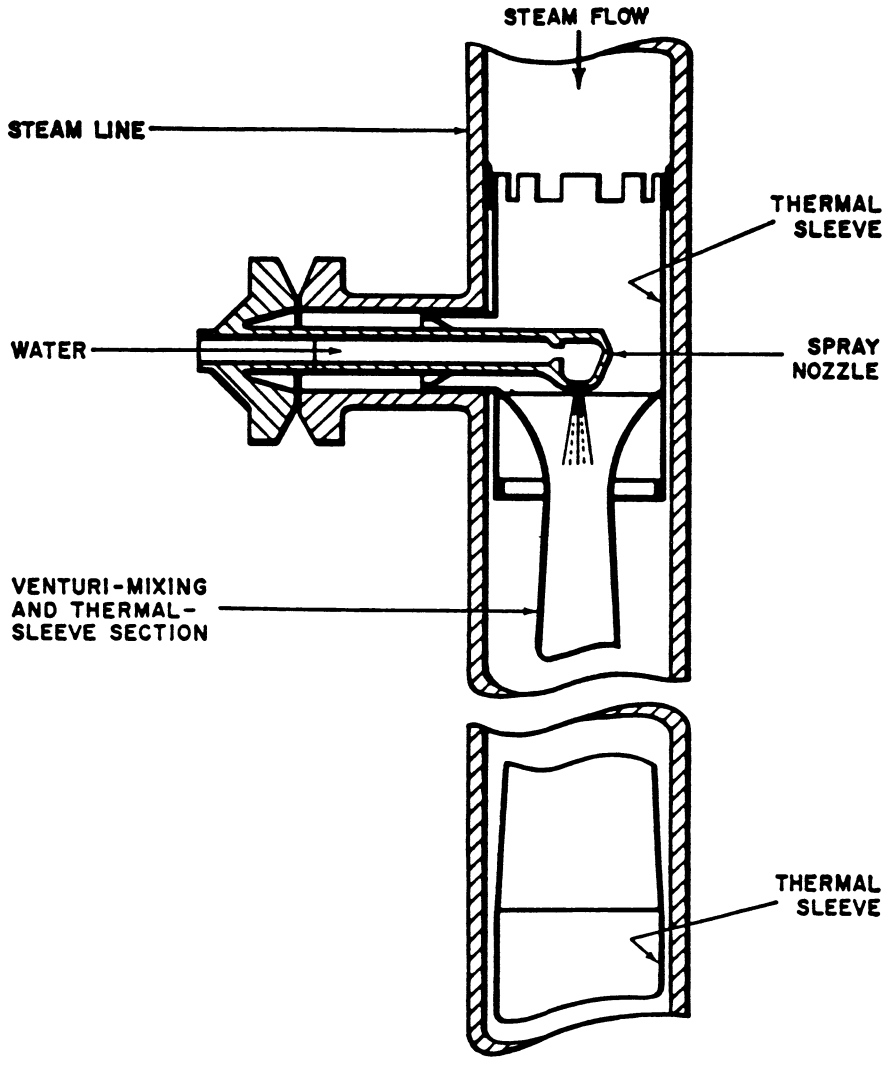
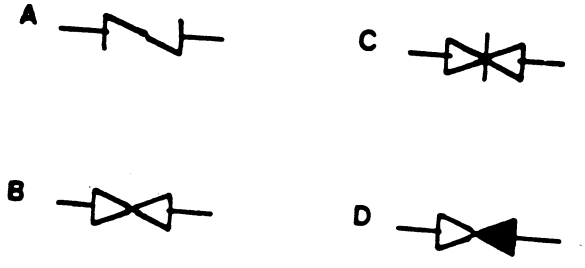
SG-0014