CHAPTER 5 SAFETY

SF-0001

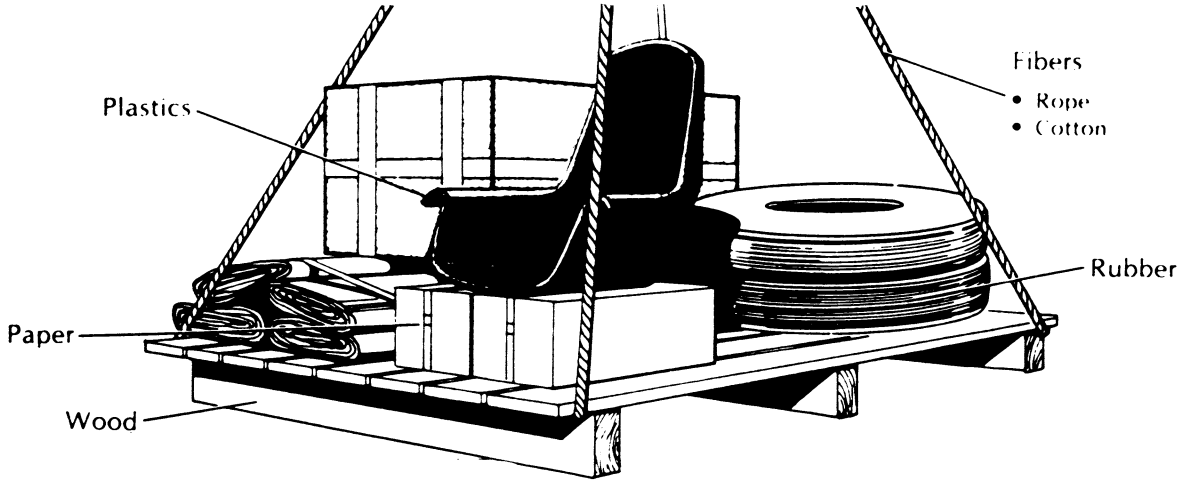

SF-0002

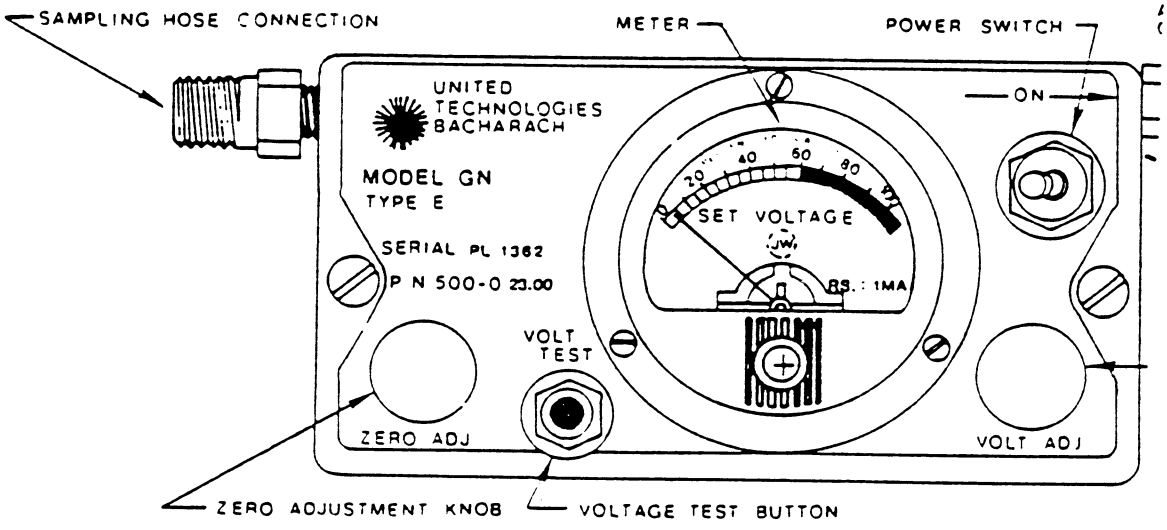

SF-0003

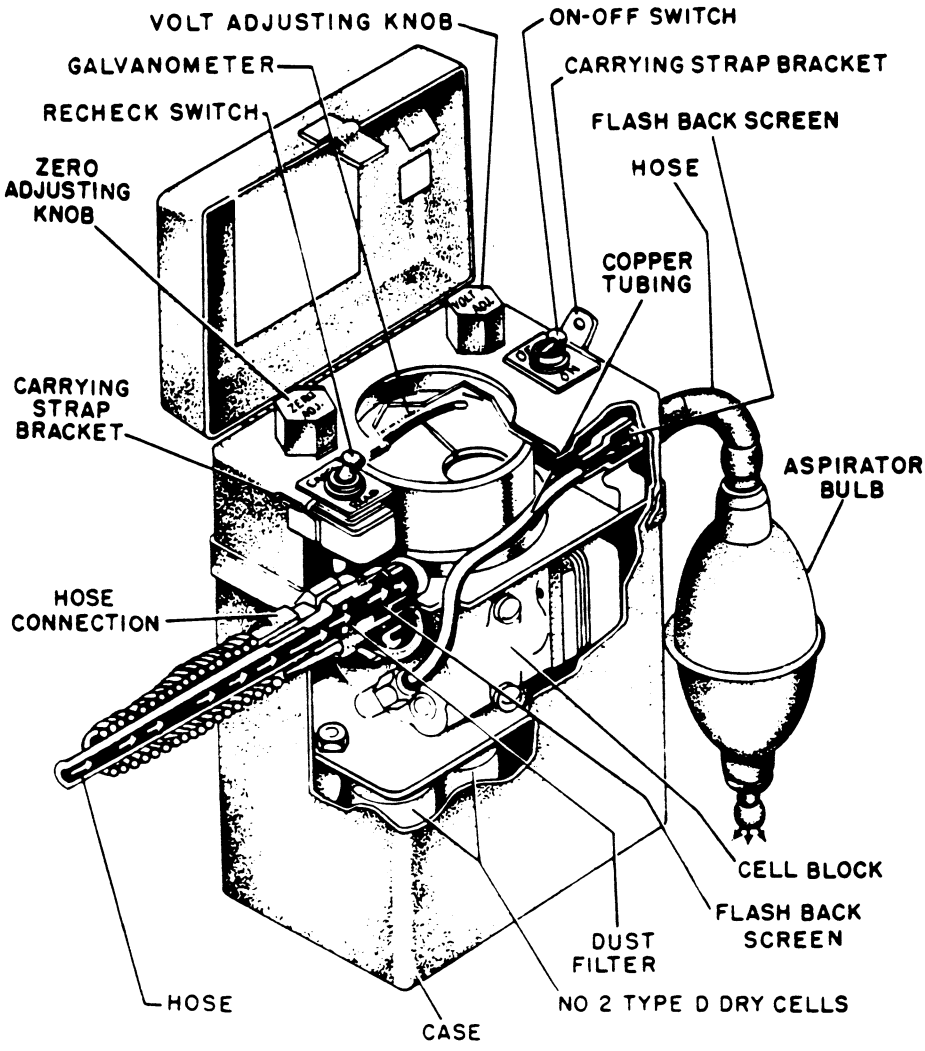

SF-0004

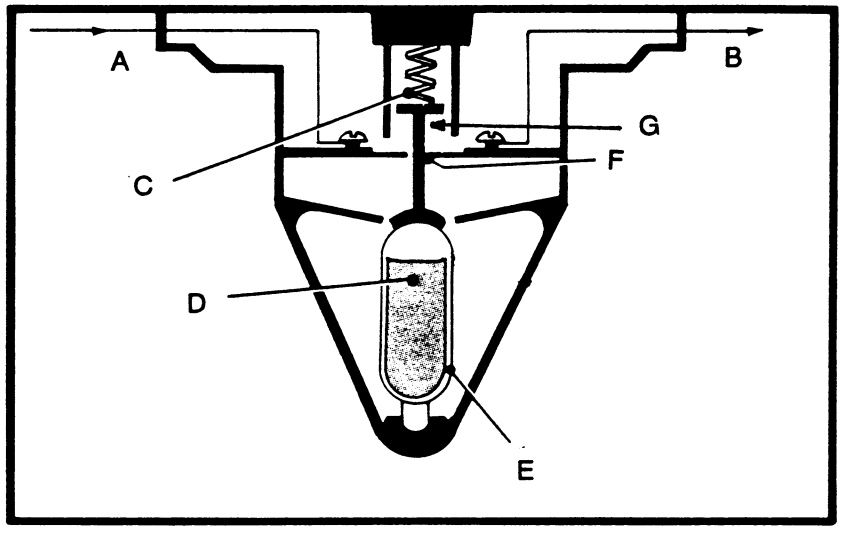

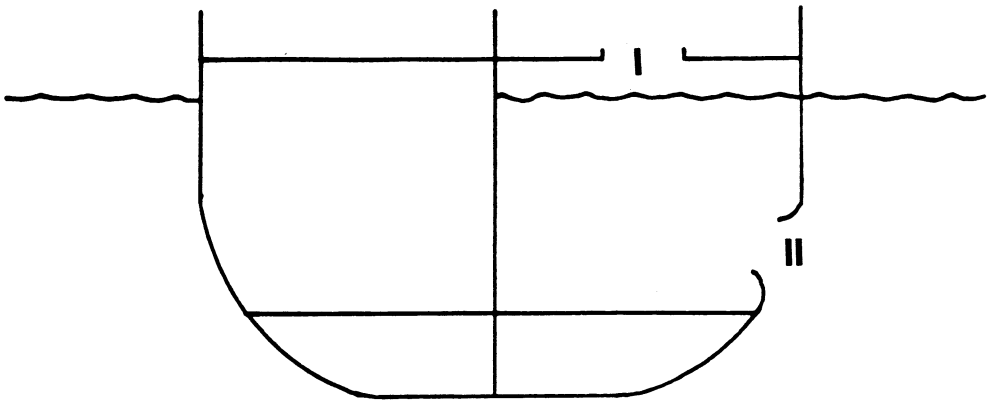
I
II

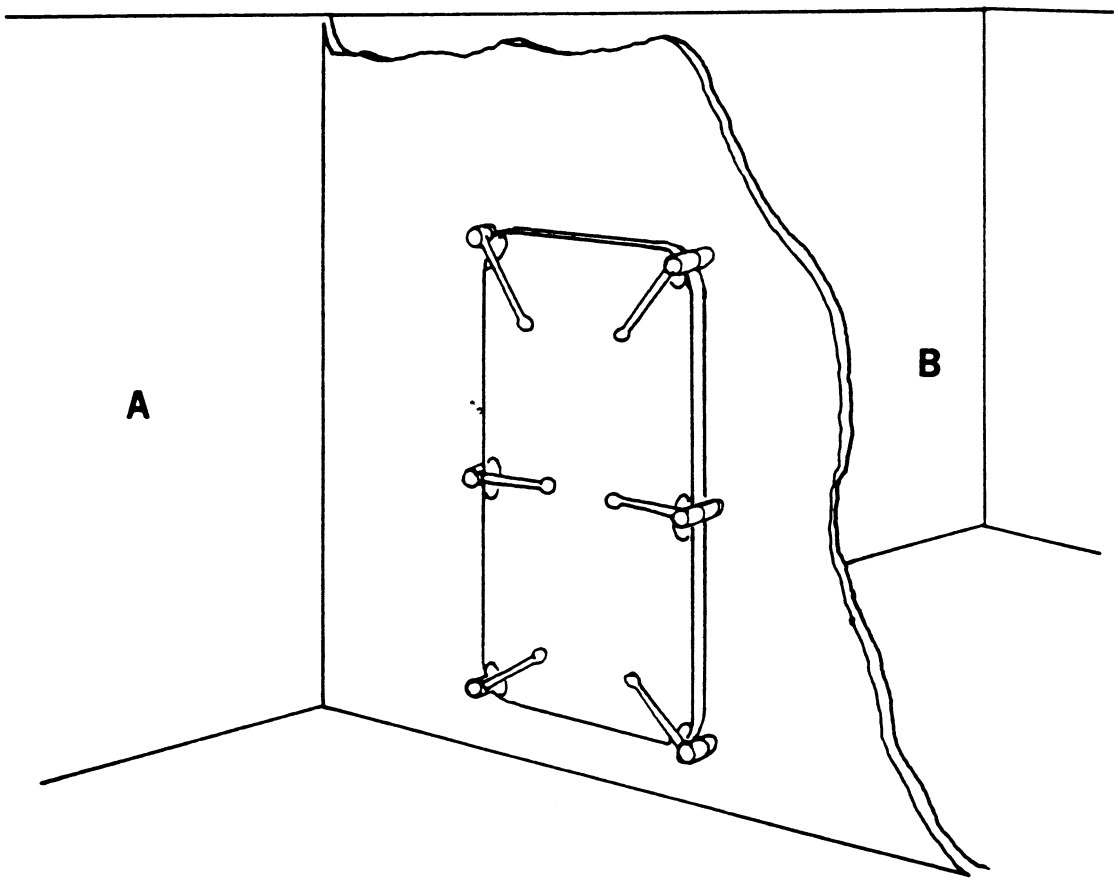
A
B

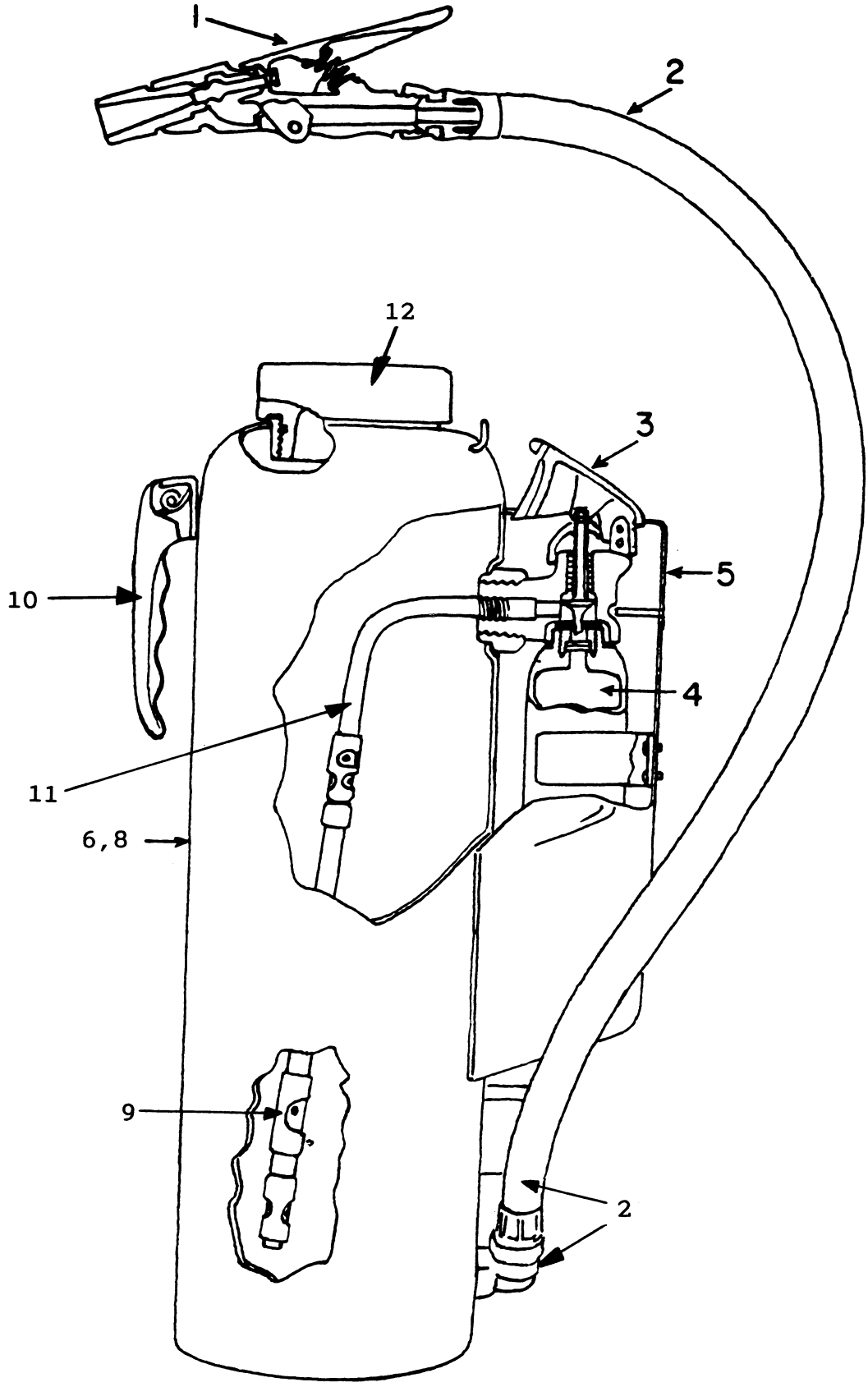
1
2
12
3
5
10
4
11
6,8
9
2

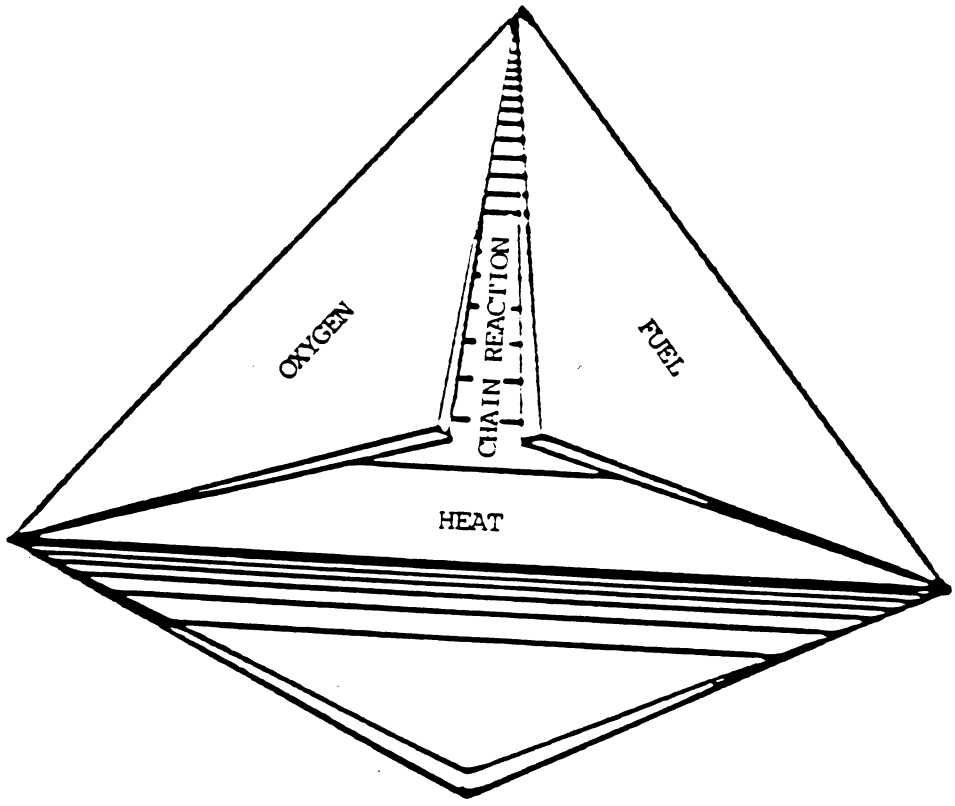
OXYGEN
CHAIN REACTION
FUEL
HEAT

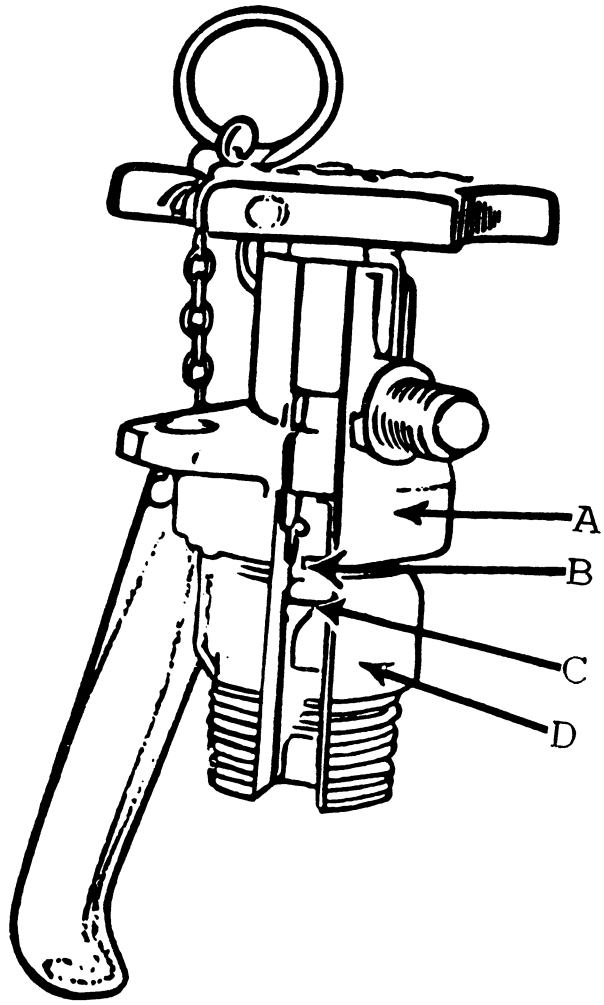
A
B
C
D

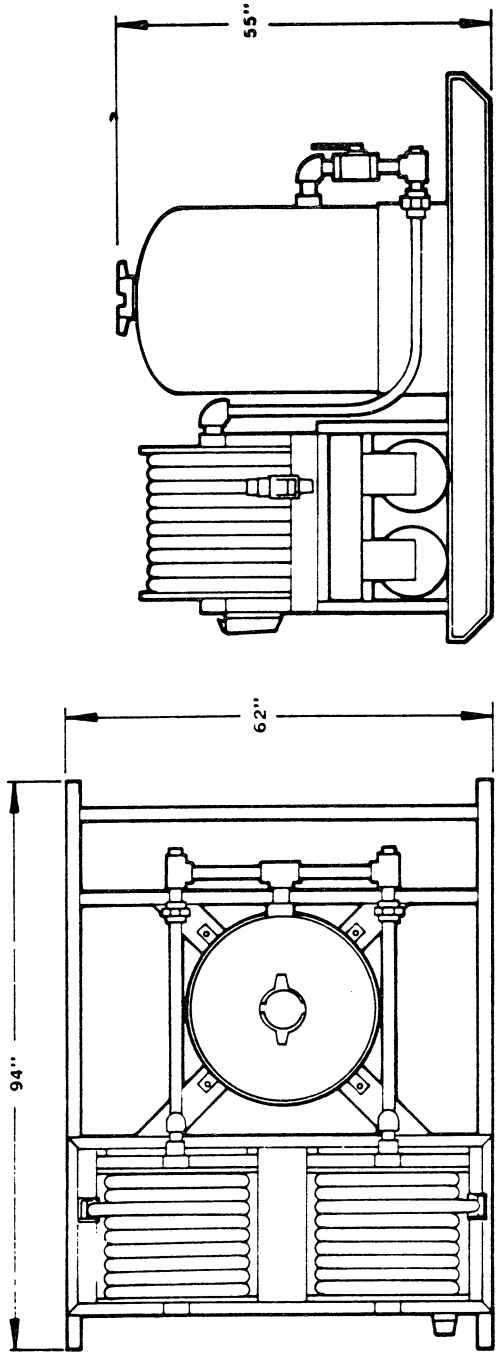
55"
62"
94"

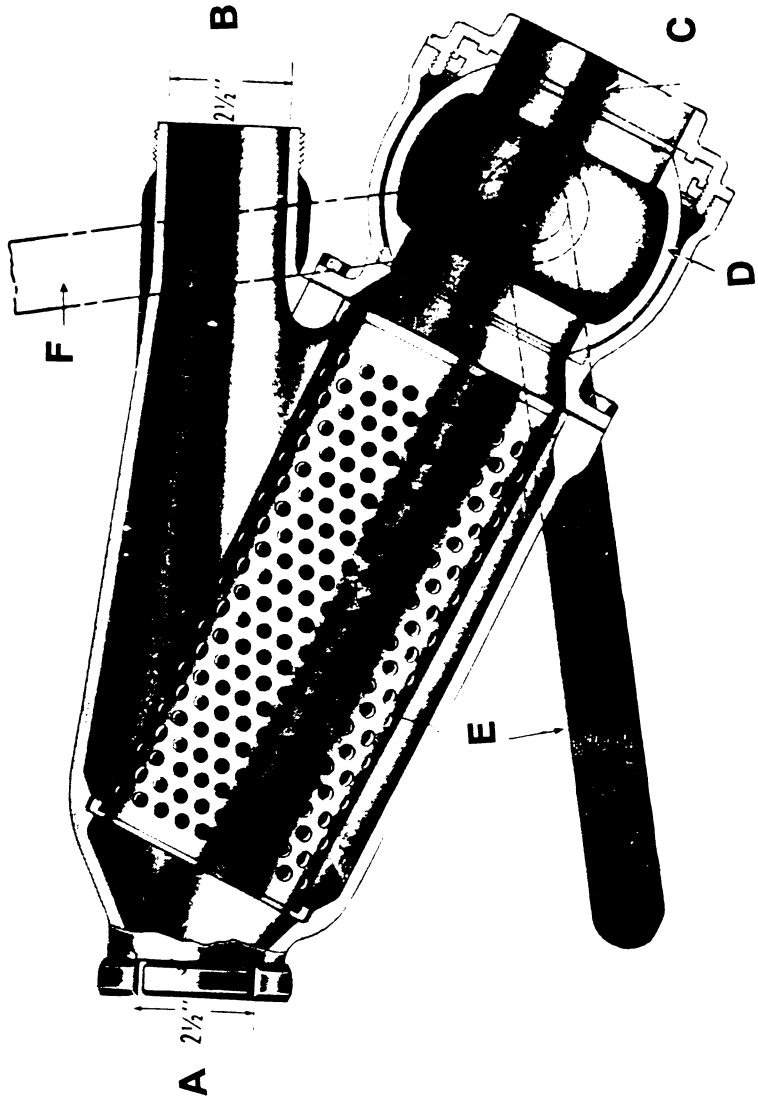
A
2½"
B
2½"
C
D
E
F

SF-0011

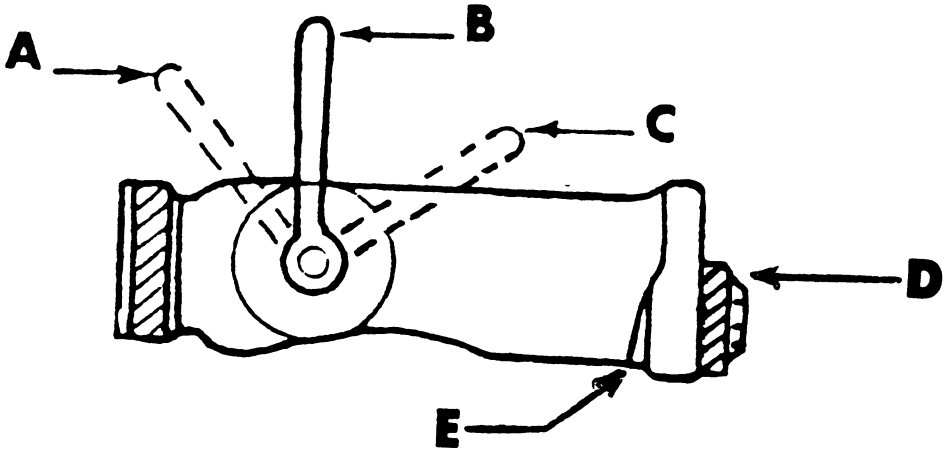

SF-0012

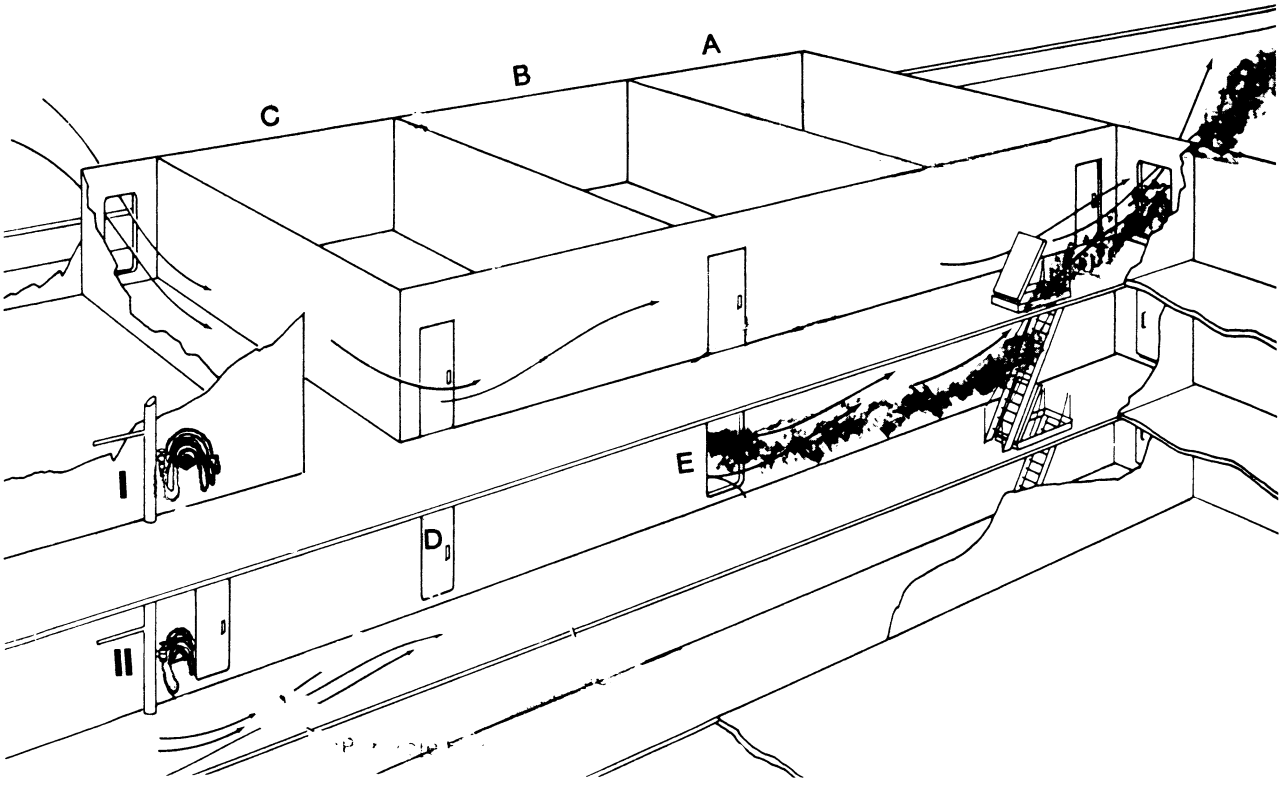

FIG. 1

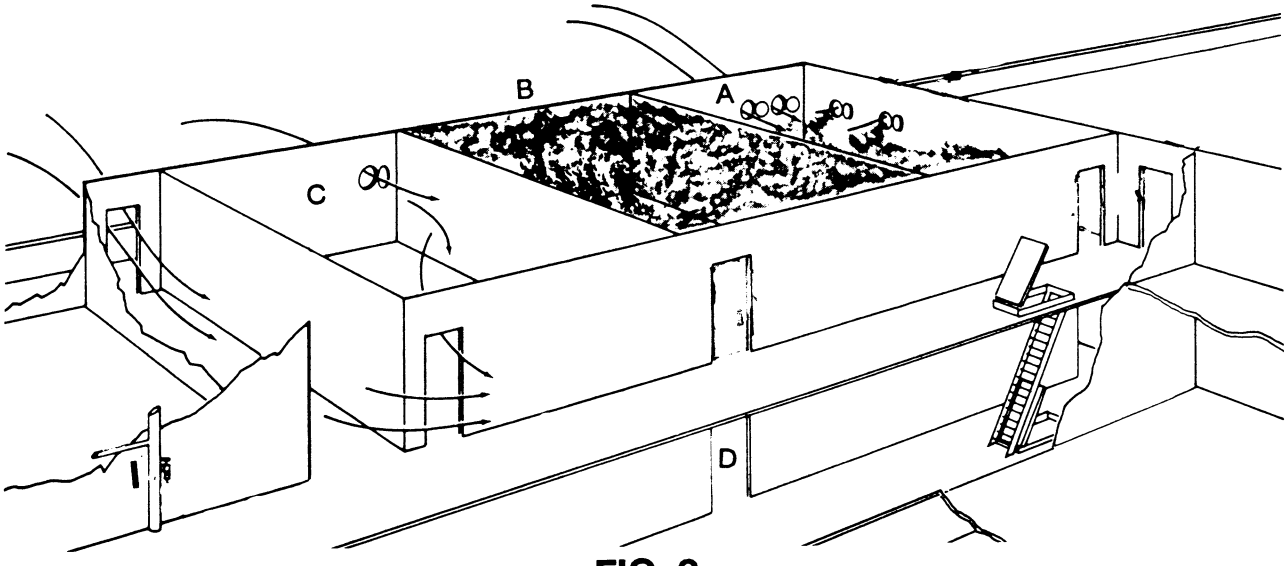

FIG. 2

CYLINDER SERIAL NO.	TARE WEIGHT	GROSS WEIGHT	DATE	INSPECTOR
101	175	275	5-5-81	J.P.
102	174	269	5-5-81	J.P.
103	176	264	5-5-81	J.P.
104	176	268	5-5-81	J.P.
105	176	275	5-5-81	J.P.
106	174	265	5-5-81	J.P.
107	175	272	5-5-81	J.P.
108	176	265	5-5-81	J.P.
109	174	271	5-5-81	J.P.
110	175	272	5-5-81	J.P.

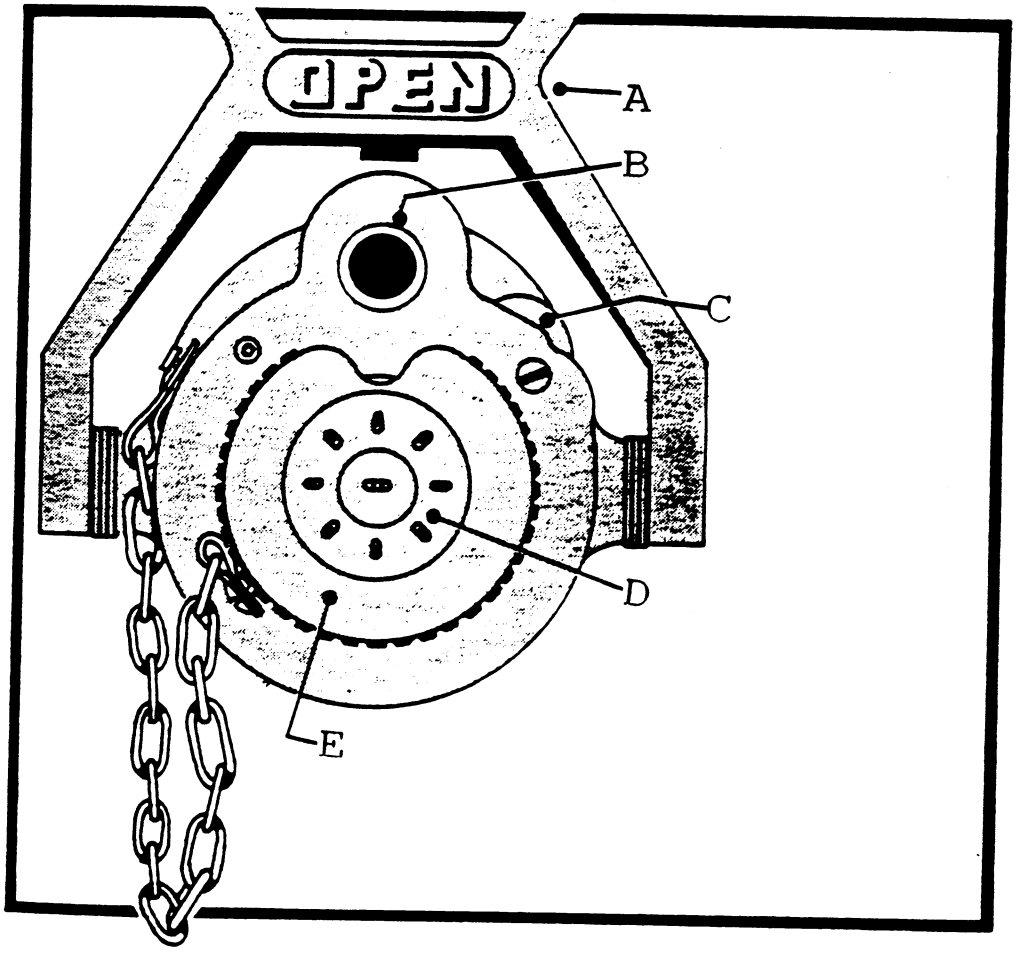
OPEN
A
B
C
D
E

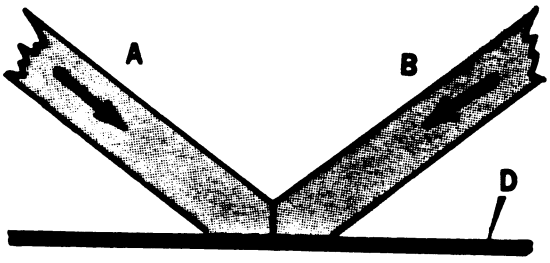

A

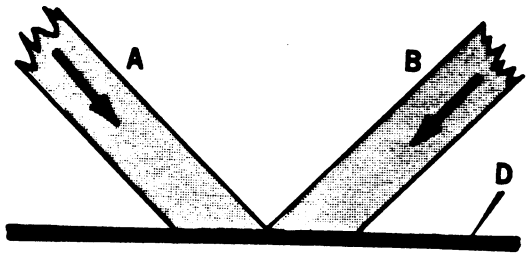

B

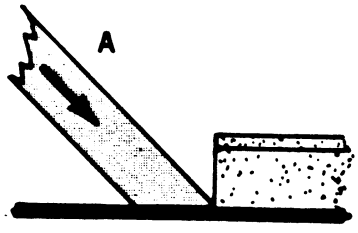

C

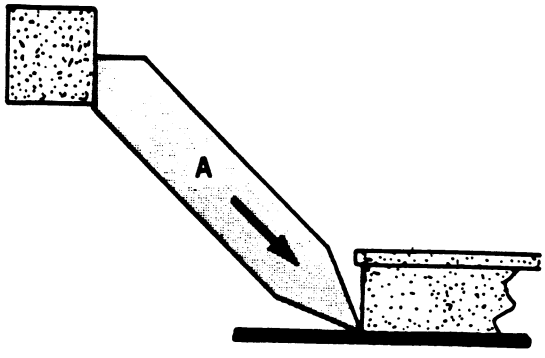

D

SF-0017

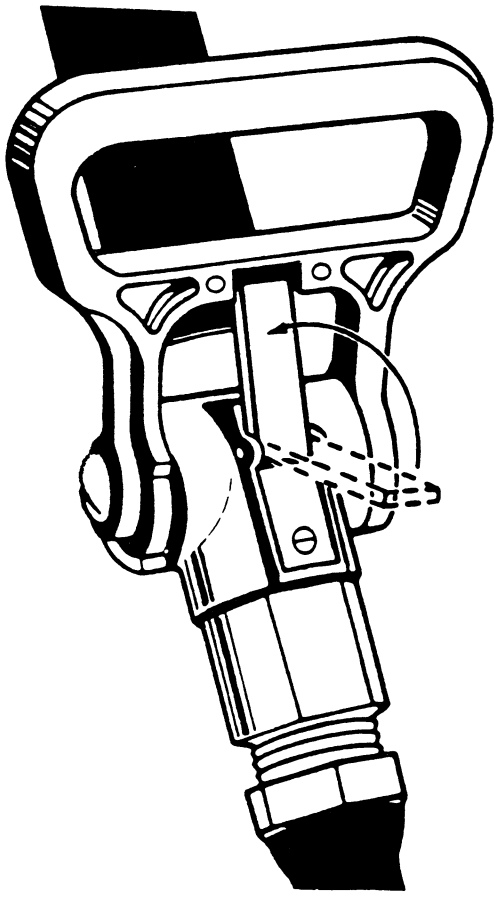

SF-0018

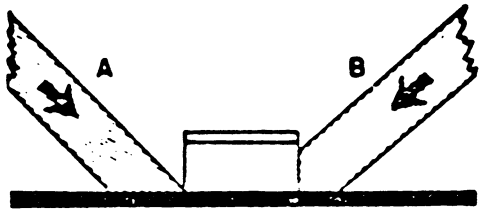

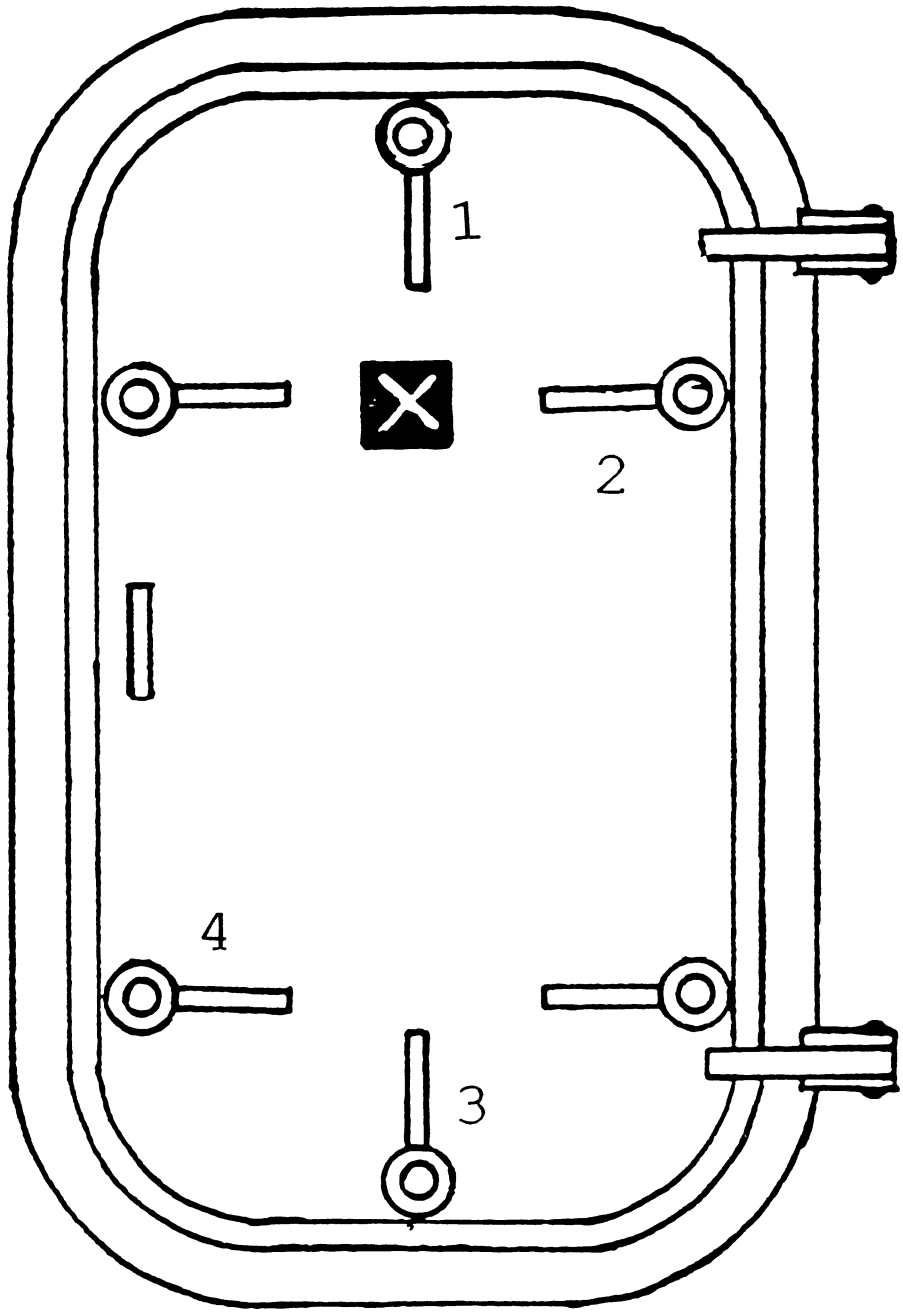
1
2
4
3

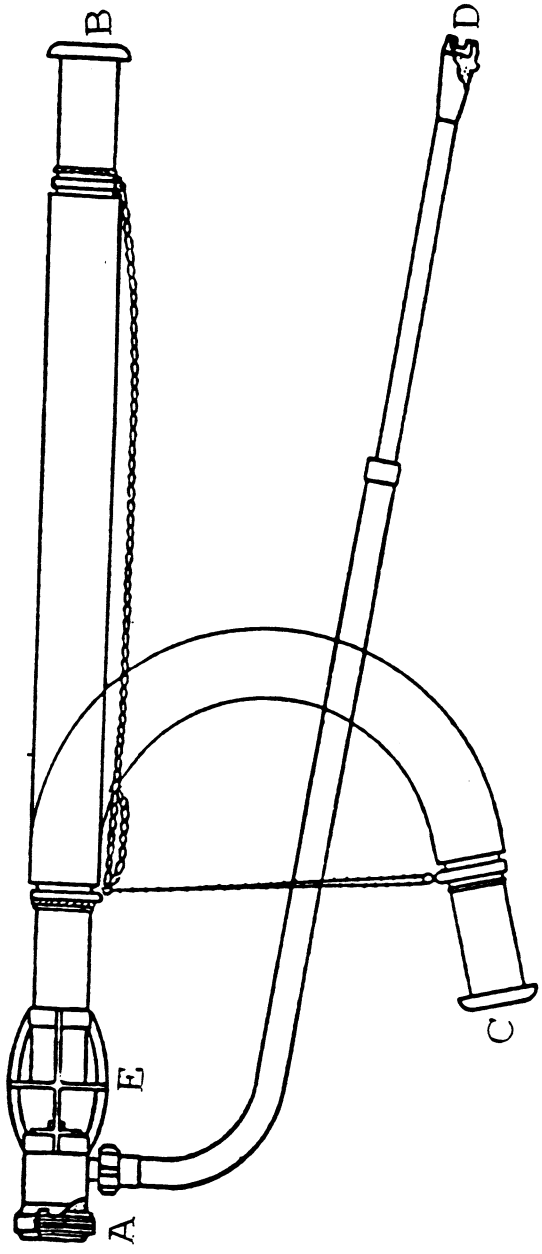
A
E
B
C
D

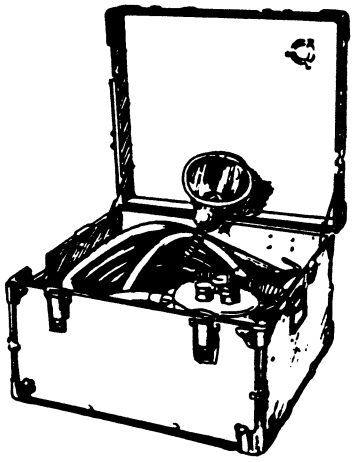

A

B

C

D

SF-0022

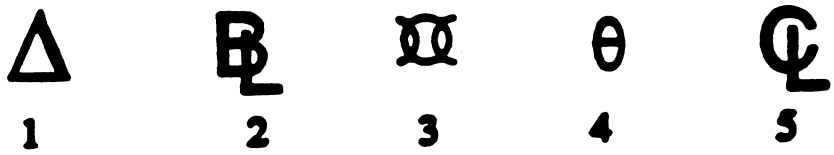

SF-0023

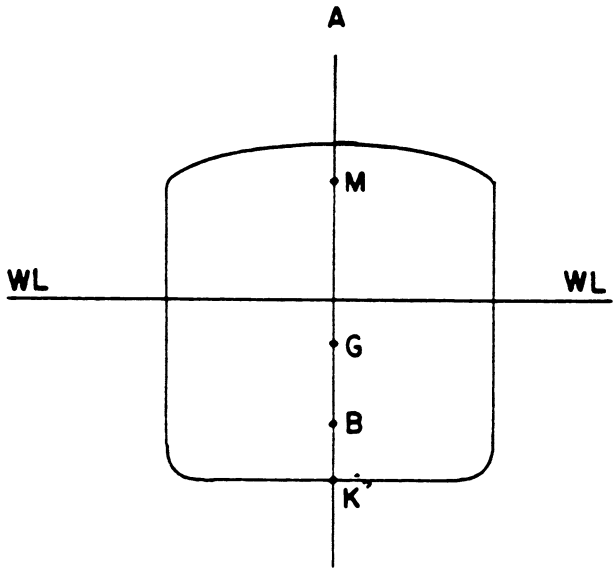

SF-0024
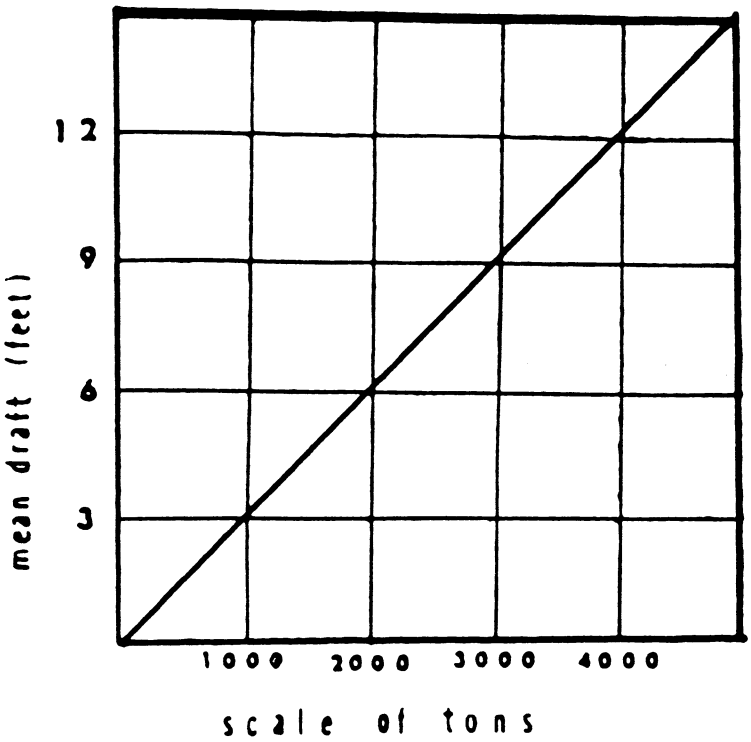
DIAGRAM A