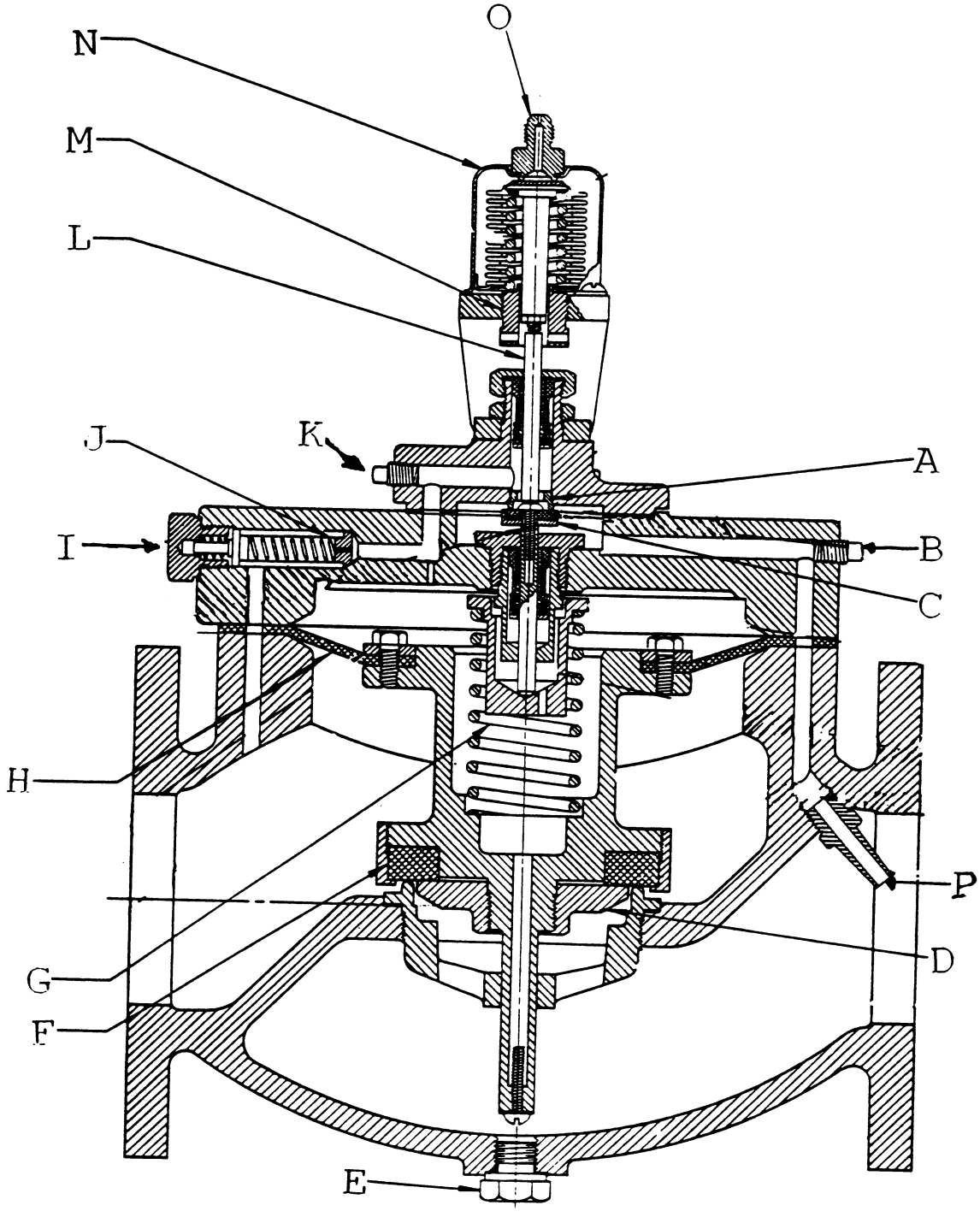

(COURTESY OF MARSH EQUIPMENT COMPANY)

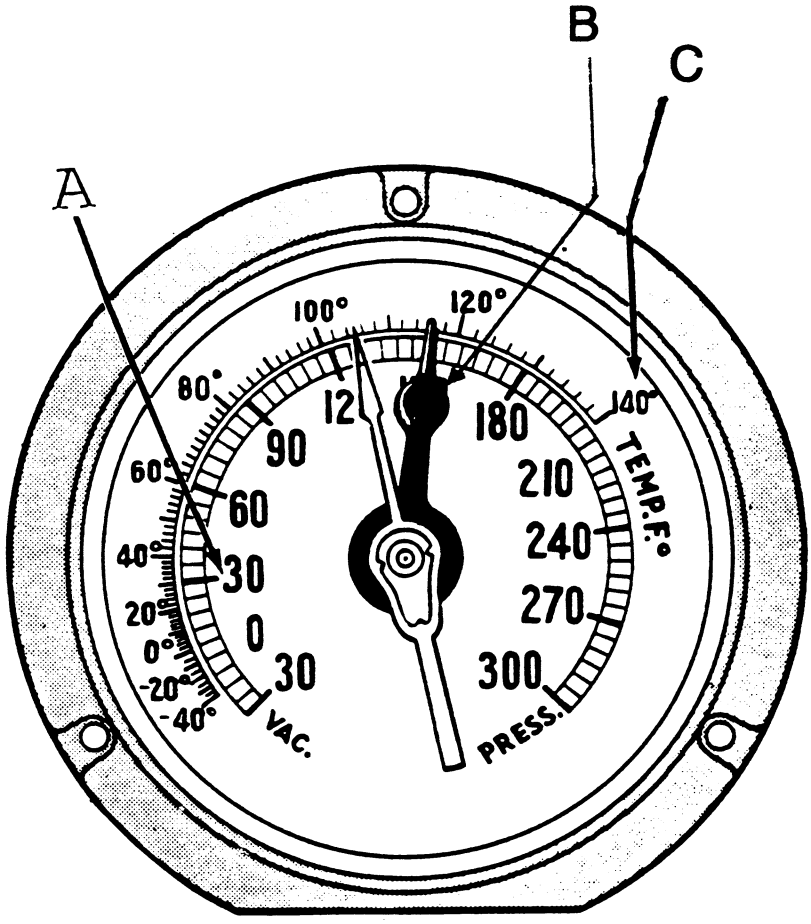
A
B
C
100°
120°
80°
140°
60°
40°
20°
0°
-20°
-40°
12
90
60
30
0
30
180
210
240
270
300
TEMP.F.°
VAC.
PRESS.

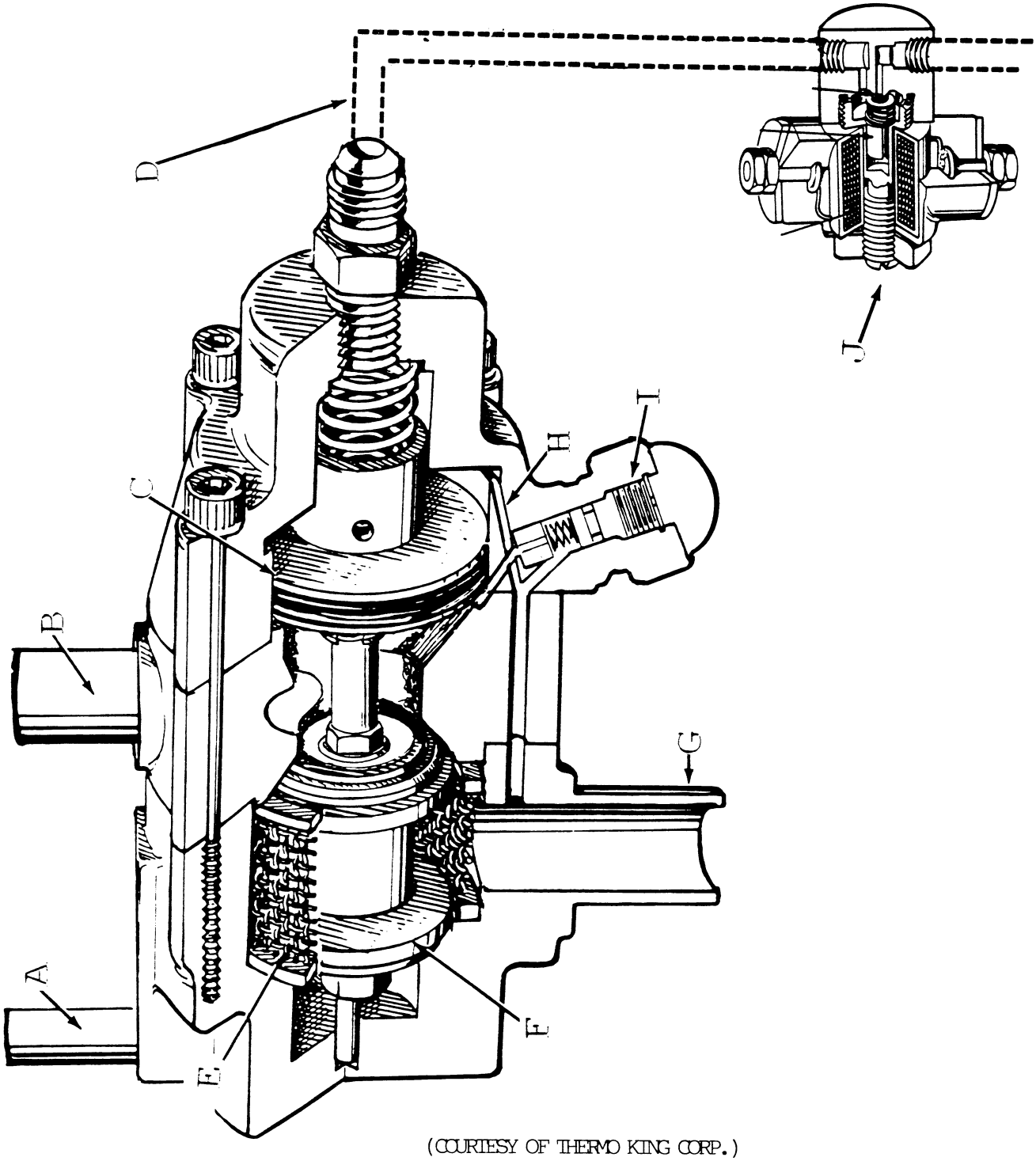

(COURTESY OF THERMO KING CORP.)

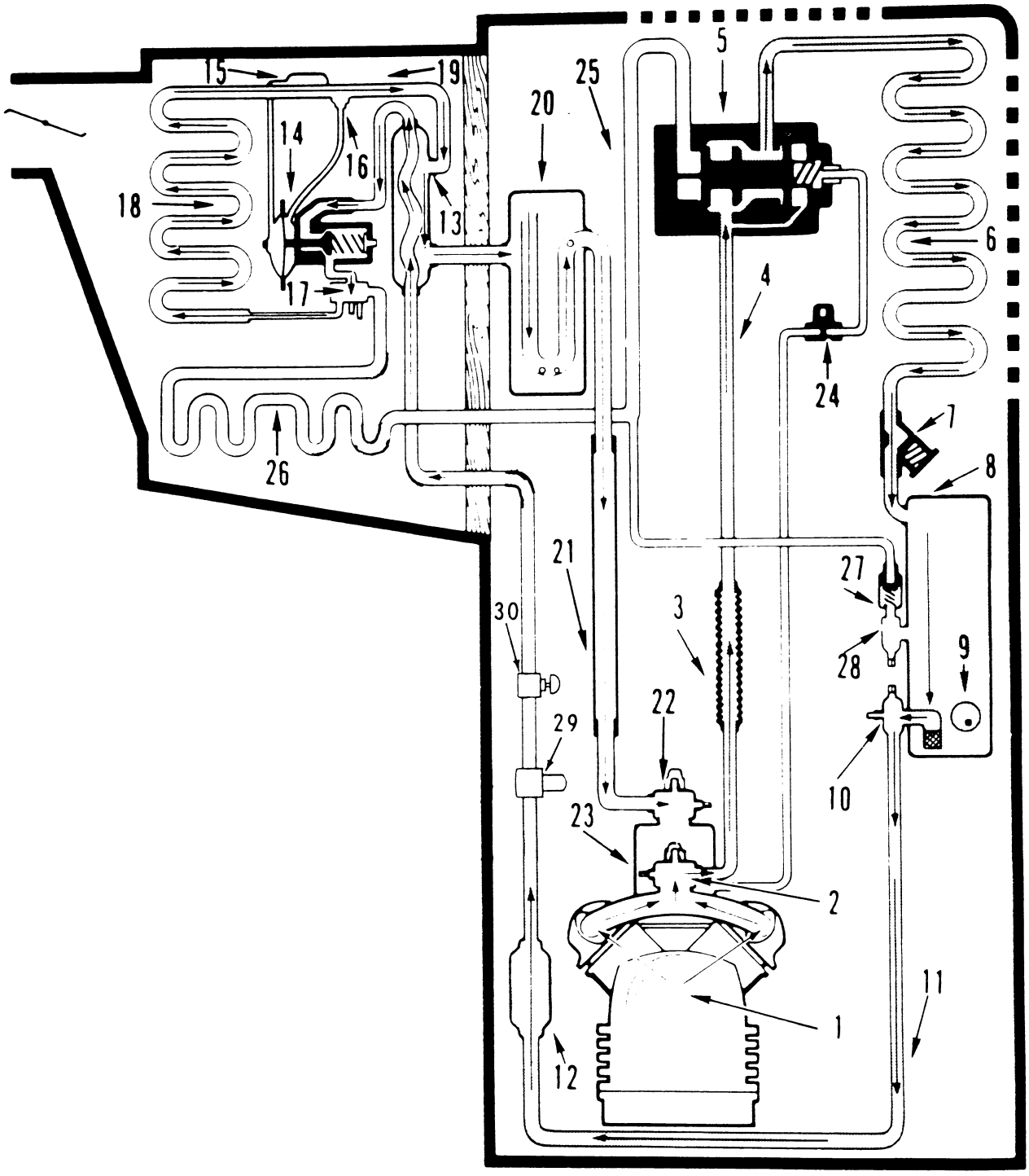

(COURTESY OF THERMO KING CORP.)

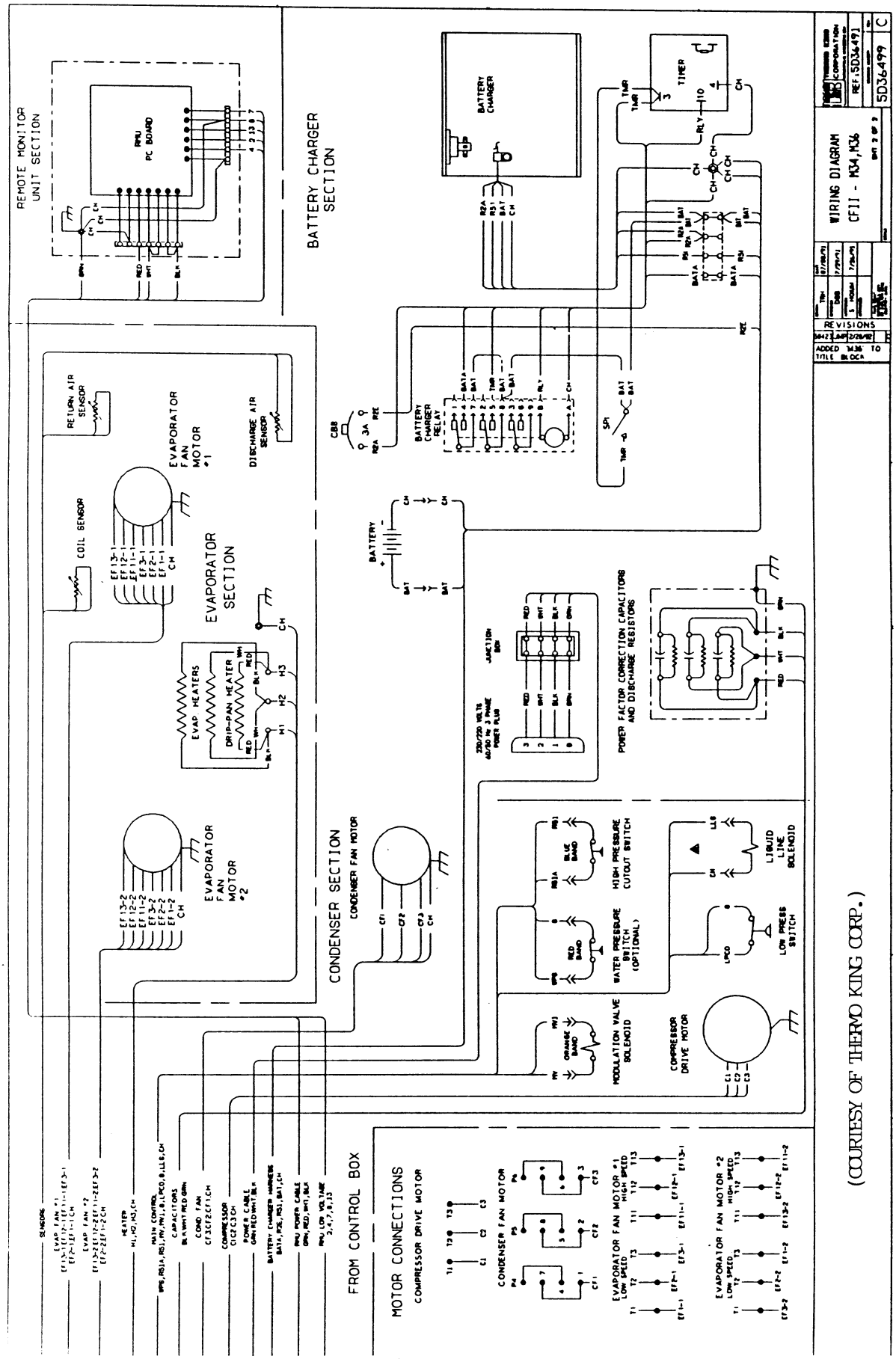

(COURTESY OF THERMO KING CORP.)

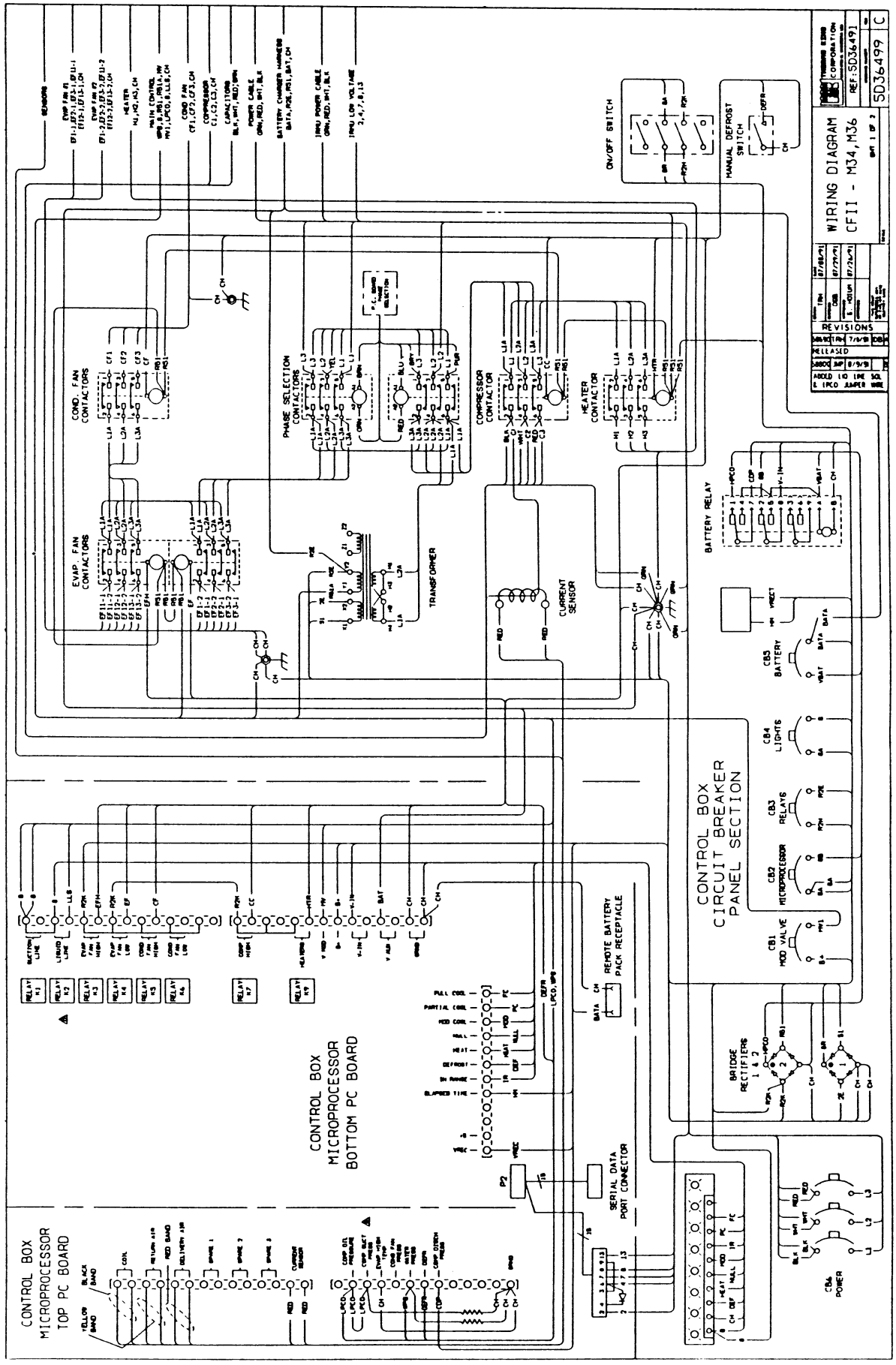

(COURTESY OF THERMO KING CORP.)

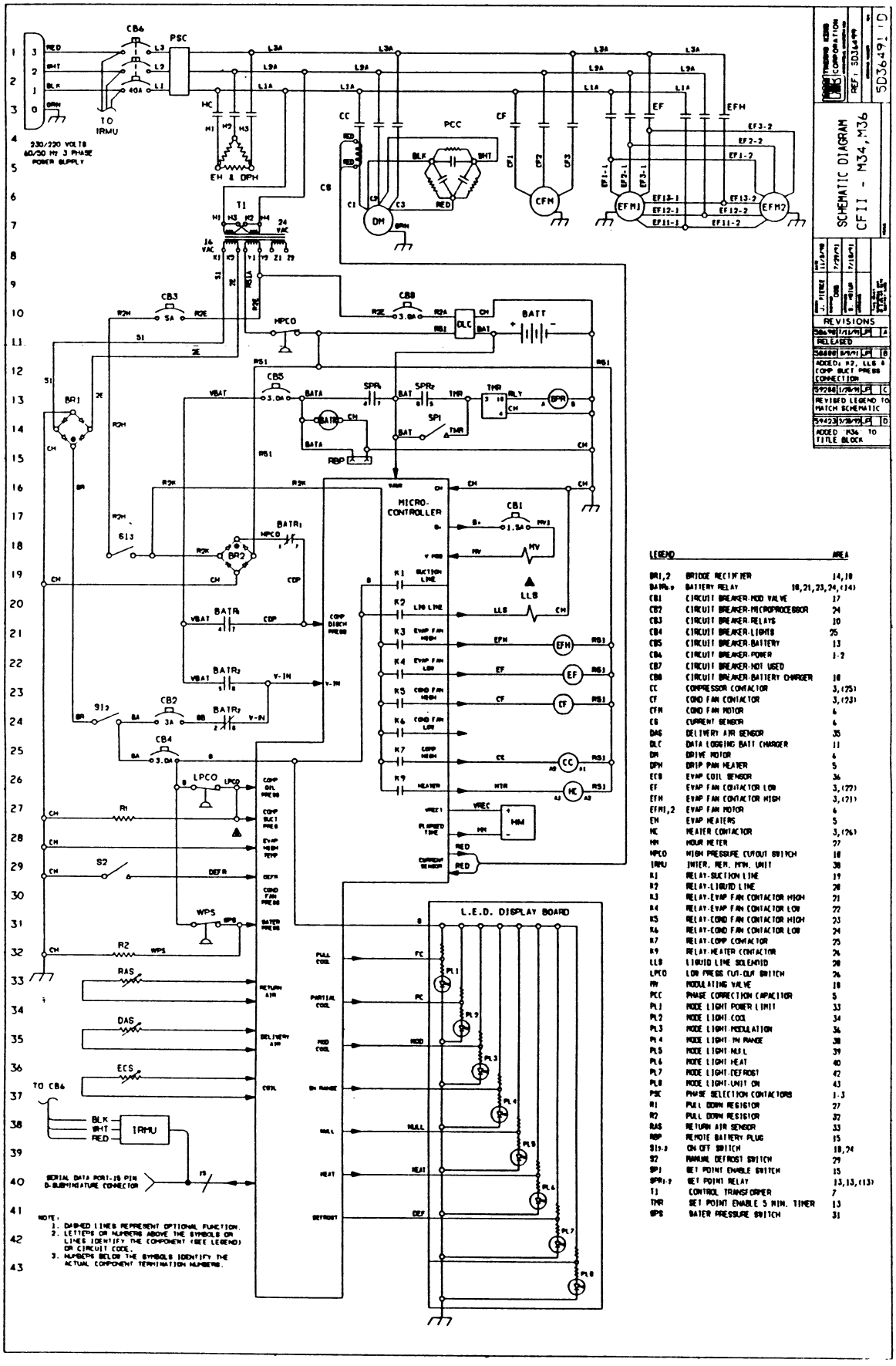

LEGEND		AREA
BR1,2	BRIDGE RECTIFIER	14,18
BATR1,2	BATTERY RELAY	18,21,23,24,(14)
CB1	CIRCUIT BREAKER-MOD VALVE	17
CB2	CIRCUIT BREAKER-MICROPROCESSOR	24
CB3	CIRCUIT BREAKER-RELAYS	10
CB4	CIRCUIT BREAKER-LIGHTS	25
CB5	CIRCUIT BREAKER-BATTERY	13
CB6	CIRCUIT BREAKER-POWER	1-2
CB7	CIRCUIT BREAKER-NOT USED	
CB8	CIRCUIT BREAKER-BATTERY CHARGER	18
CC	COMPRESSOR CONTACTOR	3,(25)
CF	COND FAN CONTACTOR	3,(23)
CFM	COND FAN MOTOR	6
CS	CURRENT SENSOR	6
DAS	DELIVERY AIR SENSOR	35
DLC	DATA LOGGING BATT CHARGER	11
DM	DRIVE MOTOR	6
DPH	DRIP PAN HEATER	5
ECS	EVAP COIL SENSOR	36
EF	EVAP FAN CONTACTOR LOW	3,(22)
EFH	EVAP FAN CONTACTOR HIGH	3,(21)
EFM1,2	EVAP FAN MOTOR	6
EH	EVAP HEATERS	5
HC	HEATER CONTACTOR	3,(26)
HM	HOUR METER	27
HPCO	HIGH PRESSURE CUTOUT SWITCH	18
IRMU	INTER. REM. MON. UNIT	38
K1	RELAY-SUCTION LINE	19
K2	RELAY-LIQUID LINE	20
K3	RELAY-EVAP FAN CONTACTOR HIGH	21
K4	RELAY-EVAP FAN CONTACTOR LOW	22
K5	RELAY-COND FAN CONTACTOR HIGH	23
K6	RELAY-COND FAN CONTACTOR LOW	24
K7	RELAY-COMP CONTACTOR	25
K9	RELAY-HEATER CONTACTOR	26
LLS	LIQUID LINE SOLENOID	20
LPCO	LOW PRESS CUT-OUT SWITCH	26
MV	MODULATING VALVE	18
PCC	PHASE CORRECTION CAPACITOR	5
PL1	MODE LIGHT-POWER LIMIT	33
PL2	MODE LIGHT-COOL	34
PL3	MODE LIGHT-MODULATION	36
PL4	MODE LIGHT-IN RANGE	38
PL5	MODE LIGHT-NULL	39
PL6	MODE LIGHT-HEAT	40
PL7	MODE LIGHT-DEFROST	42
PL8	MODE LIGHT-UNIT ON	43
PSC	PHASE SELECTION CONTACTORS	1-3
R1	PULL DOWN RESISTOR	27
R2	PULL DOWN RESISTOR	32
RAS	RETURN AIR SENSOR	33
RBP	REMOTE BATTERY PLUG	15
S1,2	ON OFF SWITCH	18,24
S2	MANUAL DEFROST SWITCH	29
SP1	SET POINT ENABLE SWITCH	15
SPR1,2	SET POINT RELAY	13,13,(13)
T1	CONTROL TRANSFORMER	7
TMR	SET POINT ENABLE 5 MIN. TIMER	13
WPS	WATER PRESSURE SWITCH	31

(COURTESY OF THERMO KING CORP.)

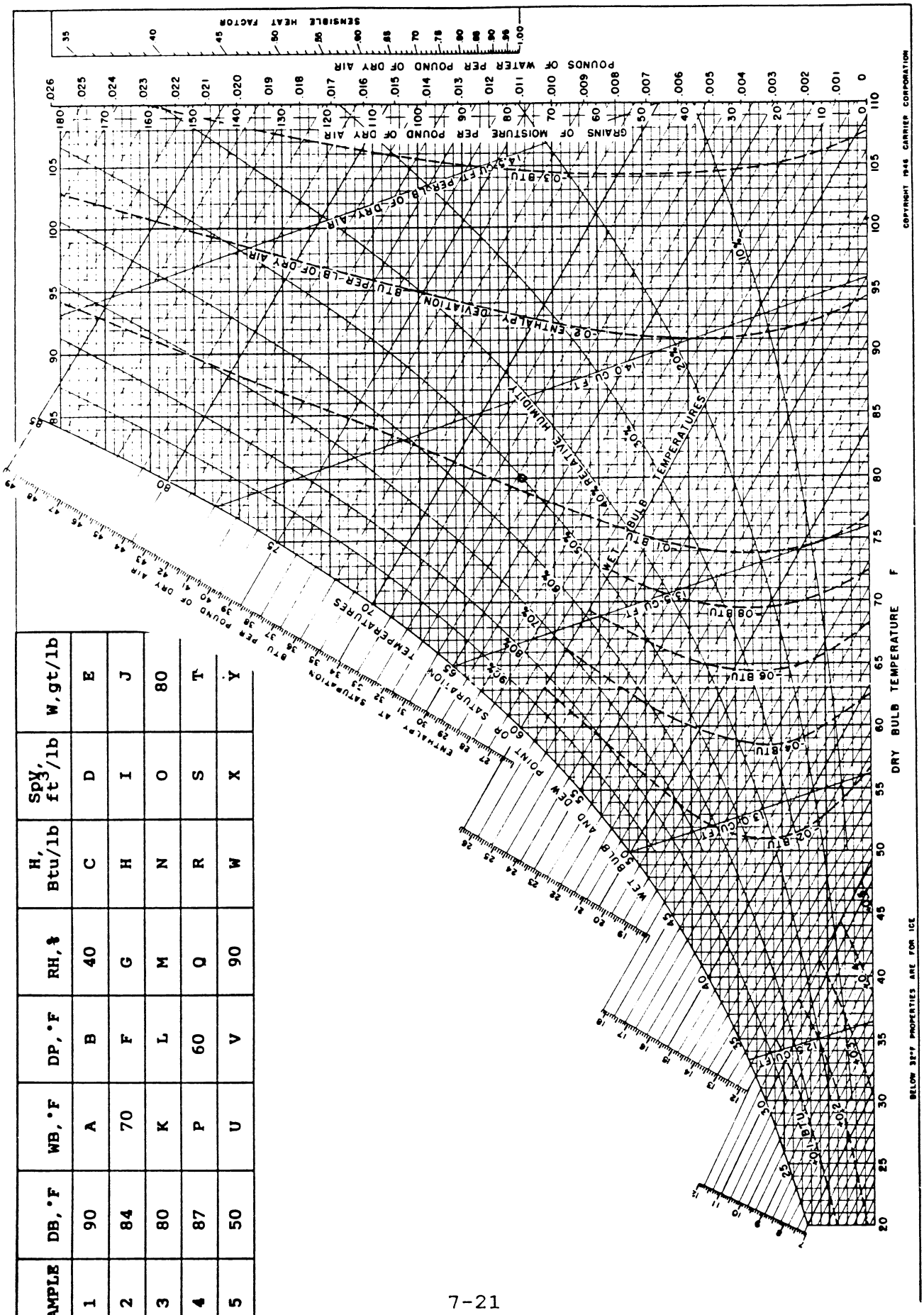

SAMPLE	DB, °F	WB, °F	DP, °F	RH, %	H, Btu/lb	Sp.V., ft³/lb	W, gt/lb
1	90	A	B	40	C	D	E
2	84	70	F	G	H	I	J
3	80	K	L	M	N	O	80
4	87	P	60	Q	R	S	T
5	50	U	V	90	W	X	Y

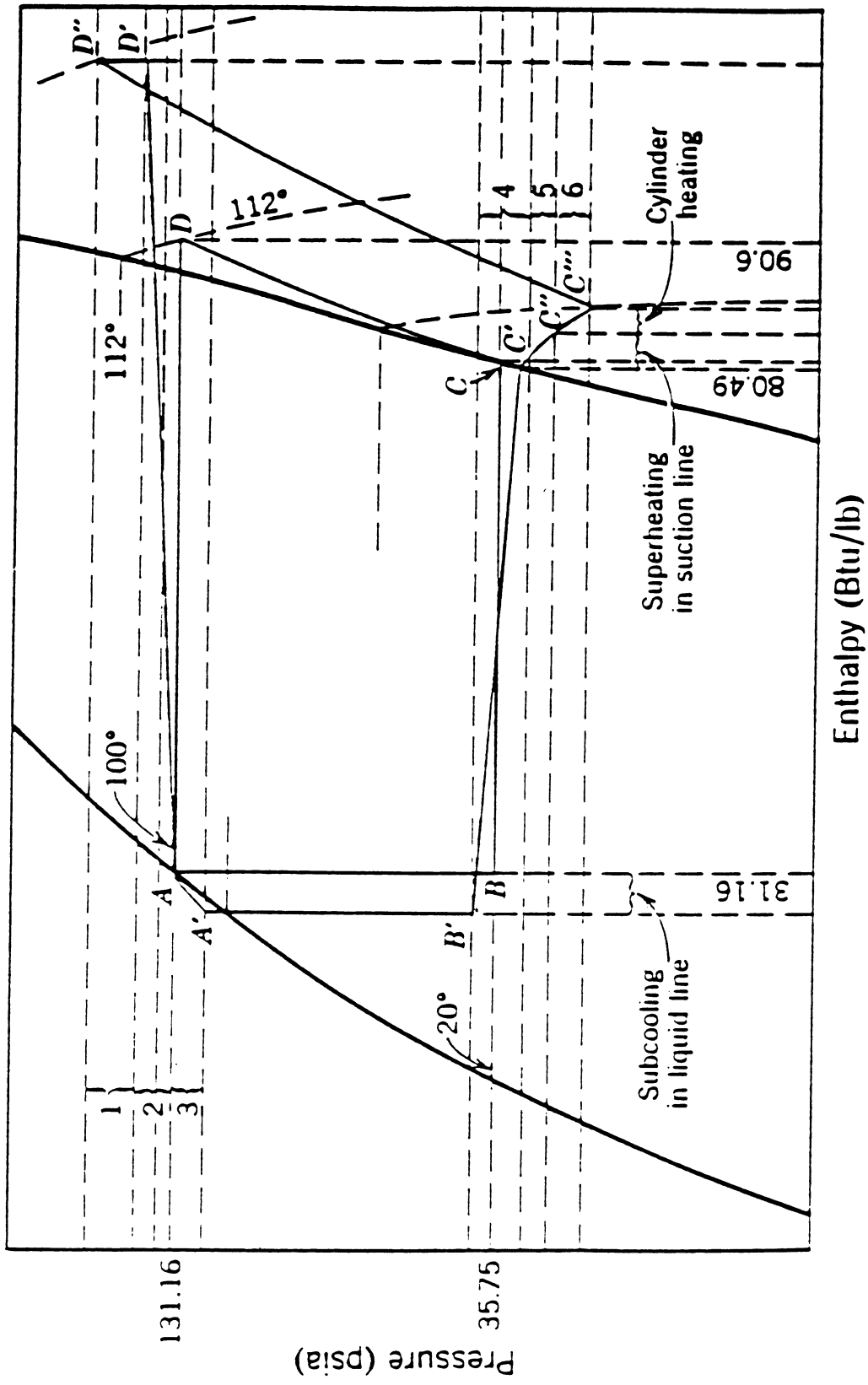
D''
D'
112°
D
112°
100°
A
A'
1
2
3
4
5
6
C
C'
C''
C'''
B
B'
20°
Cylinder heating
Superheating in suction line
Subcooling in liquid line
90.6
80.49
31.16
131.16
35.75
Pressure (psia)
Enthalpy (Btu/lb)

Temp.	Pressure		Volume		Density		Heat content from −40°			Entropy from −40°		Temp.
°F t	Abs. lb./in.² p	Gage lb./in.² p_d	Liquid ft.³/lb. v_f	Vapor ft.³/lb. v_g	Liquid lb./ft.³ $1/v_f$	Vapor lb./ft.³ $1/v_g$	Liquid Btu./lb. h_f	Latent Btu./lb. h	Vapor Btu./lb. h_g	Liquid Btu./lb.°F s_f	Vapor Btu./lb.°F s_g	°F t
0	23.87	9.17	0.0110	1.637	90.52	0.6109	8.25	69.96	78.21	0.01869	0.17091	0
2	24.89	10.19	.0110	1.574	90.31	.6352	8.67	69.77	78.44	.01961	.17075	2
4	25.96	11.26	.0111	1.514	90.11	.6606	9.10	69.57	78.67	.02052	.17060	4
5†	26.51	11.81	.0111	1.485	90.00	.6735	9.32	69.47	78.79	.02097	.17052	5†
6	27.05	12.35	.0111	1.457	89.88	.6864	9.53	69.37	78.90	.02143	.17045	6
8	28.18	13.48	.0111	1.403	89.68	.7129	9.96	69.17	79.13	.02235	.17030	8
10	29.35	14.65	0.0112	1.351	89.45	0.7402	10.39	68.97	79.36	0.02328	0.17015	10
12	30.56	15.86	.0112	1.301	89.24	.7687	10.82	68.77	79.59	.02419	.17001	12
14	31.80	17.10	.0112	1.253	89.03	.7981	11.26	68.56	79.82	.02510	.16987	14
16	33.08	18.38	.0112	1.207	88.81	.8288	11.70	68.35	80.05	.02601	.16974	16
18	34.40	19.70	.0113	1.163	88.58	.8598	12.12	68.15	80.27	.02692	.16961	18
20	35.75	21.05	0.0113	1.121	88.37	0.8921	12.55	67.94	80.49	0.02783	0.16949	20
22	37.15	22.45	.0113	1.081	88.13	.9251	13.00	67.72	80.72	.02873	.16938	22
24	38.58	23.88	.0113	1.043	87.91	.9588	13.44	67.51	80.95	.02963	.16926	24
26	40.07	25.37	.0114	1.007	87.68	.9930	13.88	67.29	81.17	.03053	.16913	26
28	41.59	26.89	.0114	0.973	87.47	1.028	14.32	67.07	81.39	.03143	.16900	28
30	43.16	28.46	0.0115	0.939	87.24	1.065	14.76	66.85	81.61	0.03233	0.16887	30
32	44.77	30.07	.0115	.908	87.02	1.102	15.21	66.62	81.83	.03323	.16876	32
34	46.42	31.72	.0115	.877	86.78	1.140	15.65	66.40	82.05	.03413	.16865	34
36	48.13	33.43	.0116	.848	86.55	1.180	16.10	66.17	82.27	.03502	.16854	36
38	49.88	35.18	.0116	.819	86.33	1.221	16.55	65.94	82.49	.03591	.16843	38
40	51.68	36.98	0.0116	0.792	86.10	1.263	17.00	65.71	82.71	0.03680	0.16833	40
42	53.51	38.81	.0116	.767	85.88	1.304	17.46	65.47	82.93	.03770	.16823	42
44	55.40	40.70	.0117	.742	85.66	1.349	17.91	65.24	83.15	.03859	.16813	44
46	57.35	42.65	.0117	.718	85.43	1.393	18.36	65.00	83.36	.03948	.16803	46
48	59.35	44.65	.0117	.695	85.19	1.438	18.82	64.74	83.57	.04037	.16794	48
50	61.39	46.69	0.0118	0.673	84.94	1.485	19.27	64.51	83.78	0.04126	0.16785	50
52	63.49	48.79	.0118	.652	84.71	1.534	19.72	64.27	83.99	.04215	.16776	52
54	65.63	50.93	.0118	.632	84.50	1.583	20.18	64.02	84.20	.04304	.16767	54
56	67.84	53.14	.0119	.612	84.28	1.633	20.64	63.77	84.41	.04392	.16758	56
58	70.10	55.40	.0119	.593	84.04	1.686	21.11	63.51	84.62	.04480	.16749	58
60	72.41	57.71	0.0119	0.575	83.78	1.740	21.57	63.25	84.82	0.04568	0.16741	60
62	74.77	60.07	.0120	.557	83.57	1.795	22.03	62.99	85.02	.04657	.16733	62
64	77.20	62.50	.0120	.540	83.34	1.851	22.49	62.73	85.22	.04745	.16725	64
66	79.67	64.97	.0120	.524	83.10	1.909	22.95	62.47	85.42	.04833	.16717	66
68	82.24	67.54	.0121	.508	82.86	1.968	23.42	62.20	85.62	.04921	.16709	68
70	84.82	70.12	0.0121	0.493	82.60	2.028	23.90	61.92	85.82	0.05009	0.16701	70
72	87.50	72.80	.0121	.479	82.37	2.090	24.37	61.65	86.02	.05097	.16693	72
74	90.20	75.50	.0122	.464	82.12	2.153	24.84	61.38	86.22	.05185	.16685	74
76	93.00	78.30	.0122	.451	81.87	2.218	25.32	61.10	86.42	.05272	.16677	76
78	95.85	81.15	.0123	.438	81.62	2.284	25.80	60.81	86.61	.05359	.16669	78
80	98.76	84.06	0.0123	0.425	81.39	2.353	26.28	60.52	86.80	0.05446	0.16662	80
82	101.7	87.00	.0123	.413	81.12	2.423	26.76	60.23	86.99	.05534	.16655	82
84	104.8	90.1	.0124	.401	80.87	2.495	27.24	59.94	87.18	.05621	.16648	84
86†	107.9	93.2	.0124	.389	80.63	2.569	27.72	59.65	87.37	.05708	.16640	86†
88	111.1	96.4	.0124	.378	80.37	2.645	28.21	59.35	87.56	.05795	.16632	88
90	114.3	99.6	0.0125	0.368	80.11	2.721	28.70	59.04	87.74	0.05882	0.16624	90
92	117.7	103.0	.0125	.357	79.86	2.799	29.19	58.73	87.92	.05969	.16616	92
94	121.0	106.3	.0126	.347	79.60	2.880	29.68	58.42	88.10	.06056	.16608	94
96	124.5	109.8	.0126	.338	79.32	2.963	30.18	58.10	88.28	.06143	.16600	96
98	128.0	113.3	.0126	.328	79.06	3.048	30.67	57.78	88.45	.06230	.16592	98
100	131.6	116.9	0.0127	0.319	78.80	3.135	31.16	57.46	88.62	0.06316	0.16584	100
102	135.3	120.6	.0127	.310	78.54	3.224	31.65	57.14	88.79	.06403	.16576	102
104	139.0	124.3	.0128	.302	78.27	3.316	32.15	56.80	88.95	.06490	.16568	104
106	142.8	128.1	.0128	.293	78.00	3.411	32.65	56.46	89.11	.06577	.16560	106
108	146.8	132.1	.0129	.285	77.73	3.509	33.15	56.12	89.27	.06663	.16551	108
110	150.7	136.0	0.0129	0.277	77.46	3.610	33.65	55.78	89.43	0.06749	0.16542	110
112	154.8	140.1	.0130	.269	77.18	3.714	34.15	55.43	89.58	.06836	.16533	112
114	158.9	144.2	.0130	.262	76.89	3.823	34.65	55.08	89.73	.06922	.16524	114
116	163.1	148.4	.0131	.254	76.60	3.934	35.15	54.72	89.87	.07008	.16515	116
118	167.4	152.7	.0131	.247	76.32	4.049	35.65	54.36	90.01	.07094	.16505	118
120	171.8	157.1	0.0132	0.240	76.02	4.167	36.16	53.99	90.15	0.07180	0.16495	120
122	176.2	161.5	.0132	.233	75.72	4.288	36.66	53.62	90.28	.07266	.16484	122
124	180.8	166.1	.0133	.277	75.40	4.413	37.16	53.24	90.40	.07352	.16473	124
126	185.4	170.7	.0133	.220	75.10	4.541	37.67	52.85	90.52	.07437	.16462	126
128	190.1	175.4	.0134	.214	74.78	4.673	38.18	52.46	90.64	.07522	.16450	128
130	194.9	180.2	0.0134	0.208	74.46	4.808	38.69	52.07	90.76	0.07607	0.16438	130
132	199.8	185.1	.0135	.202	74.13	4.948	39.19	51.67	90.86	.07691	.16425	132
134	204.8	190.1	.0135	.196	73.81	5.094	39.70	51.26	90.96	.07775	.16411	134
136	209.9	195.2	.0136	.191	73.46	5.247	40.21	50.85	91.06	.07858	.16396	136
138	215.0	200.3	.0137	.185	73.10	5.405	40.72	50.43	91.15	.07941	.16380	138
140	220.2	205.5	0.0138	0.180	72.73	5.571	41.24	50.00	91.24	0.08024	0.16363	140