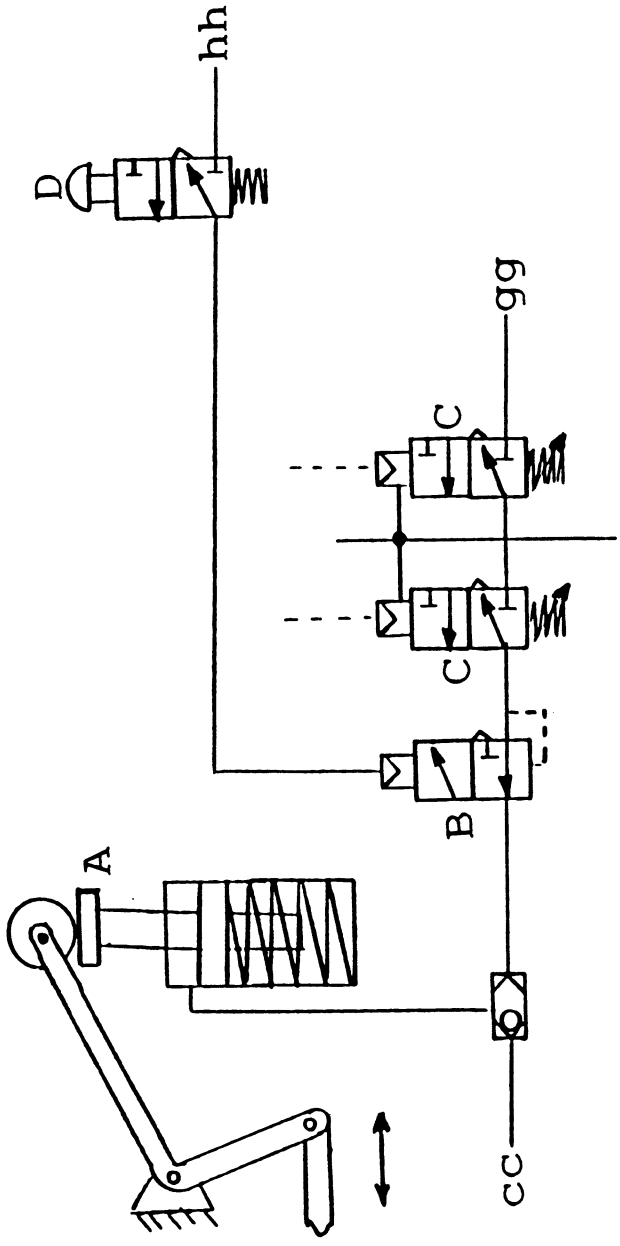

(COURTESY OF NEW SULZER DIESEL)

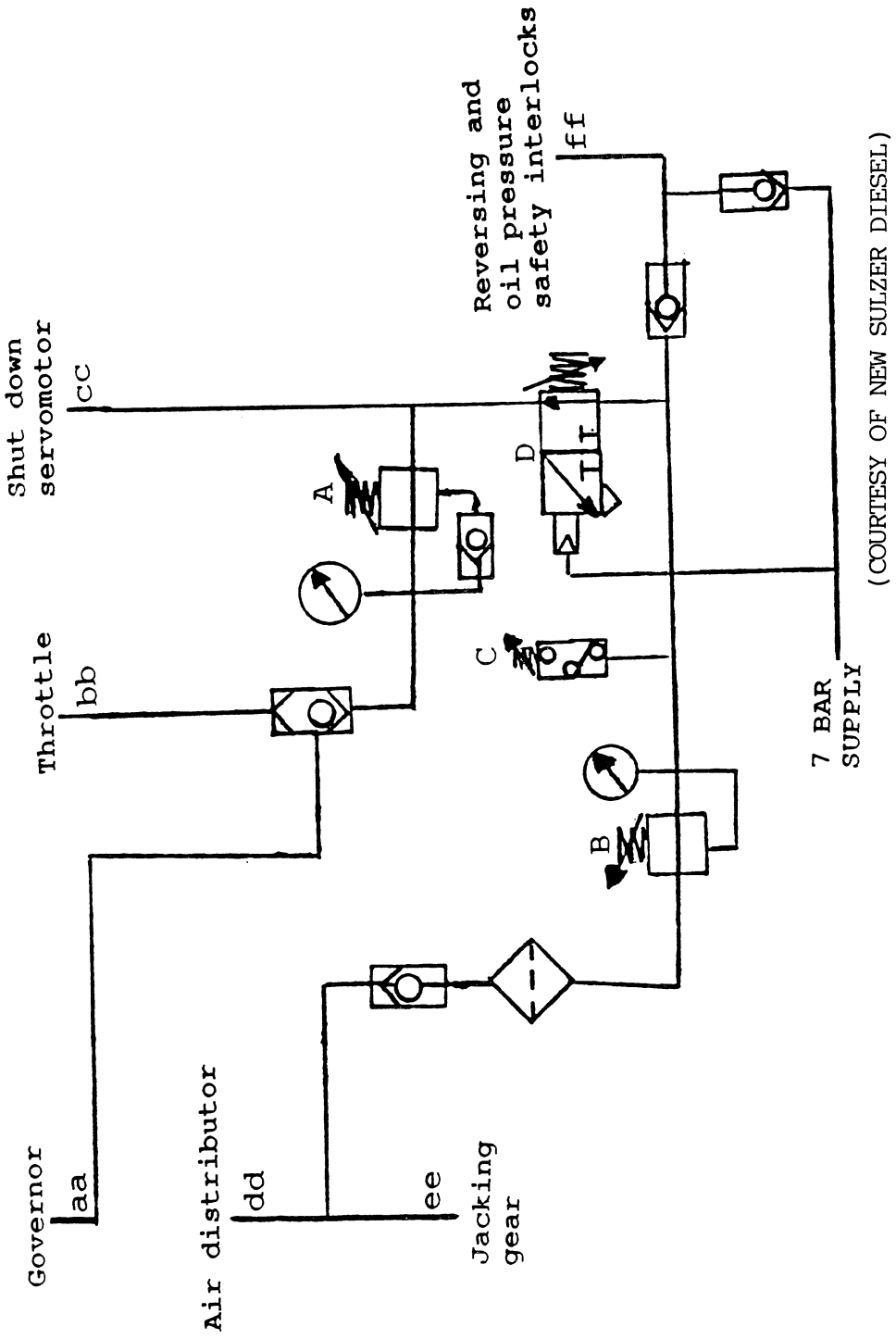

(COURTESY OF NEW SULZER DIESEL)

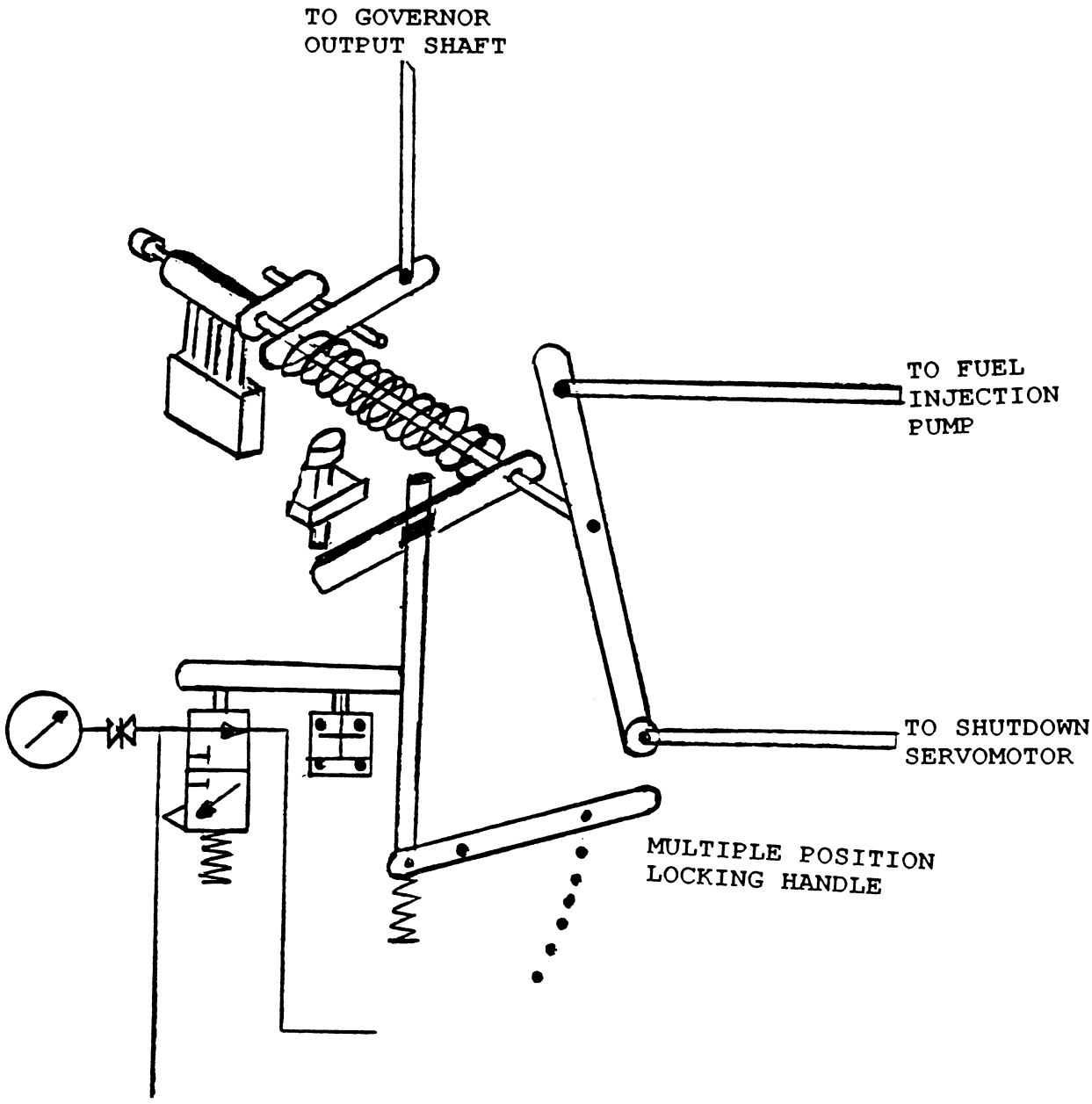

(COURTESY OF NEW SULZER DIESEL)

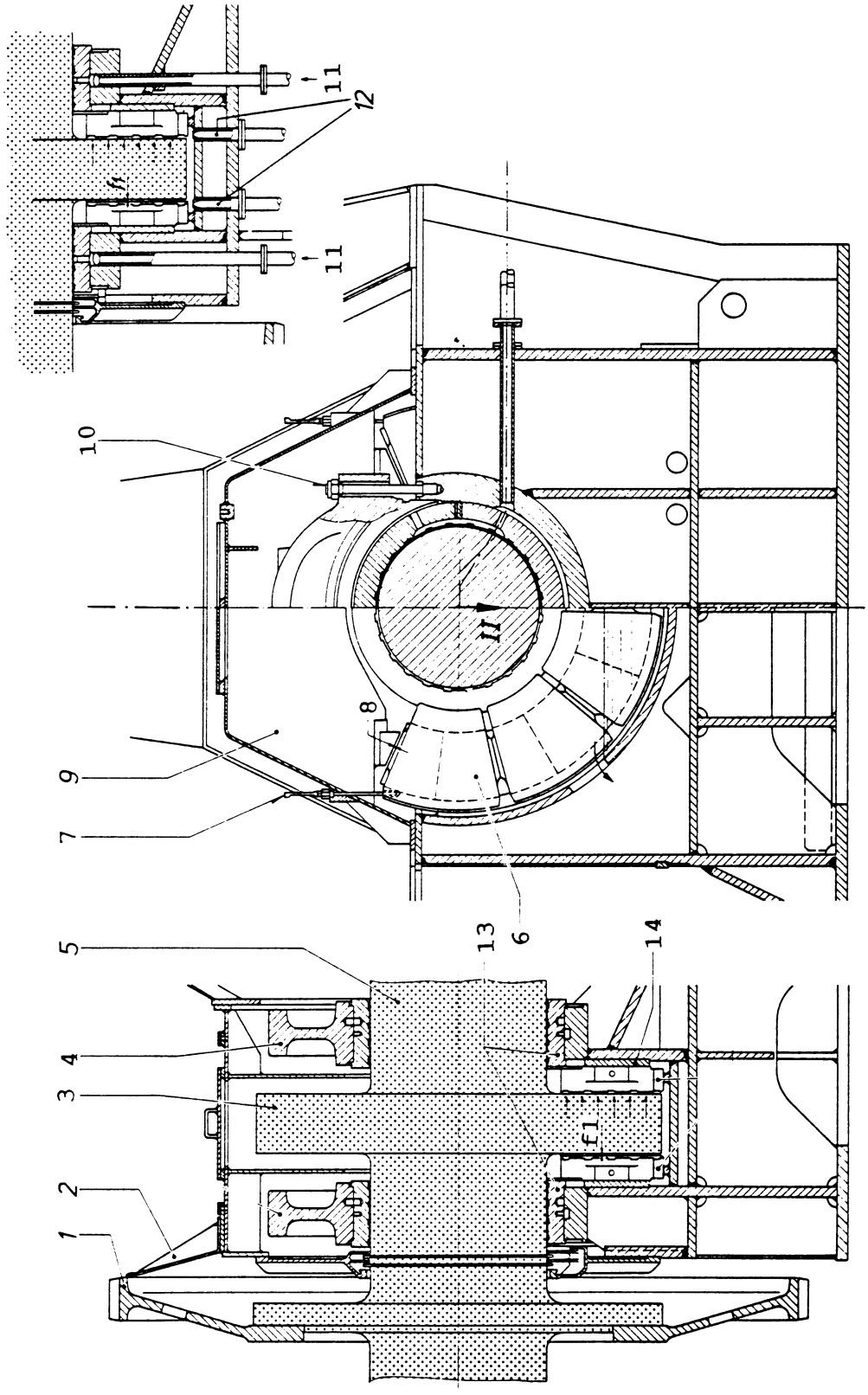

(COURTESY OF NEW SULZER DIESEL)

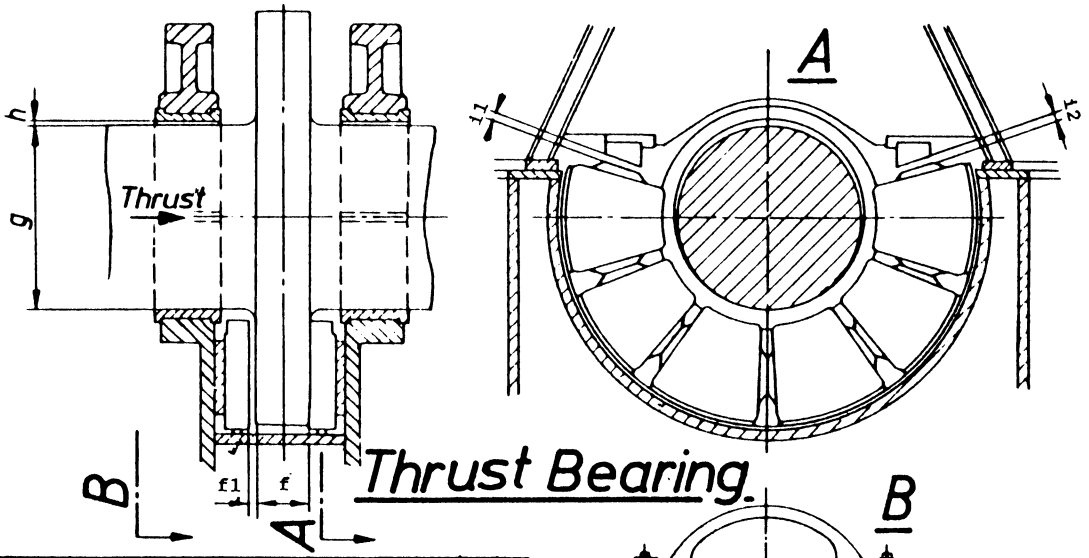

Thrust Bearing

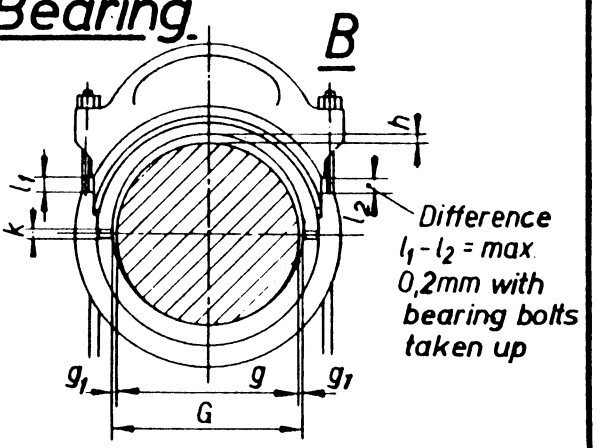

Nominal dimension	Normal play	Max. play (worn)
f=200	f1=1.0	2,0
g=540 $^{+0}_{-0,08}$	g_1 = min. 0,10	
G=540 $^{+0,38}_{+0,30}$	h= $^{0,46}_{0,30}$	0,8
	i1+i2=5	
k=20		

RND 68	Principal Clearances Crankshaft and Thrust Bearing — All dimensions in mm	7 354 366-E

(COURTESY OF NEW SULZER DIESEL)

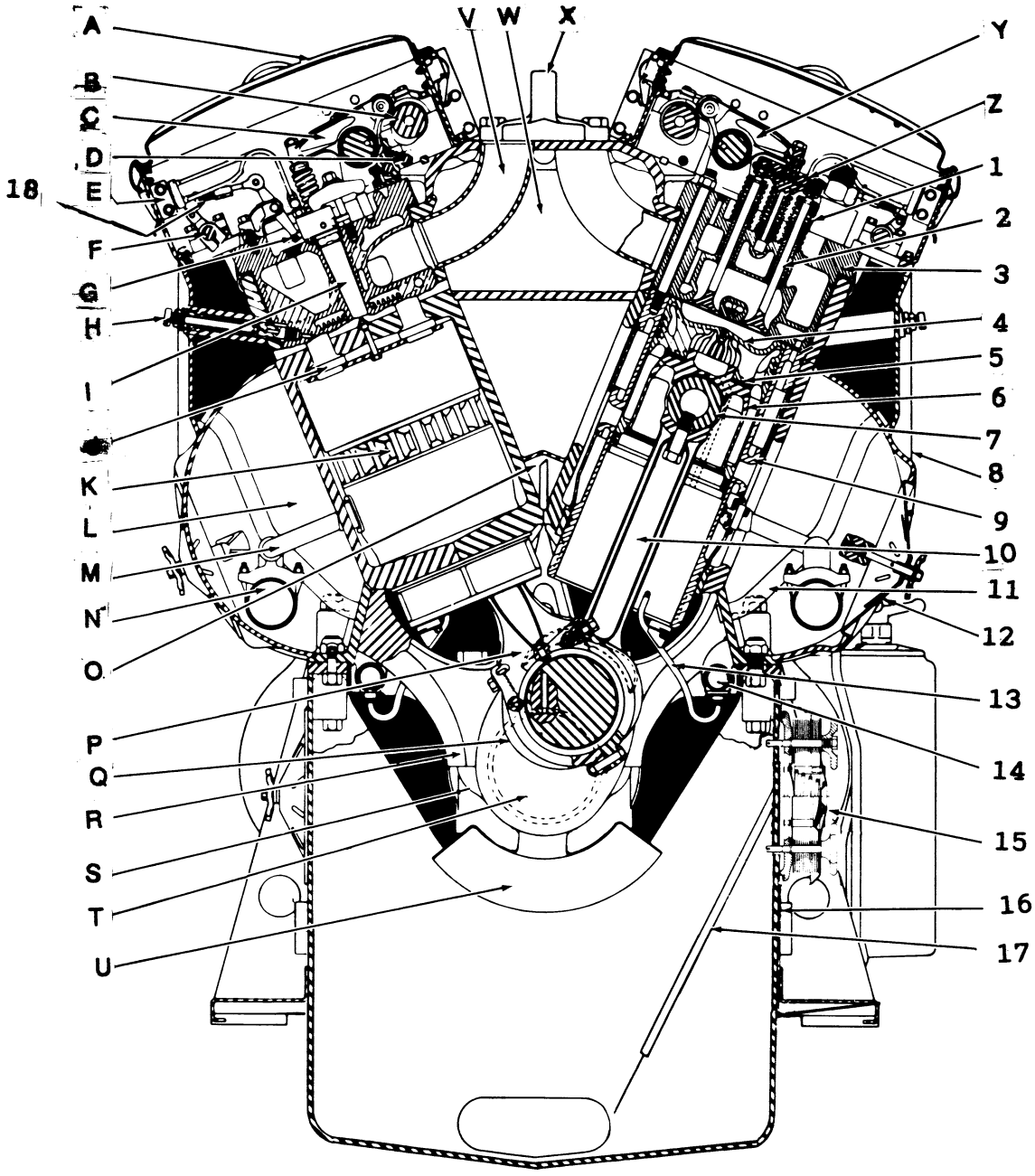

(DRAWING FURNISHED AND COPYRIGHT © RESERVED BY ELECTRO-MOTIVE DIVISION-GENERAL MOTOR CORPORATION)

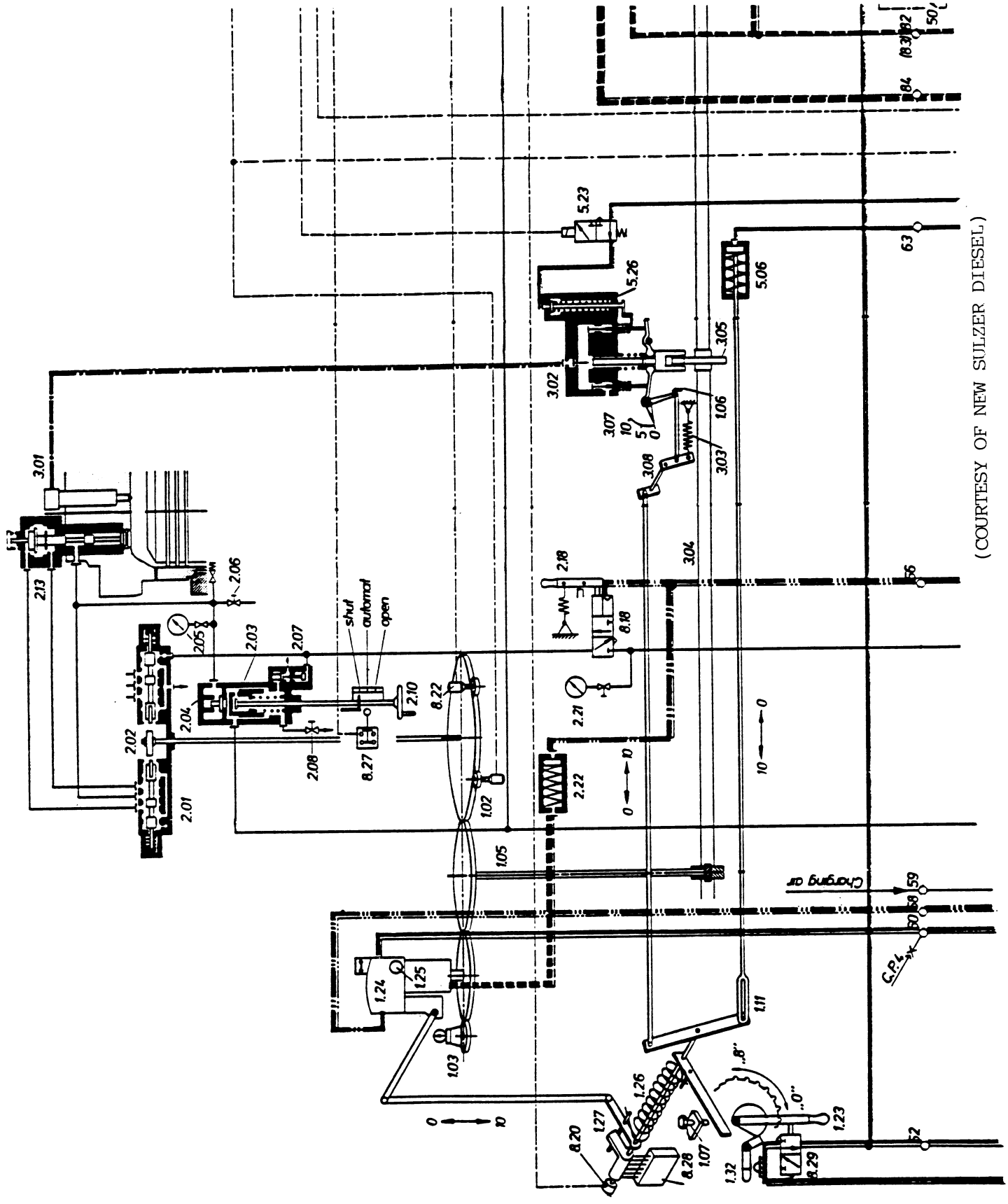

(COURTESY OF NEW SULZER DIESEL)

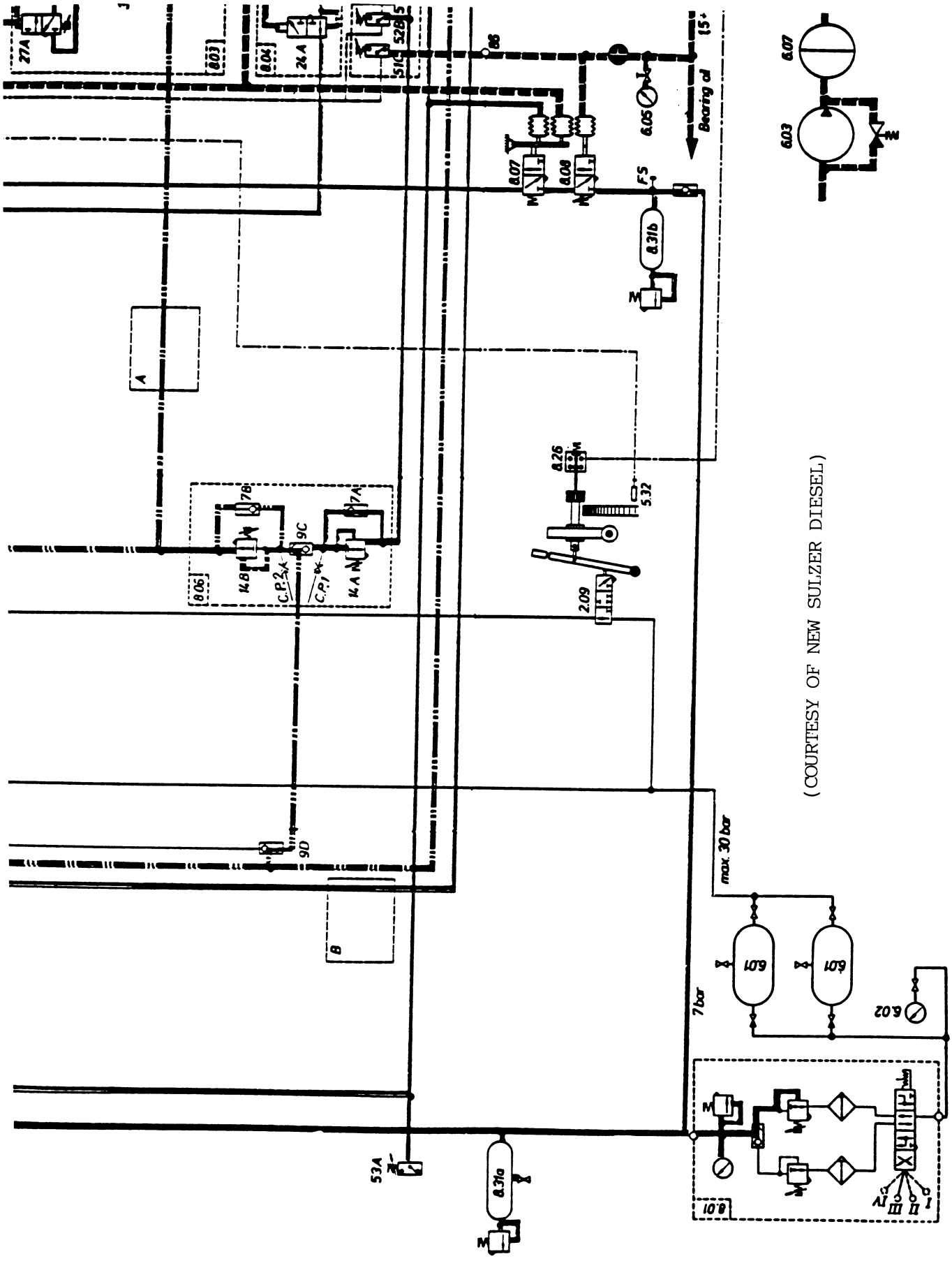

(COURTESY OF NEW SULZER DIESEL)

(COURTESY OF
NEW SULZER DIESEL)

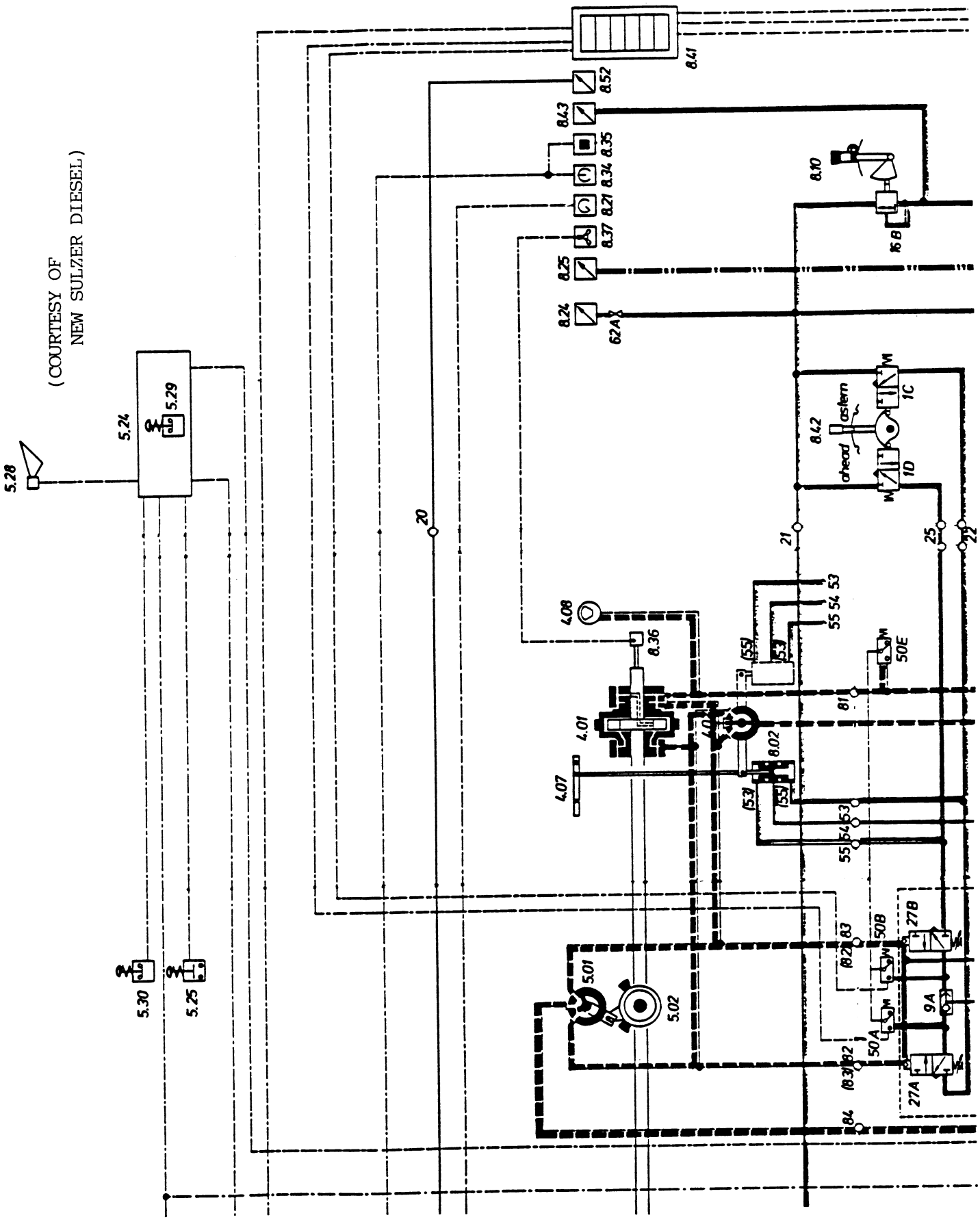

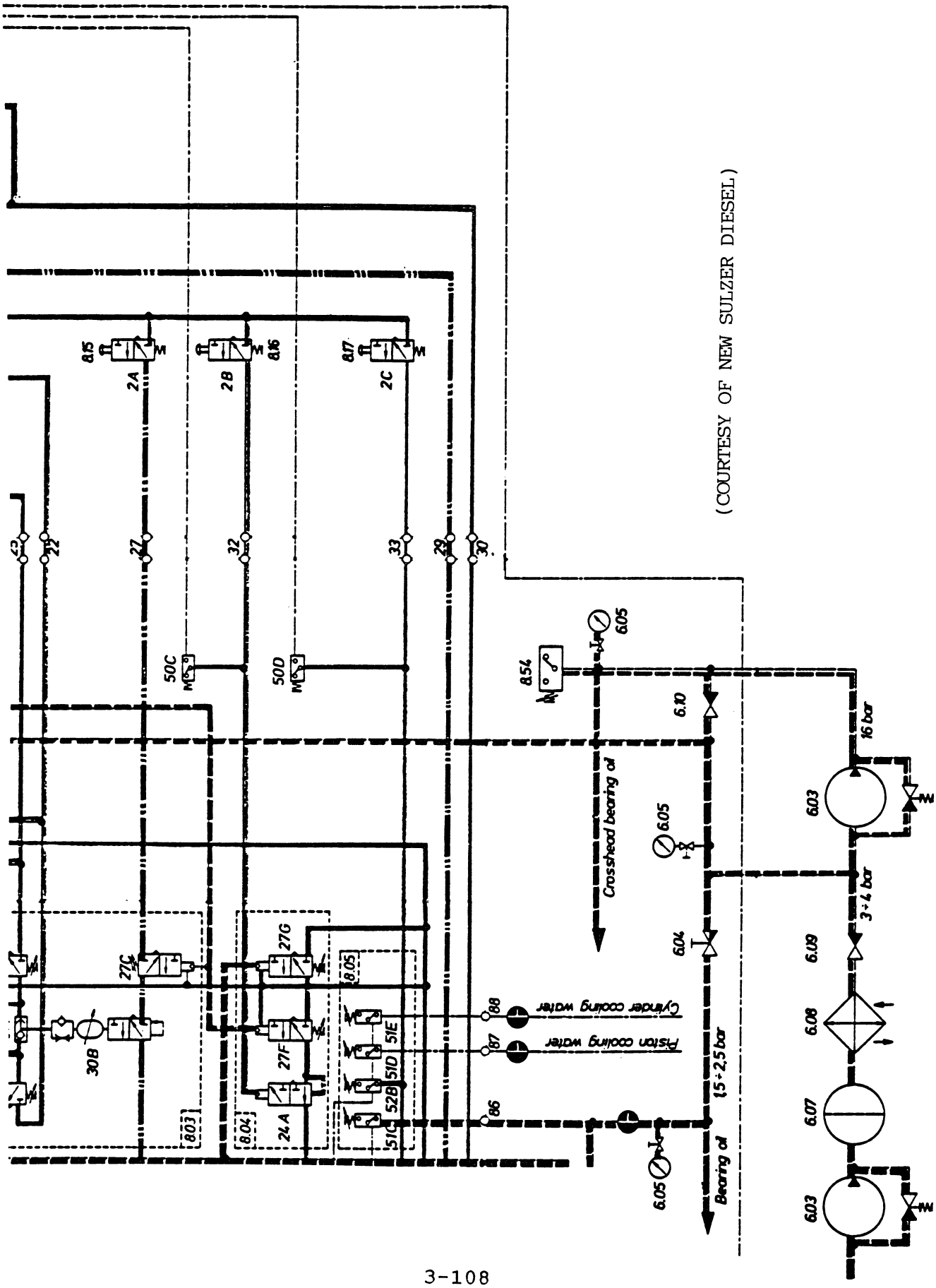

(COURTESY OF NEW SULZER DIESEL)

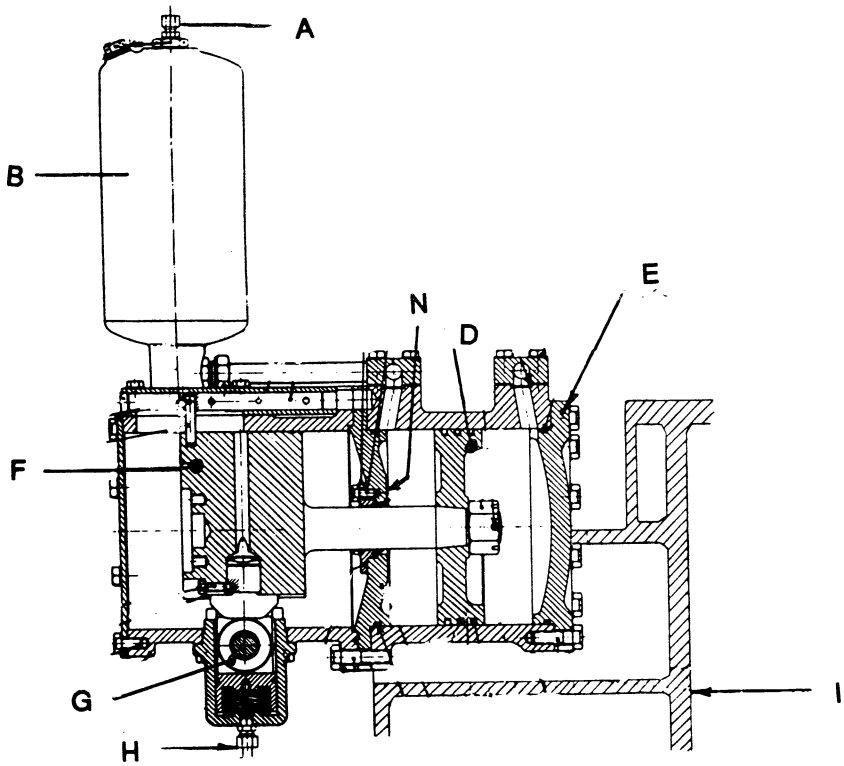

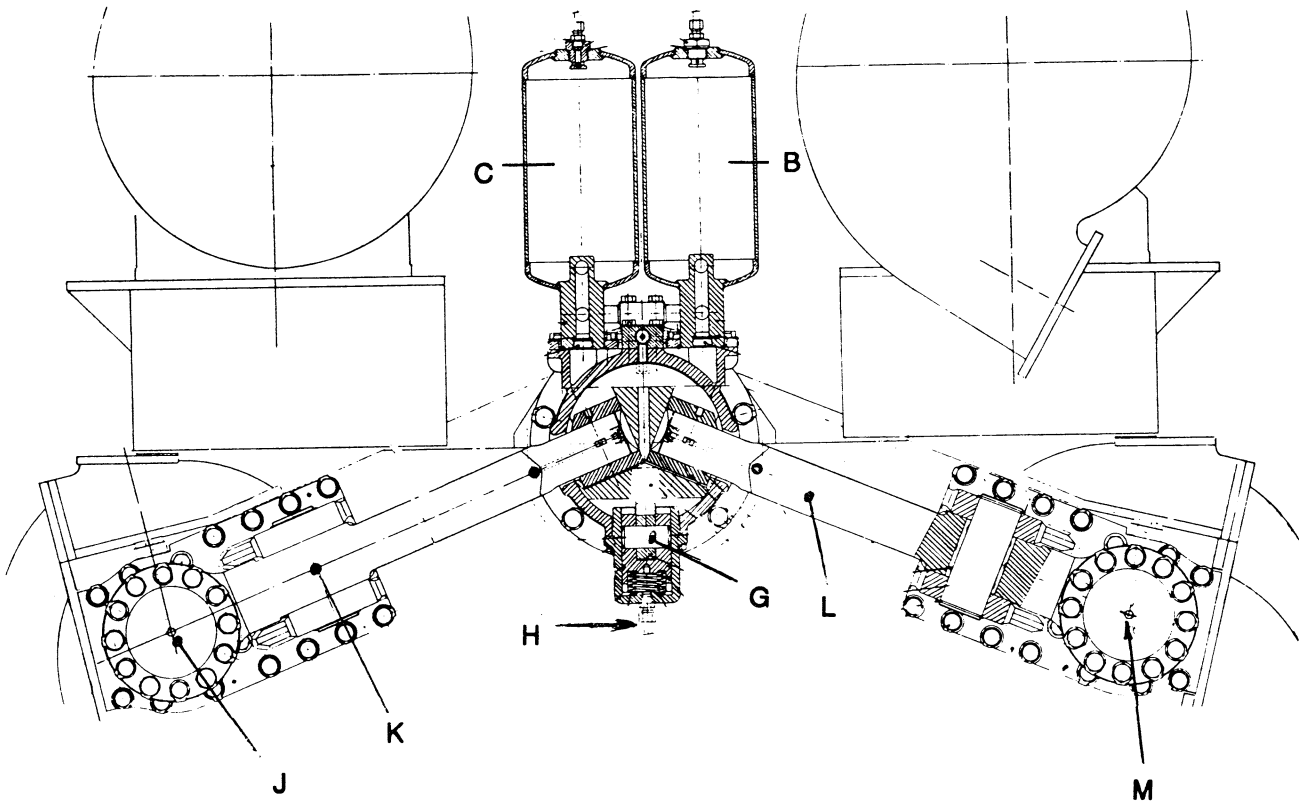

3-109 (COURTESY OF COLTEC INDUSTRIES INC.)

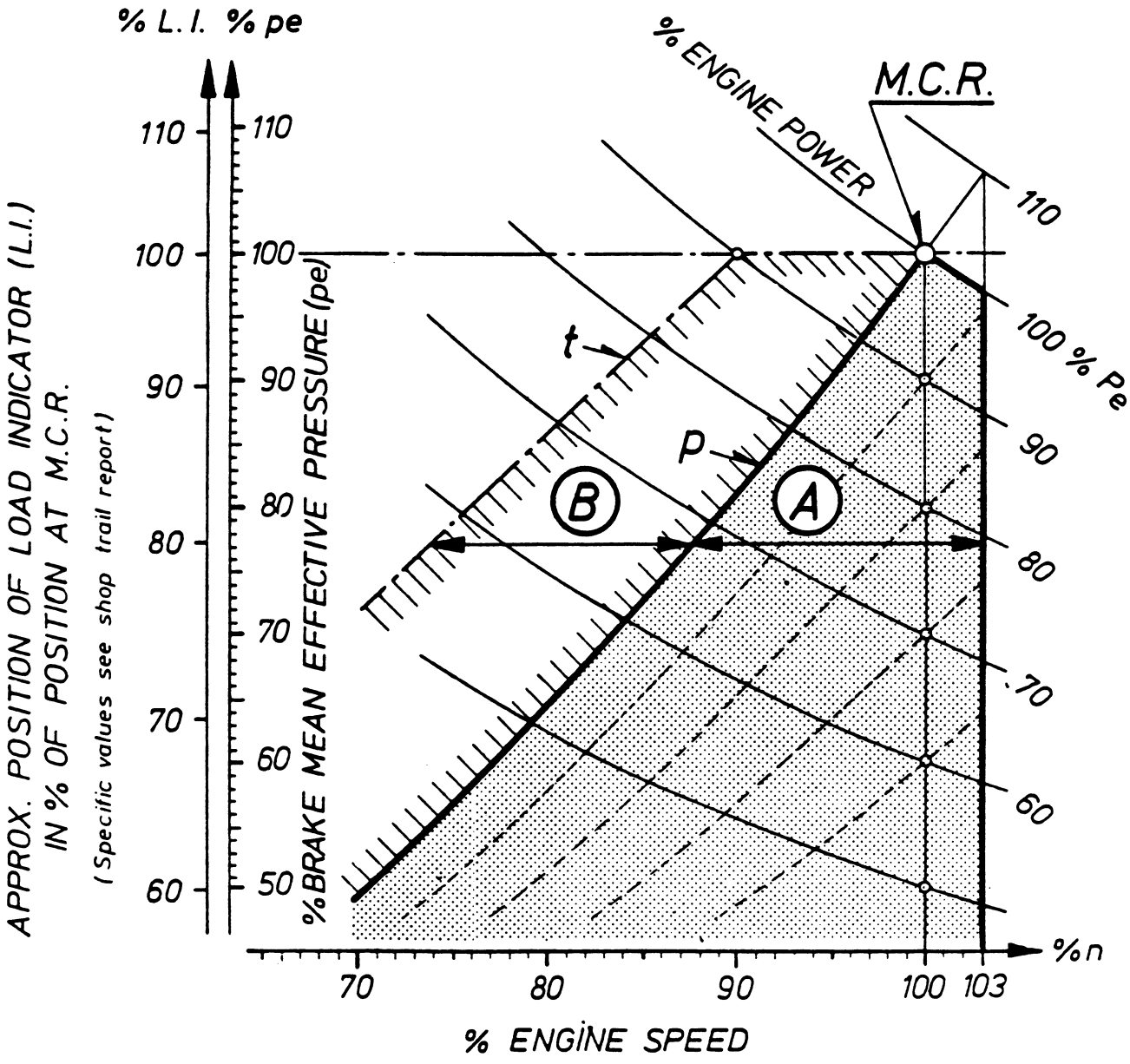

(COURTESY OF NEW SULZER DIESEL)

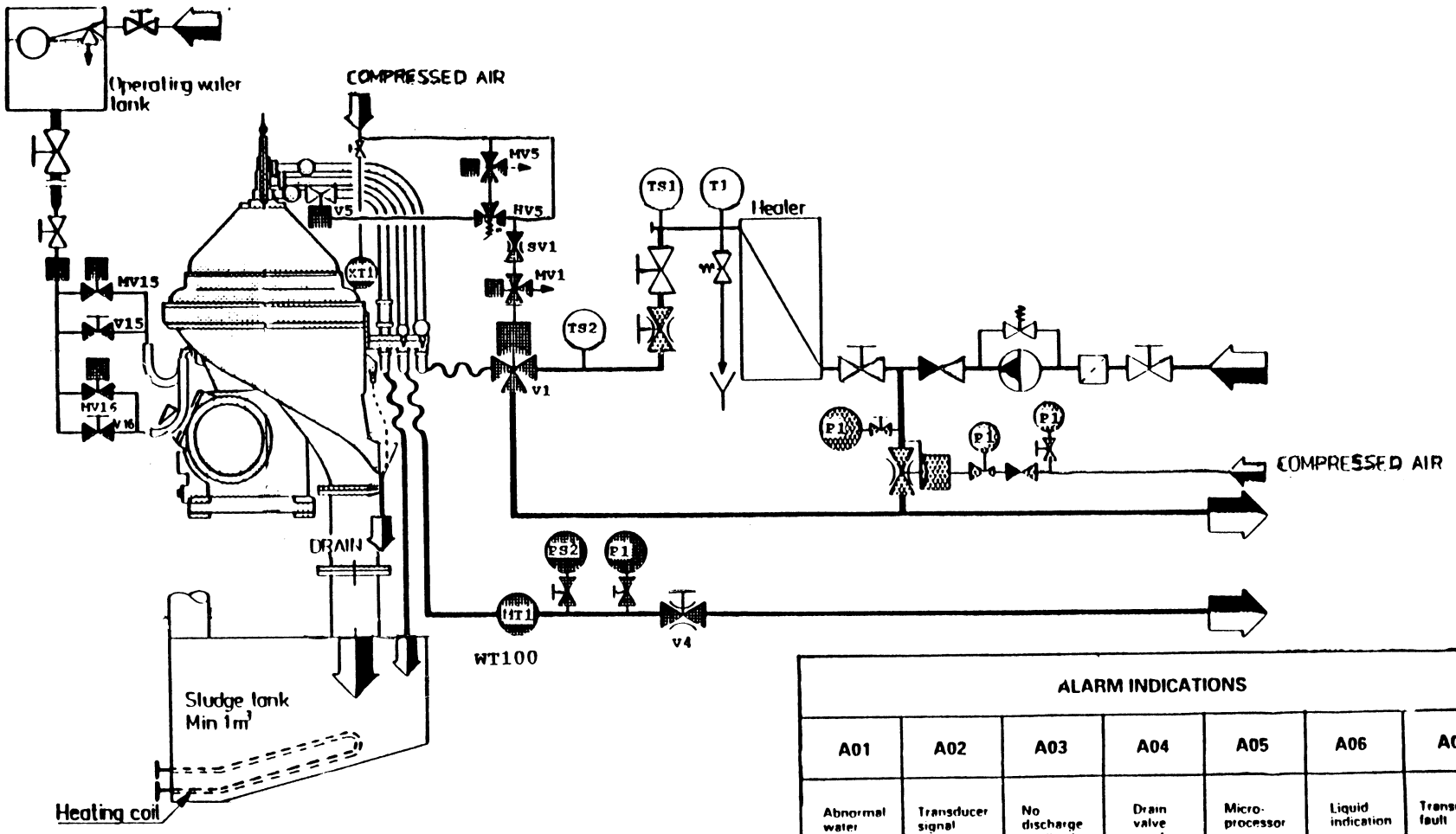

(COURTESY OF ALFA-LAVAL [MARINE AND POWER DIVISION])

ALARM INDICATIONS						
A01	A02	A03	A04	A05	A06	A07
Abnormal water content	Transducer signal minimum value	No discharge feedback signal	Drain valve insuf-ficient	Micro-processor error	Liquid indication	Transducer fault

(EPC 30) ALARM INDICATIONS PROGRAM UNIT							
Alarm from MARST I	Low pressure in oil outlet	High oil temp after preheater	Low oil temperature after preheater	Emergency stopping or vibra-tions	No discharge	Logically wrong signal from 1:st separator	Remote alarm signal only