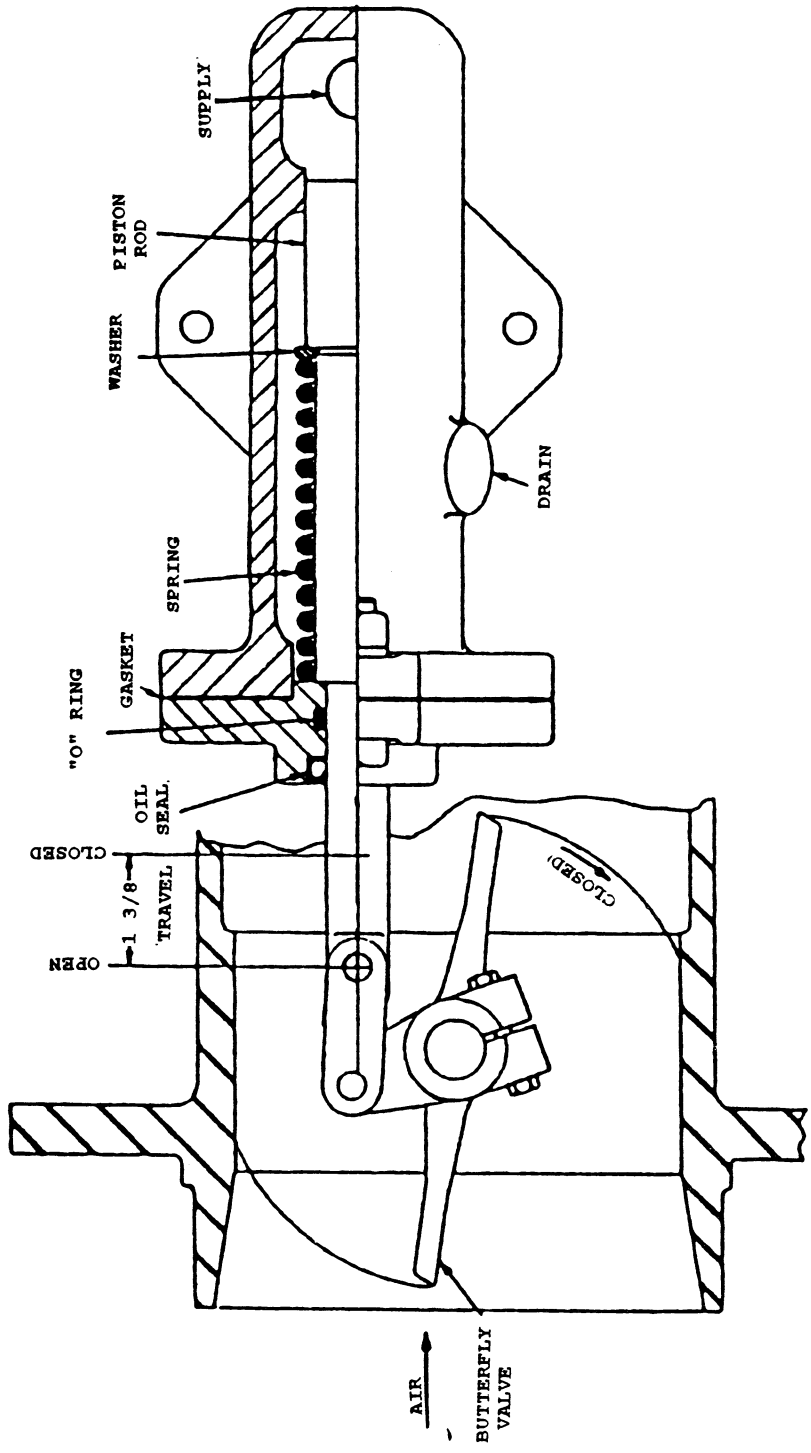
SUPPLY
PISTON ROD
WASHER
SPRING
GASKET
"O" RING
OIL SEAL
CLOSED
1 3/8
TRAVEL
OPEN
DRAIN
CLOSED
AIR
BUTTERFLY VALVE

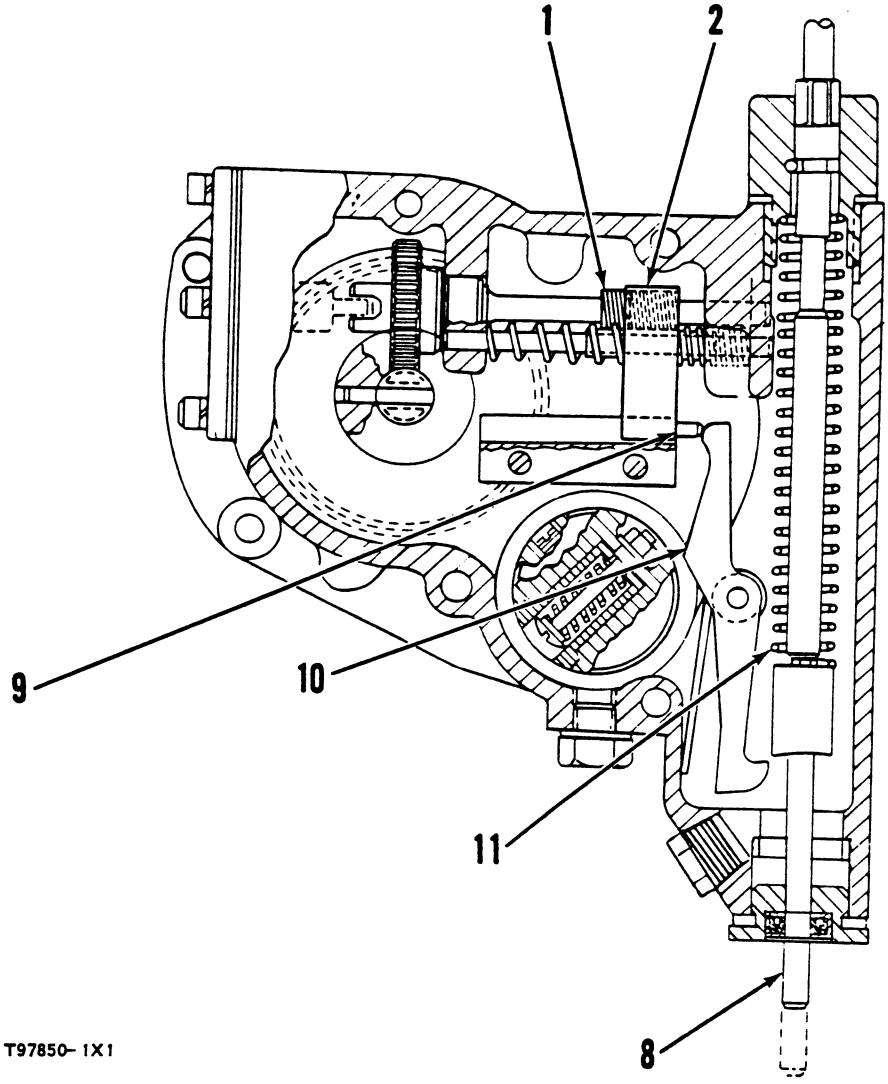
1
2
9
10
11
8
T97850-1X1

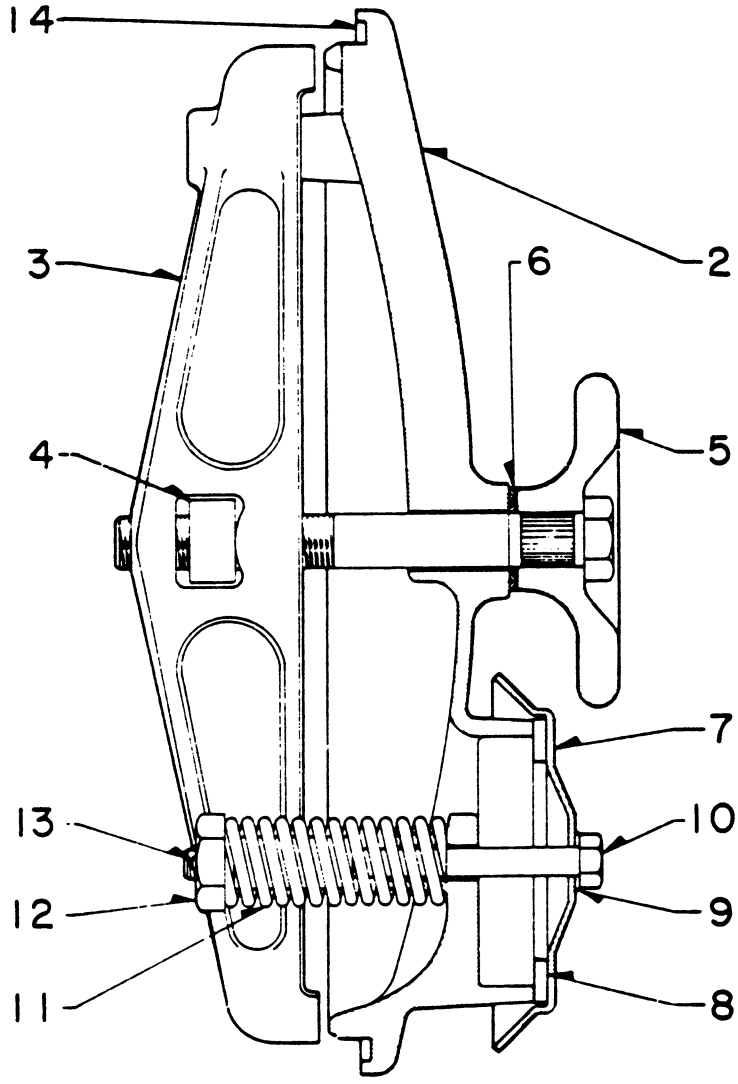
14
3
6
2
4
5
7
13
10
12
9
11
8

MO-0106

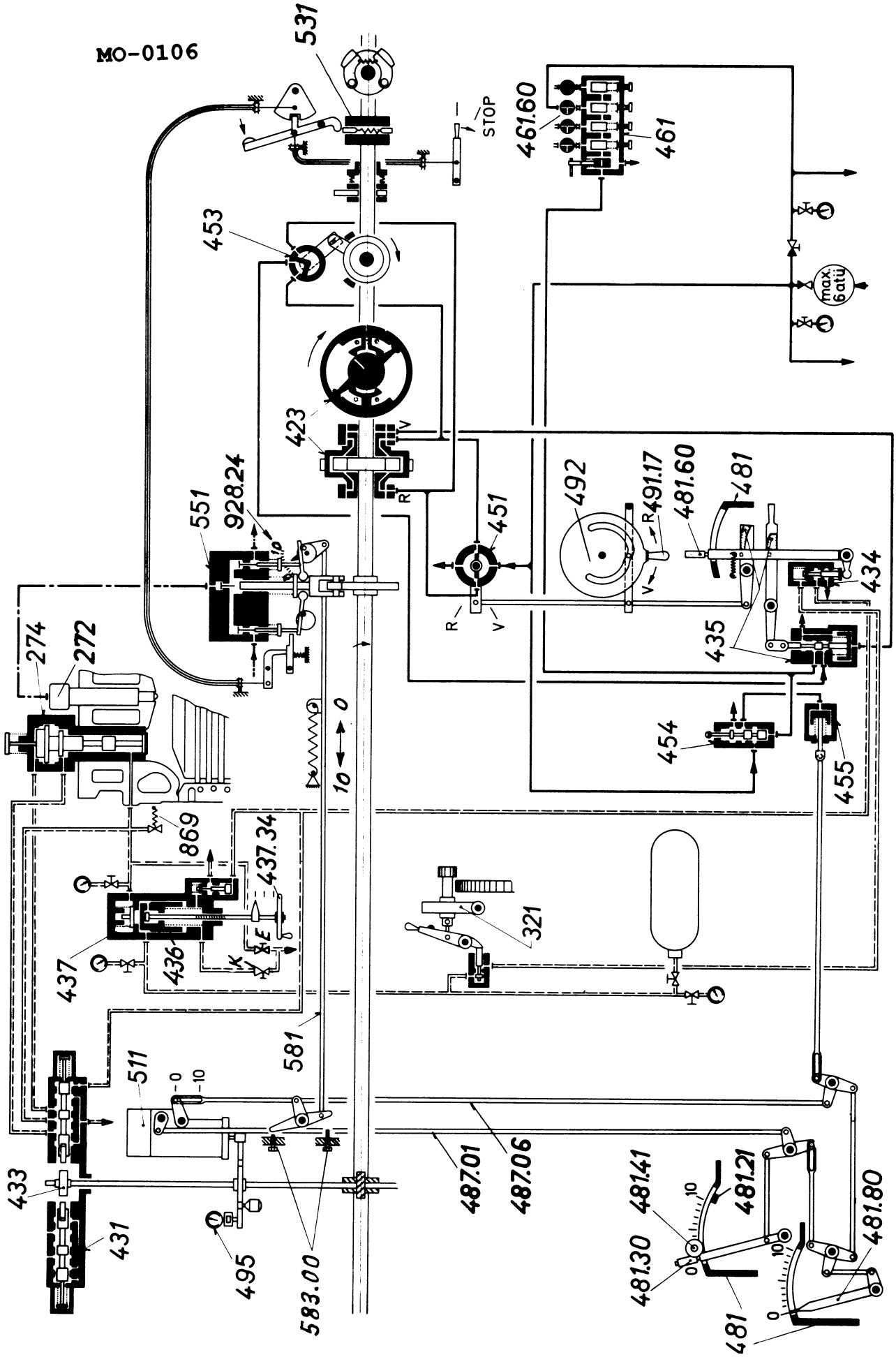

531
STOP
461.60
461
453
max. 6atü
423
V
R
928.24
551
451
492
R
491.17
481.60
481
434
435
274
272
454
455
869
437.34
437
436
321
581
511
0
-10
433
431
495
583.00
487.01
487.06
481.41
481.21
481.30
481.80
481

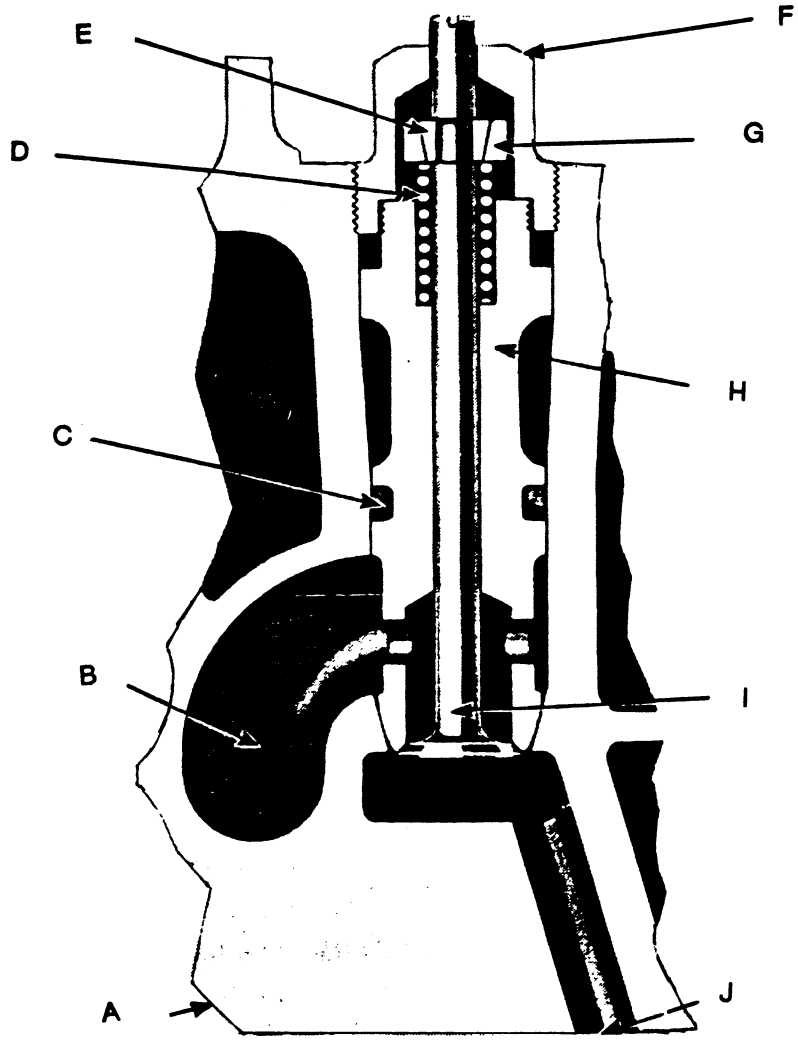
E
F
D
G
H
C
B
I
A
J

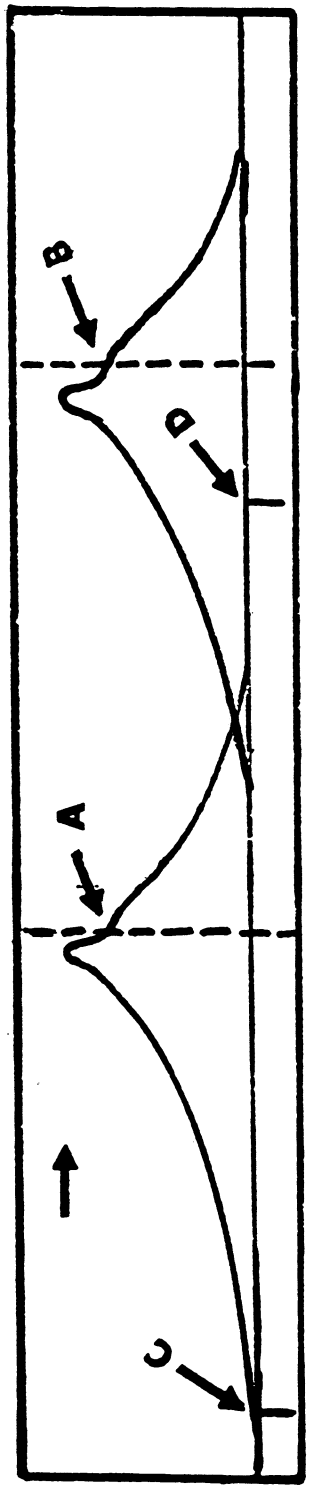
B
D
A
C

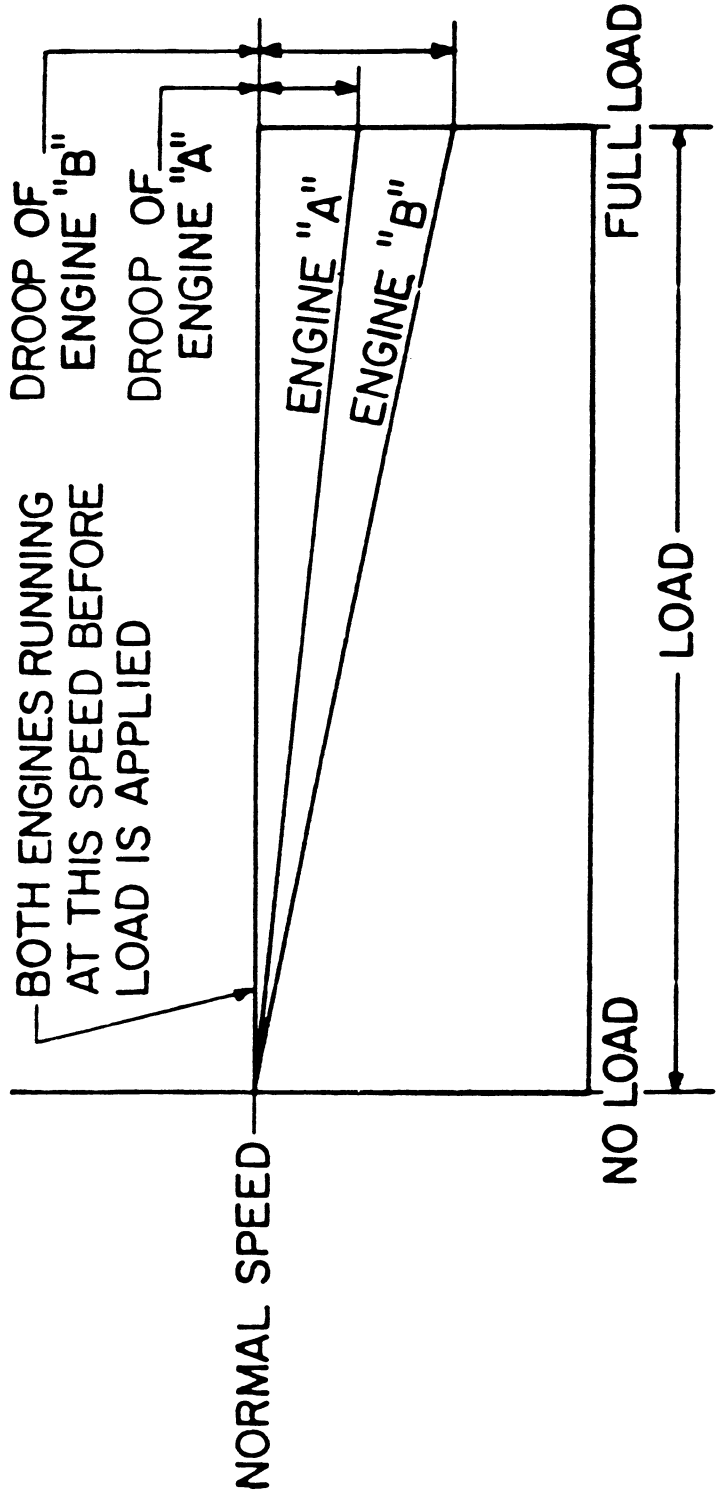
DROOP OF ENGINE "B"
DROOP OF ENGINE "A"
BOTH ENGINES RUNNING AT THIS SPEED BEFORE LOAD IS APPLIED
ENGINE "A"
ENGINE "B"
NORMAL SPEED
NO LOAD
FULL LOAD
LOAD

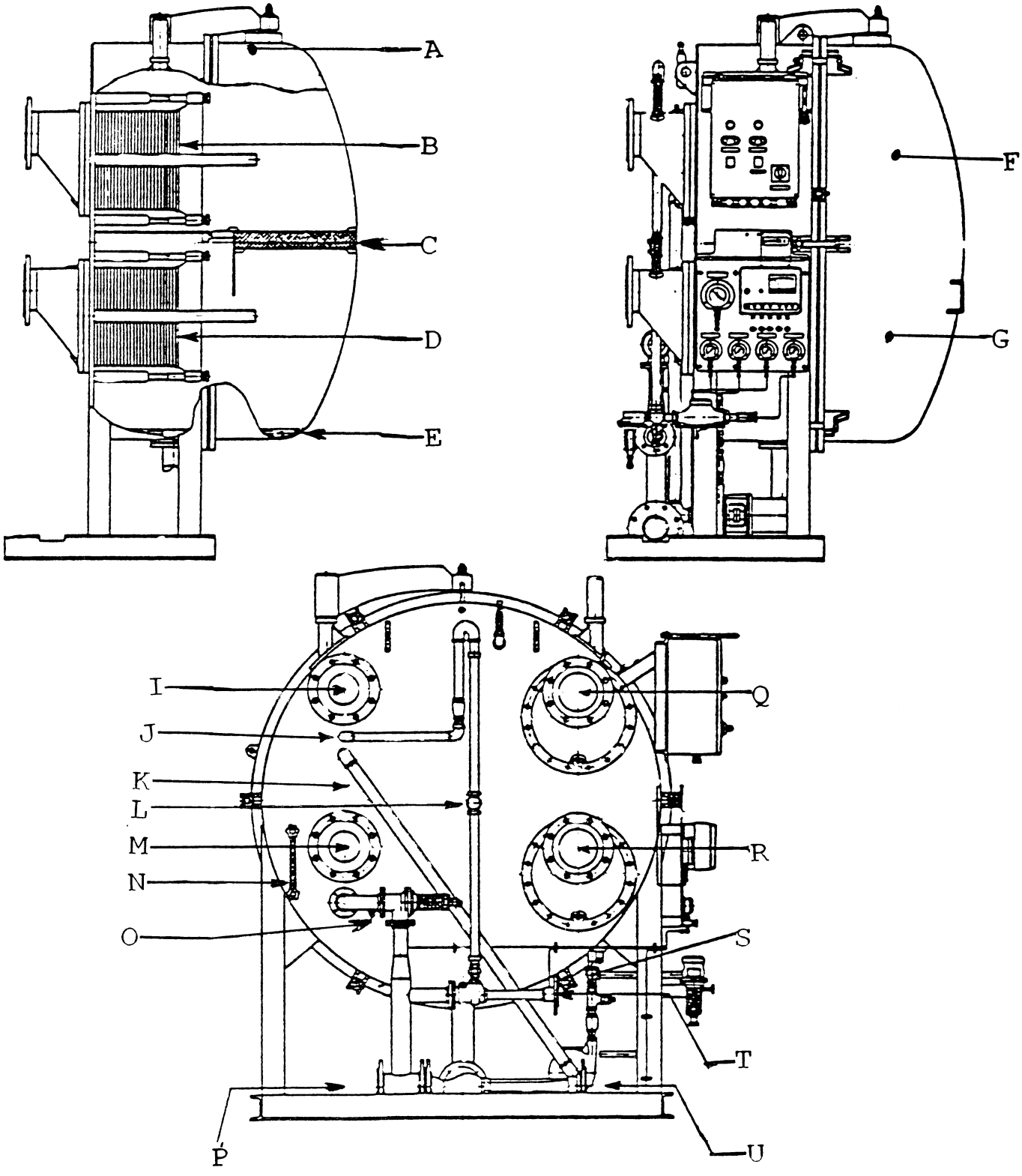

(COURTESY OF ALFA-LAVAL [MARINE AND POWER DIVISION])

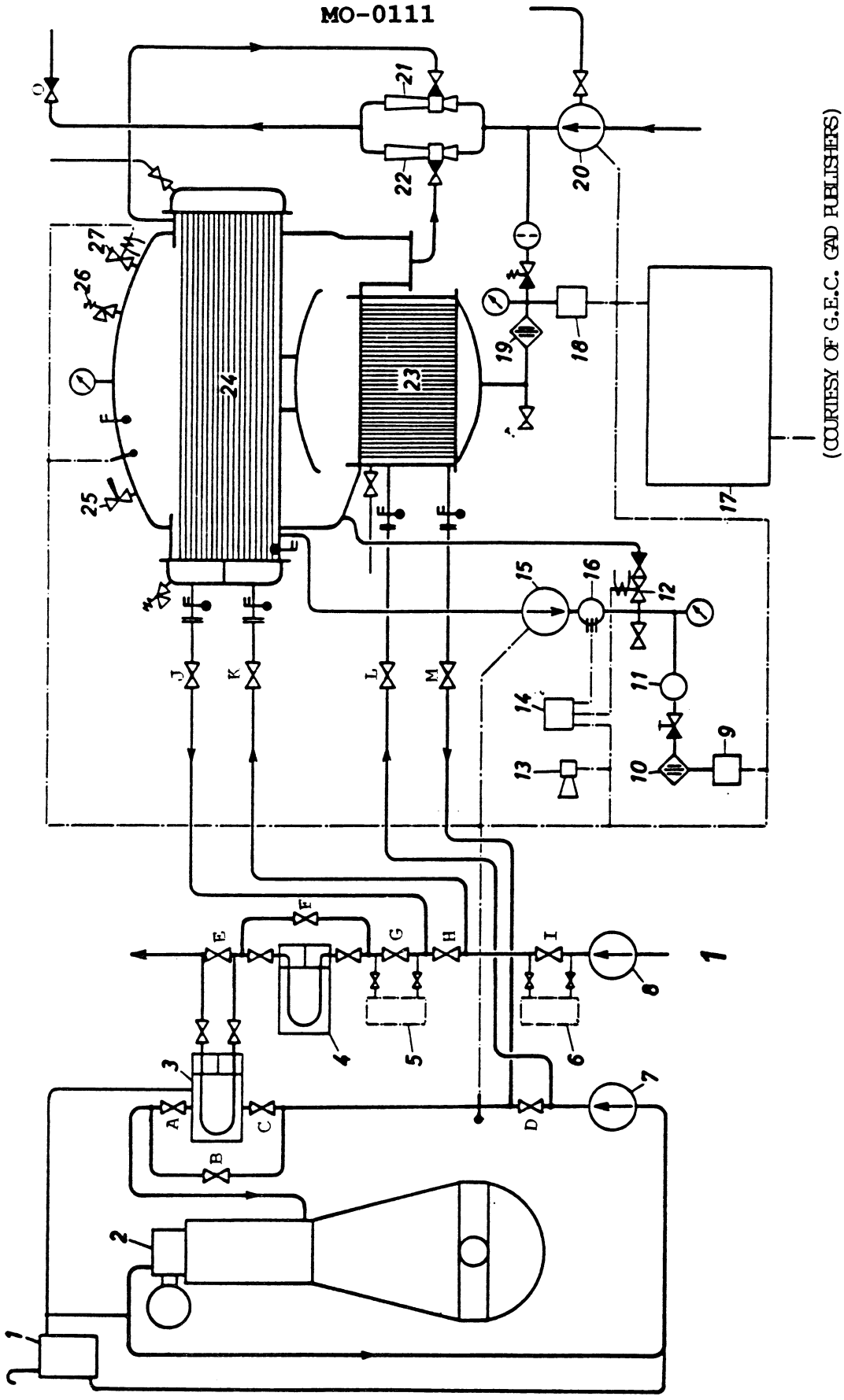

(COURTESY OF G.E.C. GAD PUBLISHERS)

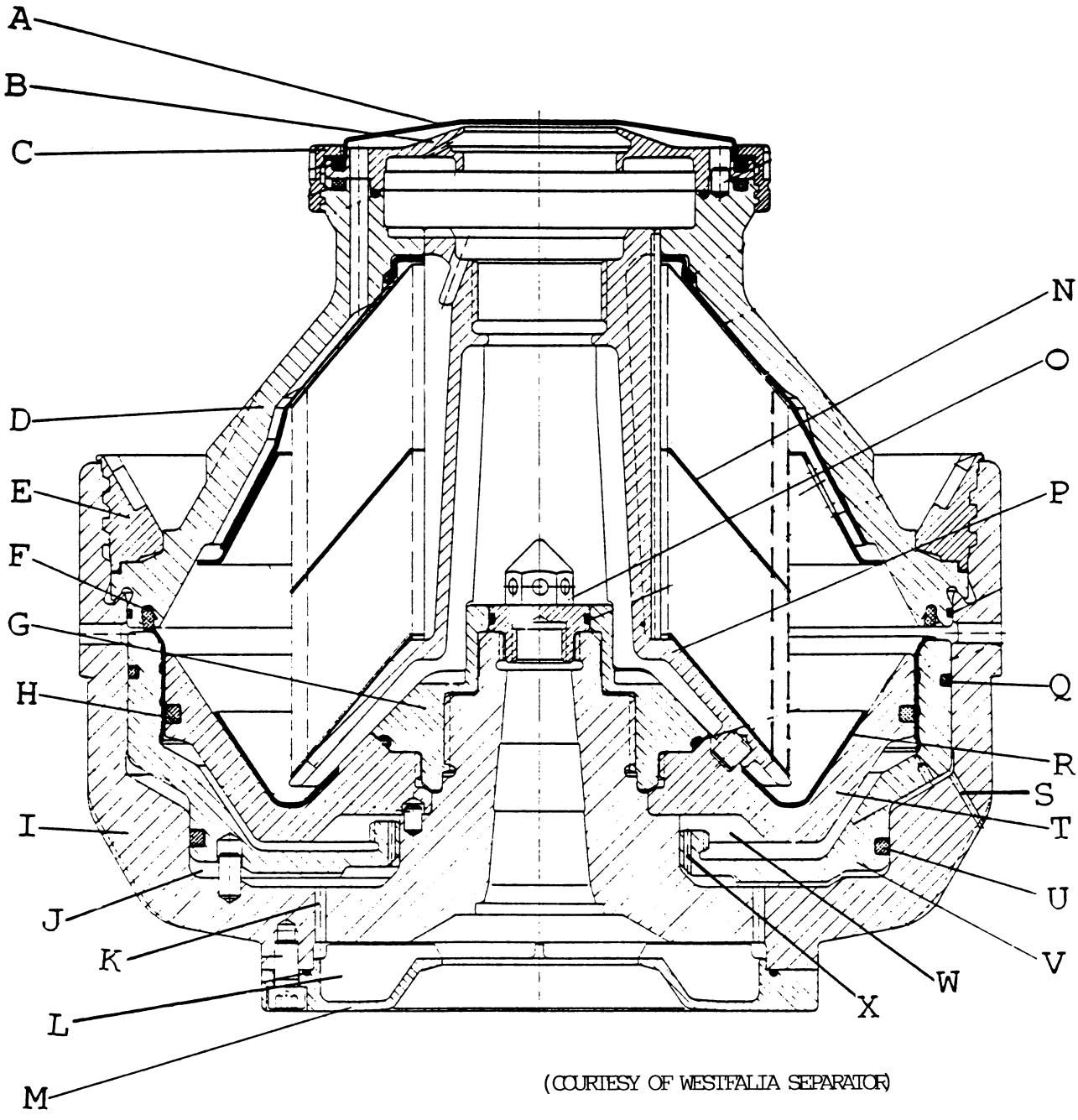

(COURTESY OF WESTFALIA SEPARATOR)

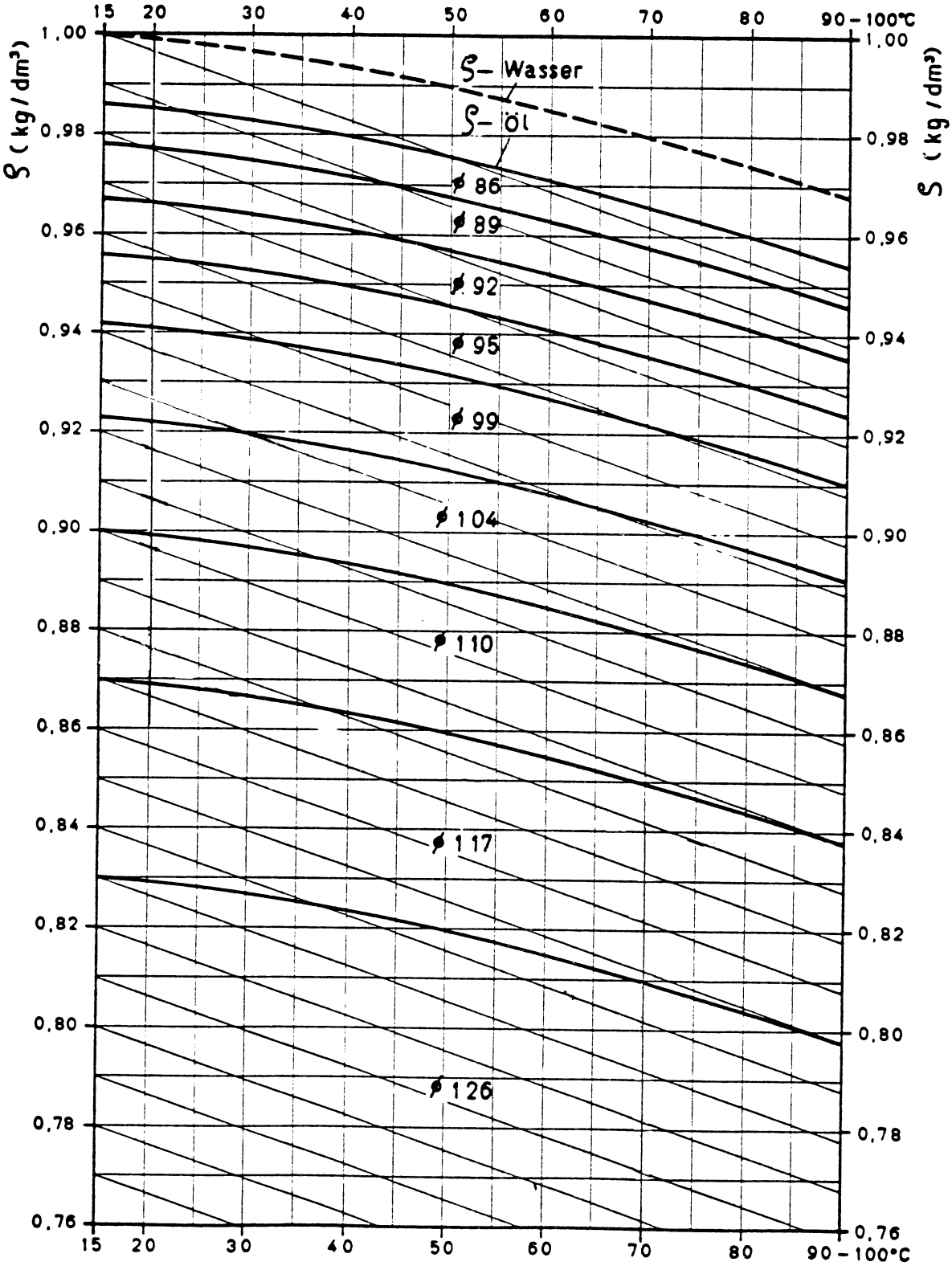

Separating temperature

(COURTESY OF WESTFALIA SEPARATOR)

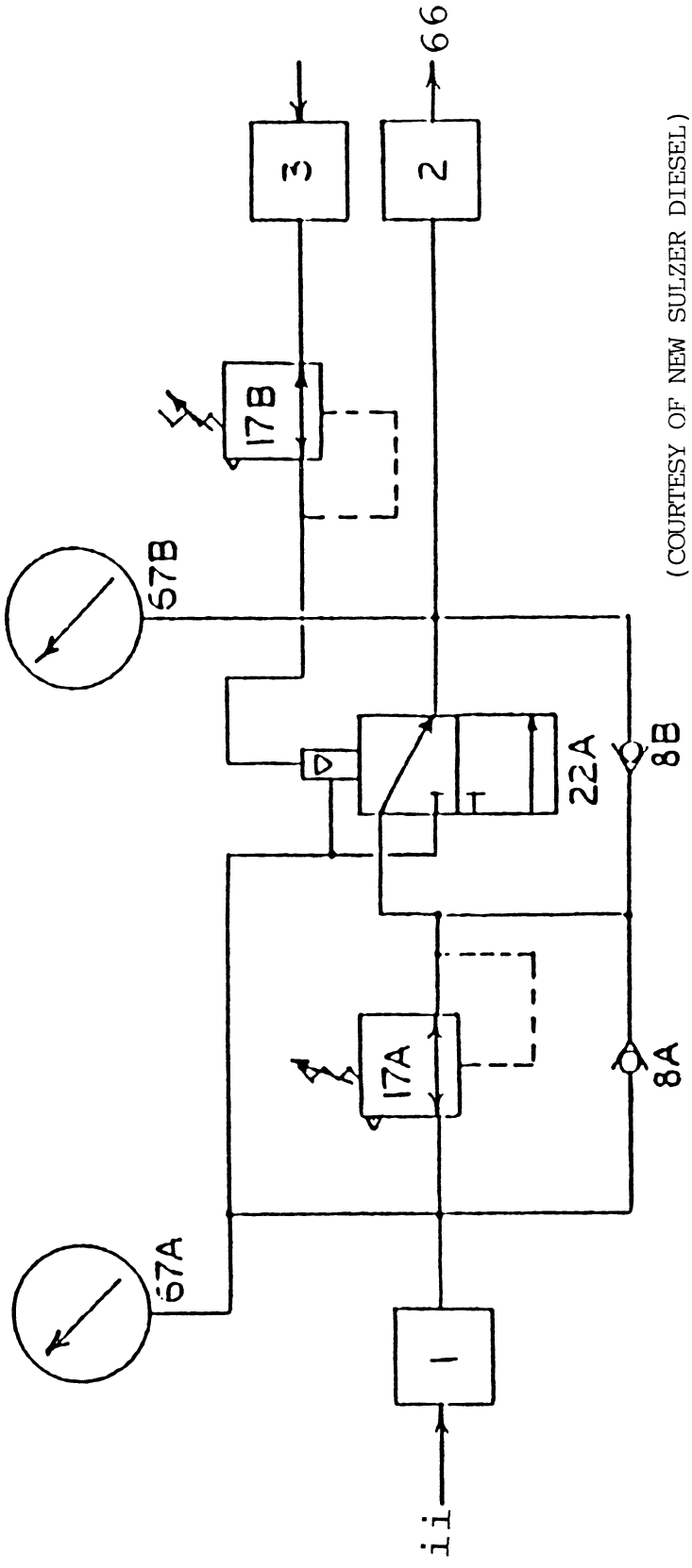

(COURTESY OF NEW SULZER DIESEL)

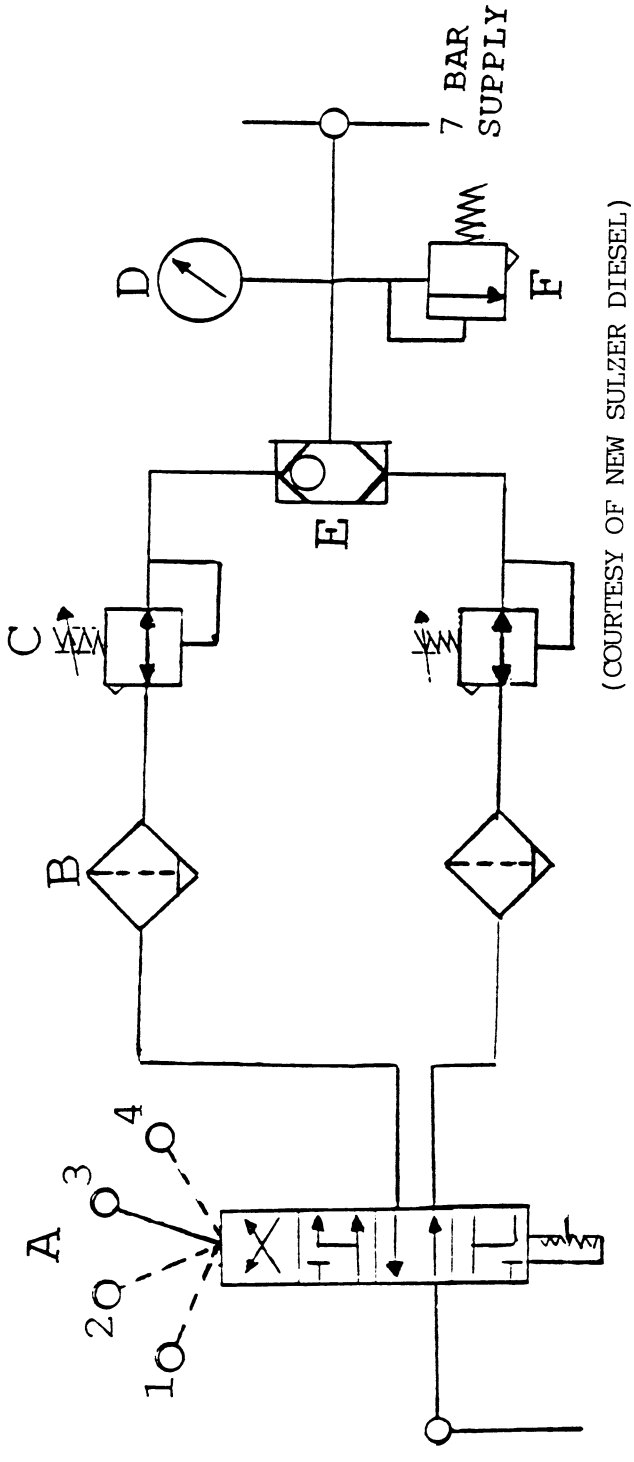

(COURTESY OF NEW SULZER DIESEL)

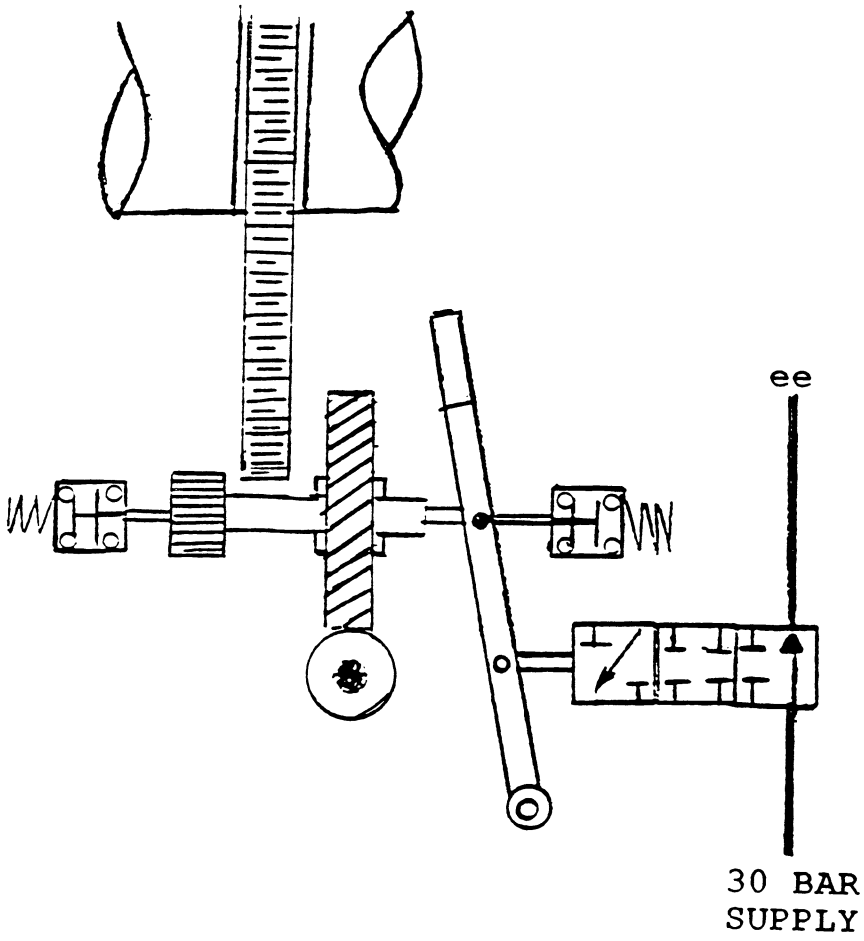

(COURTESY OF NEW SULZER DIESEL)