MO-0070

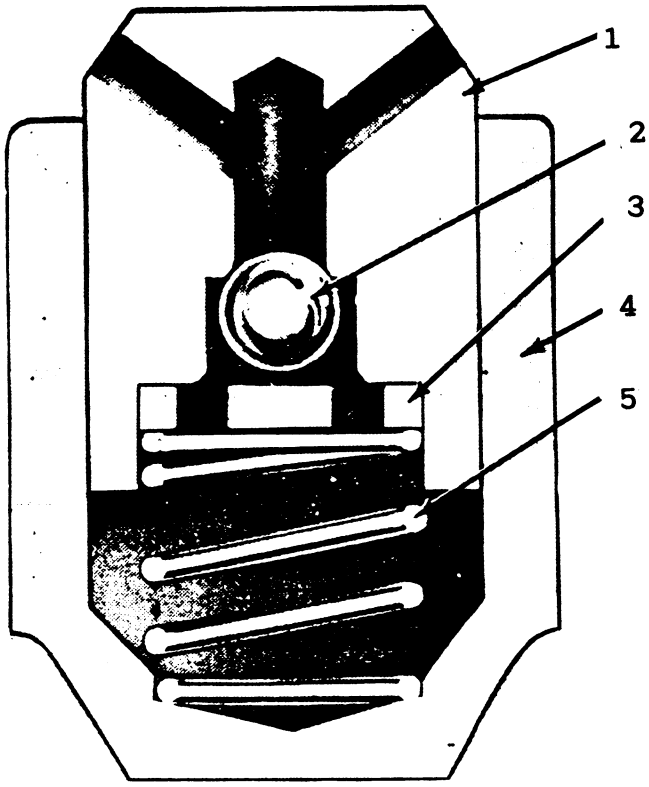

MO-0071

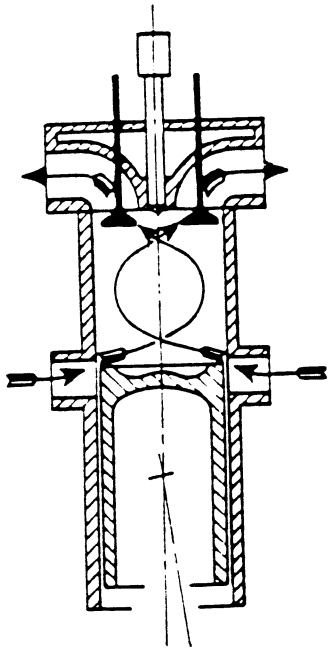

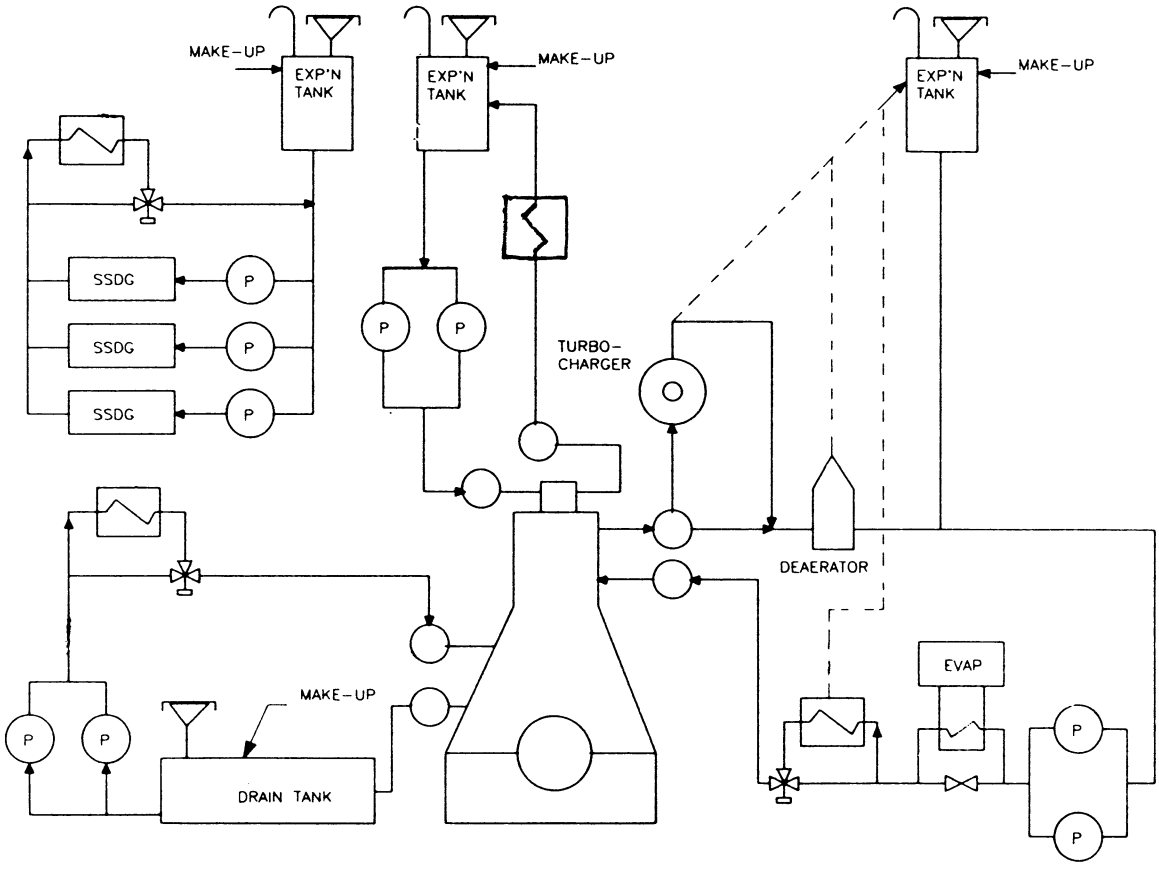
MAKE-UP
EXP'N TANK
MAKE-UP
EXP'N TANK
MAKE-UP
EXP'N TANK
SSDG
SSDG
SSDG
P
P
P
P
P
TURBO-CHARGER
DEAERATOR
EVAP
MAKE-UP
DRAIN TANK
P
P
P
P

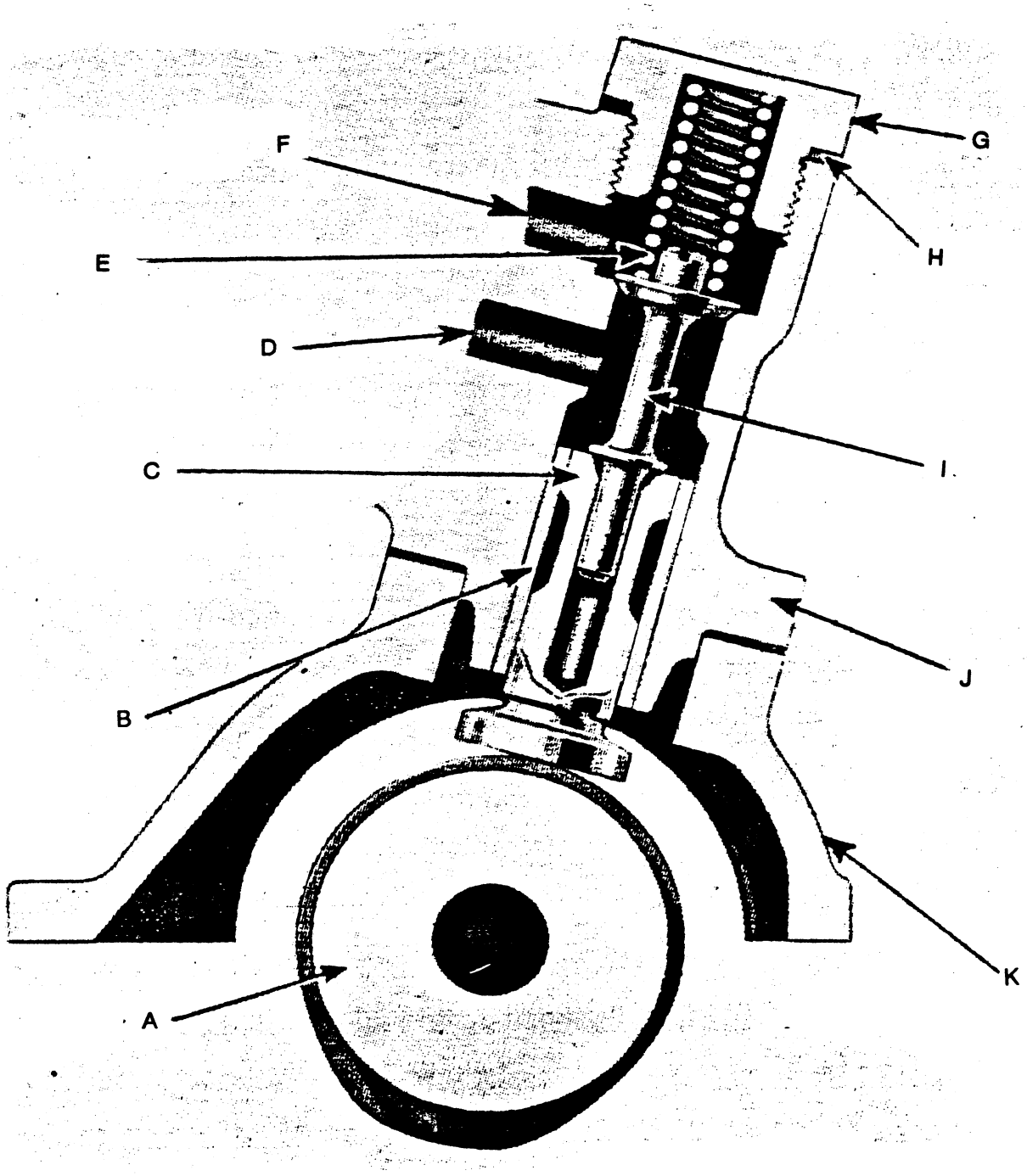
F
G
E
H
D
I
C
J
B
K
A

MO-0074

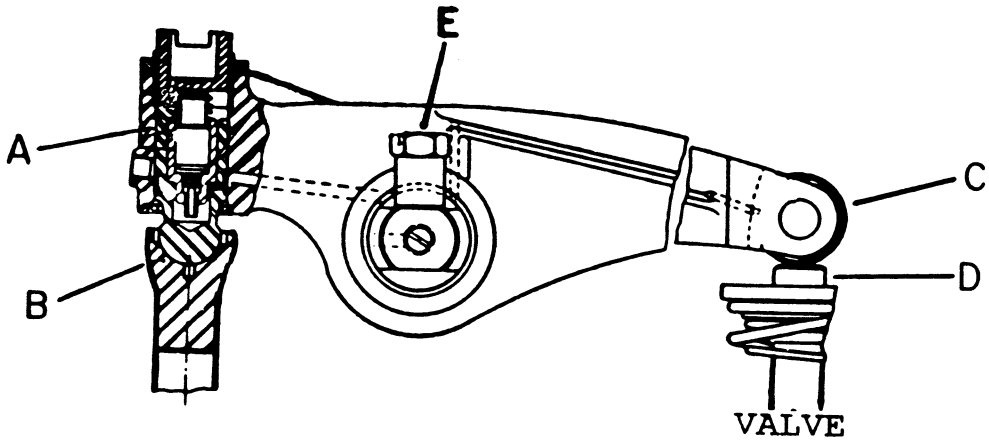

MO-0075

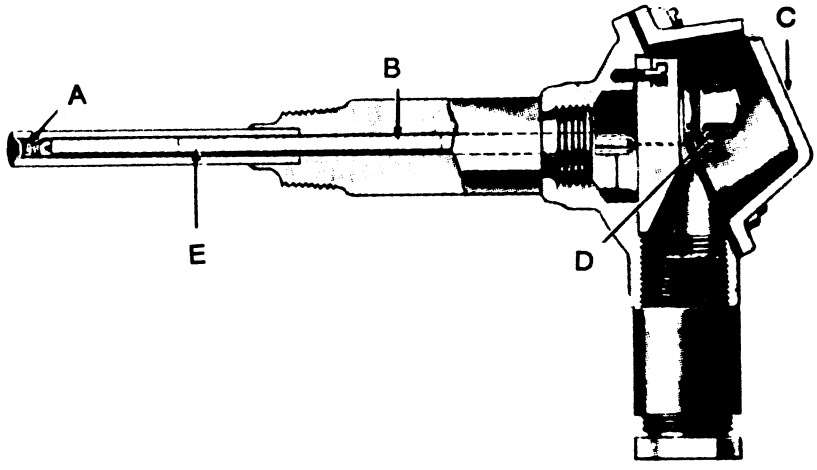

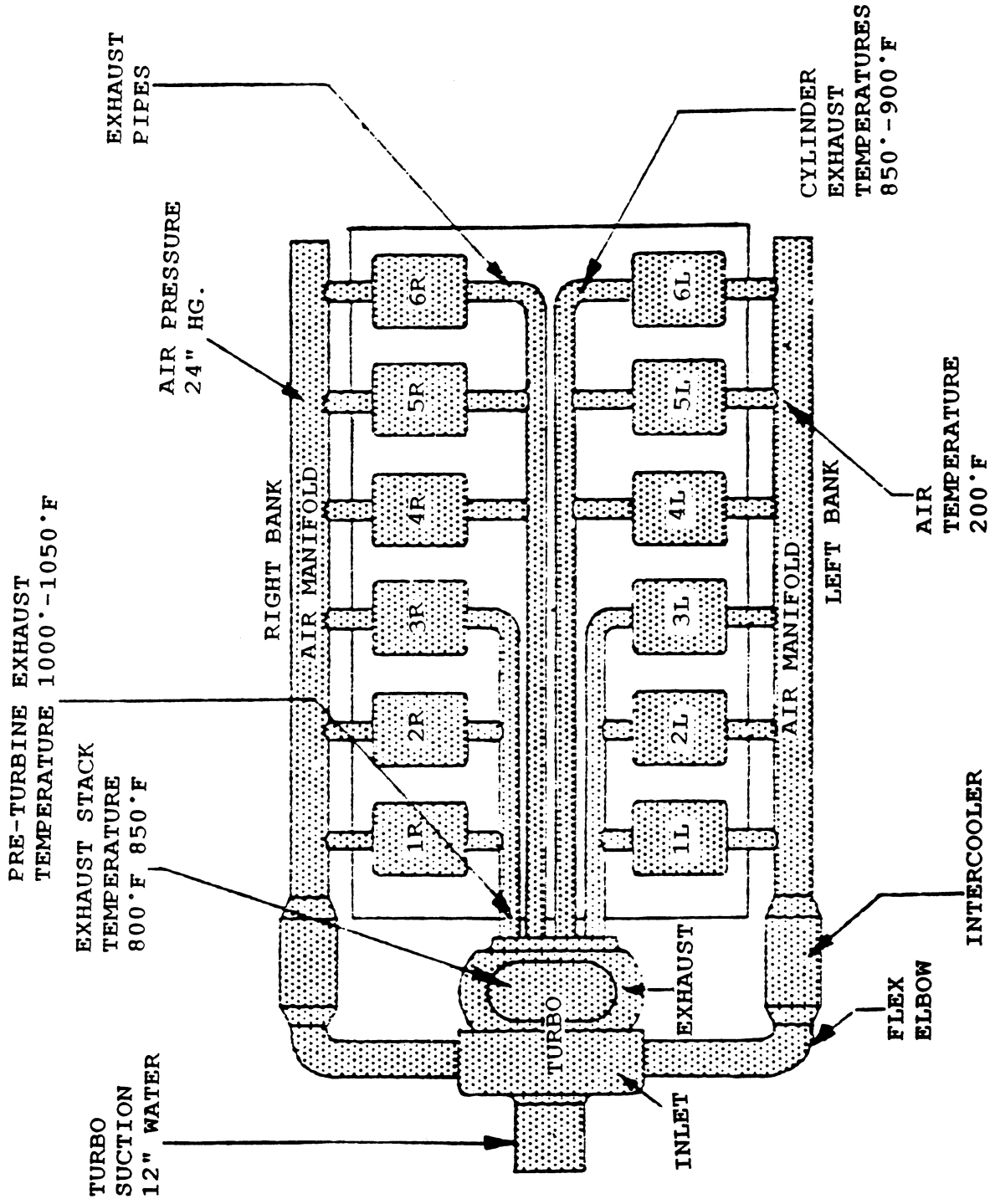
EXHAUST PIPES
AIR PRESSURE 24" HG.
PRE-TURBINE EXHAUST TEMPERATURE 1000°-1050°F
EXHAUST STACK TEMPERATURE 800°F 850°F
TURBO SUCTION 12" WATER
RIGHT BANK
AIR MANIFOLD
1R
2R
3R
4R
5R
6R
TURBO
INLET
EXHAUST
1L
2L
3L
4L
5L
6L
LEFT BANK
AIR MANIFOLD
CYLINDER EXHAUST TEMPERATURES 850°-900°F
AIR TEMPERATURE 200°F
INTERCOOLER
FLEX ELBOW

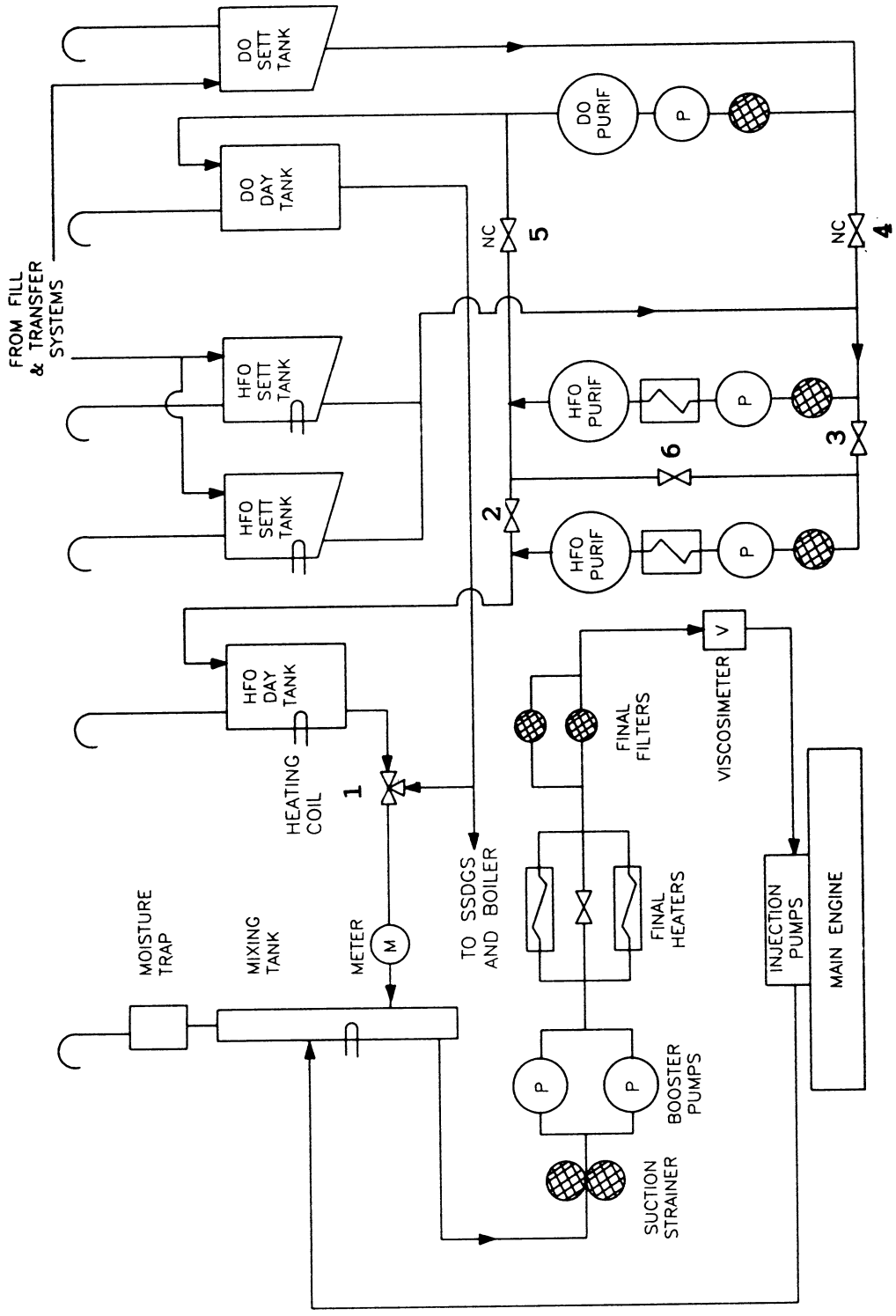
FROM FILL & TRANSFER SYSTEMS
DO SETT TANK
DO DAY TANK
HFO SETT TANK
HFO SETT TANK
HFO DAY TANK
HEATING COIL
1
MOISTURE TRAP
MIXING TANK
METER
M
TO SSDGS AND BOILER
NC
5
2
DO PURIF
P
HFO PURIF
P
HFO PURIF
P
NC
4
3
6
FINAL FILTERS
FINAL HEATERS
V
VISCOSIMETER
INJECTION PUMPS
MAIN ENGINE
P
P
BOOSTER PUMPS
SUCTION STRAINER

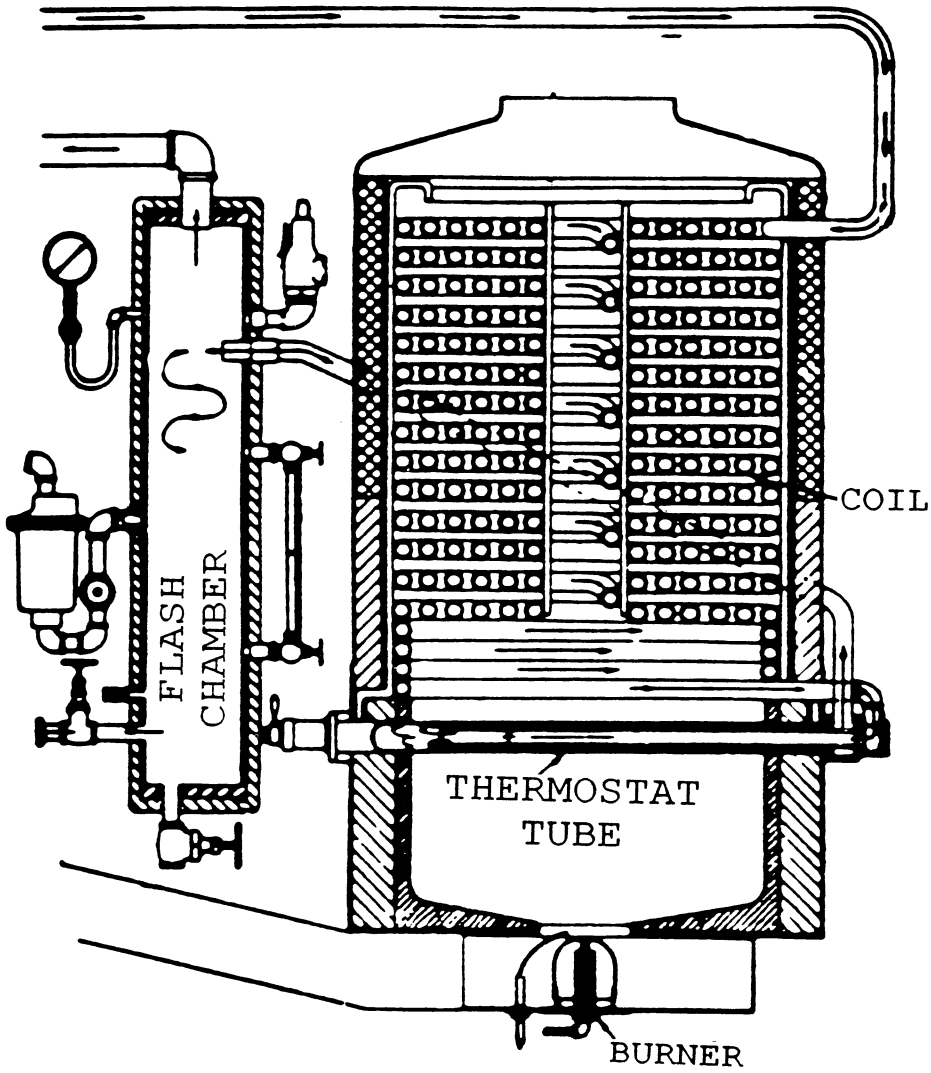
COIL
FLASH
CHAMBER
THERMOSTAT
TUBE
BURNER

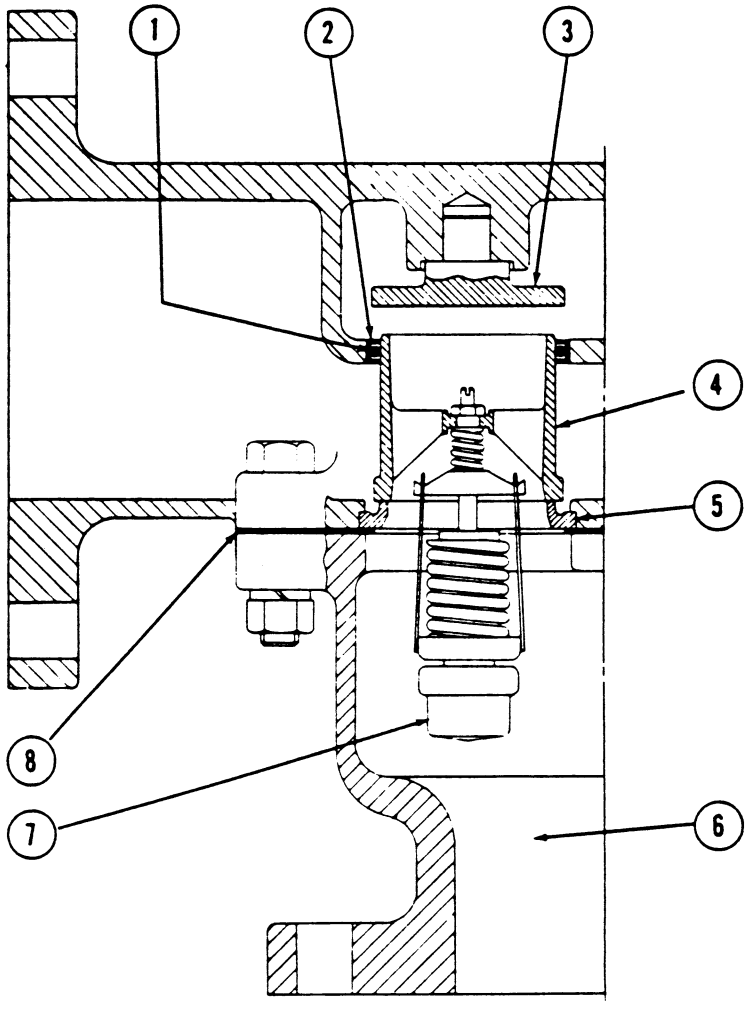
1
2
3
4
5
6
7
8

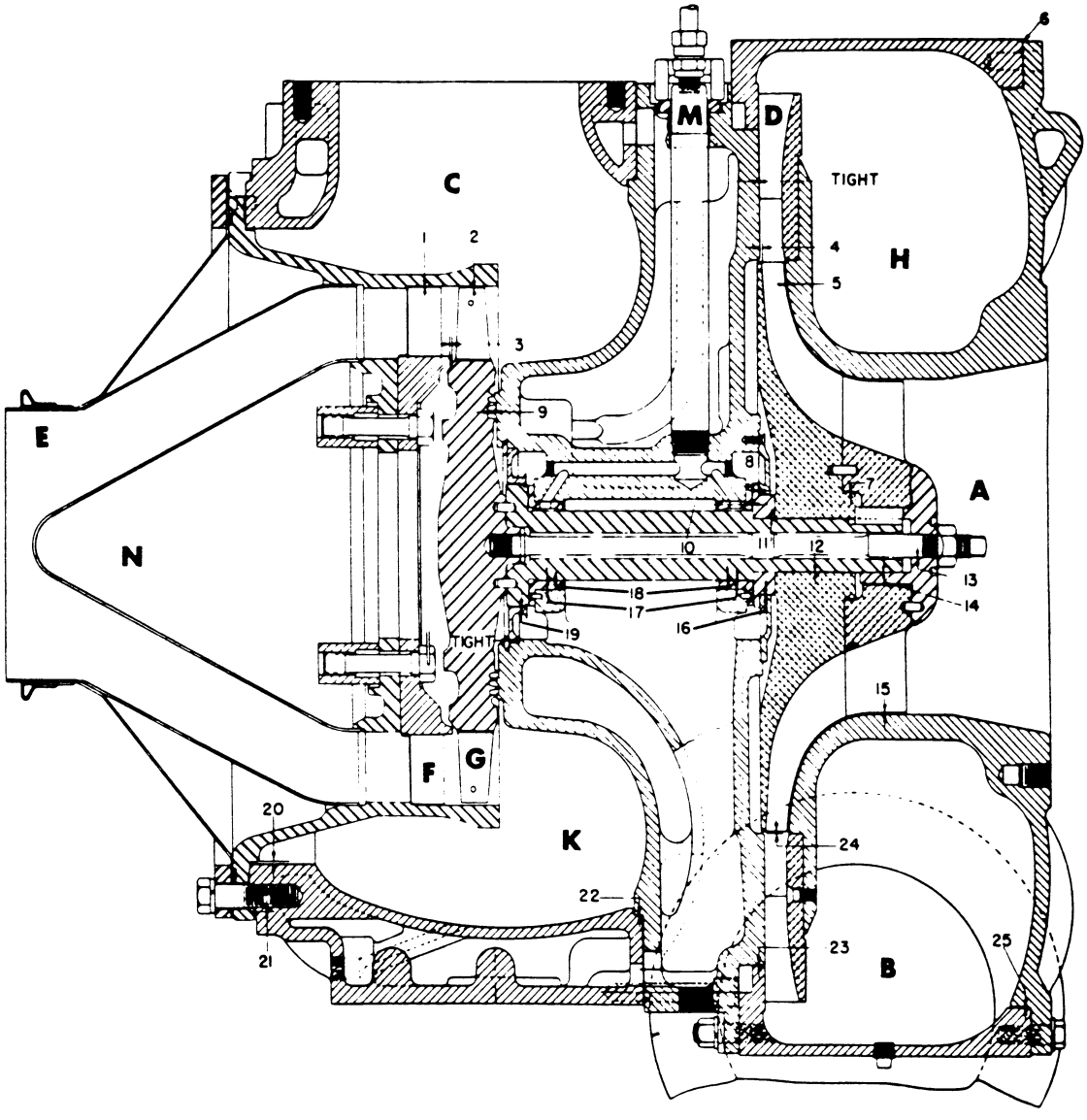
M
D
C
TIGHT
H
E
N
A
TIGHT
F
G
K
B
1
2
3
4
5
6
8
9
10
11
12
13
14
15
16
17
18
19
20
21
22
23
24
25

MO-0081

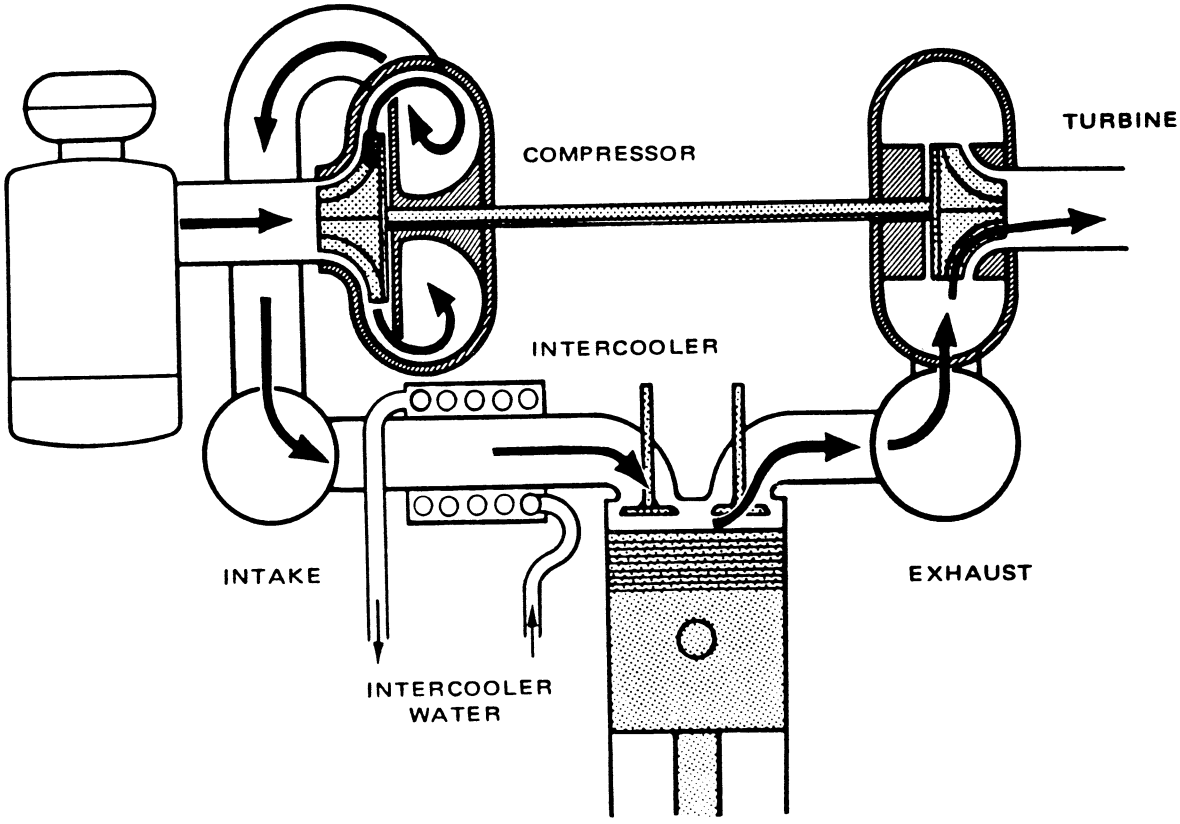

MO-0082

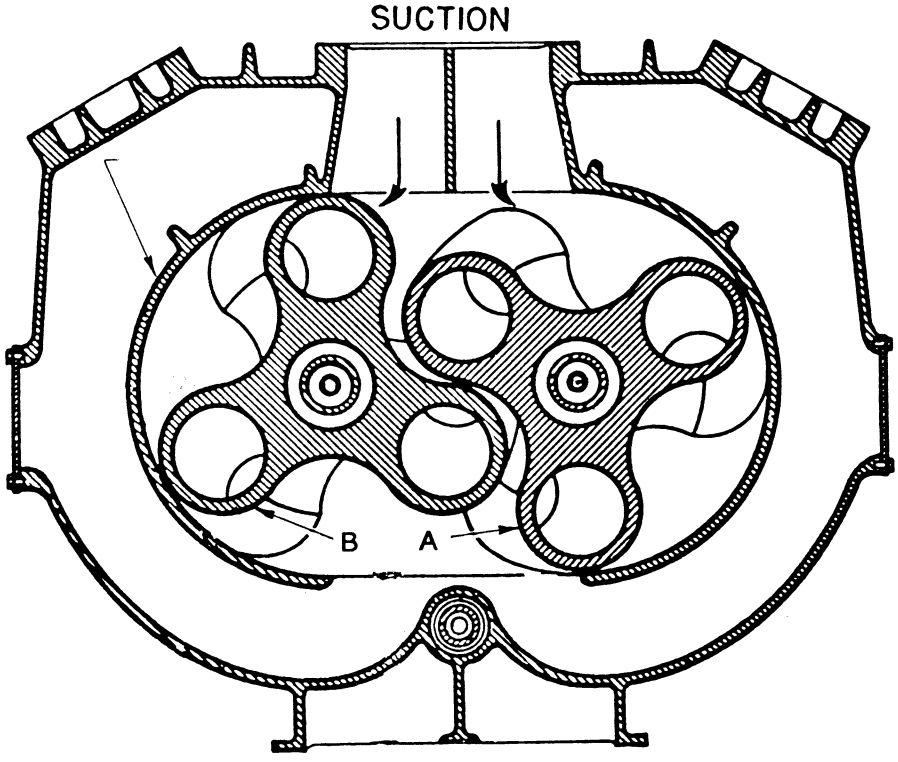

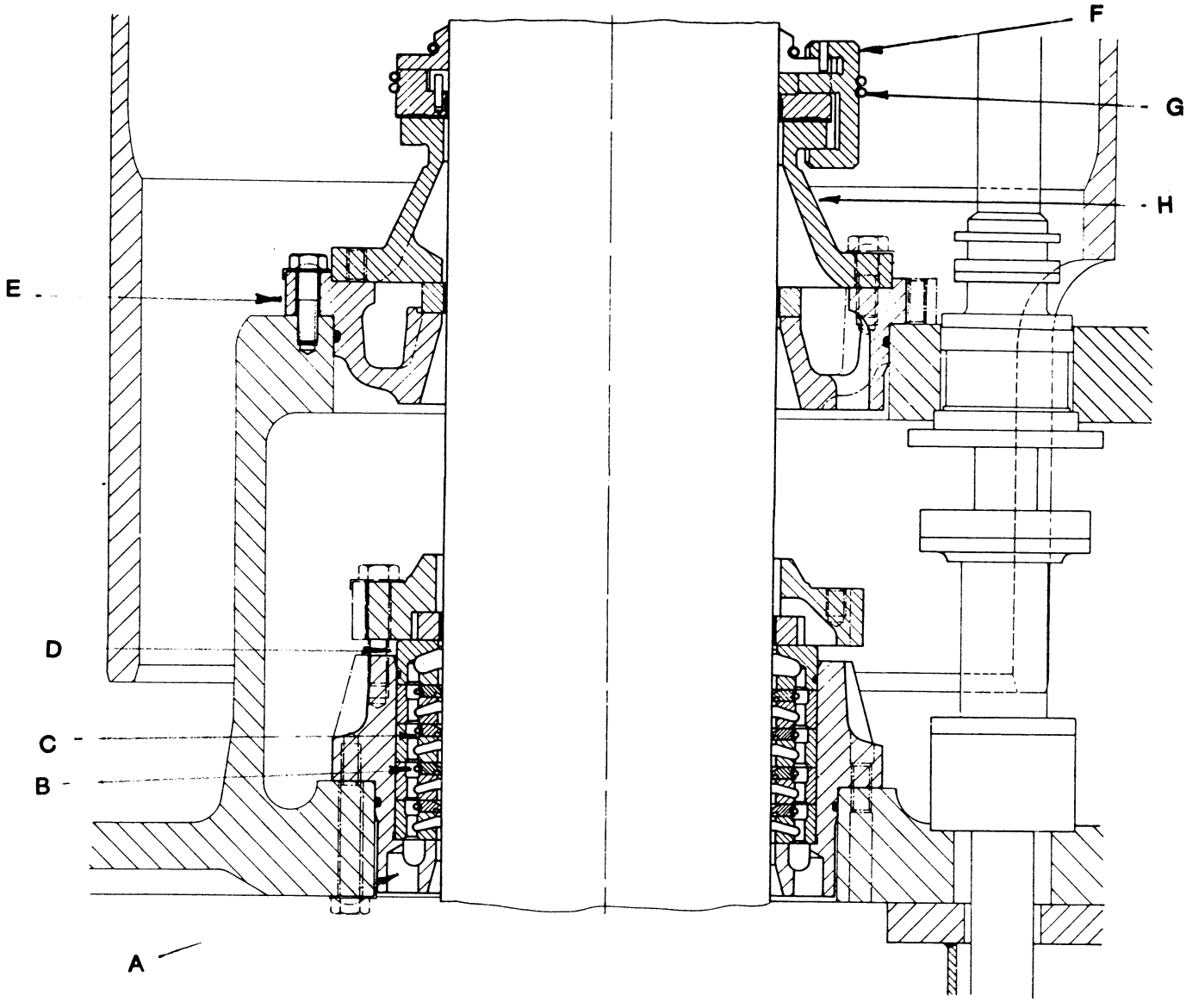
F
G
H
E
D
C
B
A

MO-0084

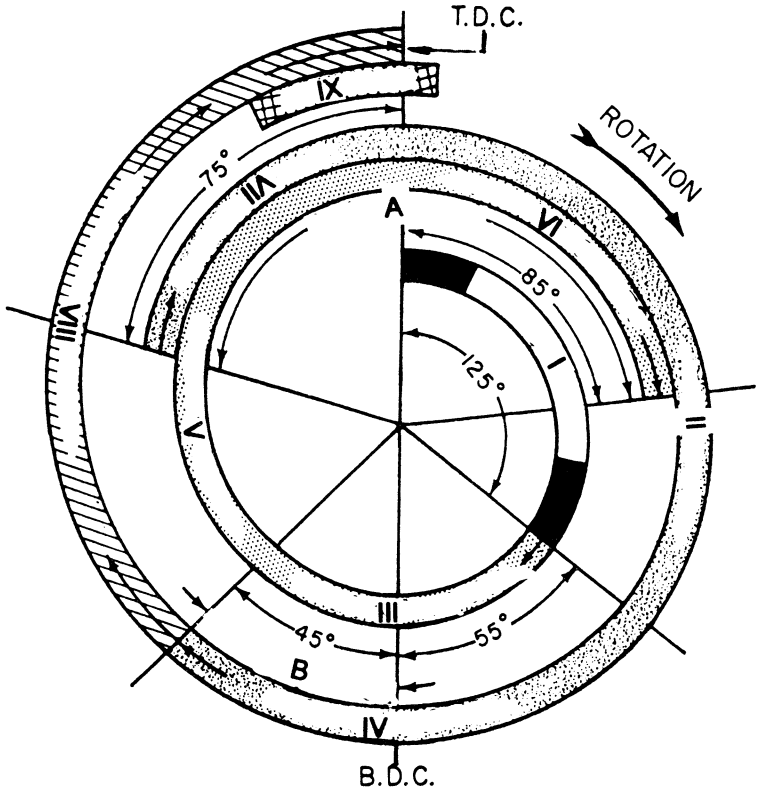

MO-0085

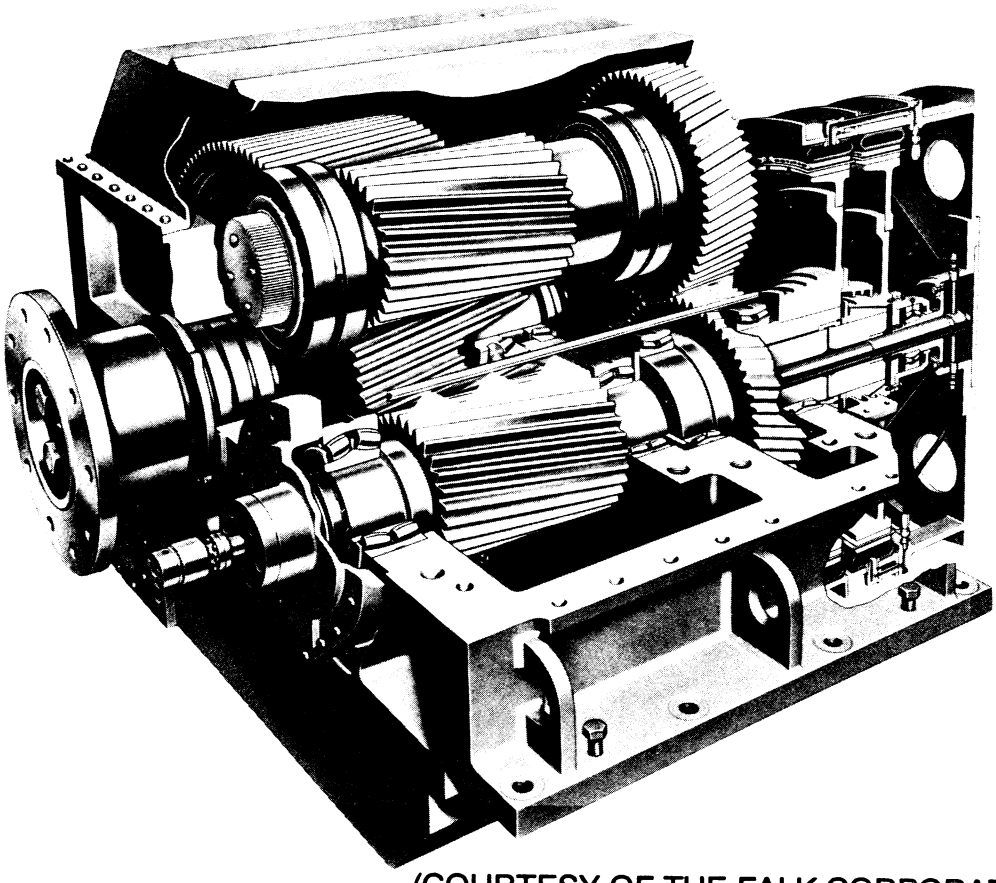

(COURTESY OF THE FALK CORPORATION)

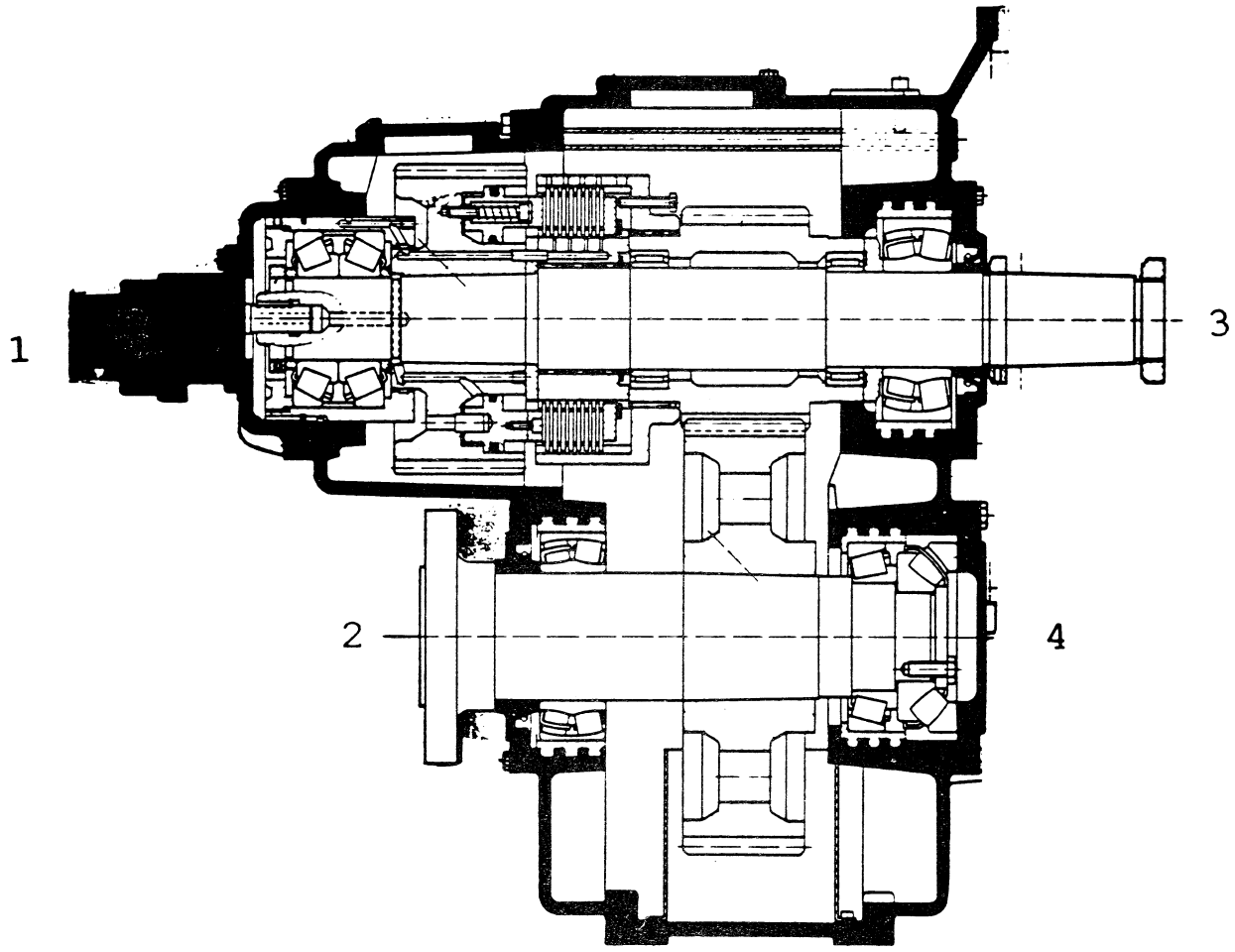
1
2
3
4

MO-0087

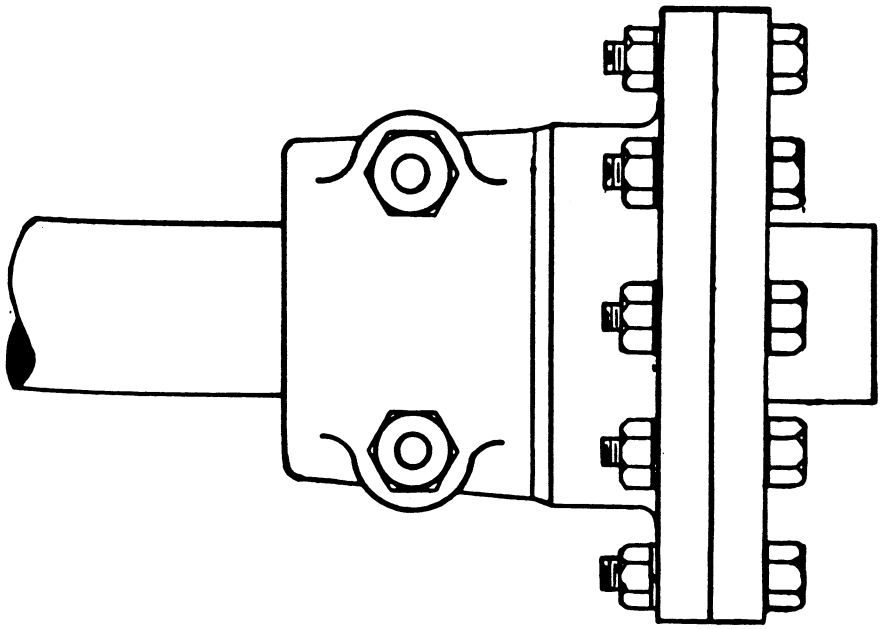
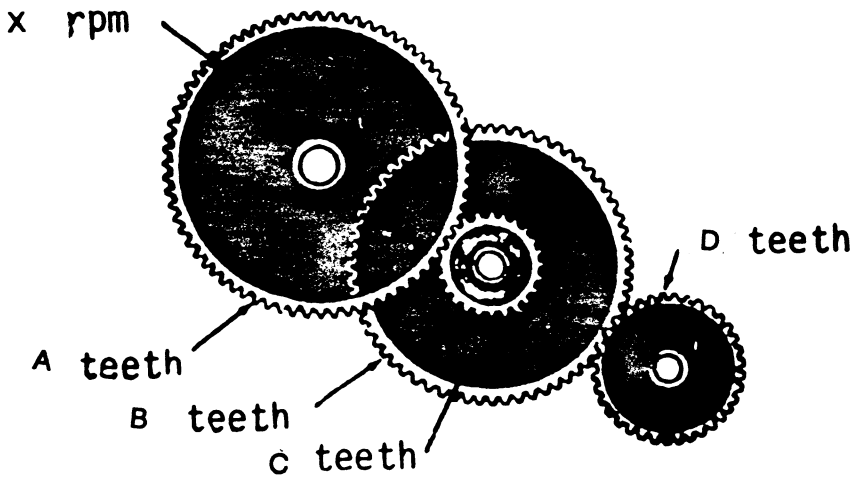
MO-0088