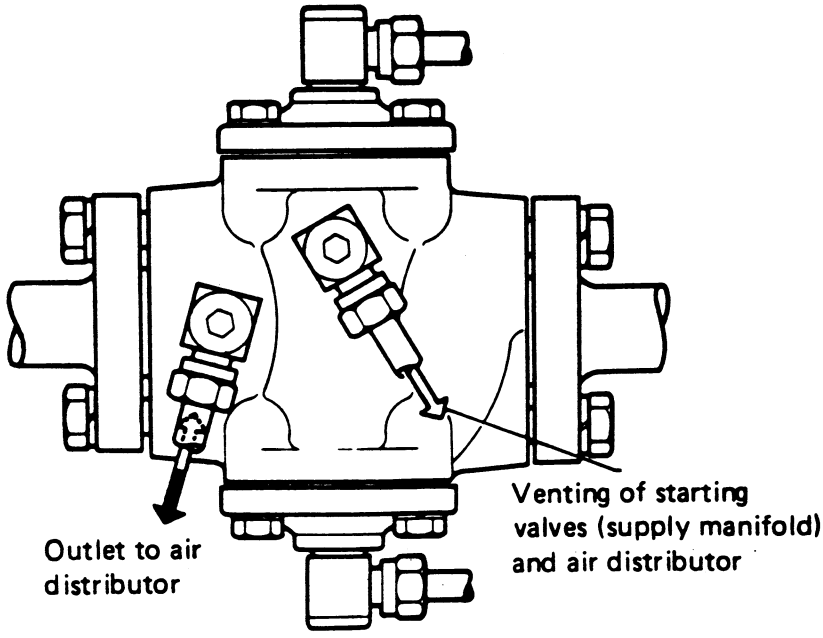
Venting of starting valves (supply manifold) and air distributor
Outlet to air distributor

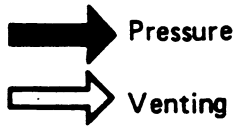
Pressure
Venting

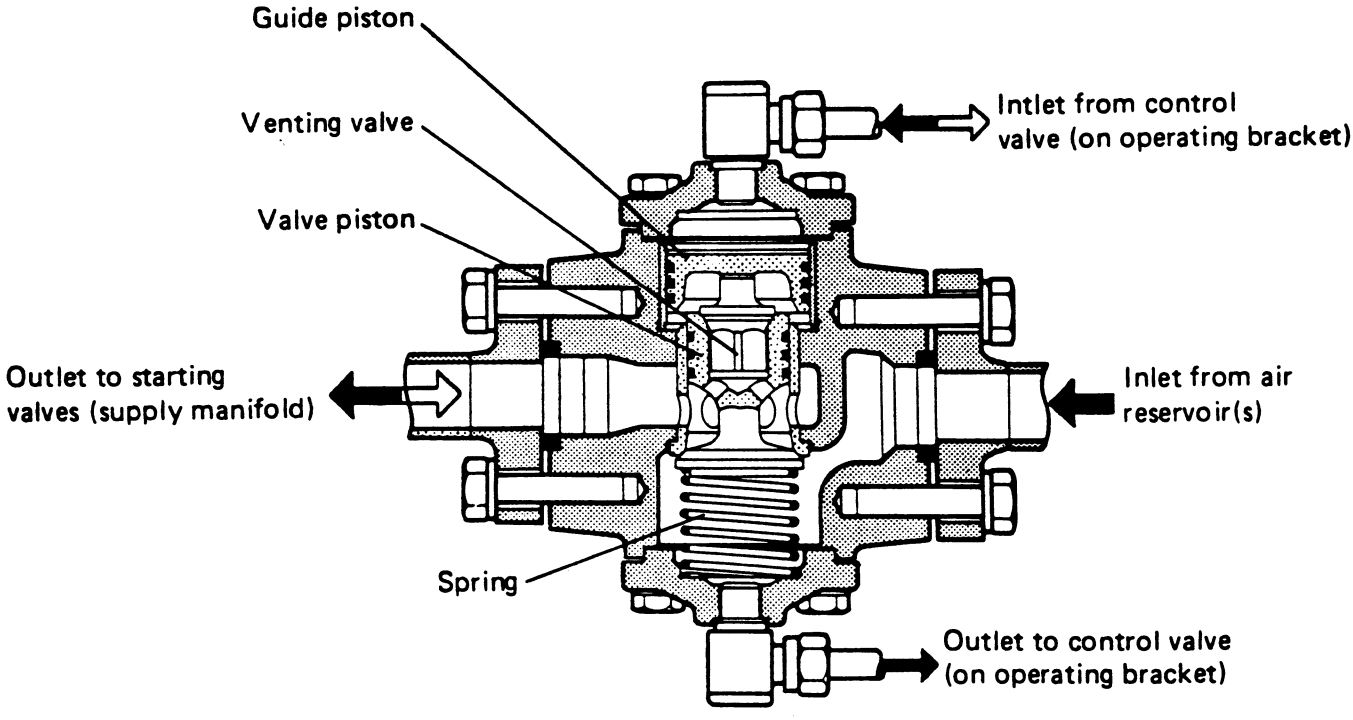
Guide piston
Venting valve
Valve piston
Intlet from control valve (on operating bracket)
Outlet to starting valves (supply manifold)
Inlet from air reservoir(s)
Spring
Outlet to control valve (on operating bracket)

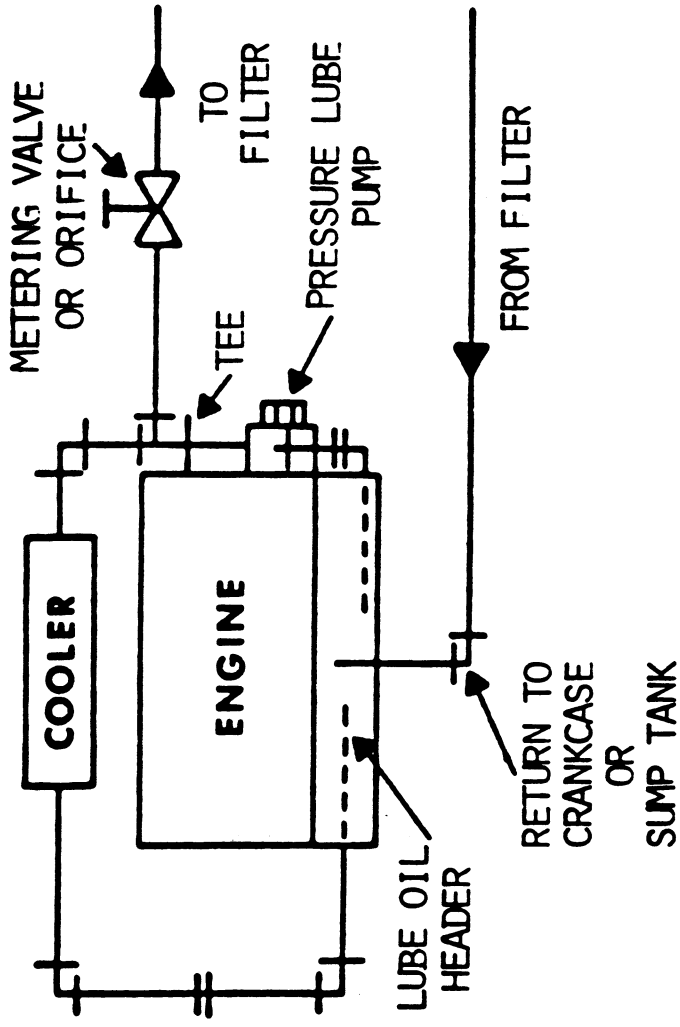
METERING VALVE
OR ORIFICE
TO
FILTER
PRESSURE LUBE
PUMP
FROM FILTER
TEE
COOLER
ENGINE
RETURN TO
CRANKCASE
OR
SUMP TANK
LUBE OIL
HEADER

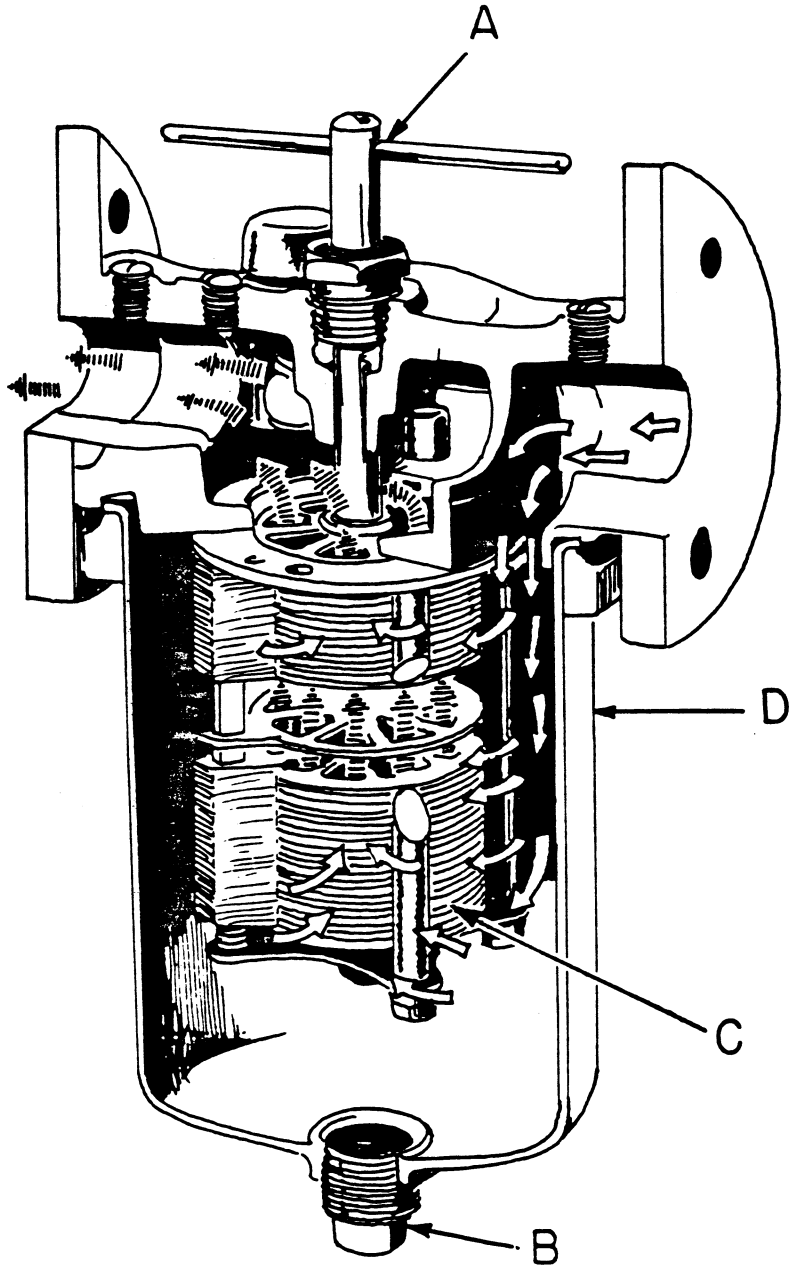
A
D
C
B

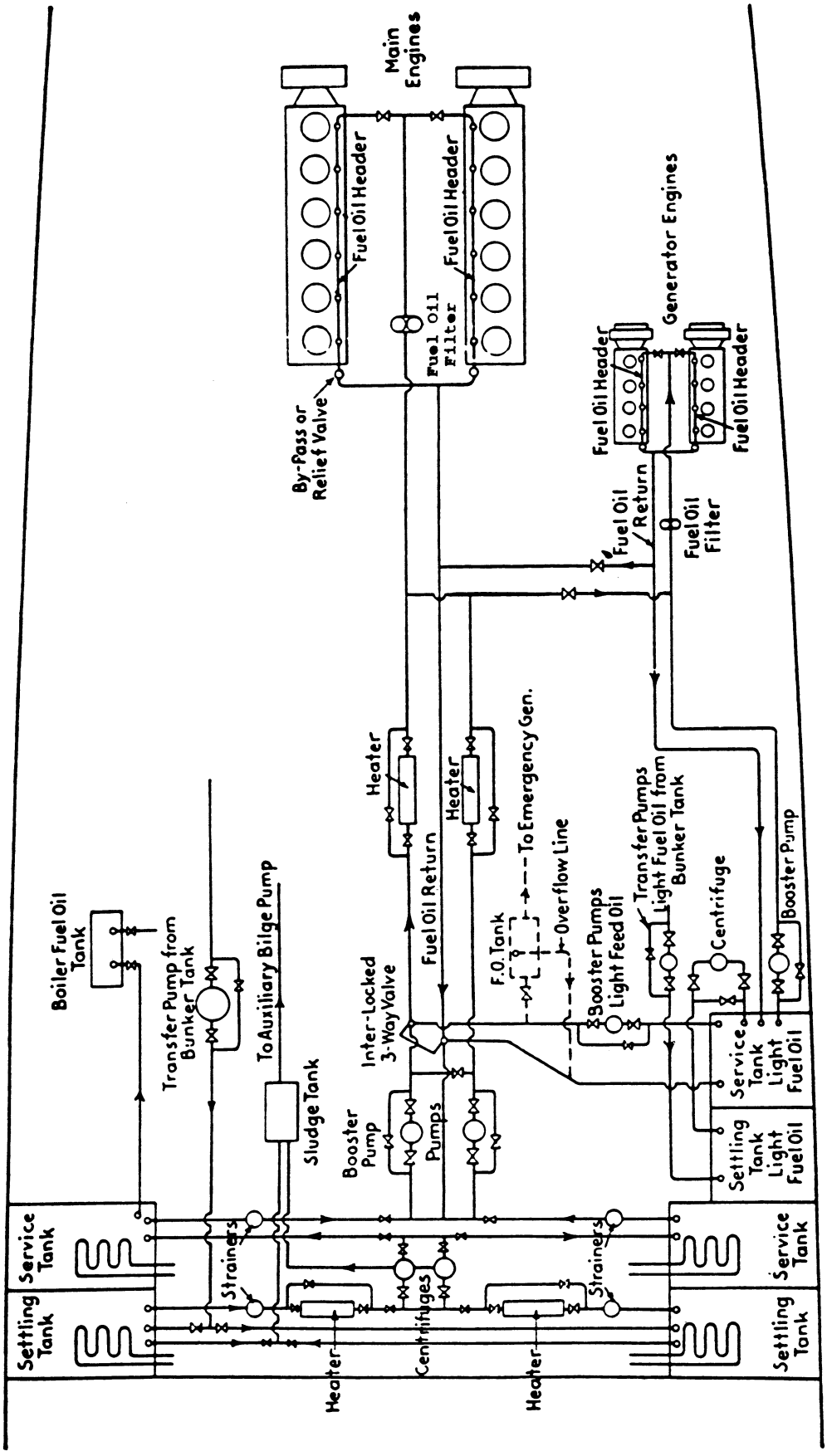
Main Engines
Fuel Oil Header
Fuel Oil Header
Fuel Oil Filter
By-Pass or Relief Valve
Generator Engines
Fuel Oil Header
Fuel Oil Header
Fuel Oil Return
Fuel Oil Filter
Heater
Heater
To Emergency Gen.
Overflow Line
Transfer Pumps
Light Fuel Oil from Bunker Tank
Centrifuge
Booster Pump
Boiler Fuel Oil Tank
Transfer Pump from Bunker Tank
To Auxiliary Bilge Pump
Fuel Oil Return
F.O. Tank
Inter-Locked 3-Way Valve
Booster Pumps
Light Feed Oil
Service Tank Light Fuel Oil
Sludge Tank
Booster Pump
Pumps
Settling Tank Light Fuel Oil
Service Tank
Strainers
Strainers
Service Tank
Settling Tank
Centrifuges
Settling Tank
Heater
Heater

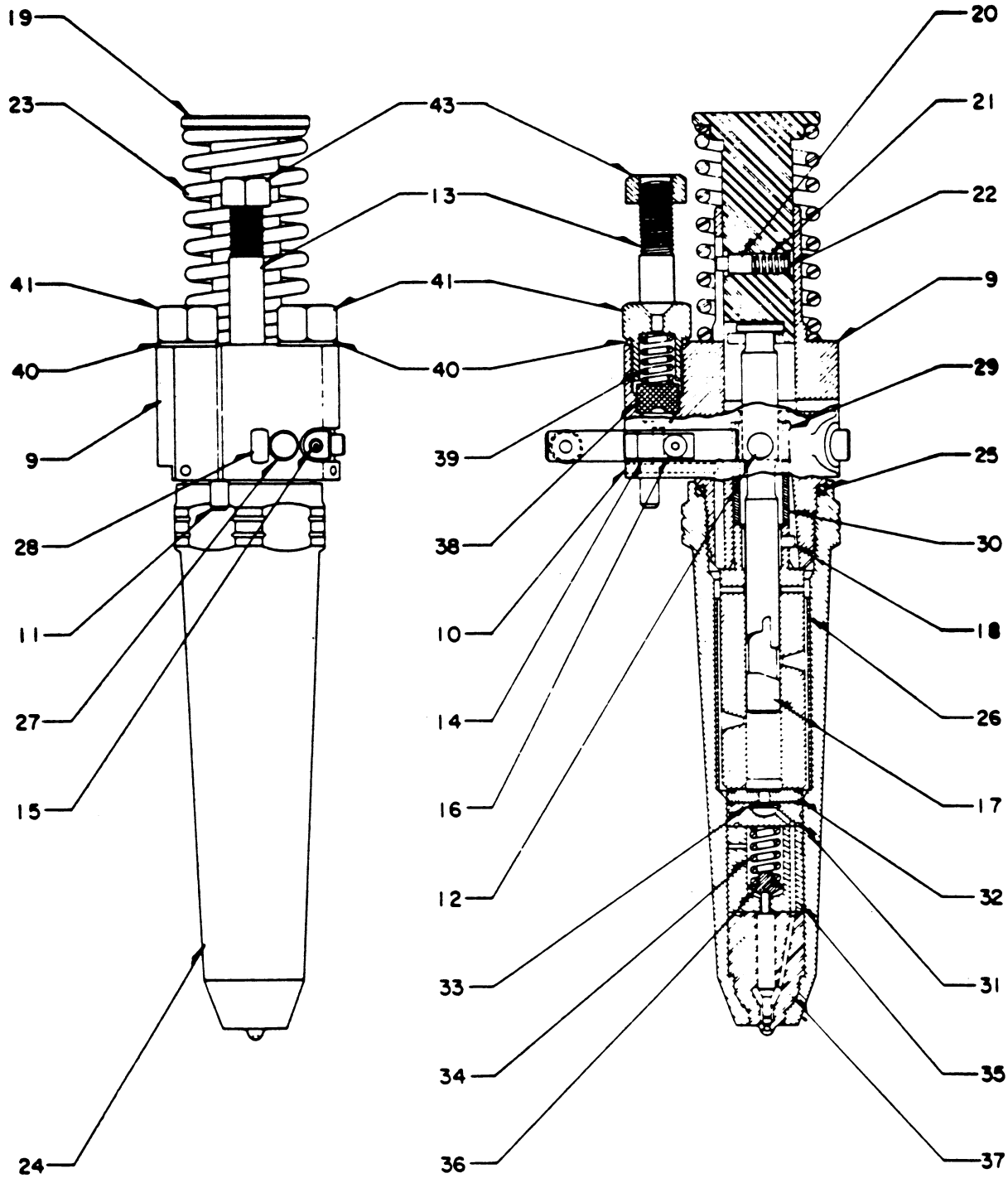
19
23
41
40
9
28
11
27
15
24
43
13
41
40
39
38
10
14
16
12
33
34
36
20
21
22
9
29
25
30
18
26
17
32
31
35
37

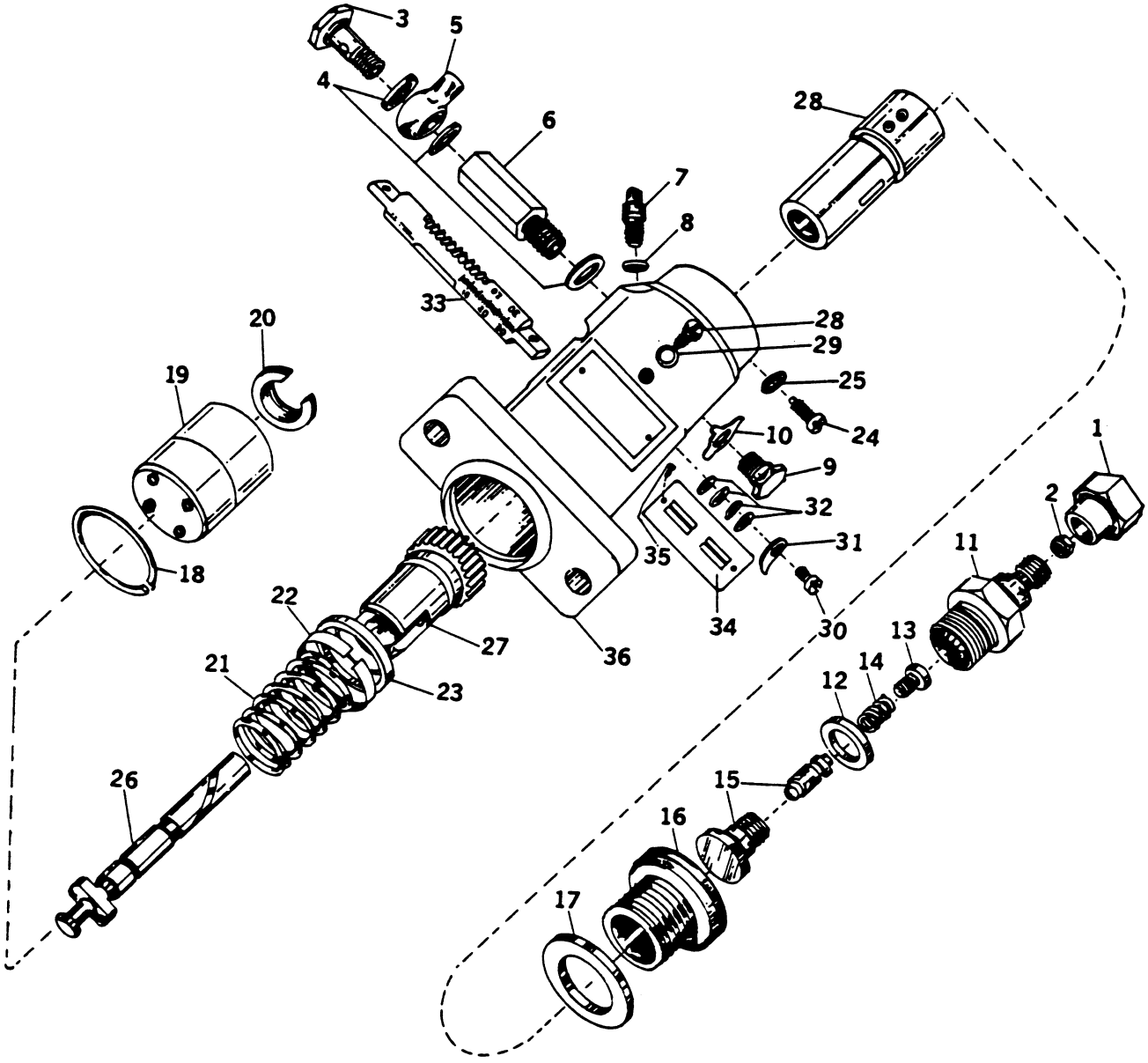
3
5
4
6
28
7
8
33
20
28
29
19
25
24
10
1
9
2
32
31
11
18
35
22
34
30
13
27
36
14
21
23
12
26
15
16
17

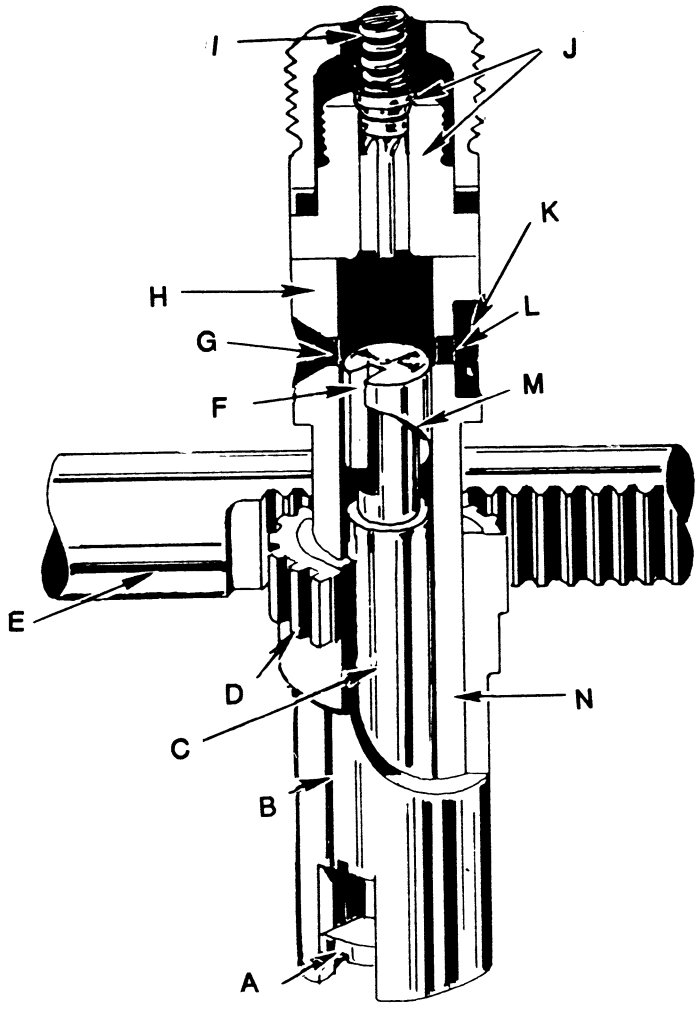
I
J
K
H
L
G
M
F
E
D
N
C
B
A

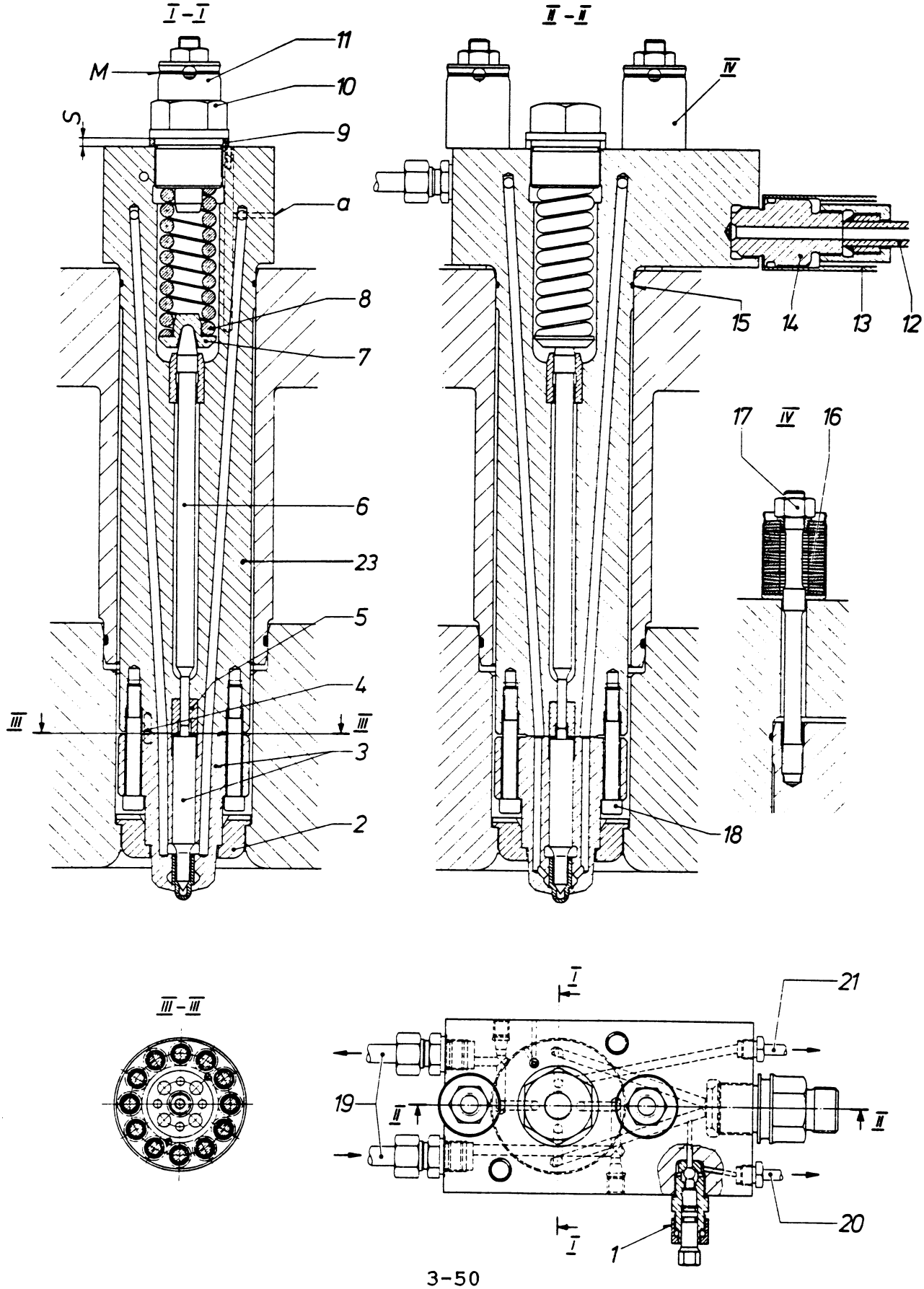
I-I
II-II
III-III
M
S
a
1
2
3
4
5
6
7
8
9
10
11
12
13
14
15
16
17
18
19
20
21
23
IV

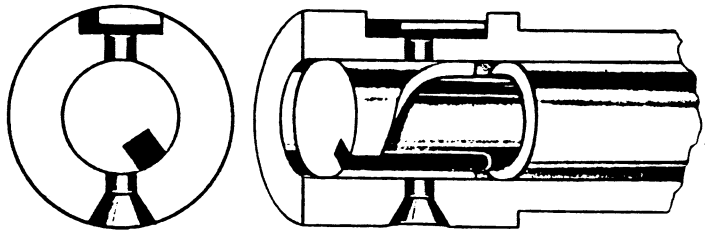

FIG. C

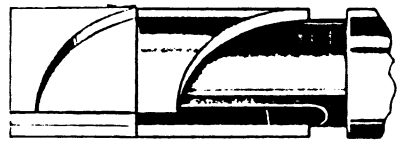

FIG. B

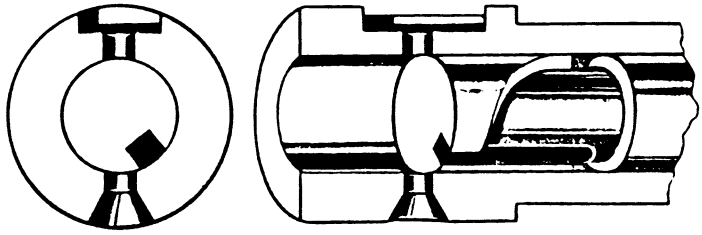

FIG. A

LOW PRESSURE
15 lbs. Steam – 30 lbs. Water

HIGH PRESSURE
150 to 250 lbs. Steam

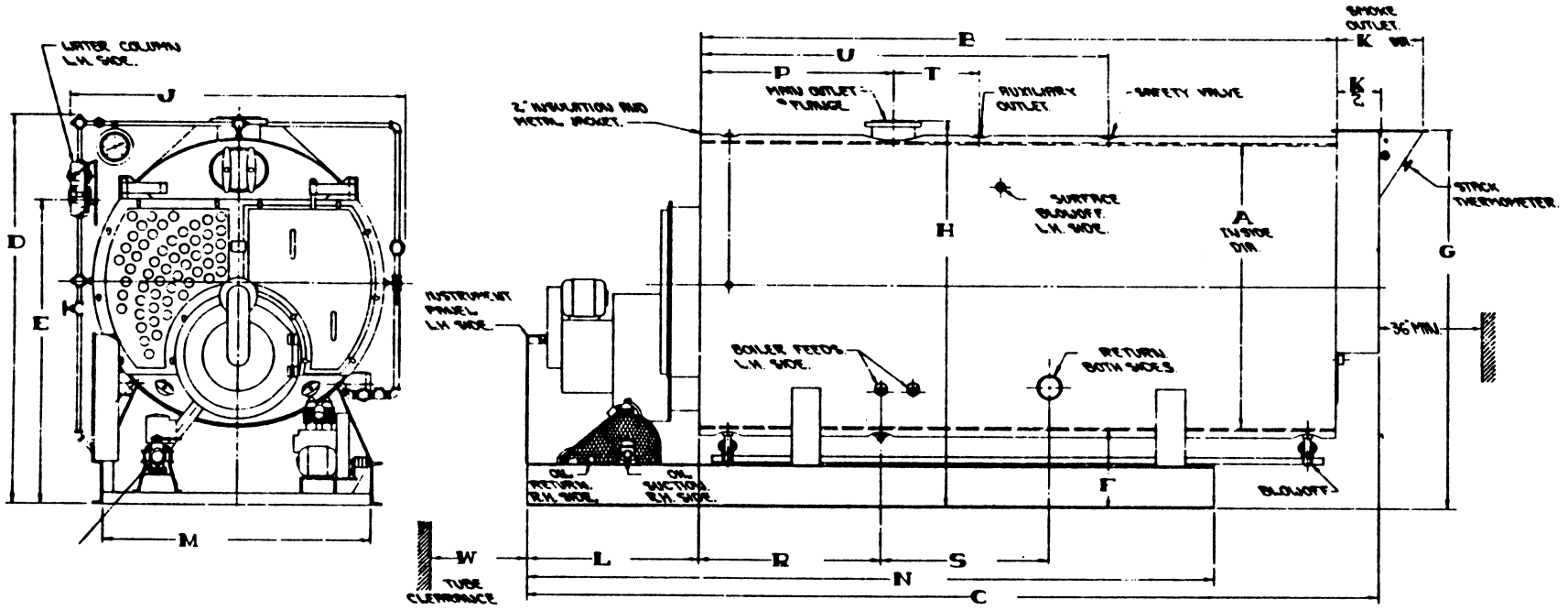

Note: Three transverse saddles, 530 thru 540.

SPECIFICATIONS AND DIMENSION DATA

CATALOG NUMBER OF UNIT		510	512	514	516	518	522	524	526	528	530	534	535	536	538	540
Rating - Horsepower, Max.	H.P.	75	100	125	150	200	250	300	350	400	500	600	750	900	1000	1200
- Steam Per Hour (Feed 212° F)	Lbs.	2585	3450	4310	5180	6900	8600	10350	12100	13800	17250	20700	25875	31050	34500	41400
- Steam Radiation EDR	Sq. Ft.	10465	13950	17440	20925	27900	34875	41850	48825	55800	69750	83700	104625	125550	139500	167400
- Water Radiation EDR	Sq. Ft.	16740	22320	27900	33480	44640	55800	66960	78120	89280	111600	133920	167400	200880	223200	267840
- BTU Per Hour	1000's	2511	3350	4185	5025	6695	8370	10044	11718	13392	16740	20088	25110	30132	33480	40176

MO-0064

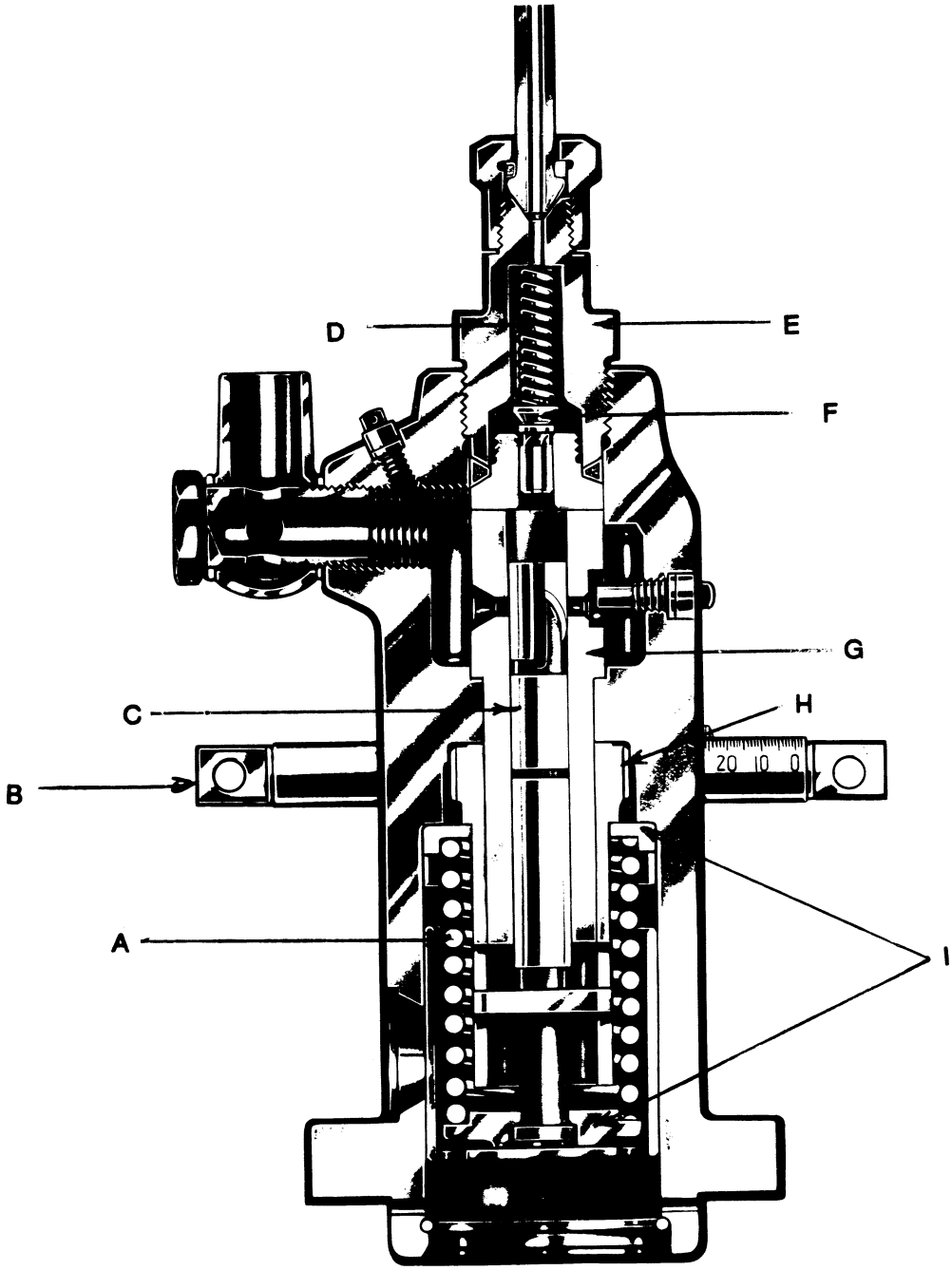
D
E
F
G
C
H
B
20 10 0
A
I

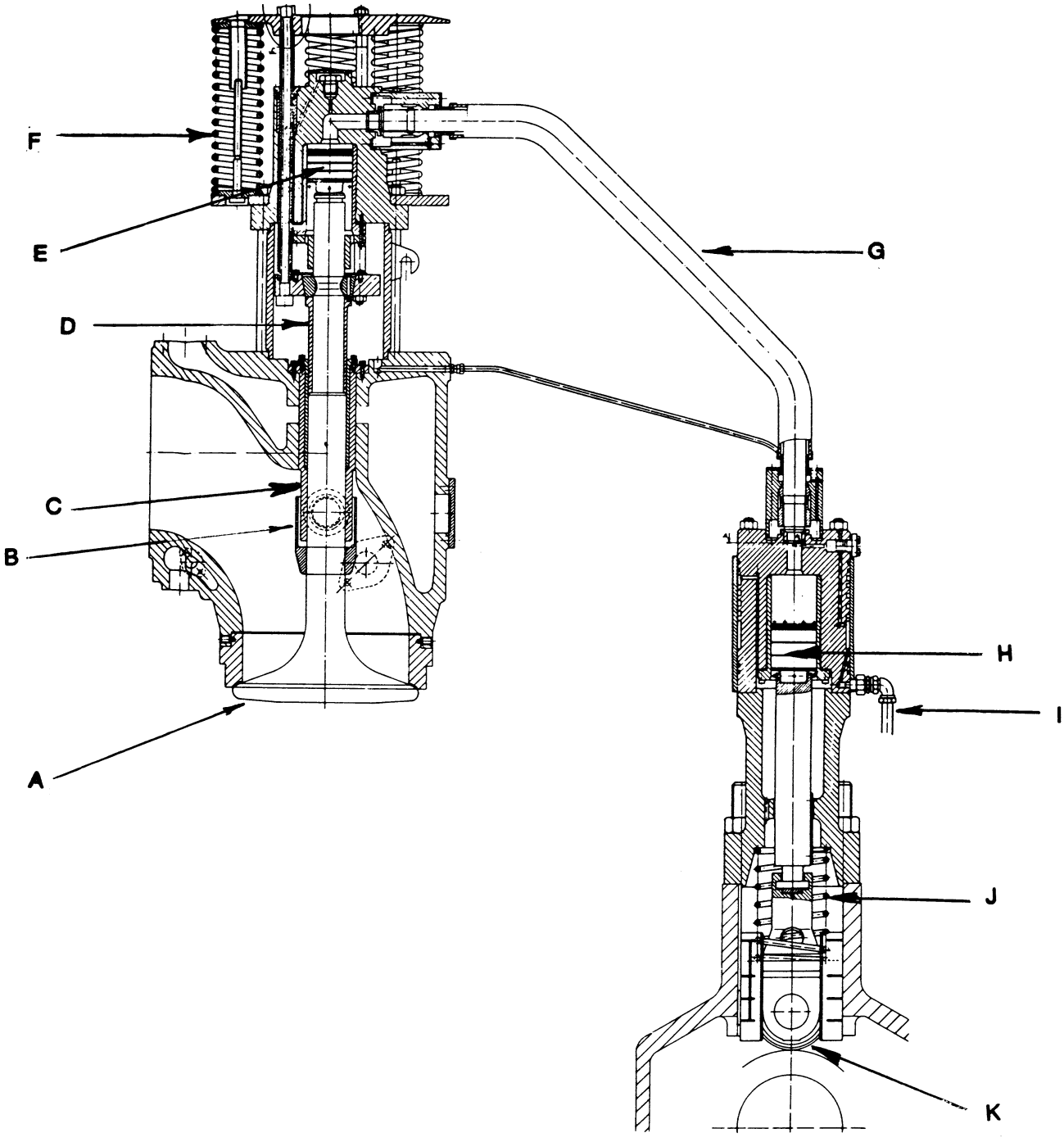
F
E
D
C
B
A
G
H
I
J
K

MO-0067

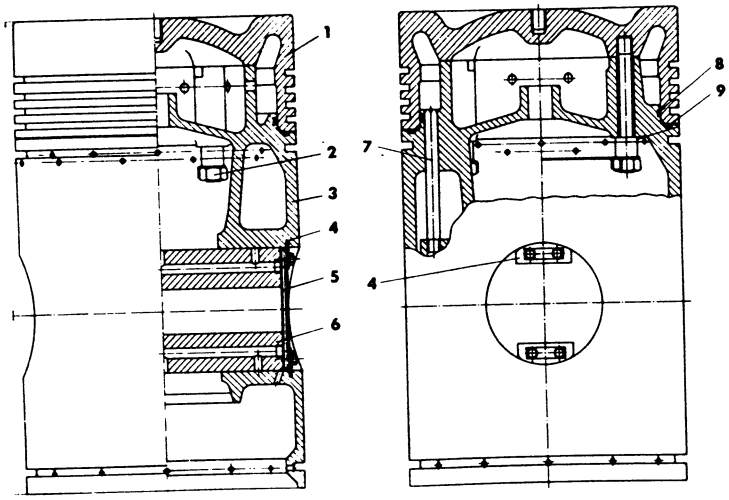

MO-0068

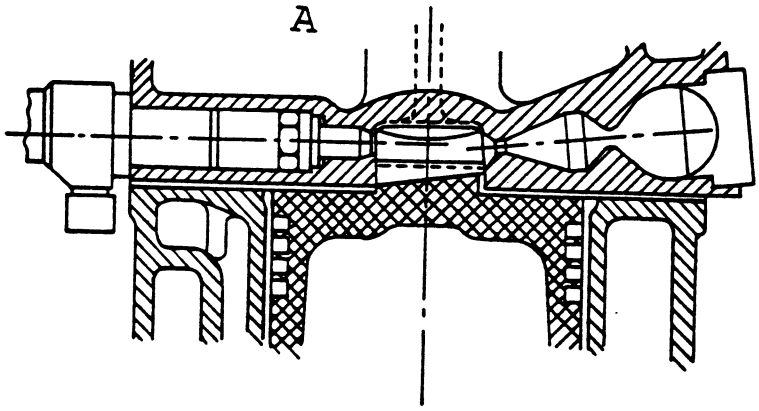

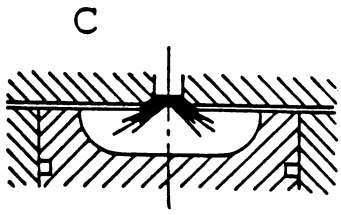

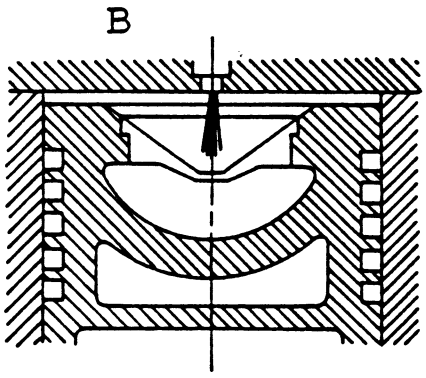

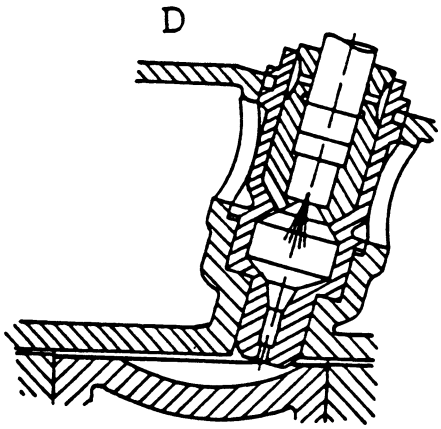

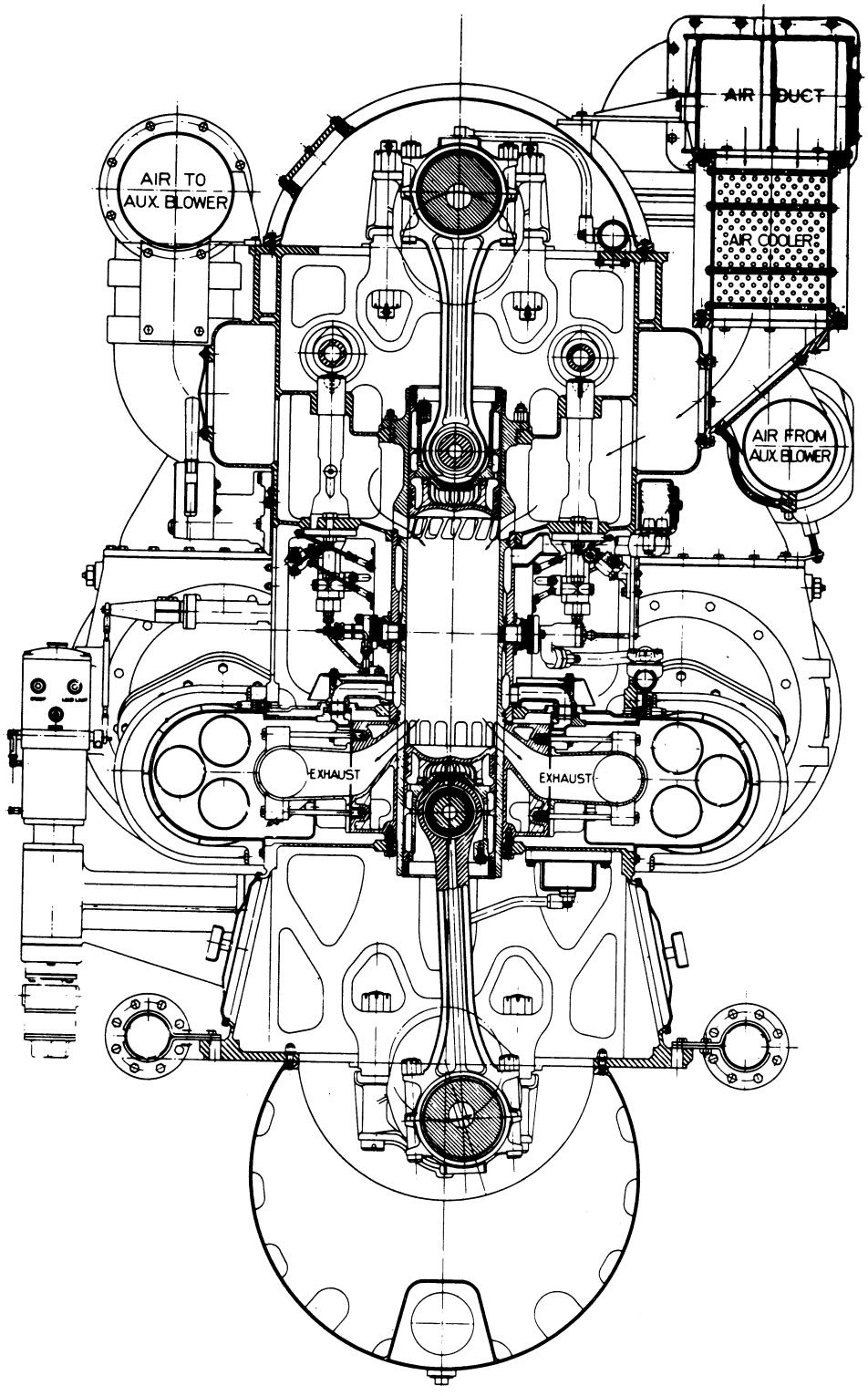
AIR TO
AUX. BLOWER
AIR DUCT
AIR COOLER
AIR FROM
AUX. BLOWER
EXHAUST
EXHAUST