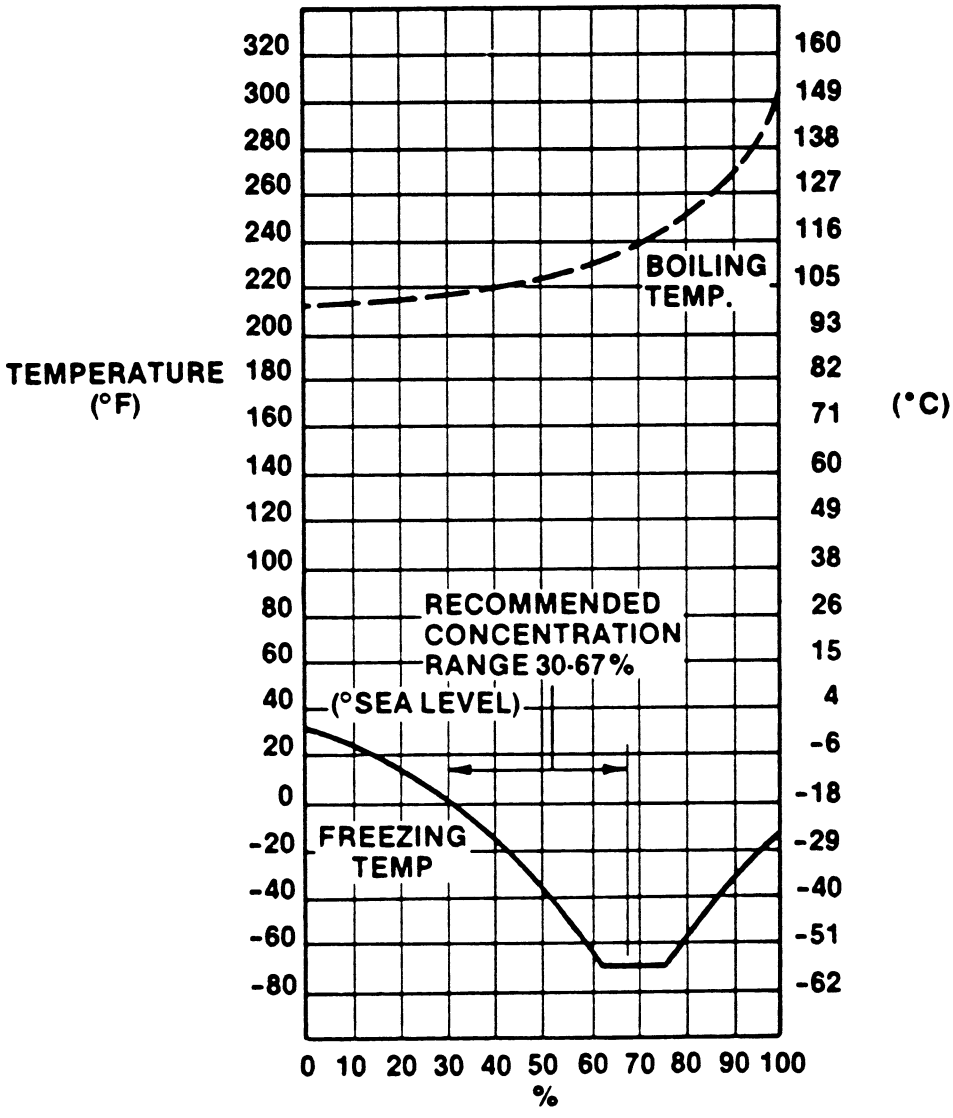

COOLANT FREEZING AND BOILING TEMPERATURES
VS. ETHYLENE GLYCOL CONCENTRATION

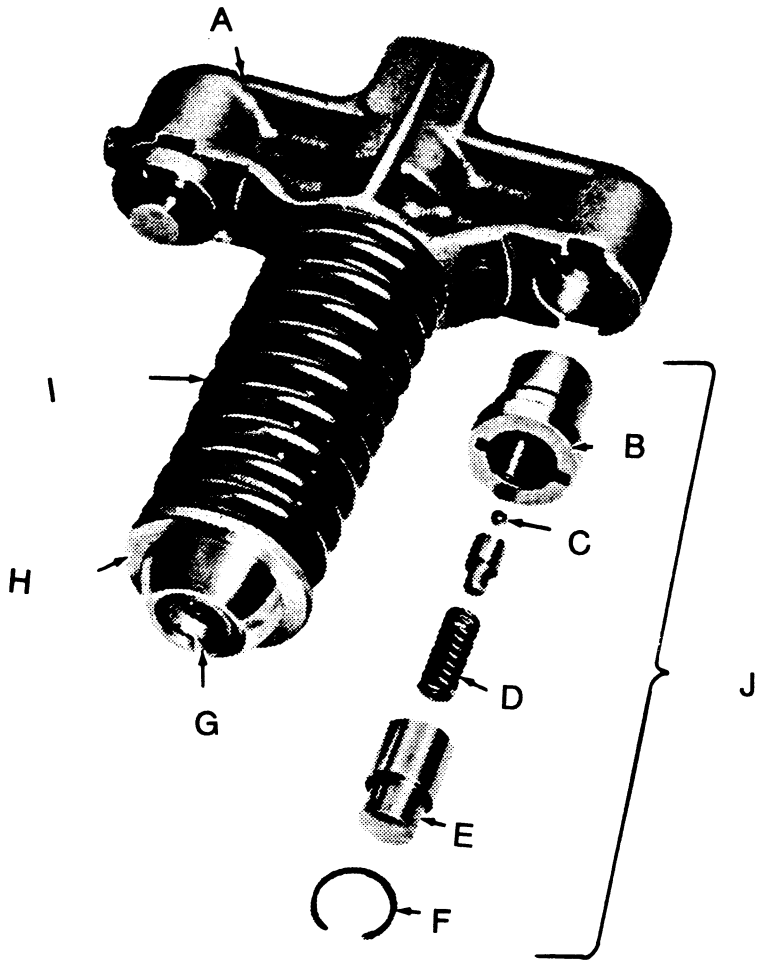
A
I
B
C
H
D
J
G
E
F

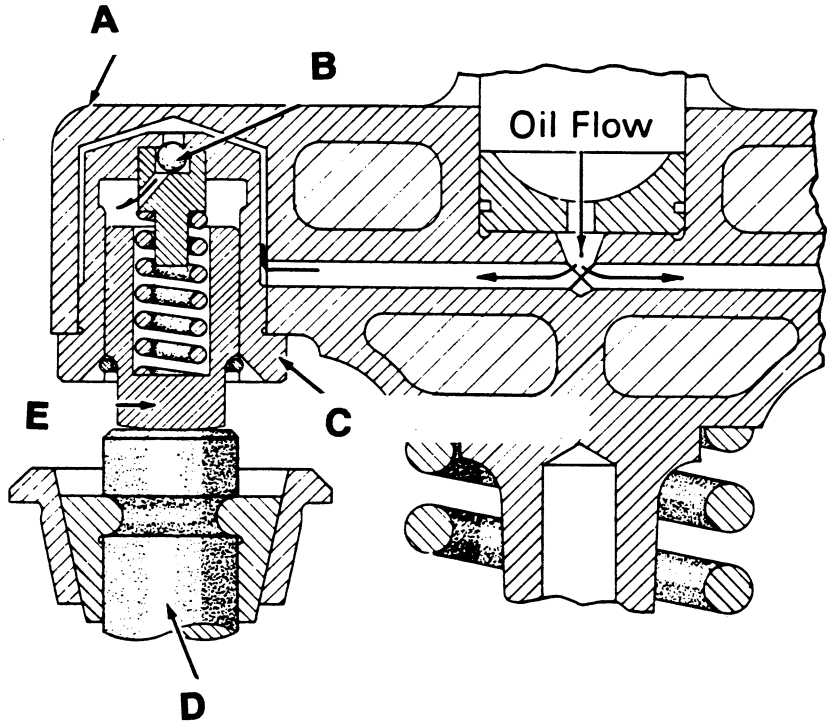
A
B
Oil Flow
E
C
D

MO-0020

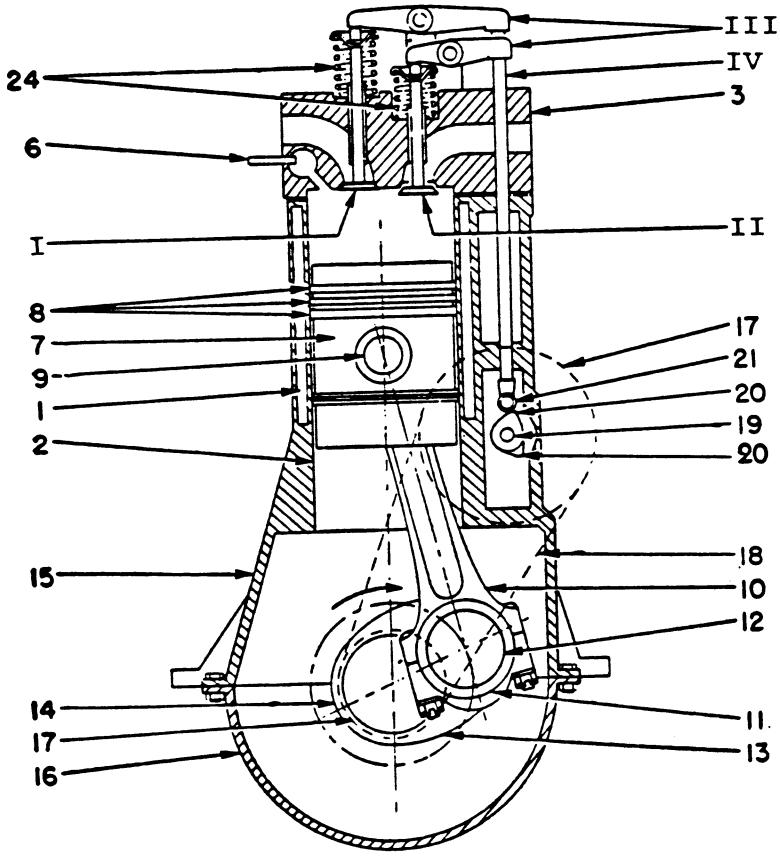

MO-0021

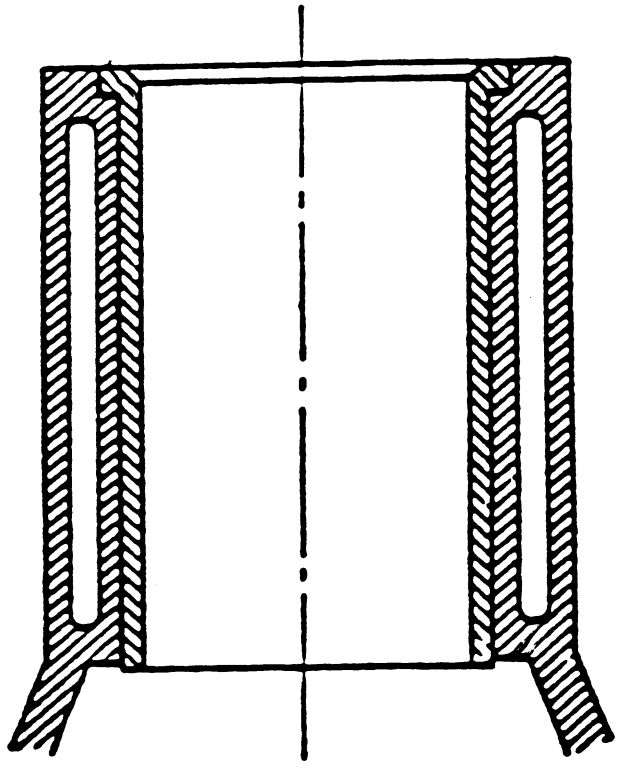

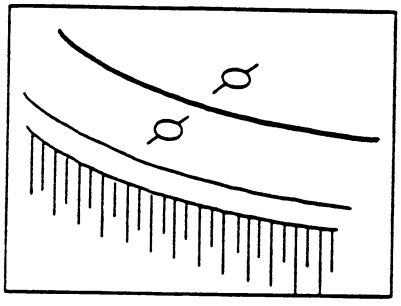

A

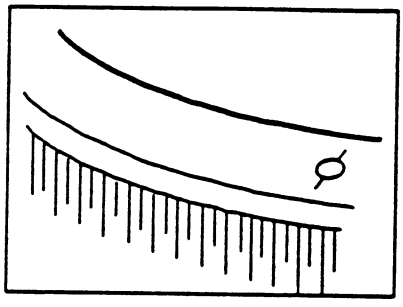

B

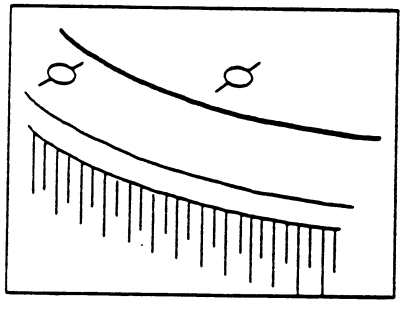

C

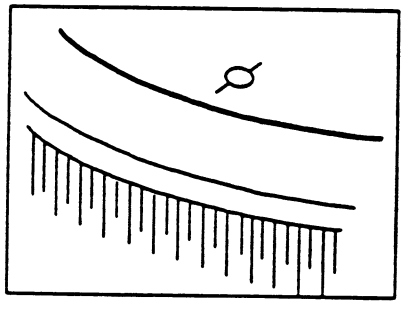

D

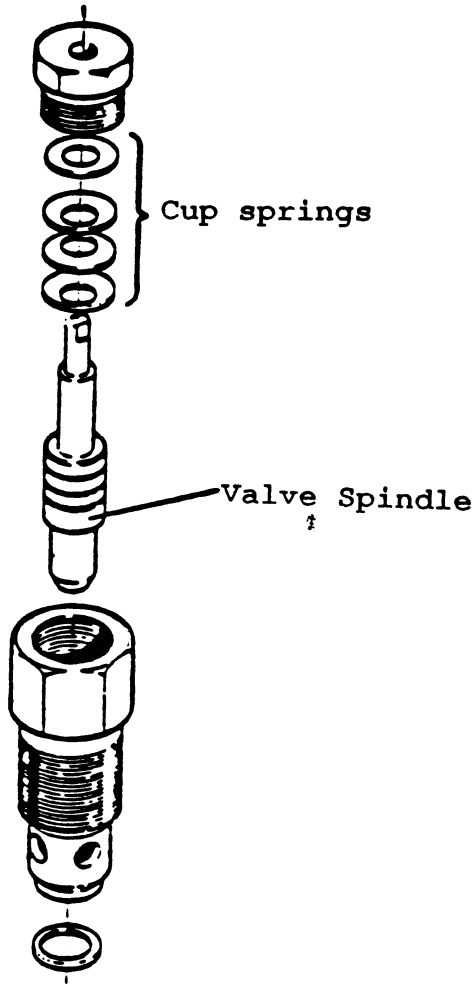
Cup springs
Valve Spindle

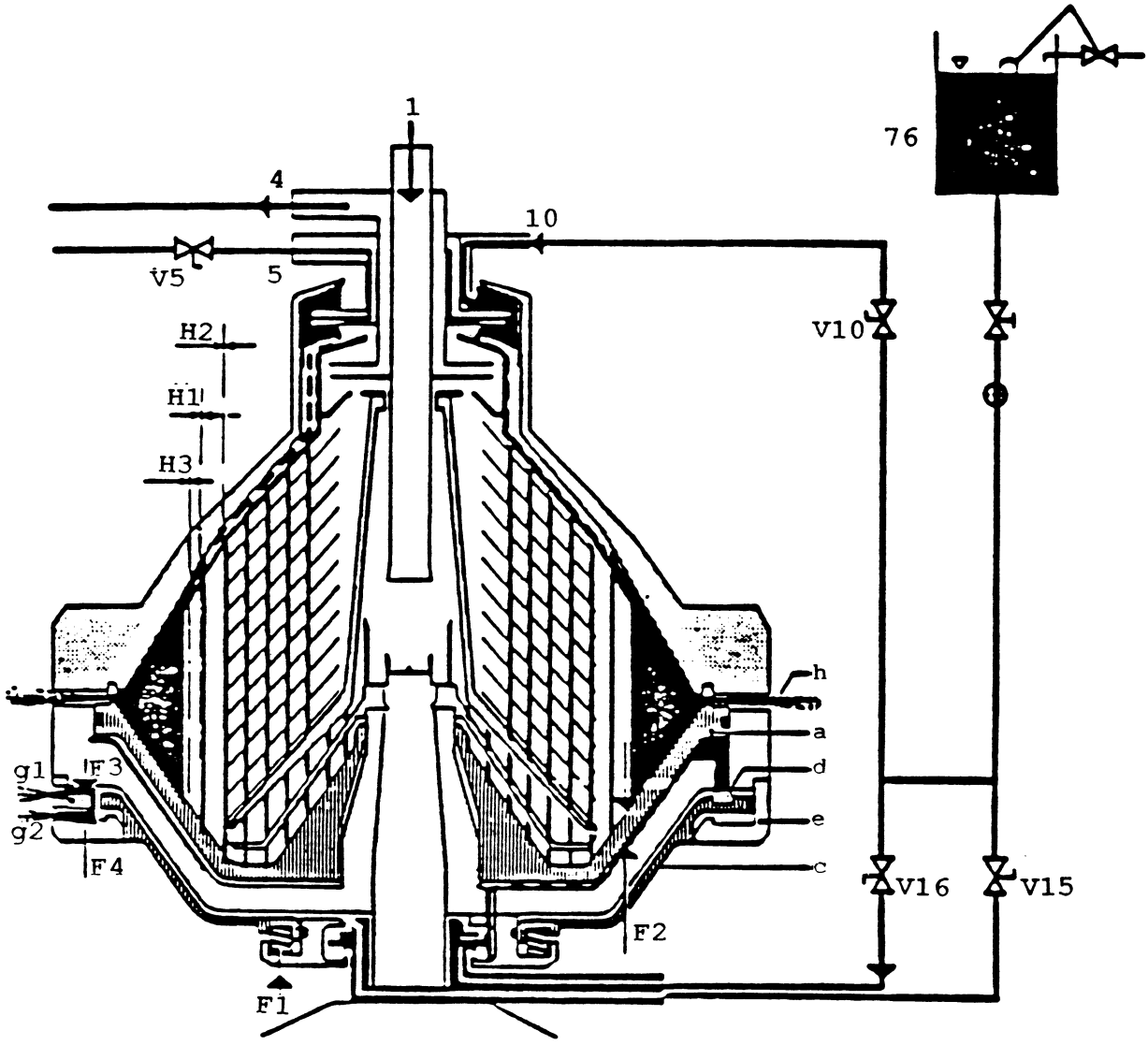

(COURTESY OF ALFA-LAVAL [MARINE AND POWER DIVISION])

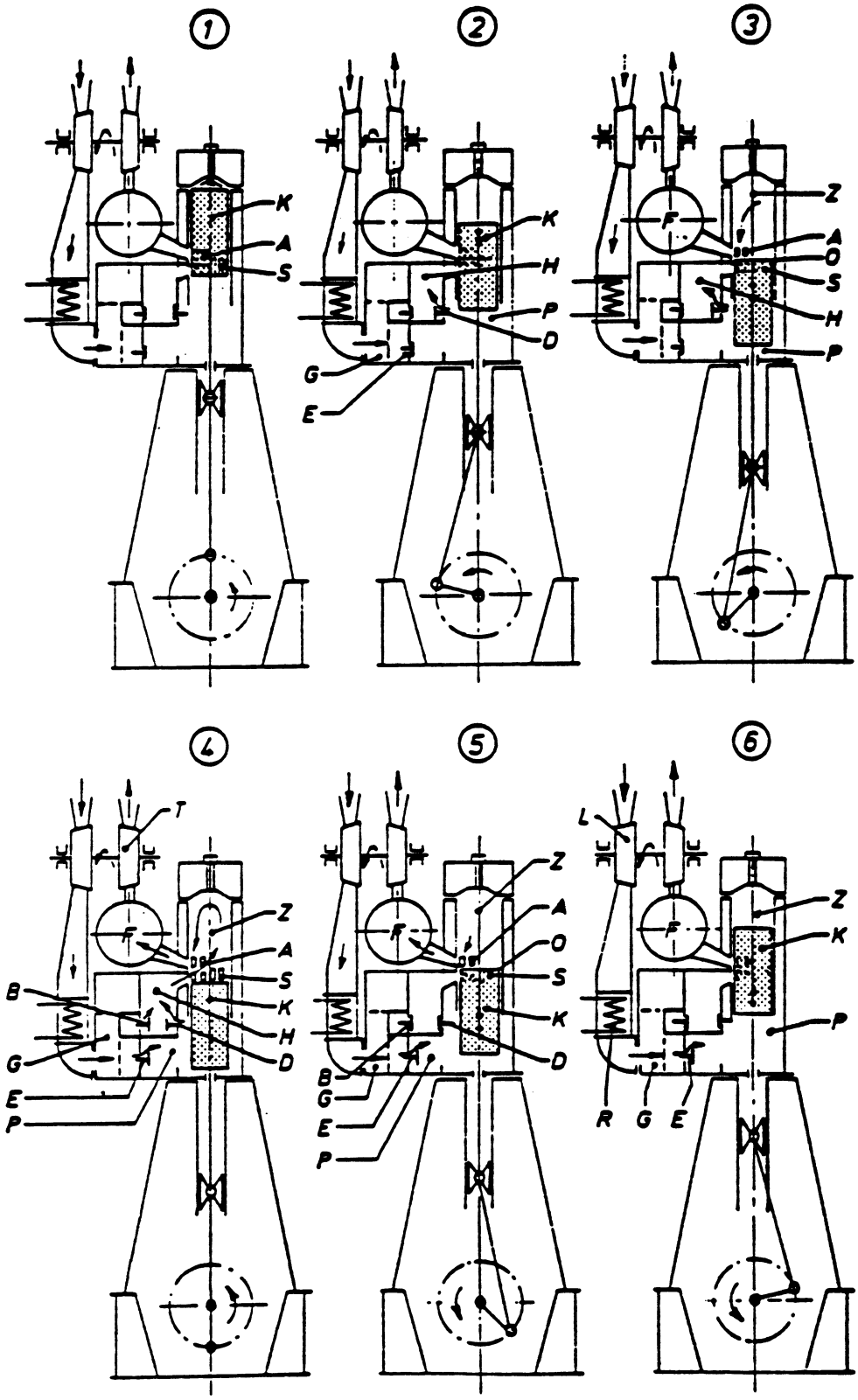

(Courtesy of New Sulzer Diesel)

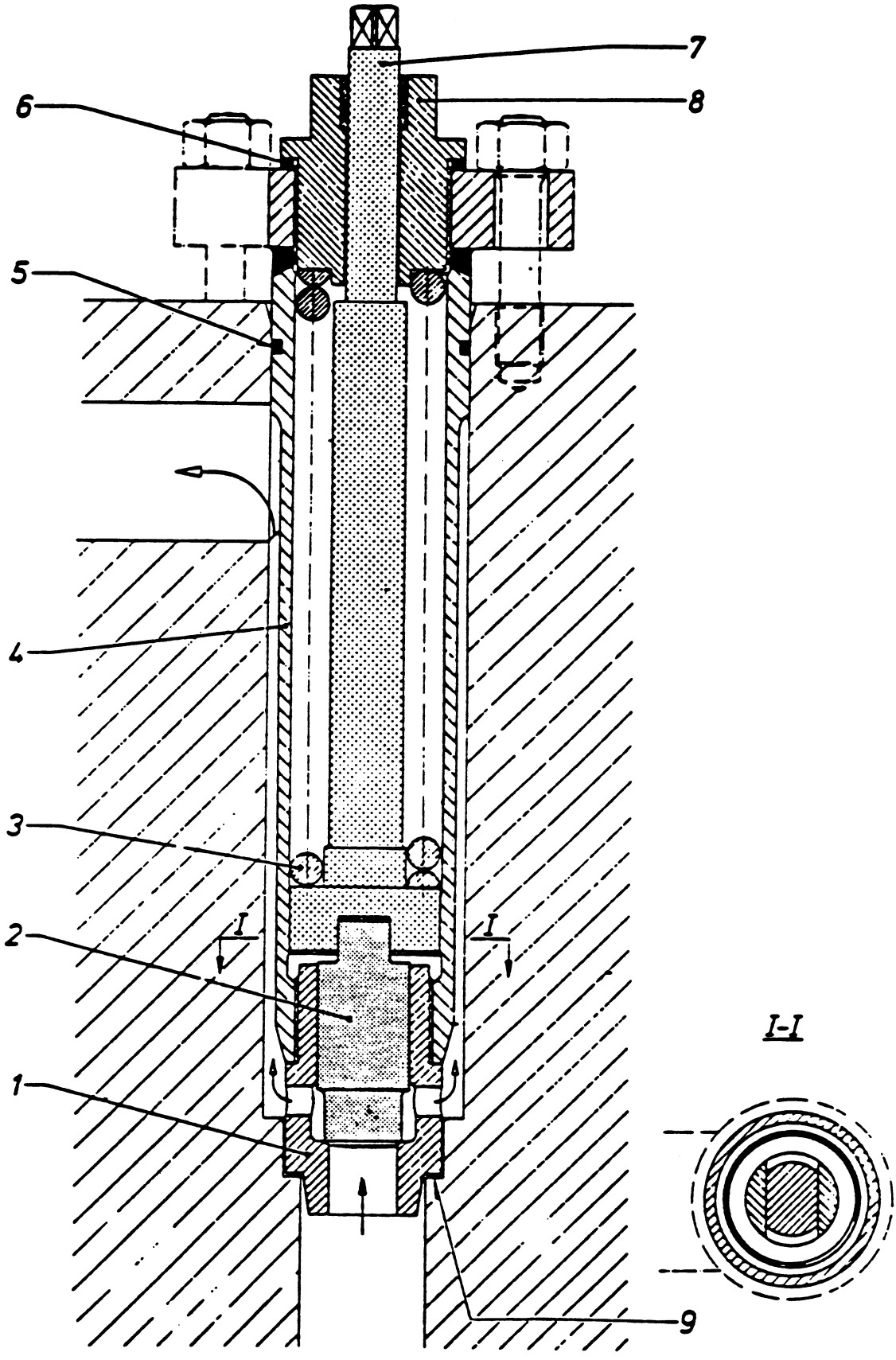
7
8
6
5
4
3
2
1
9
I
I
I-I

MO-0027

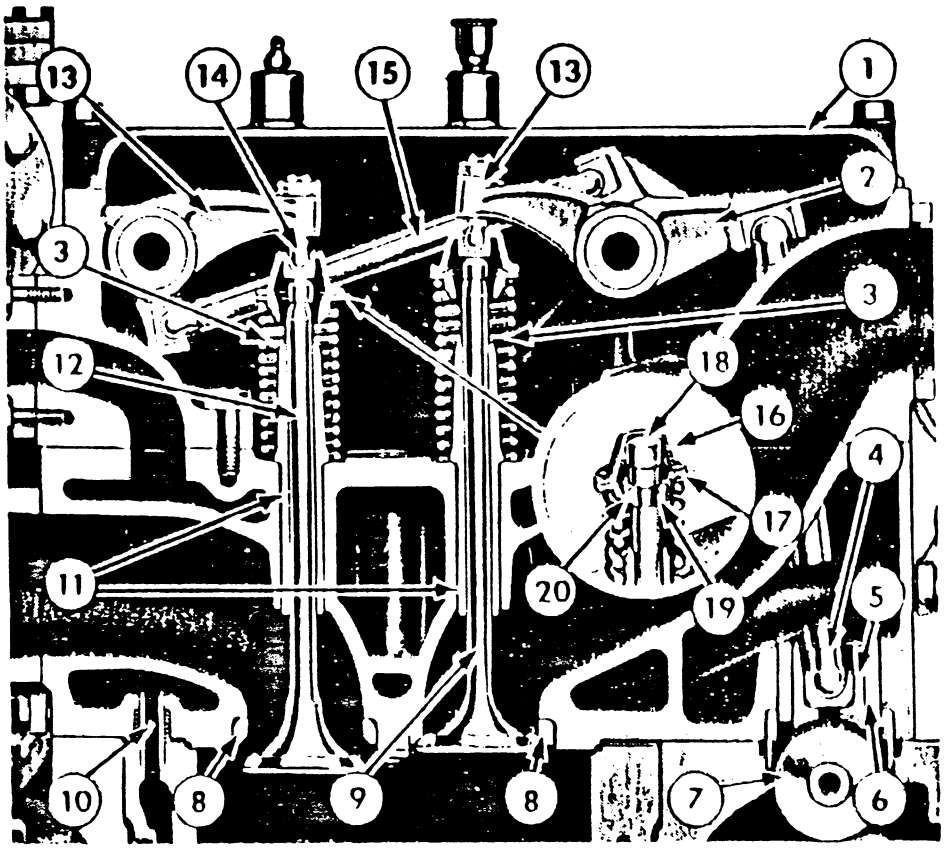

MO-0028

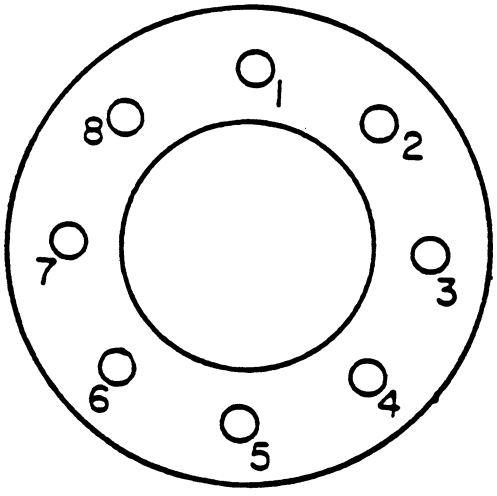

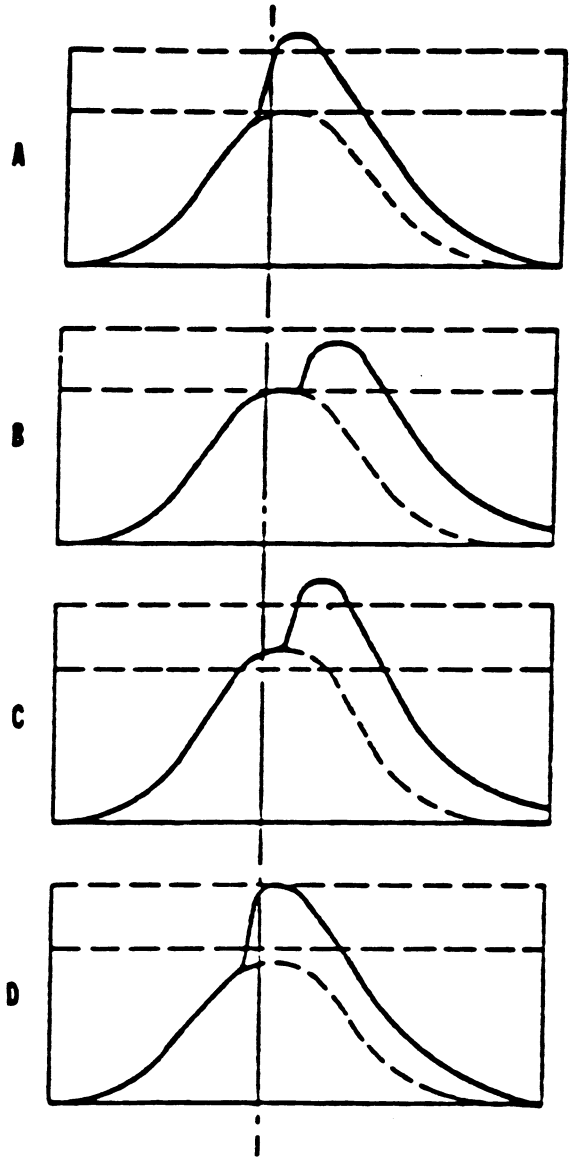
A
B
C
D

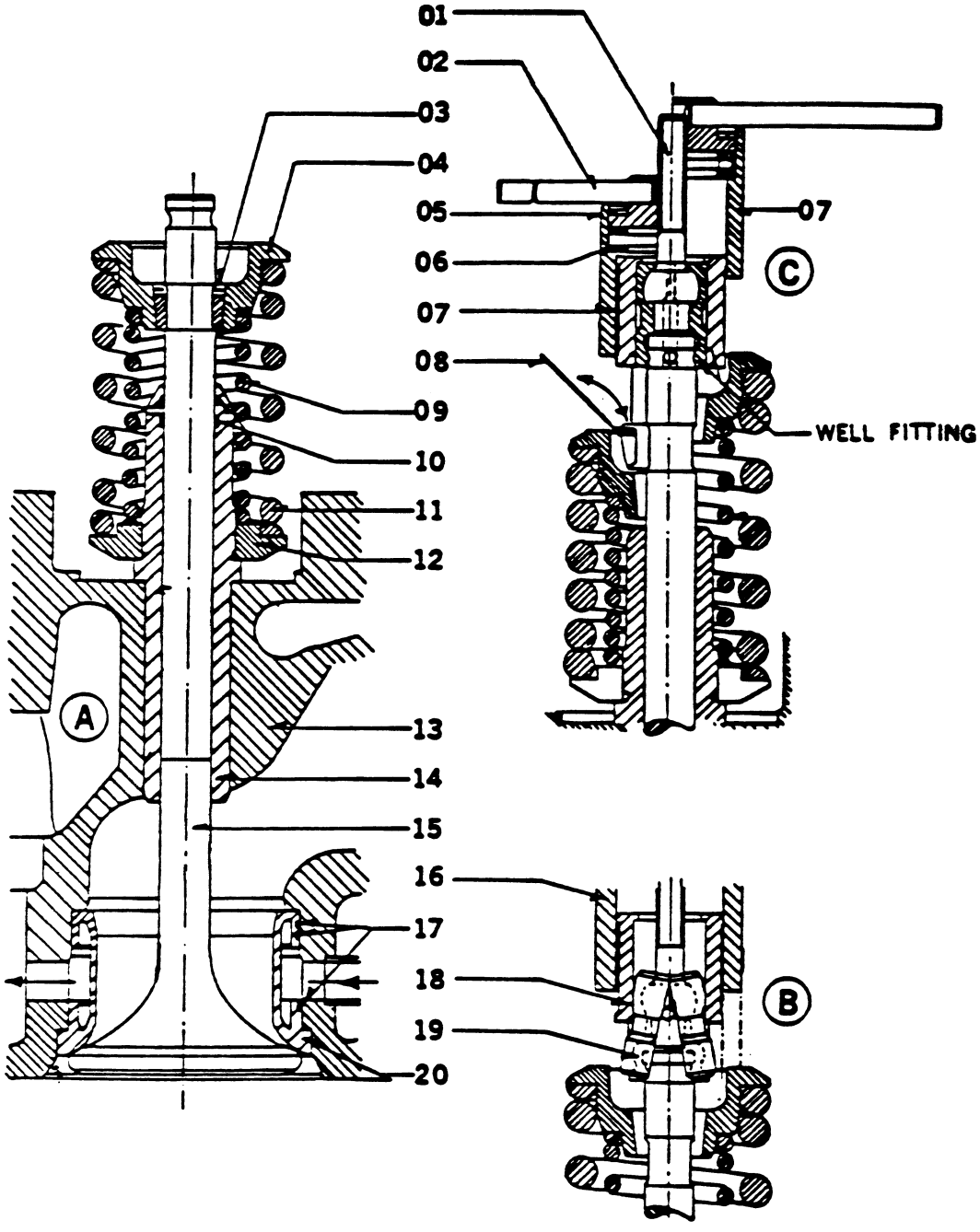
01
02
03
04
05
06
07
08
09
10
11
12
13
14
15
16
17
18
19
20
07
WELL FITTING
A
B
C

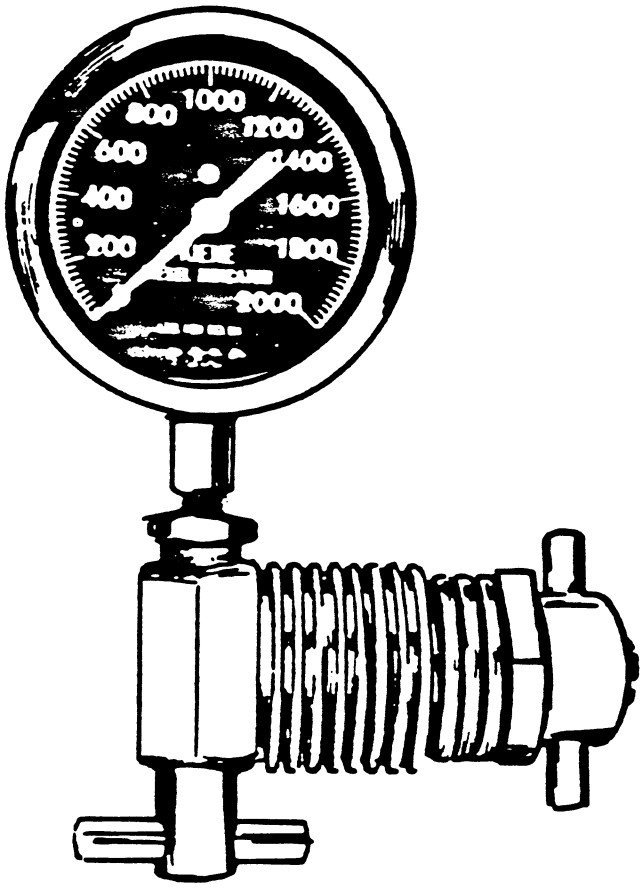
1000
800
1200
600
1400
400
1600
200
1800
2000

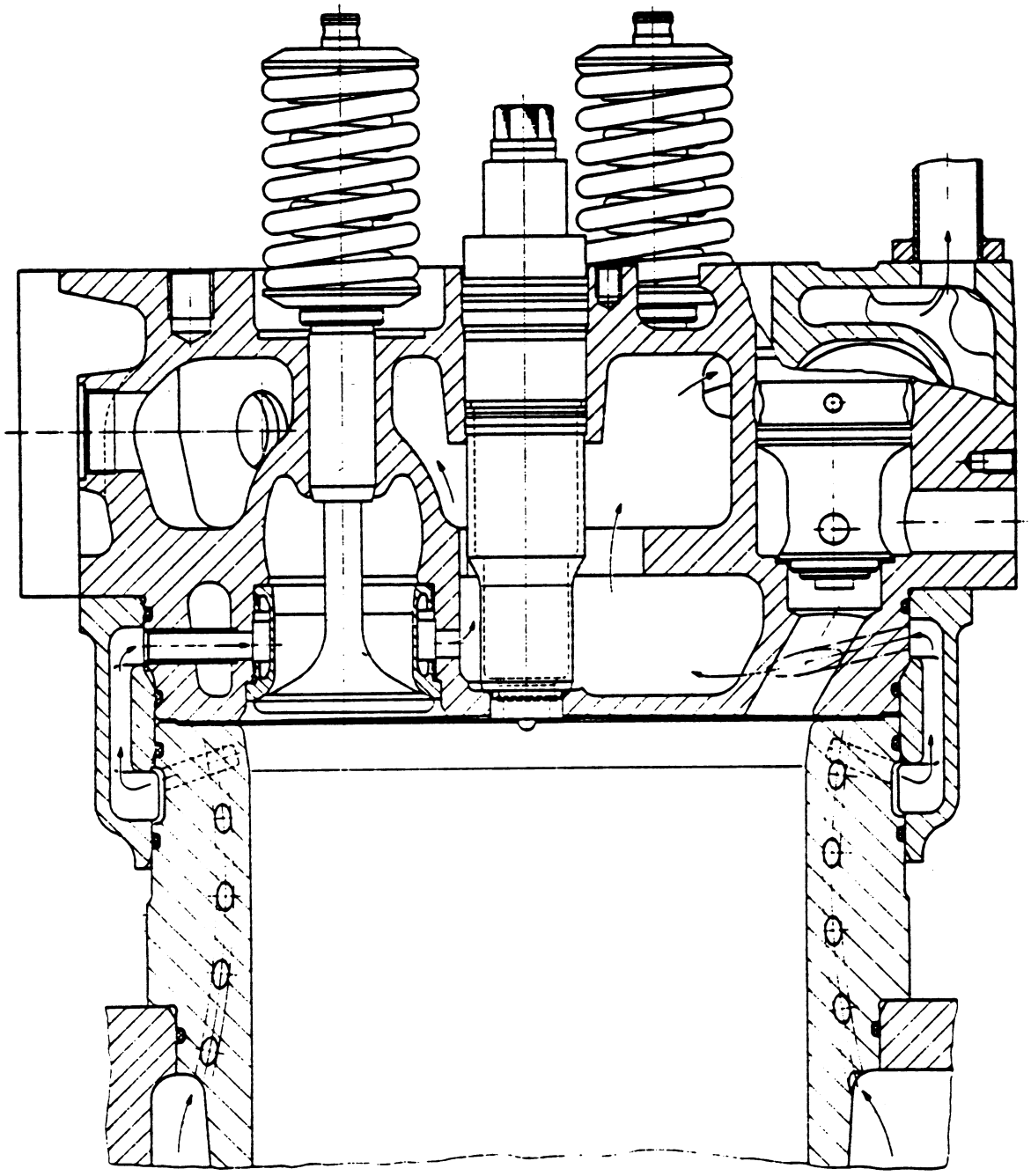

MO-0033

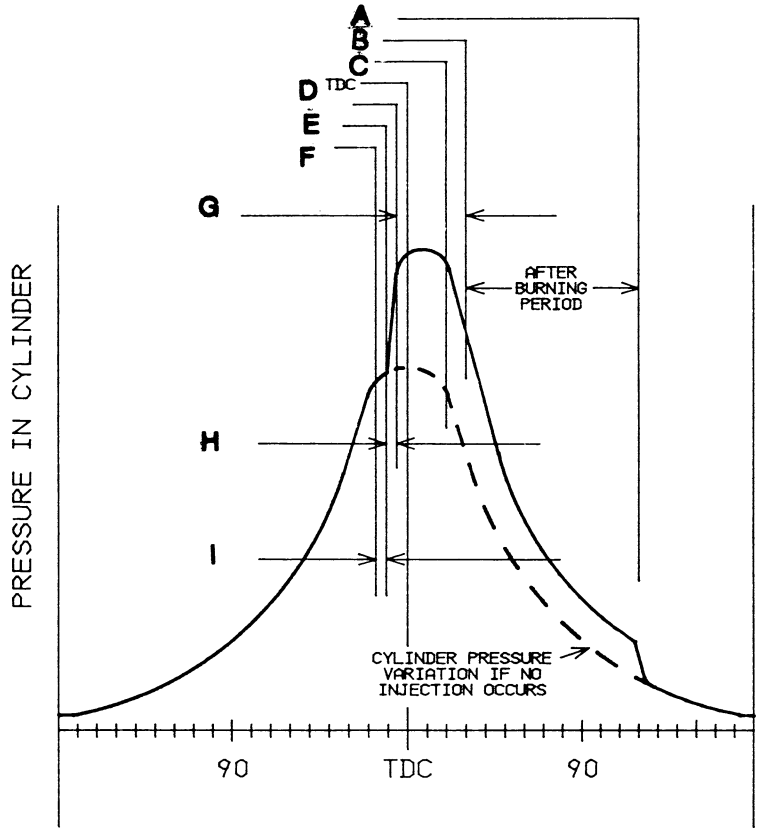
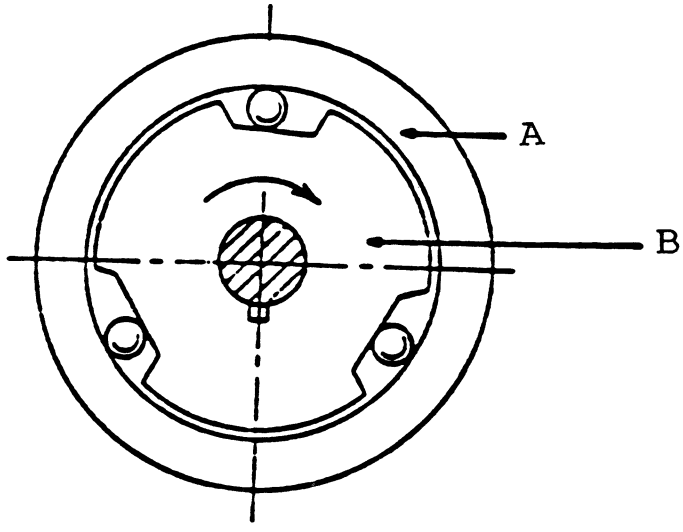
MO-0034