MO-0001

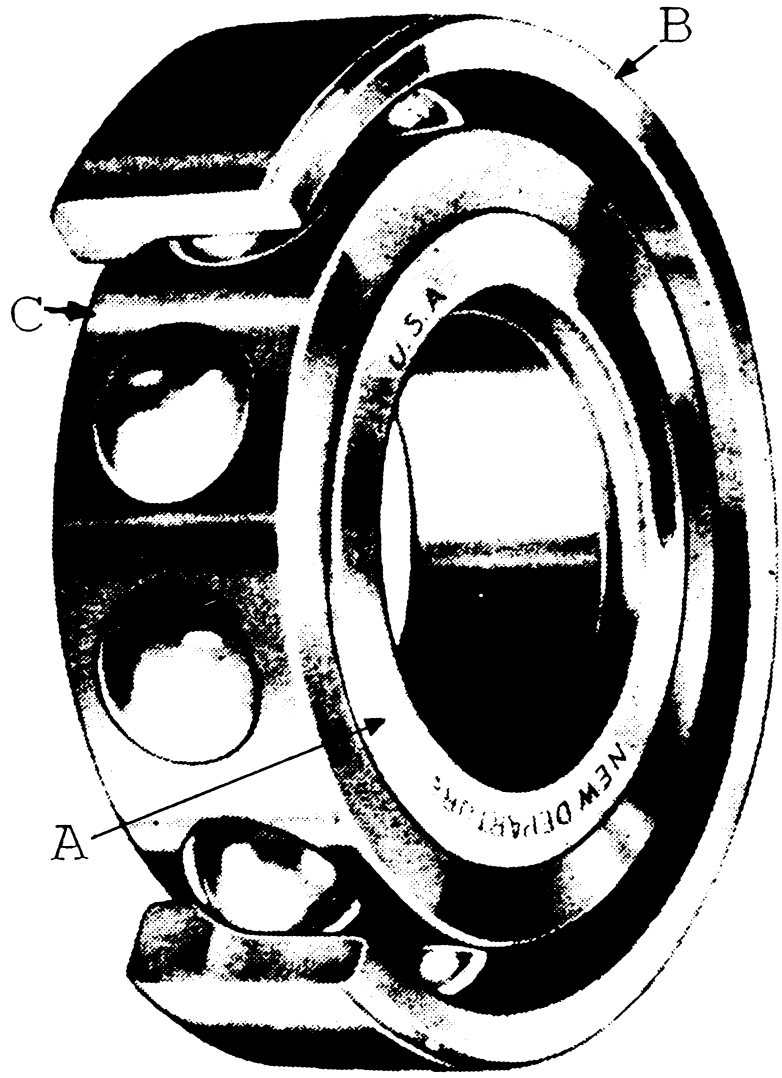

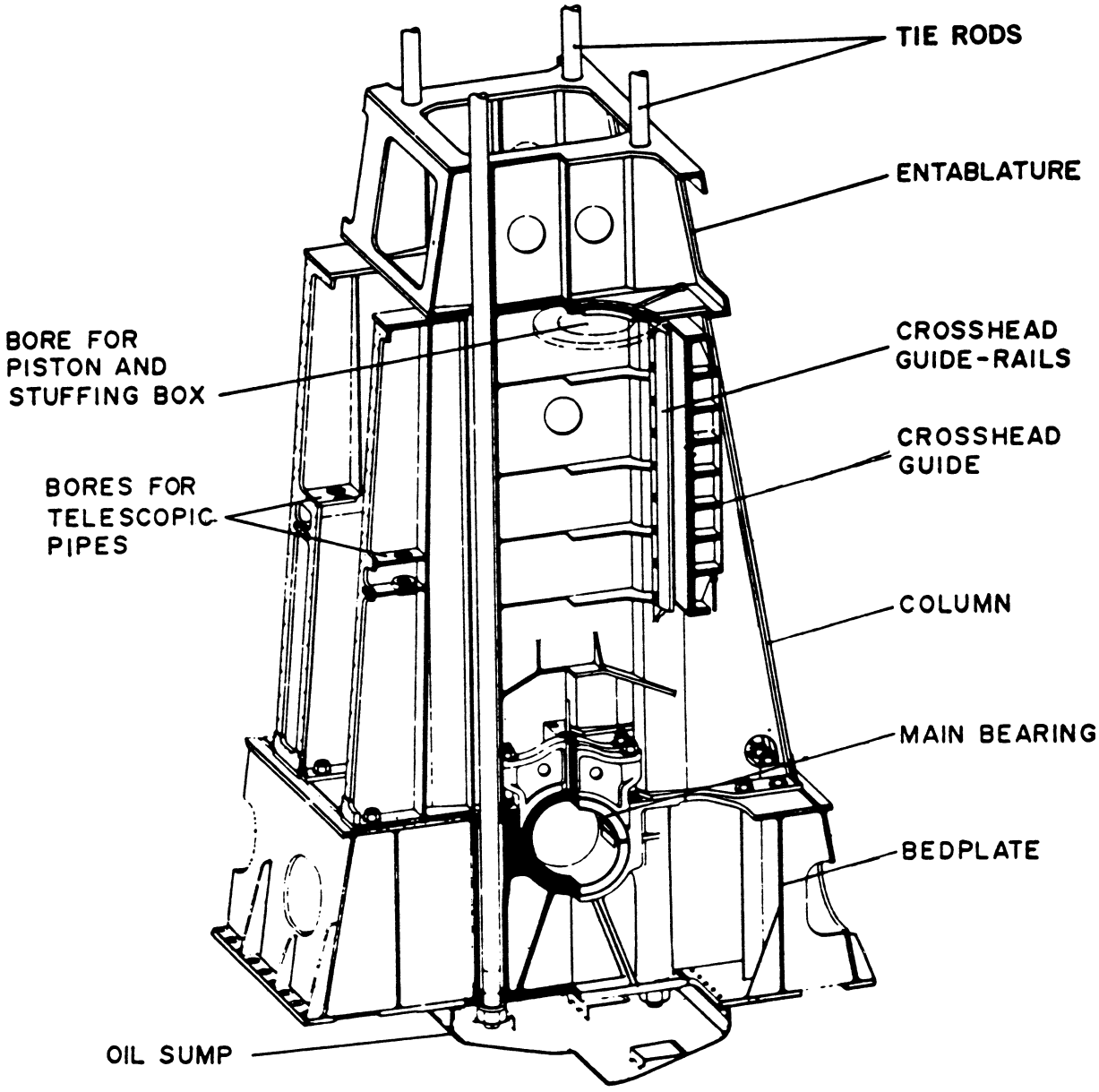
TIE RODS
ENTABLATURE
BORE FOR PISTON AND STUFFING BOX
CROSSHEAD GUIDE-RAILS
CROSSHEAD GUIDE
BORES FOR TELESCOPIC PIPES
COLUMN
MAIN BEARING
BEDPLATE
OIL SUMP

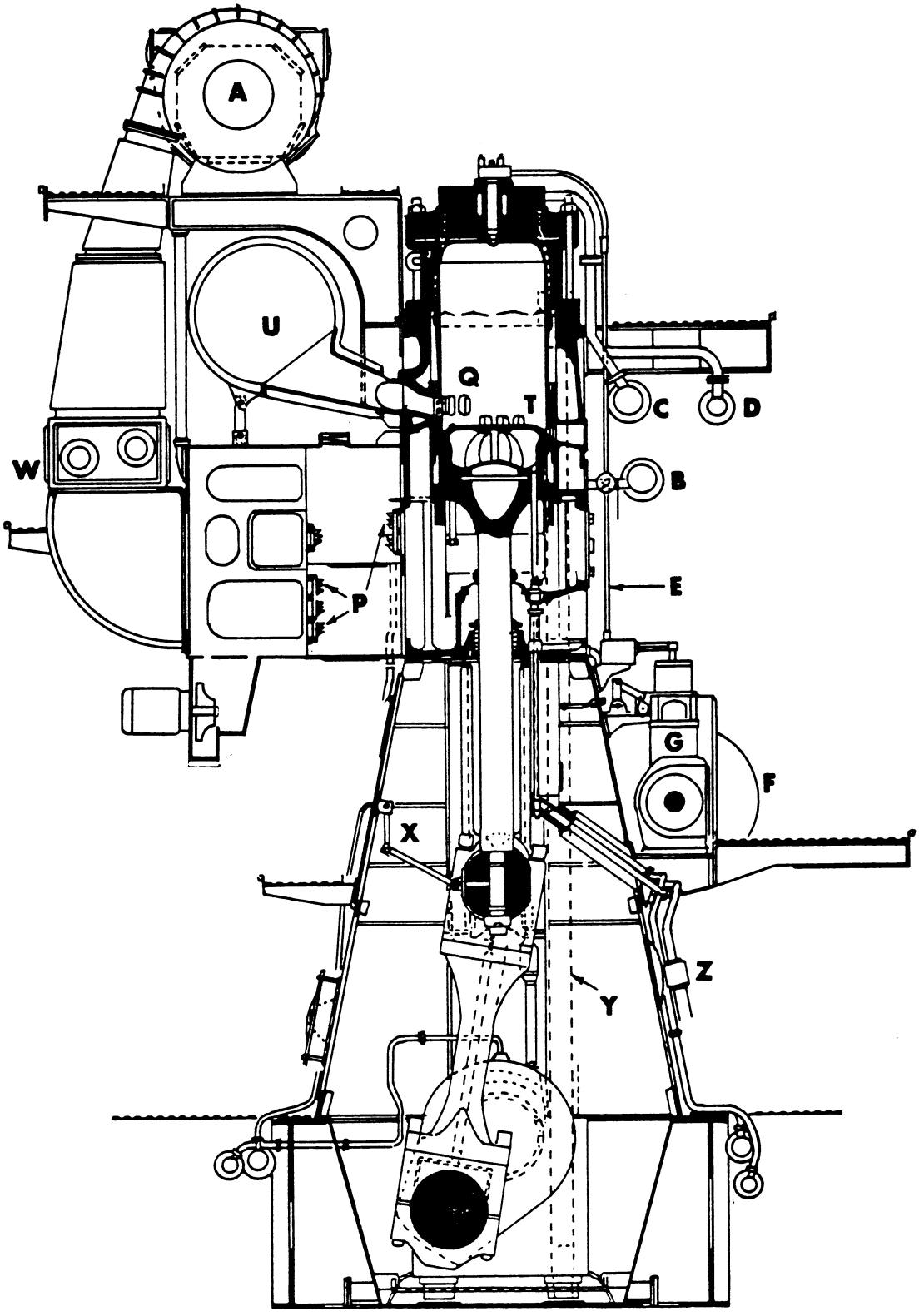
A
U
Q
T
C
D
W
B
E
P
G
F
X
Z
Y

DIESEL – NON REVERSIBLE MARINE ENGINE

MODEL DMRV–16–4 ENGINE SERIAL NUMBER 72001 to 72010 Inclusive

B.M.E.P. 182 PSI

NO. CYCLES 4 NO. CYLINDERS 16

BORE 17" STROKE 21"

H.P. 7000 AT 400 R.P.M.

TOTAL DISPLACEMENT 76,266 CUBIC INCHES

*FUEL INJECTION TIMING 22° Left Bank, 20° Right Bank BEFORE TOP CENTER

SET 1 inch Left Bank, 7/8 inch Right Bank BEFORE TOP CENTER ON 51 IN. DIAMETER FLYWHEEL

FIRING ORDER 1L–8R–4L–5R–7L–2R–3L–6R–8L–1R–5L–4R–2L–7R–6L–3R

FUEL INJECTION PUMP RACK AT FULL LOAD 31.5MM No. 2 Diesel Fuel Oil, 30.0 MM 3500 SSU Heavy Fuel

STARTING SYSTEM Pilot Air – Gear Driven Distributor

CRANKSHAFT ROTATION Clockwise (VIEWED FROM FLYWHEEL END)

*AVERAGE FULL LOAD SHOP DATA

***	EXHAUST TEMPERATURE	870°F
	AIR MANIFOLD PRESSURE	31 in.-hg
	AIR MANIFOLD TEMPERATURE	110°F
	AMBIENT TEMPERATURE	72°F
	BAROMETRIC PRESSURE	30.11 in.-hg
**	FULL LOAD FIRING PRESSURE	1225 PSI No. 2 Diesel Fuel 1200 PSI 3500 SSU Heavy Fuel

VALVE CLEARANCE WITH COLD ENGINE

INTAKE .040" EXHAUST .040"

*Values based on No. 2 Diesel Fuel Oil
**ABS Allowable Firing Pressure 1400 PSI
Maximum allowable Differential Firing Pressure ±50 PSI from mean.
***Maximum allowable Exhaust Gas Temperature 950°F.

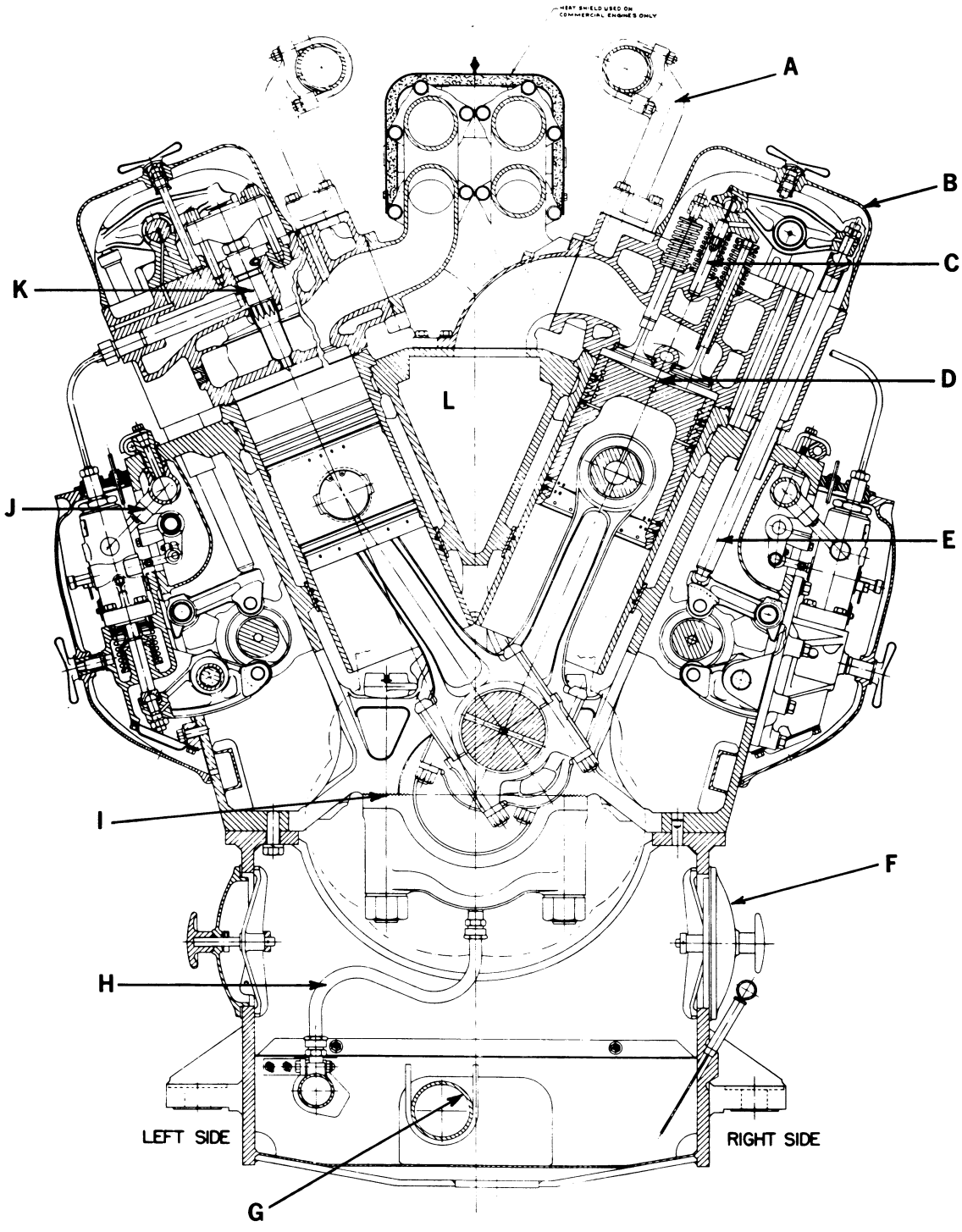
HEAT SHIELD USED ON COMMERCIAL ENGINES ONLY
A
B
C
D
E
F
G
H
I
J
K
L
LEFT SIDE
RIGHT SIDE

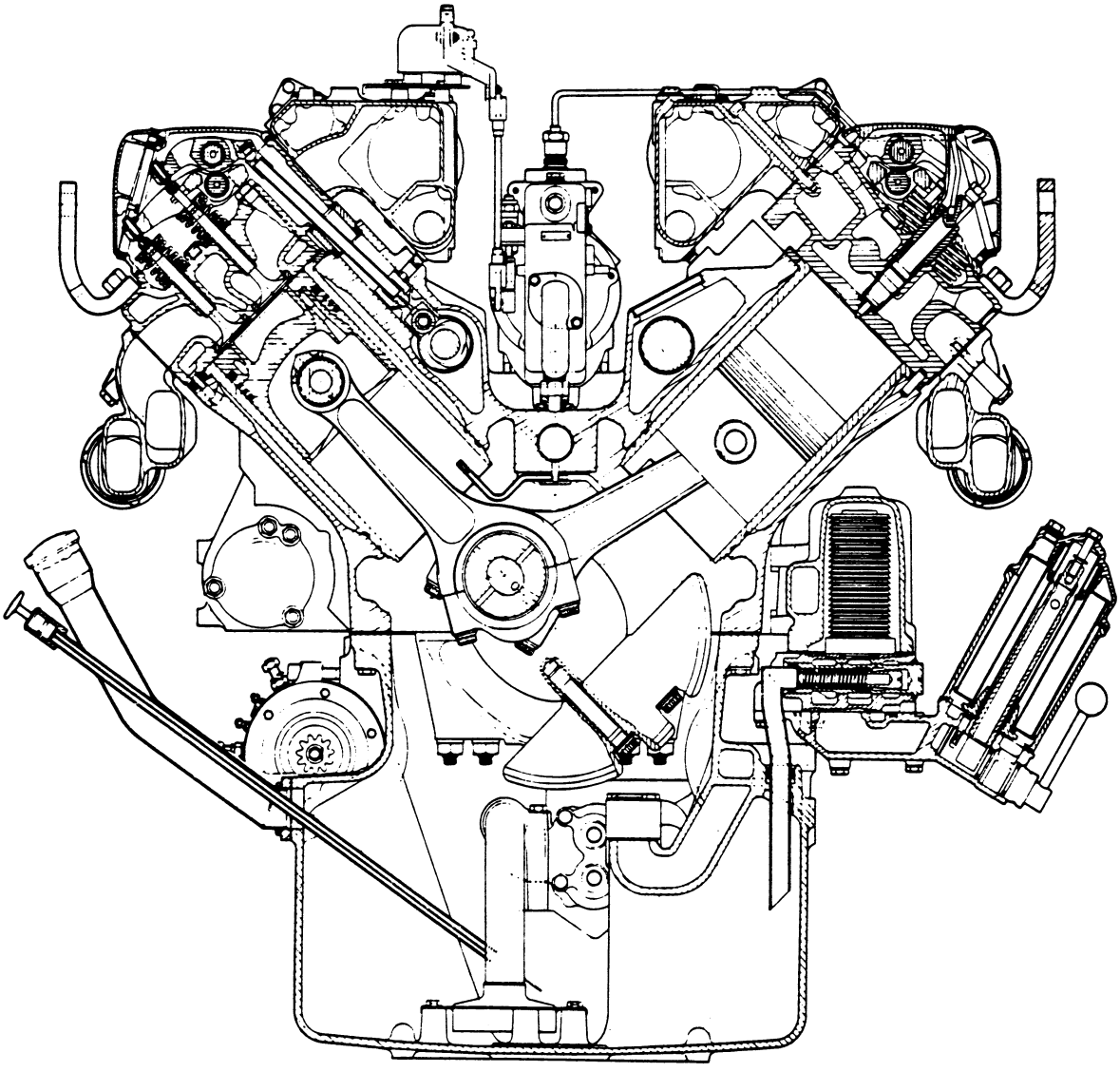

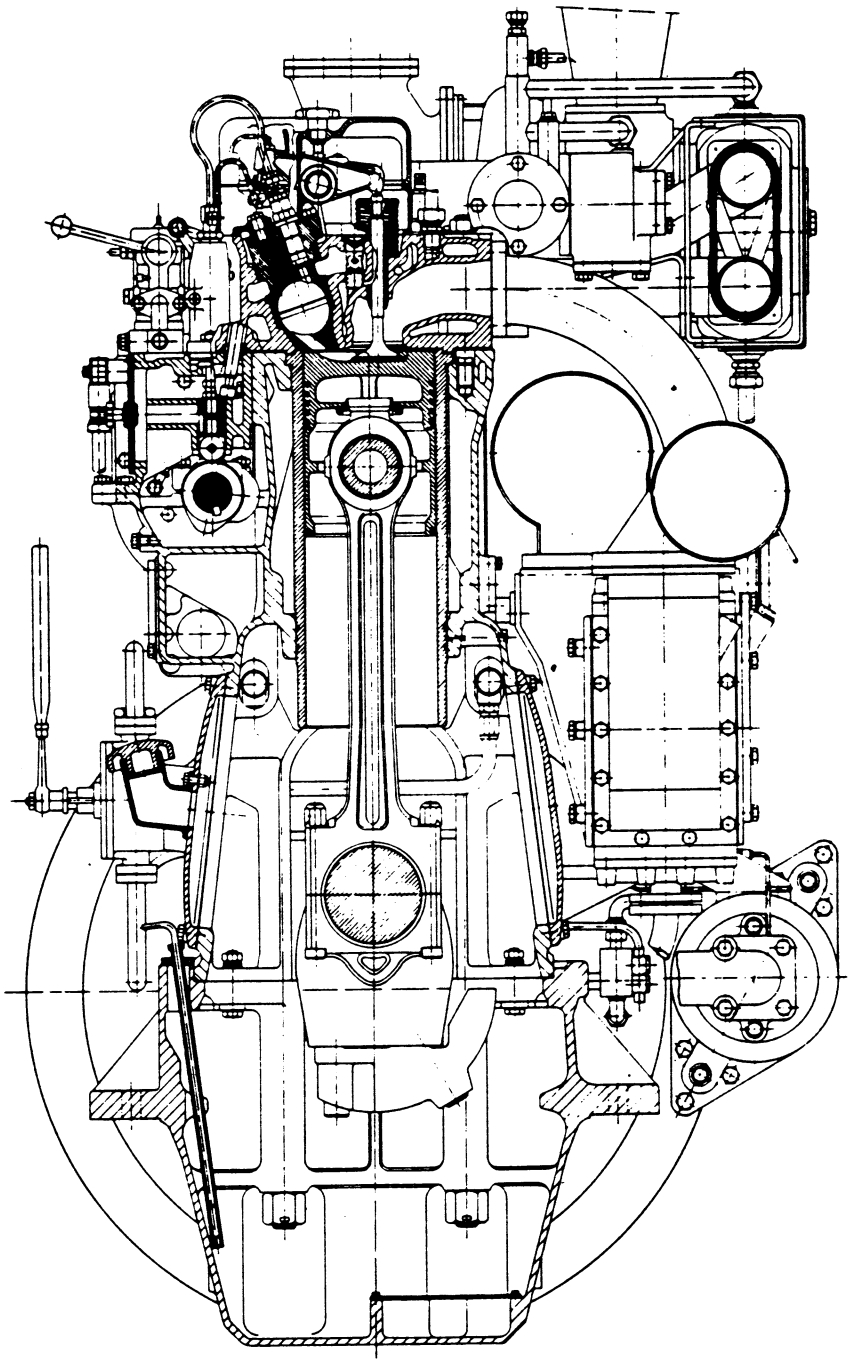

MO-0008

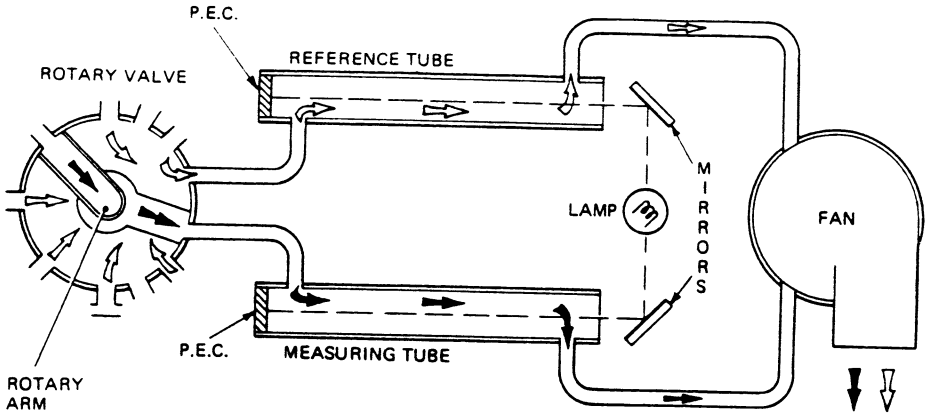

MO-0009

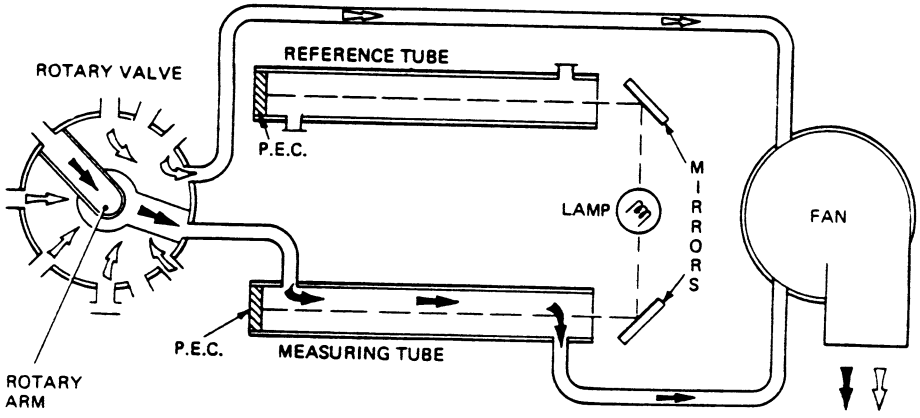

MO-0010

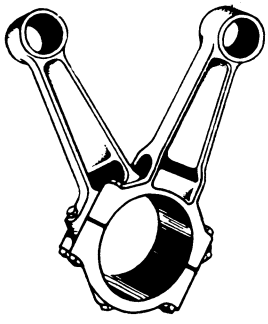

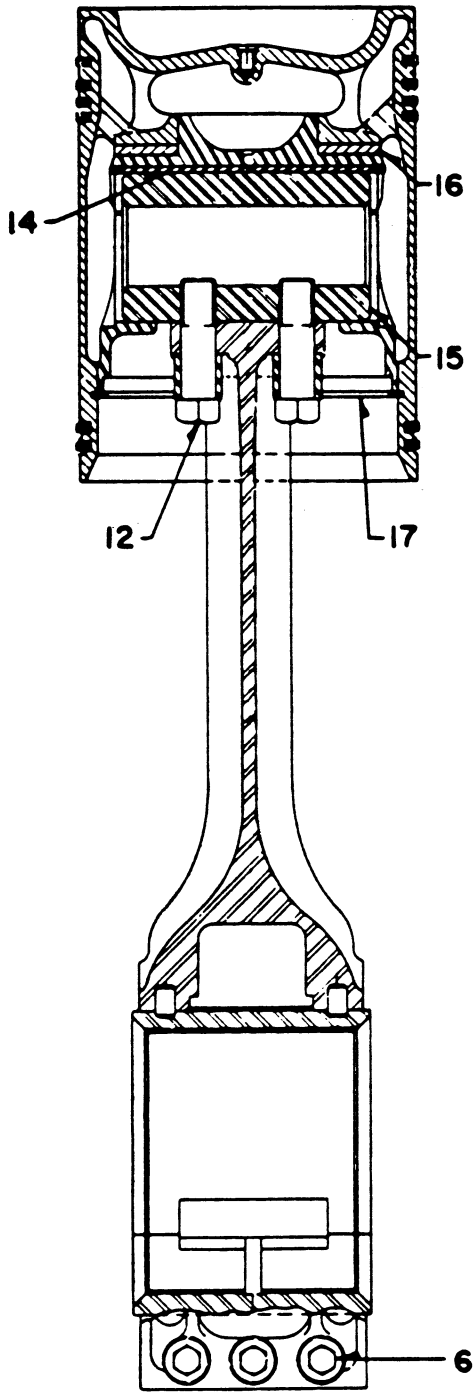

SECTION A-A

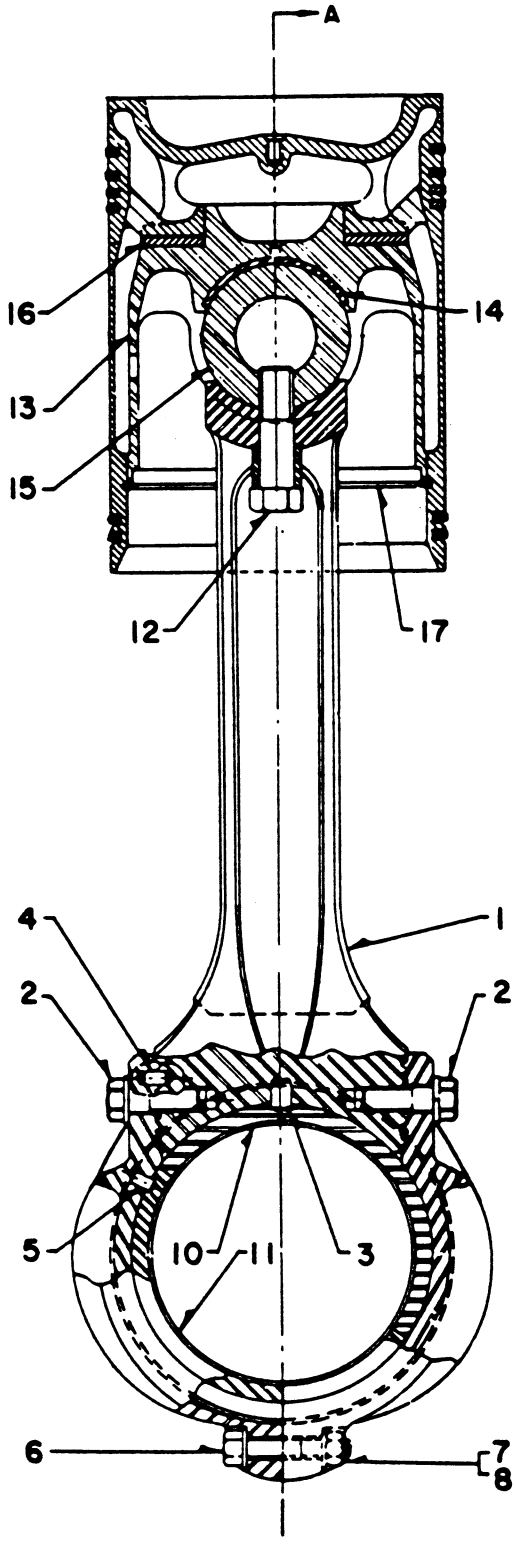

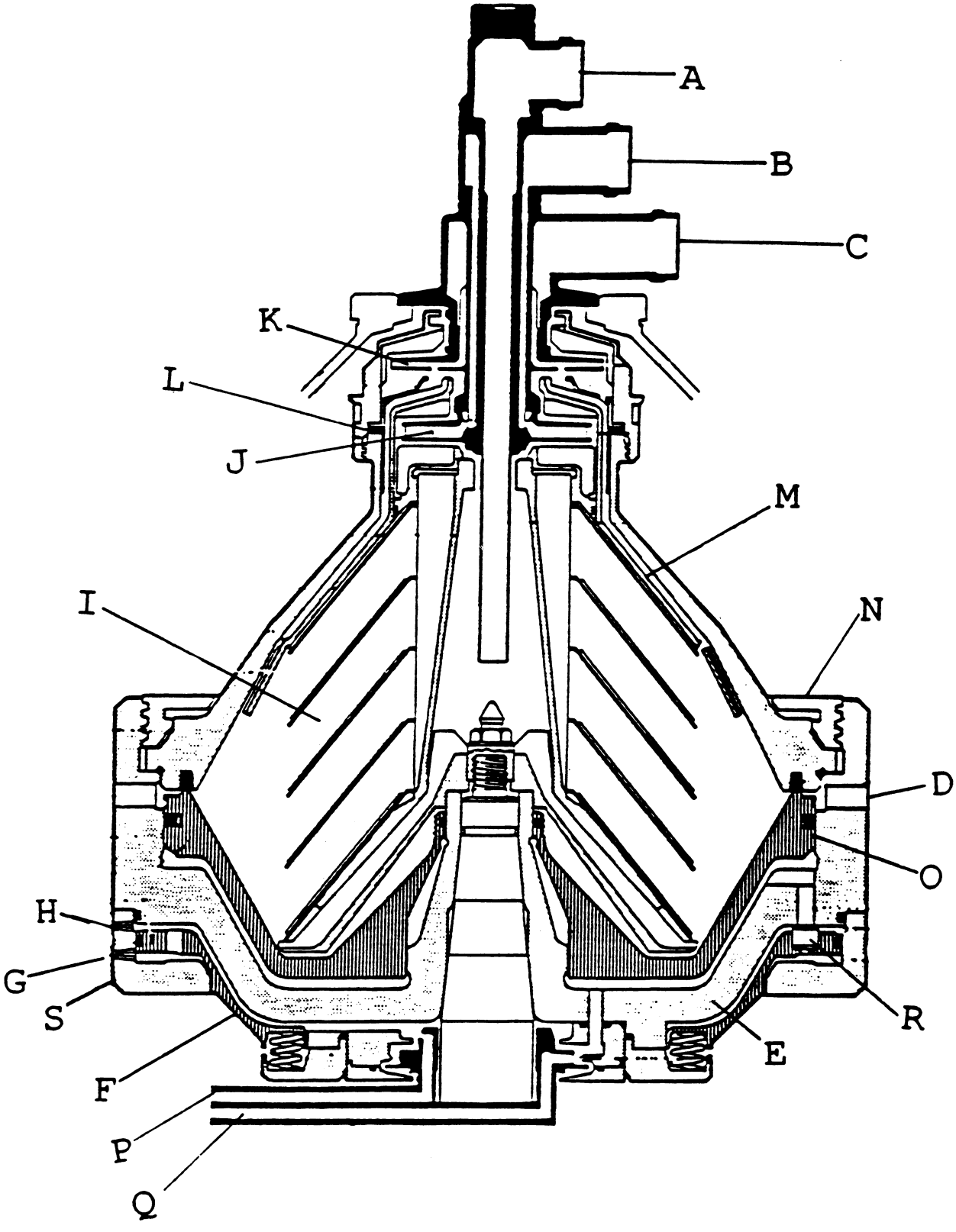
A
B
C
K
L
J
M
I
N
D
O
H
G
S
R
E
F
P
Q

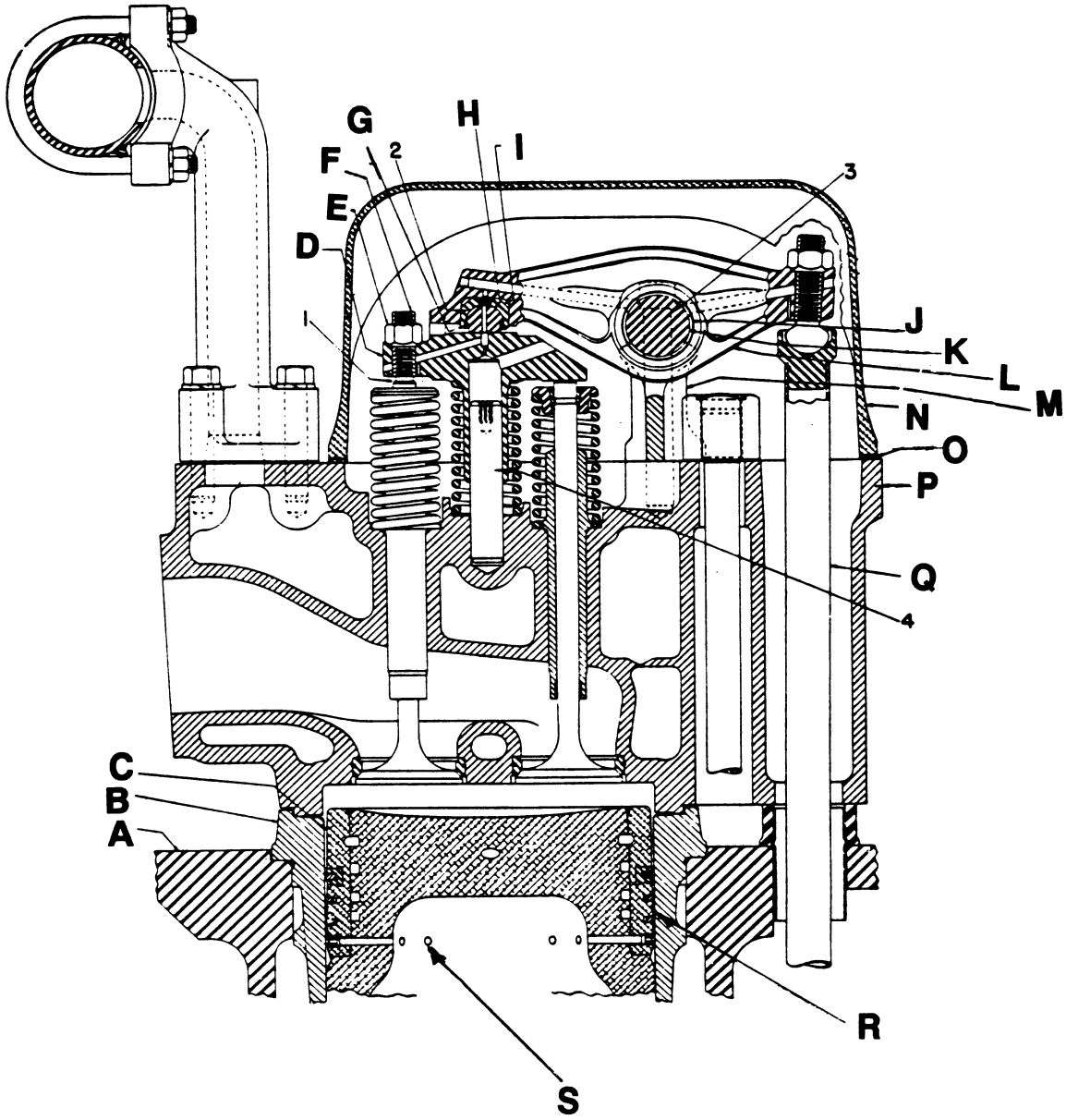
G
H
F
2
I
3
E
D
1
J
K
L
M
N
O
P
Q
4
C
B
A
R
S

MO-0014

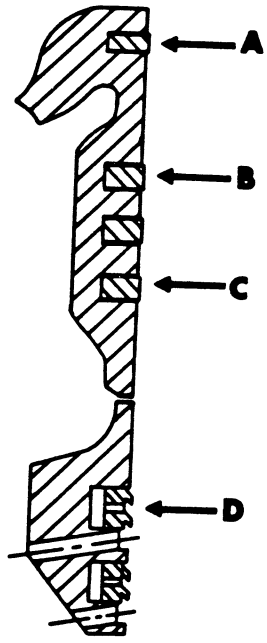

MO-0015

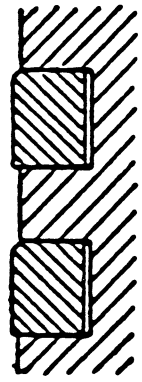

MO-0016

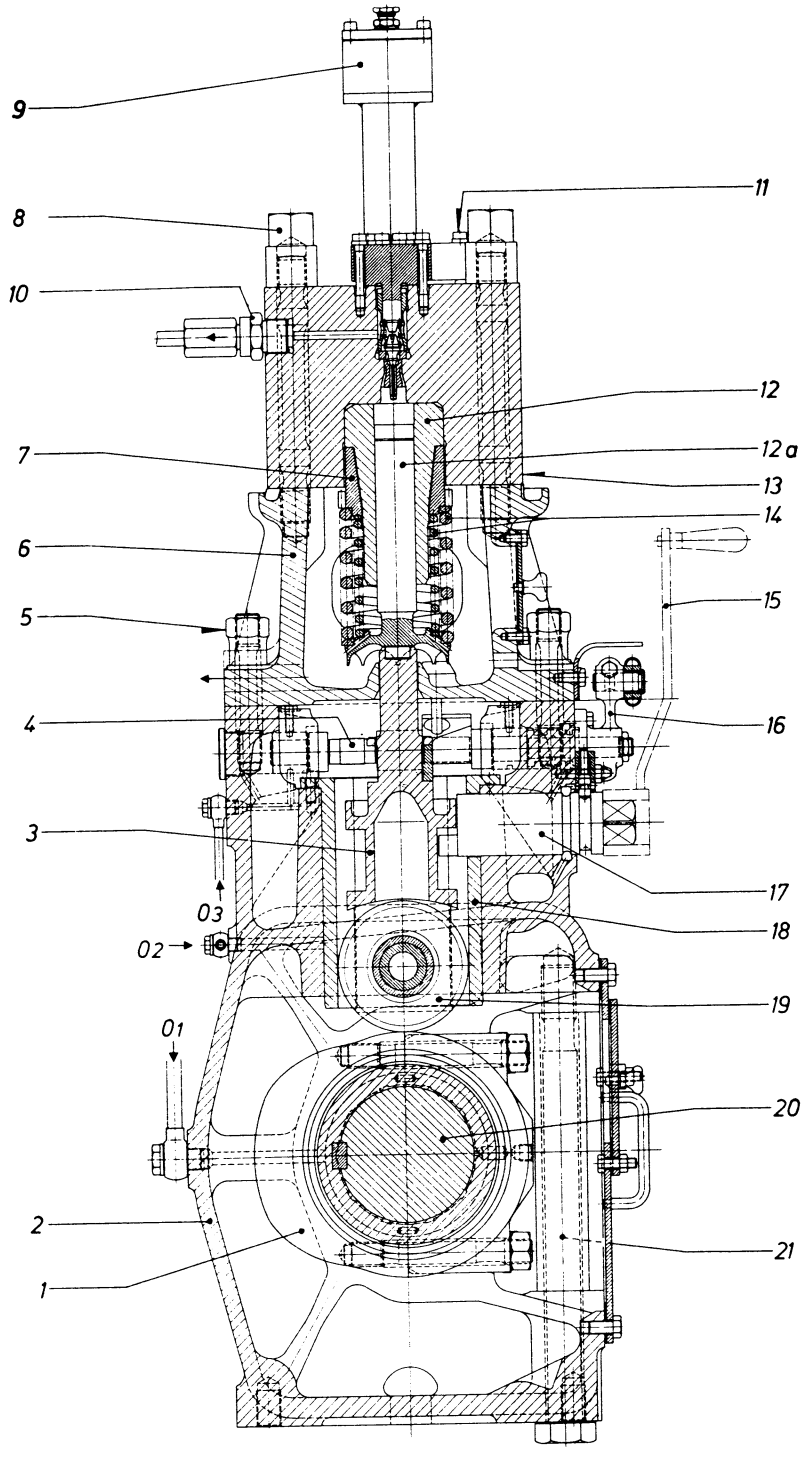

(Courtesy of New Sulzer Diesel)

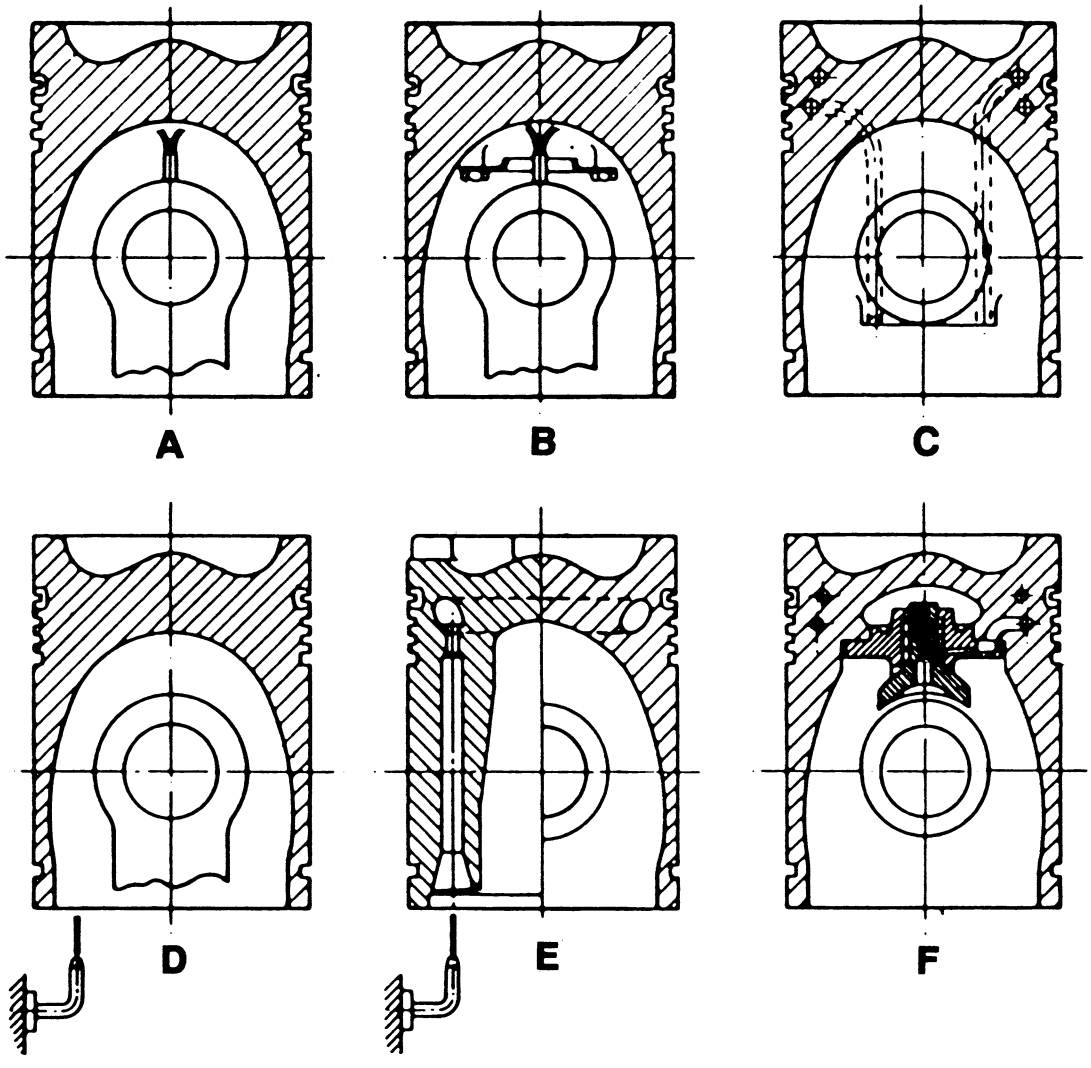
A
B
C
D
E
F