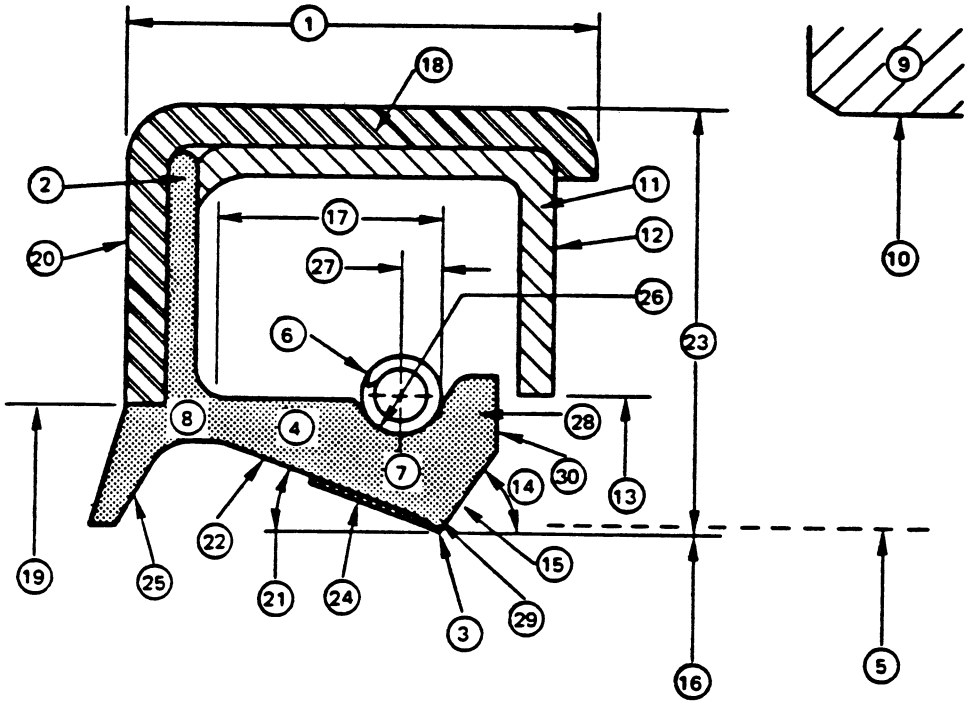
1
18
9
2
11
17
12
20
27
10
26
6
23
8
4
28
7
30
14
13
22
15
19
25
21
24
29
3
16
5

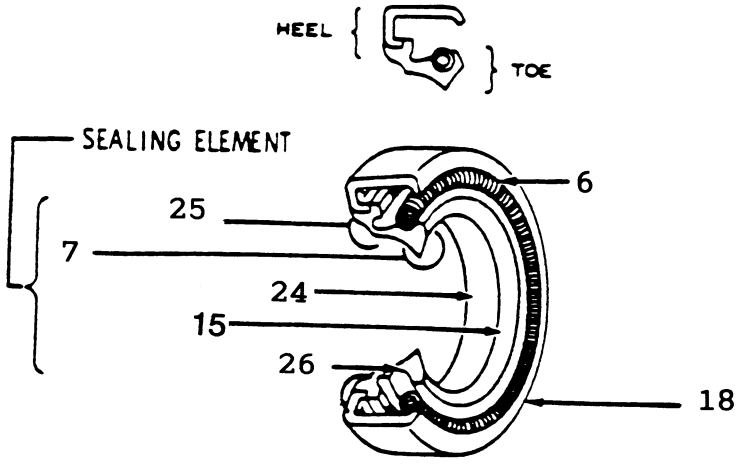
HEEL
TOE
SEALING ELEMENT
6
25
7
24
15
26
18

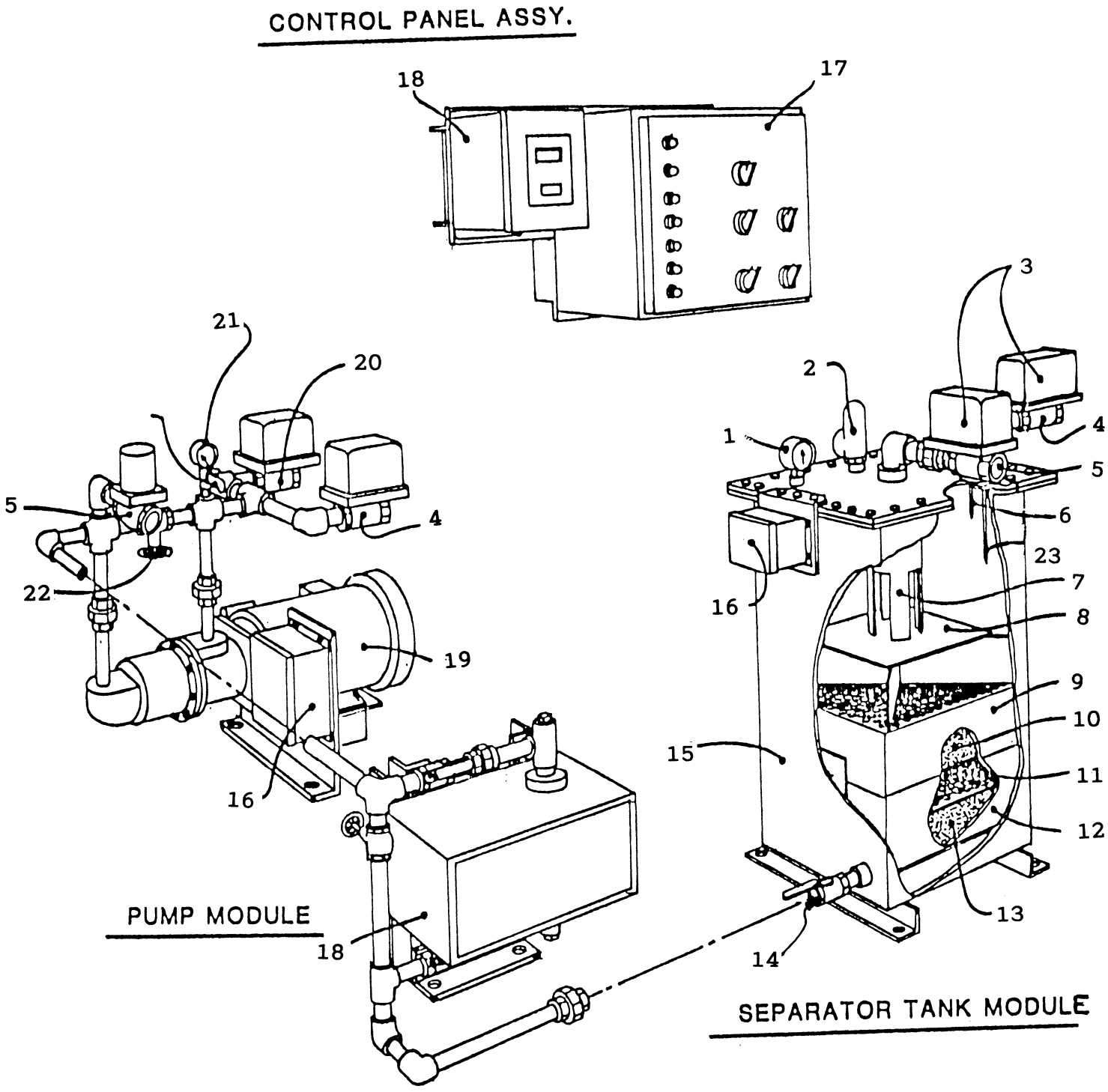

(COURTESY OF PARMATIC POLLUTION CONTROL CORP.)

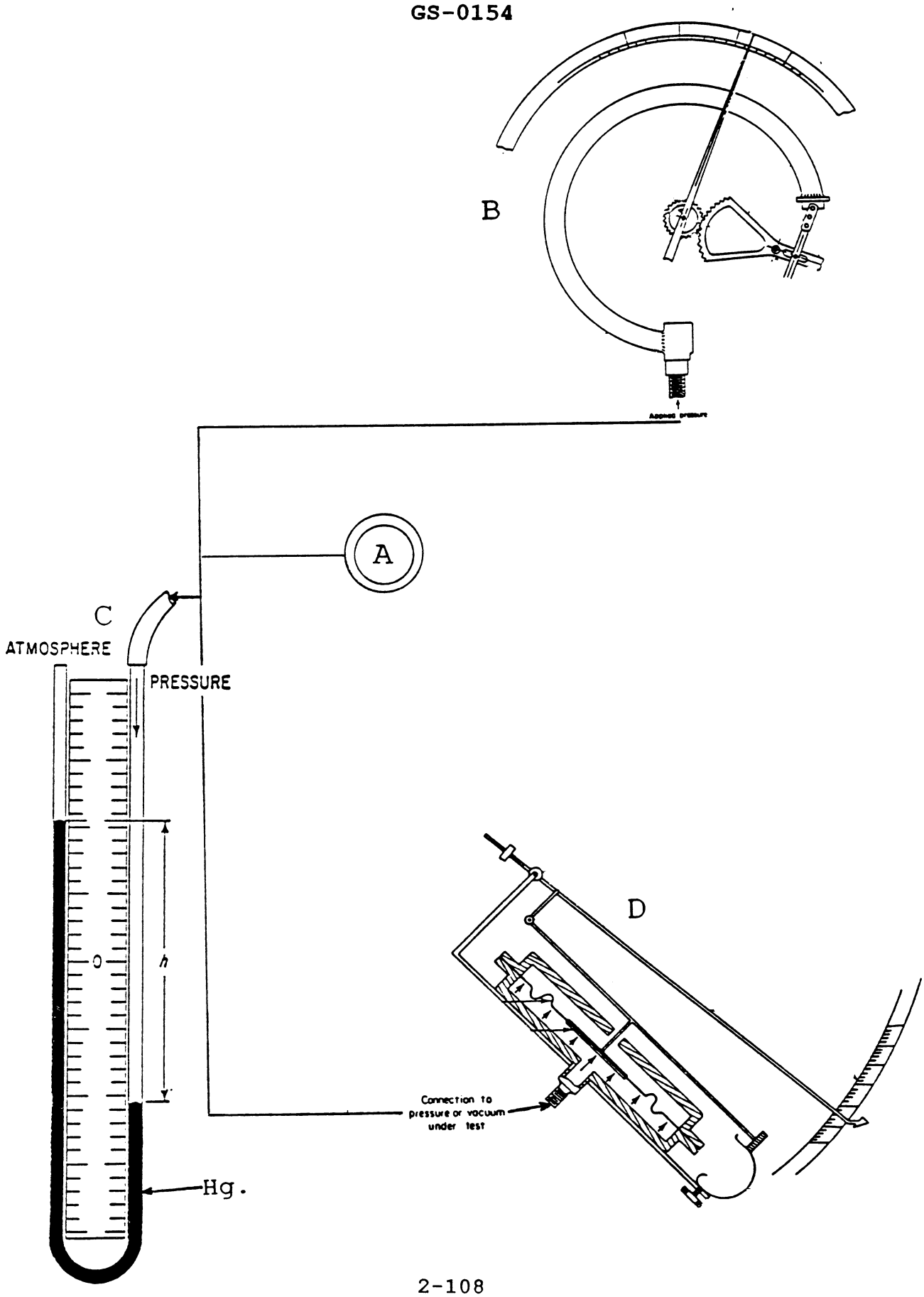
B
A
C
ATMOSPHERE
PRESSURE
0
h
Hg.
D
Connection to
pressure or vacuum
under test

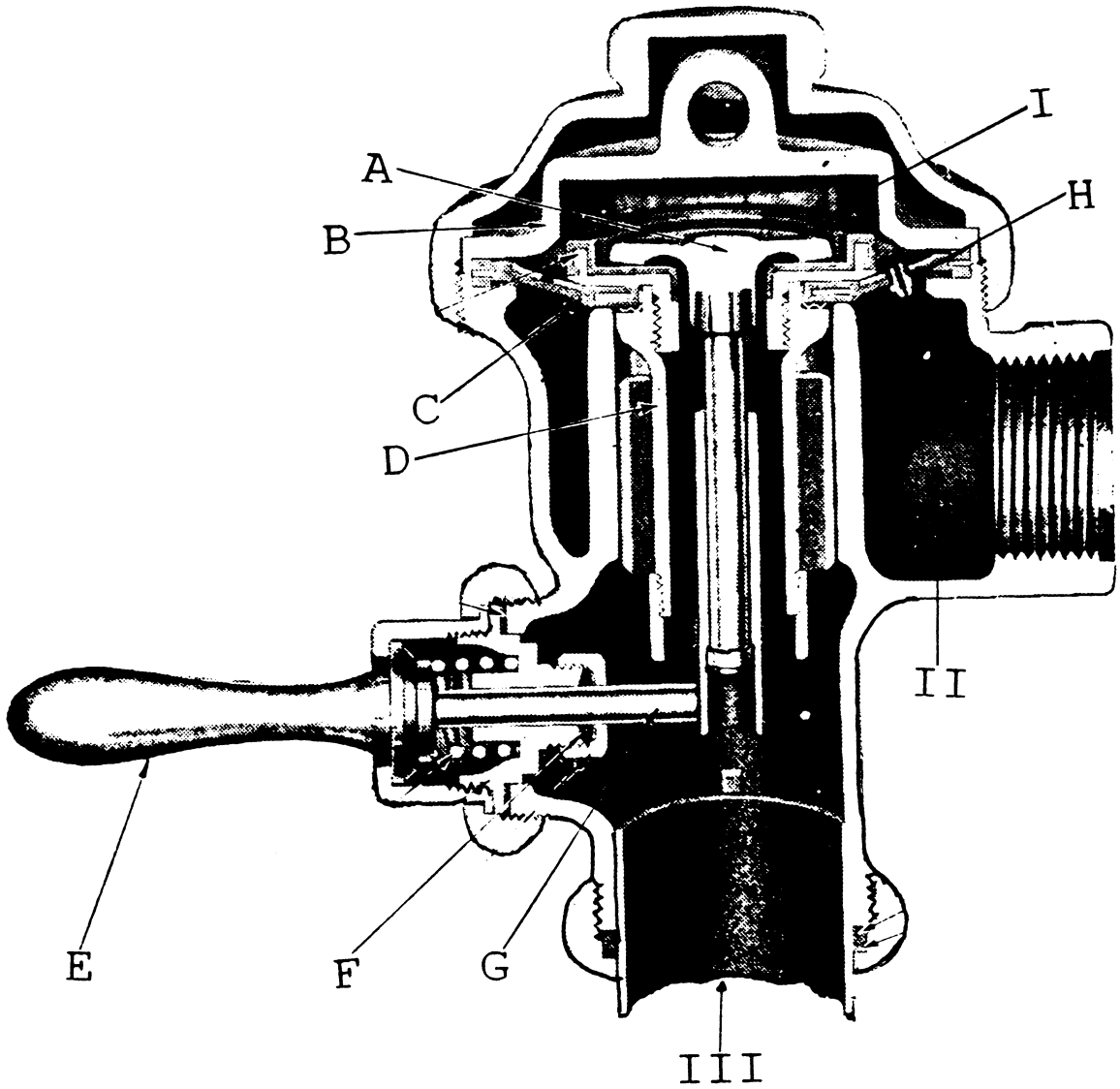

(COURTESY OF SLOAN VALVE COMPANY)

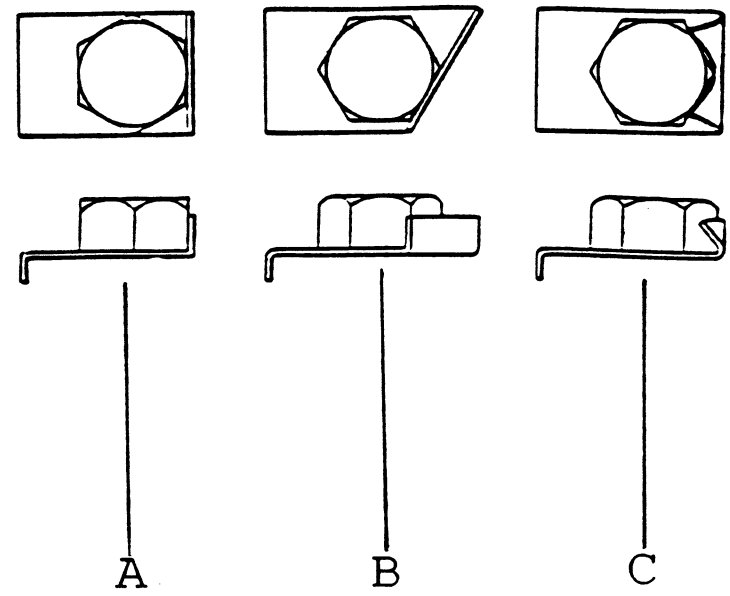
A
B
C

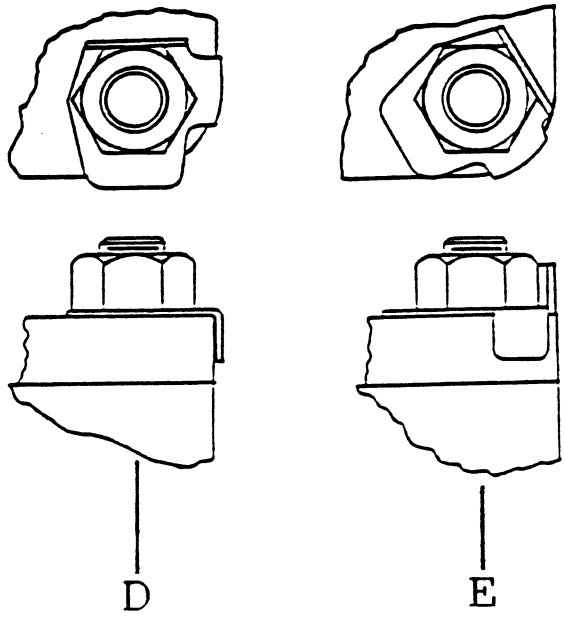
D
E

COMMON BARGE

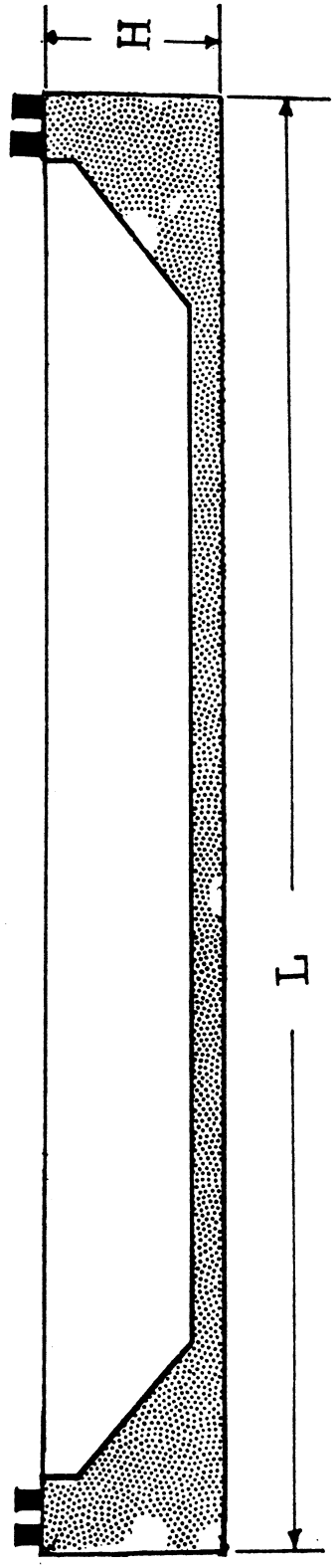

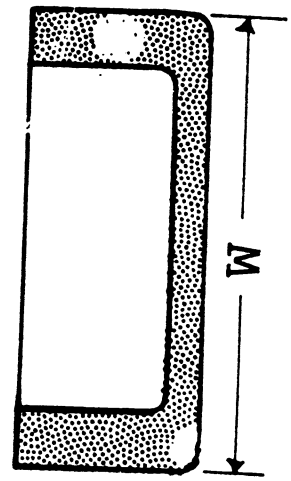

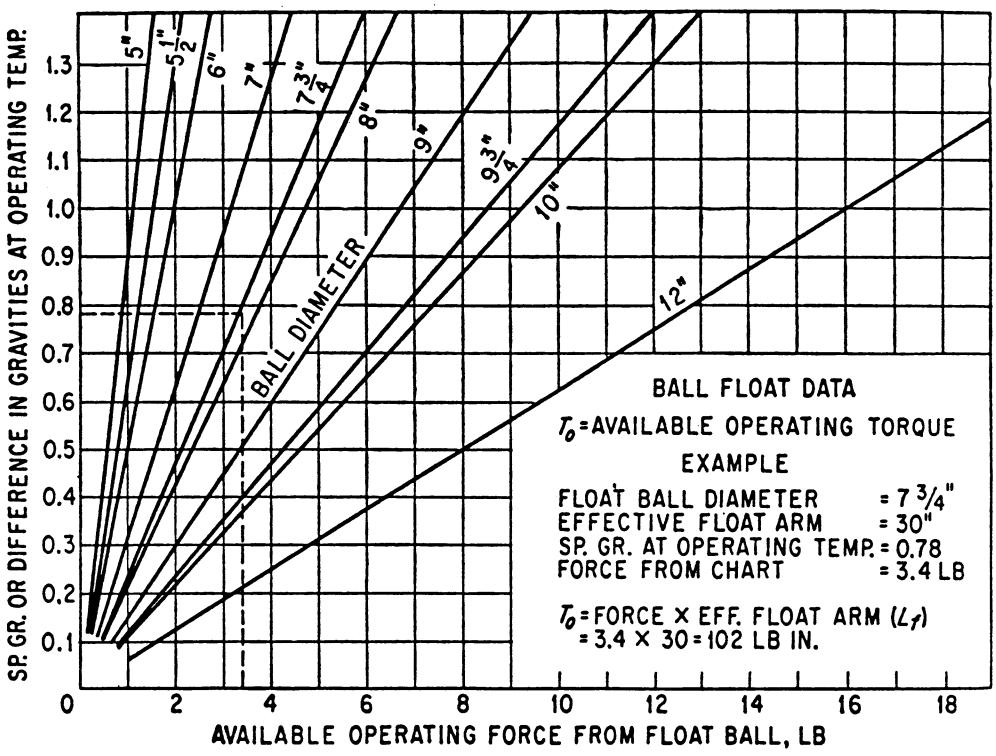
SP. GR. OR DIFFERENCE IN GRAVITIES AT OPERATING TEMP.
AVAILABLE OPERATING FORCE FROM FLOAT BALL, LB
BALL DIAMETER
5"
5 1/2"
6"
7"
7 3/4"
8"
9"
9 3/4"
10"
12"
BALL FLOAT DATA
T_0 = AVAILABLE OPERATING TORQUE
EXAMPLE
FLOAT BALL DIAMETER = 7 3/4"
EFFECTIVE FLOAT ARM = 30"
SP. GR. AT OPERATING TEMP. = 0.78
FORCE FROM CHART = 3.4 LB
T_0 = FORCE × EFF. FLOAT ARM (L_f)
= 3.4 × 30 = 102 LB IN.

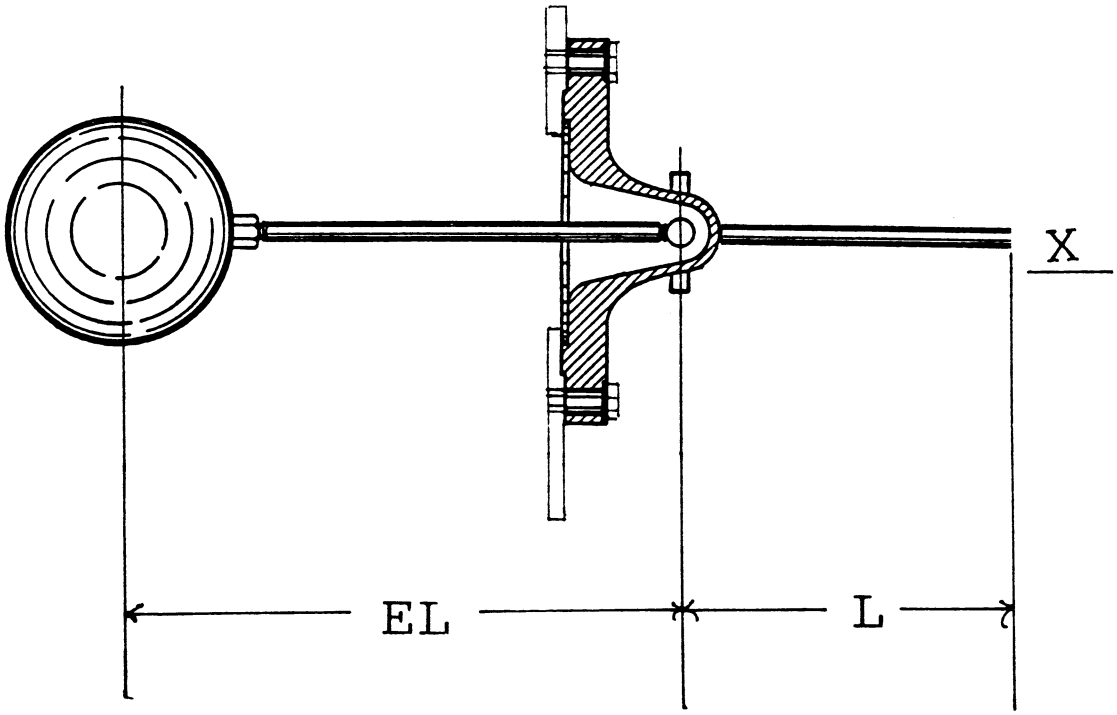
X
EL
L

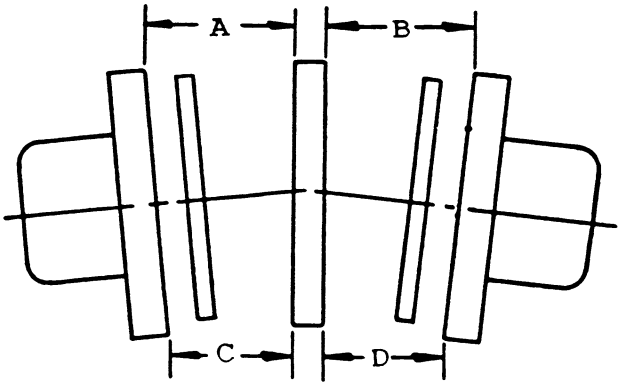

Figure 1

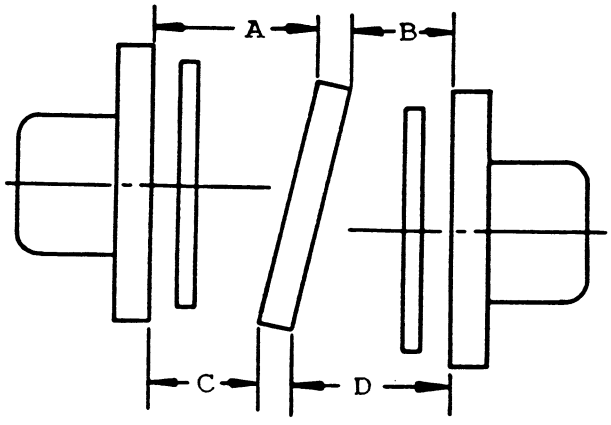

Figure 2

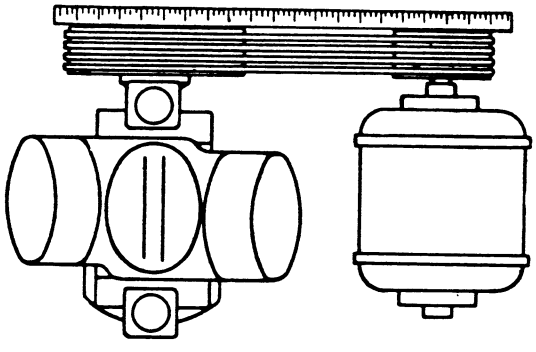

Figure 3

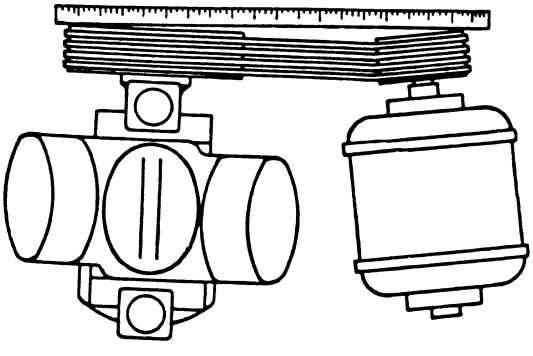

Figure 4

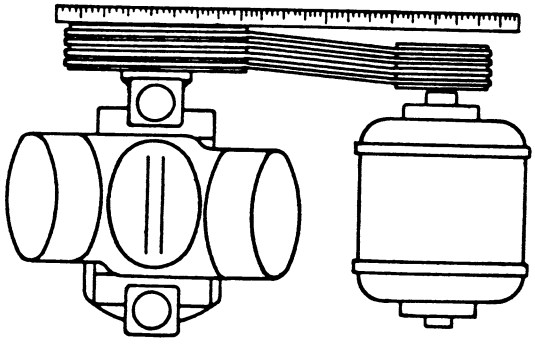

Figure 5

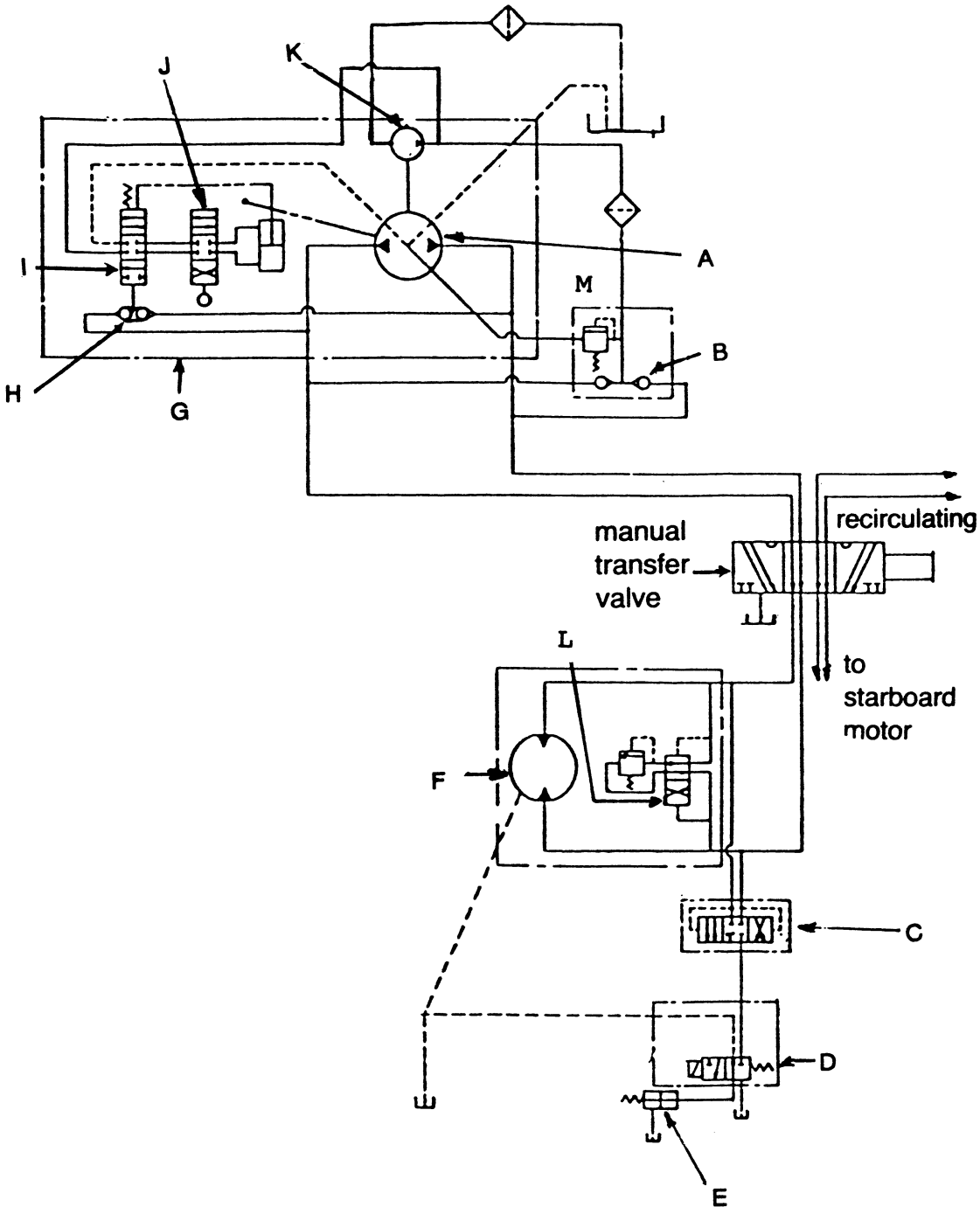
K
J
I
A
M
B
H
G
recirculating
manual
transfer
valve
L
to
starboard
motor
F
C
D
E

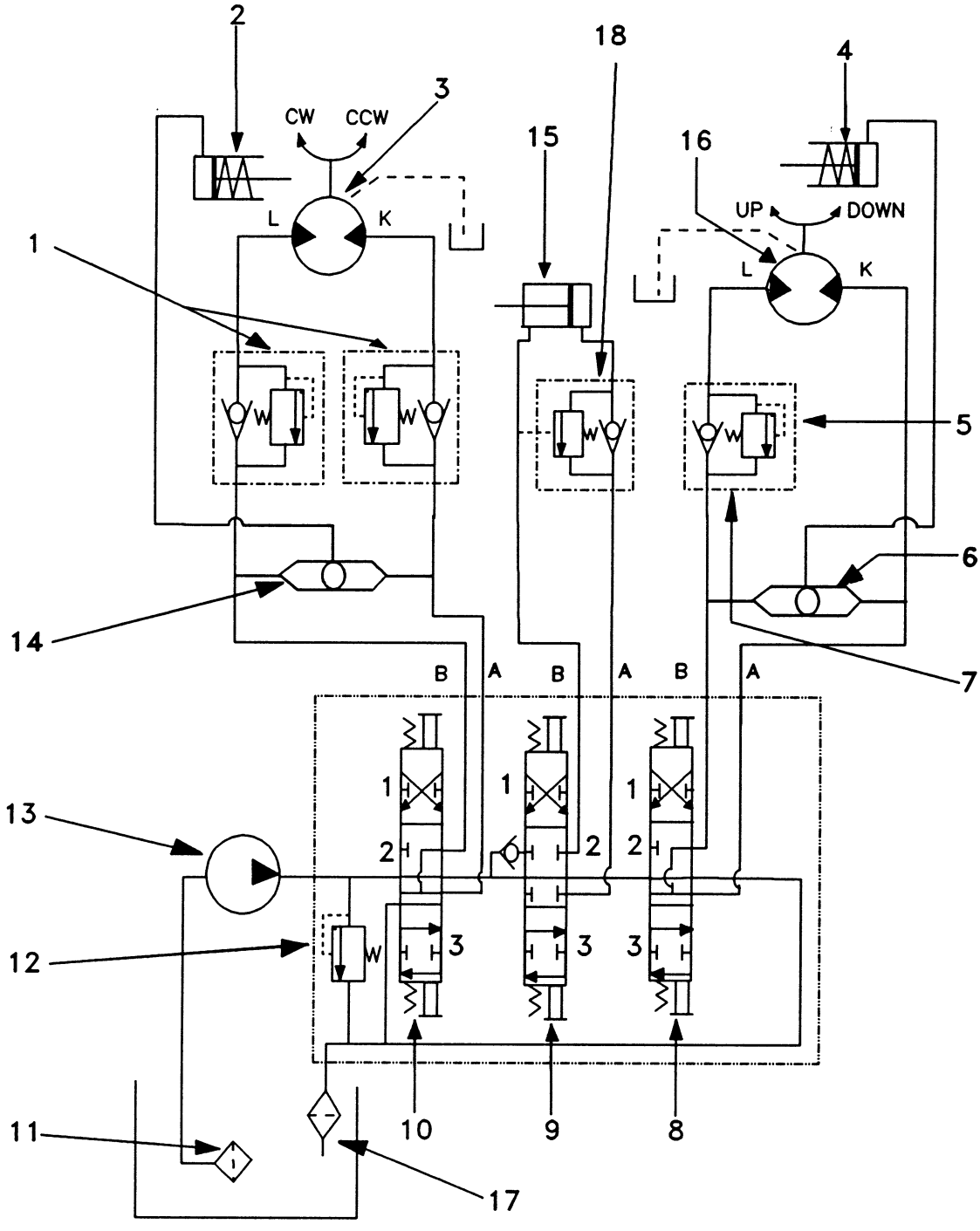
2
3
CW
CCW
L
K
1
18
15
16
4
UP
DOWN
L
K
5
6
14
7
B
A
B
A
B
A
1
2
3
1
2
3
1
2
3
13
12
11
10
9
8
17

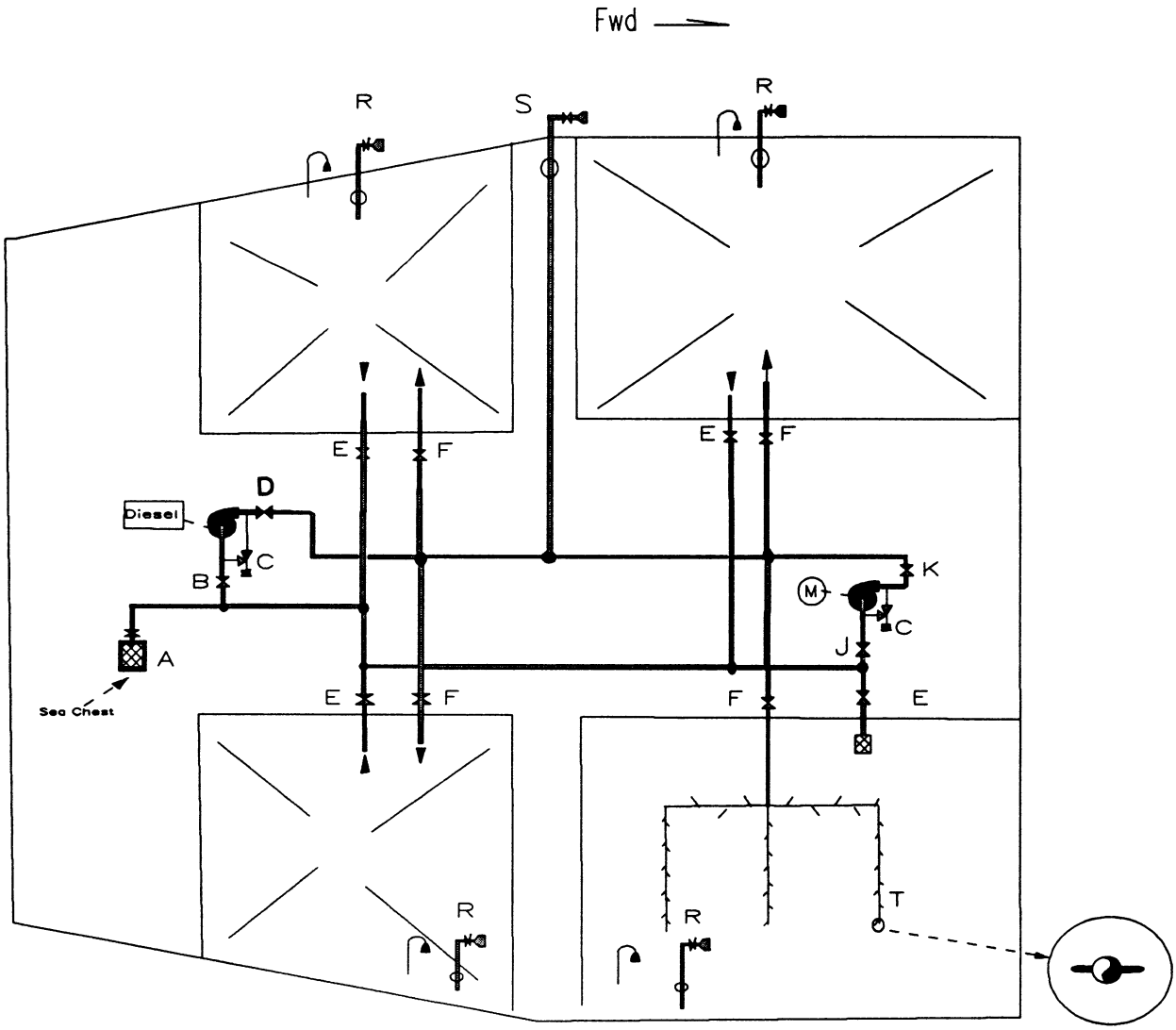
Fwd
R
S
R
E
F
E
F
D
Diesel
C
B
K
M
C
J
A
Sea Chest
E
F
F
E
R
R
T

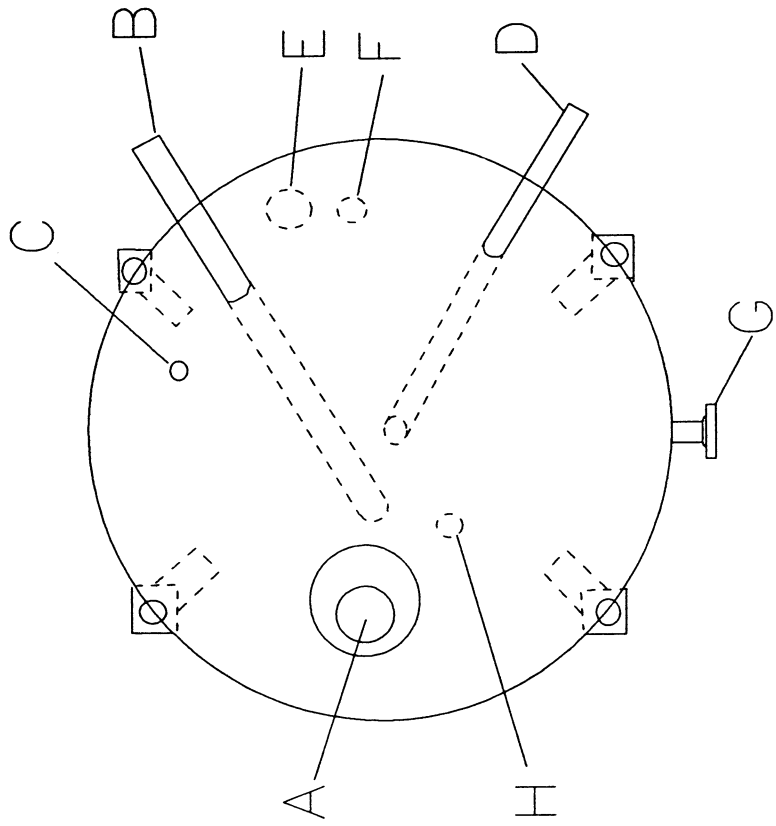
A
B
C
D
E
F
G
H

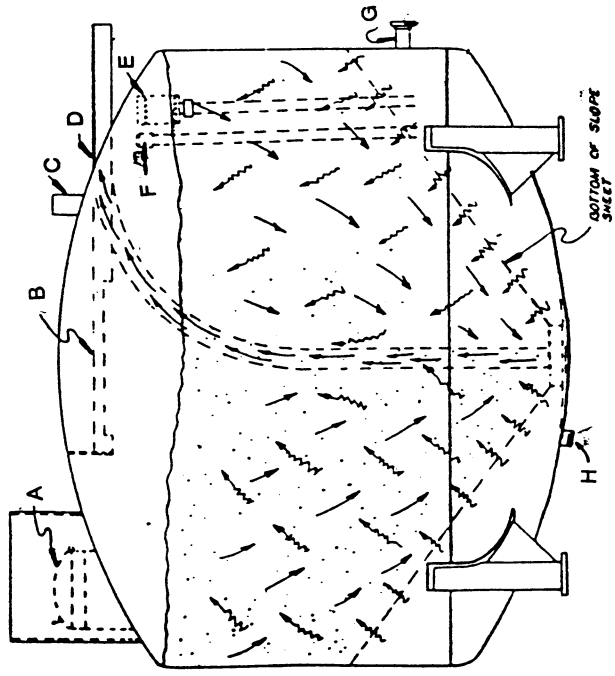
A
B
C
D
E
F
G
H
BOTTOM OF SLOPE SHEET