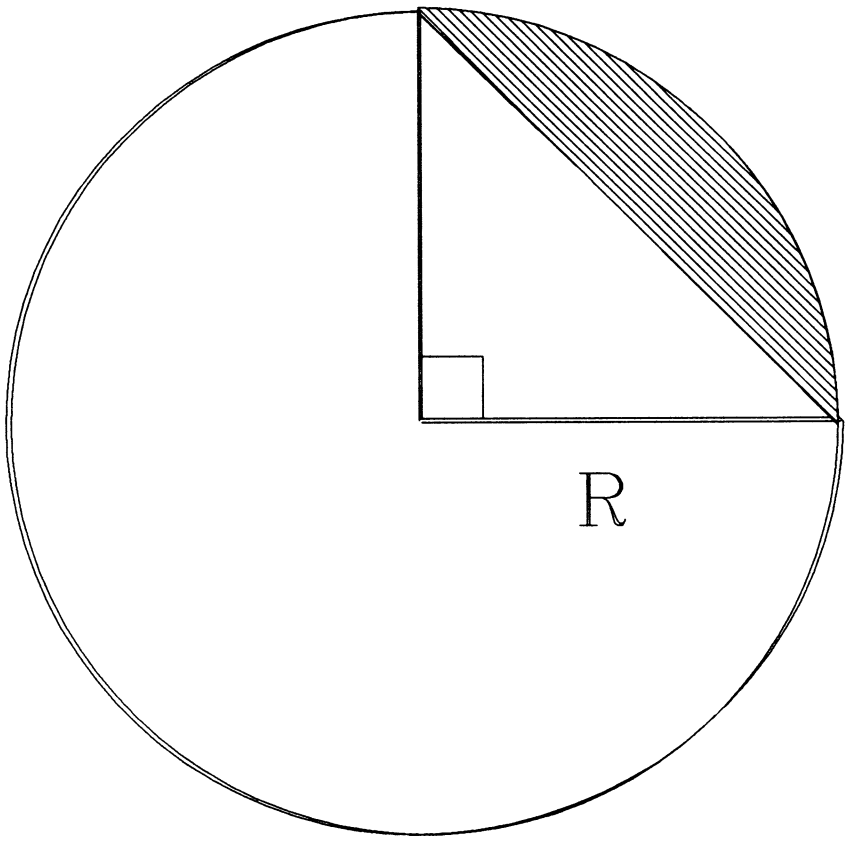
R

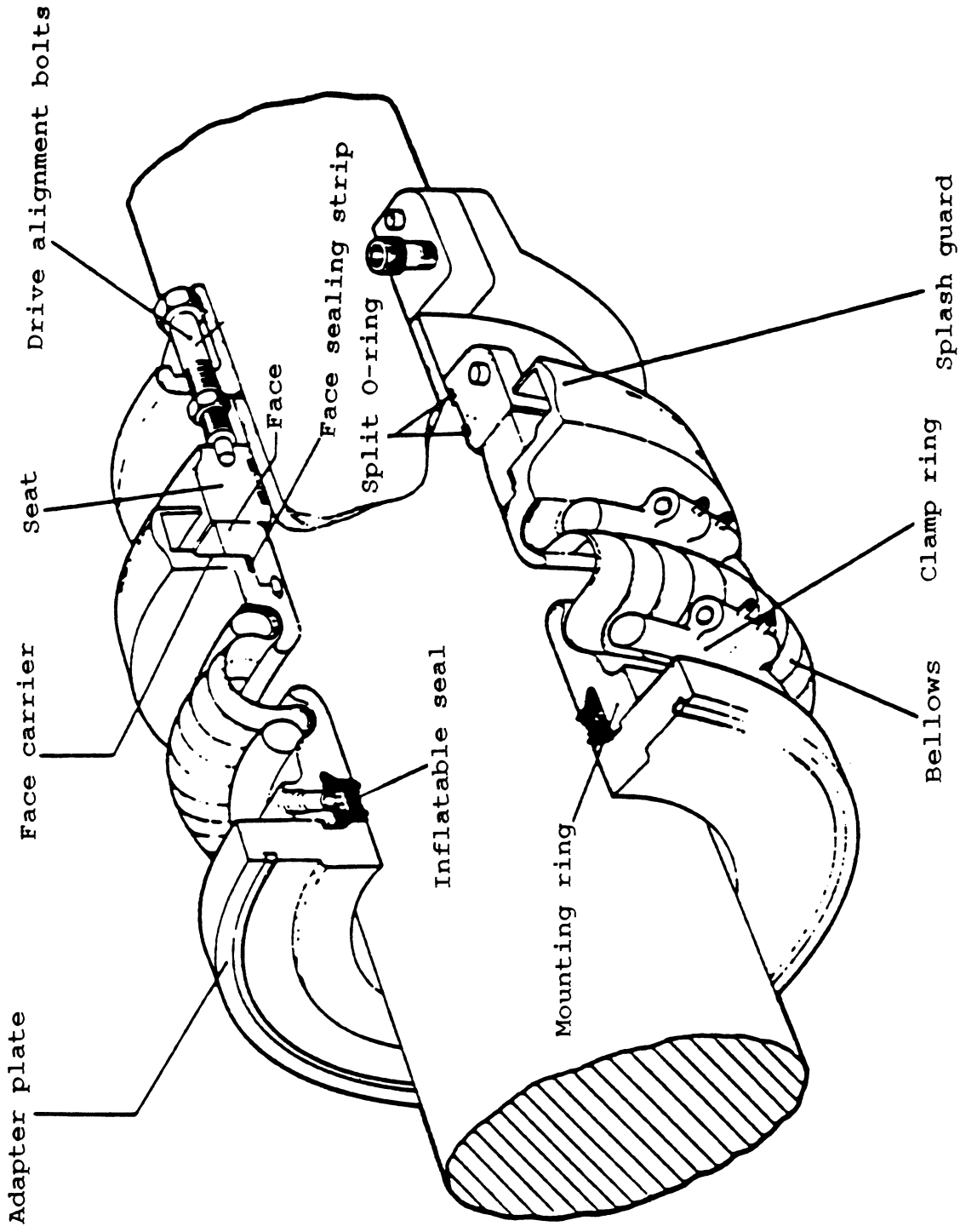
Drive alignment bolts
Face sealing strip
Face
Split O-ring
Seat
Face carrier
Inflatable seal
Adapter plate
Mounting ring
Splash guard
Clamp ring
Bellows

GS-0136

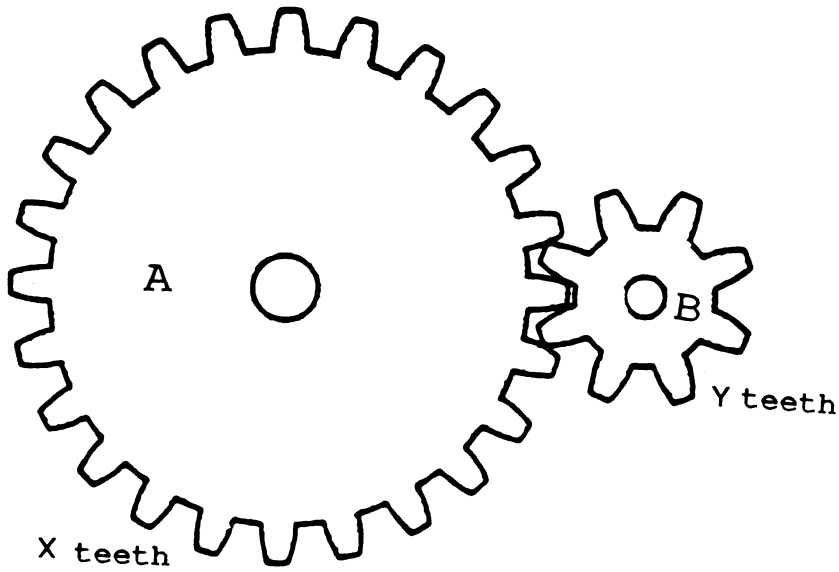

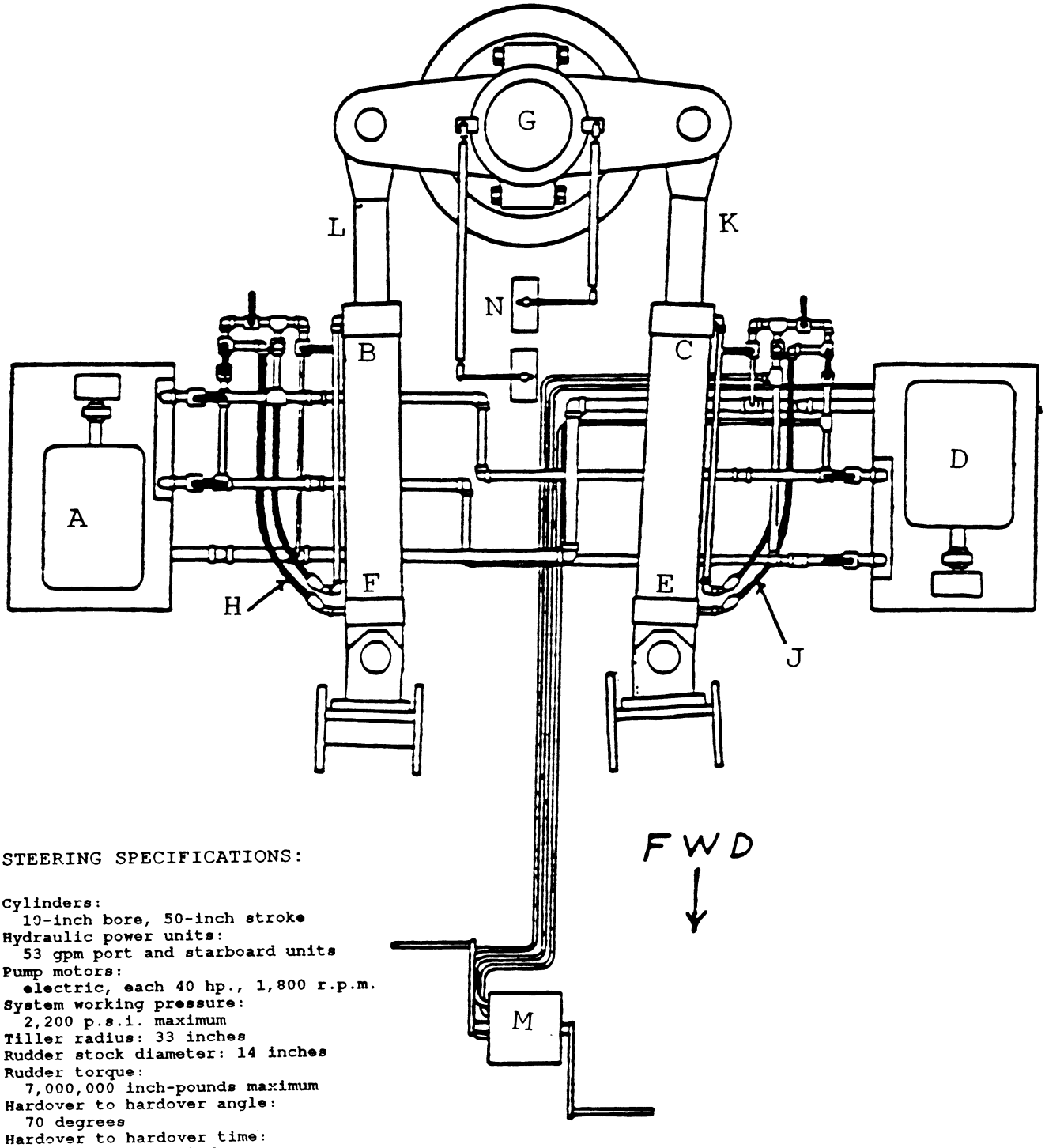

STEERING SPECIFICATIONS:

Cylinders:
10-inch bore, 50-inch stroke
Hydraulic power units:
53 gpm port and starboard units
Pump motors:
electric, each 40 hp., 1,800 r.p.m.
System working pressure:
2,200 p.s.i. maximum
Tiller radius: 33 inches
Rudder stock diameter: 14 inches
Rudder torque:
7,000,000 inch-pounds maximum
Hardover to hardover angle:
70 degrees
Hardover to hardover time:
28 seconds for 65 degrees

Typical constant-speed characteristic curves for a high-specific-speed pump

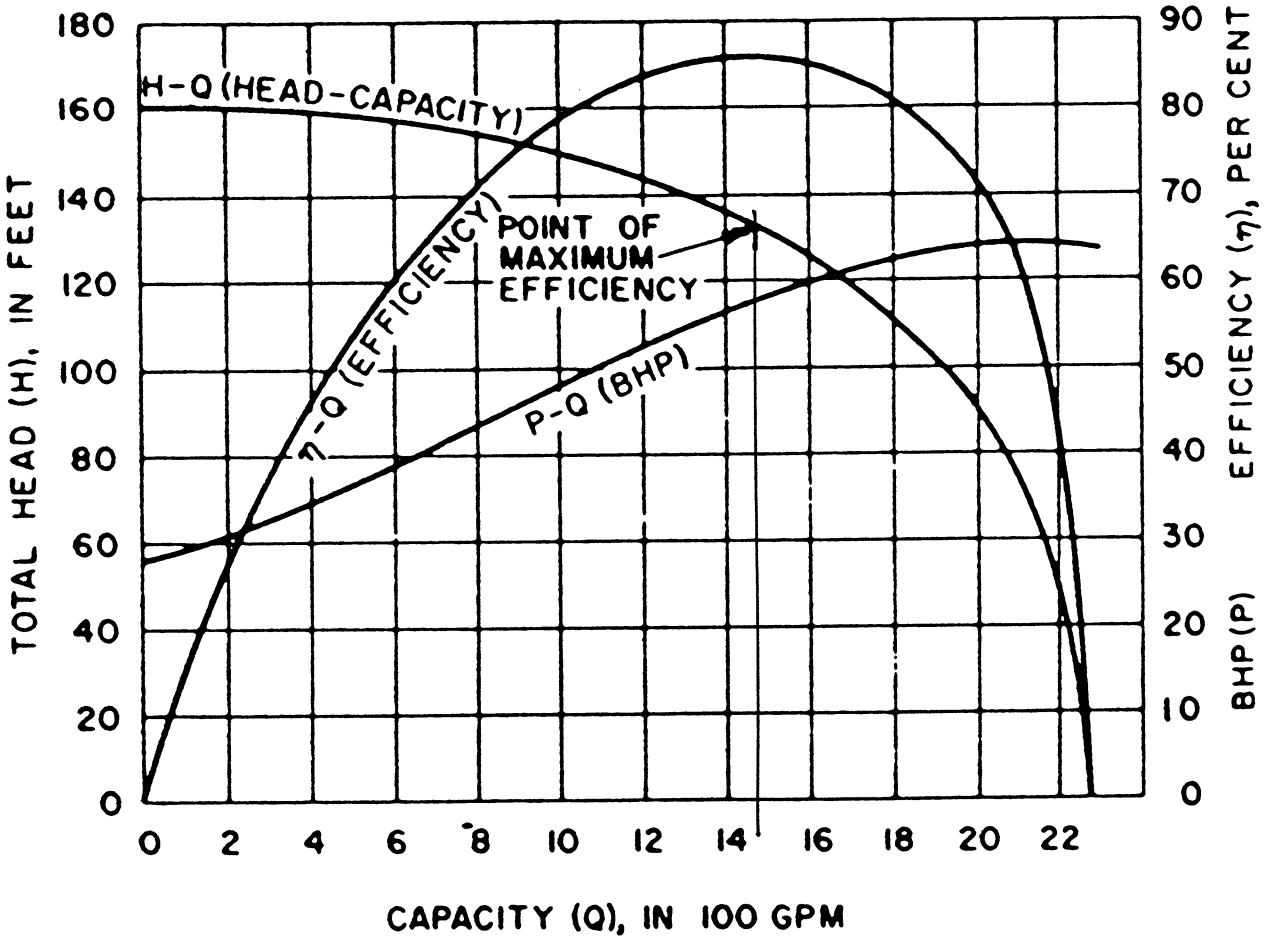

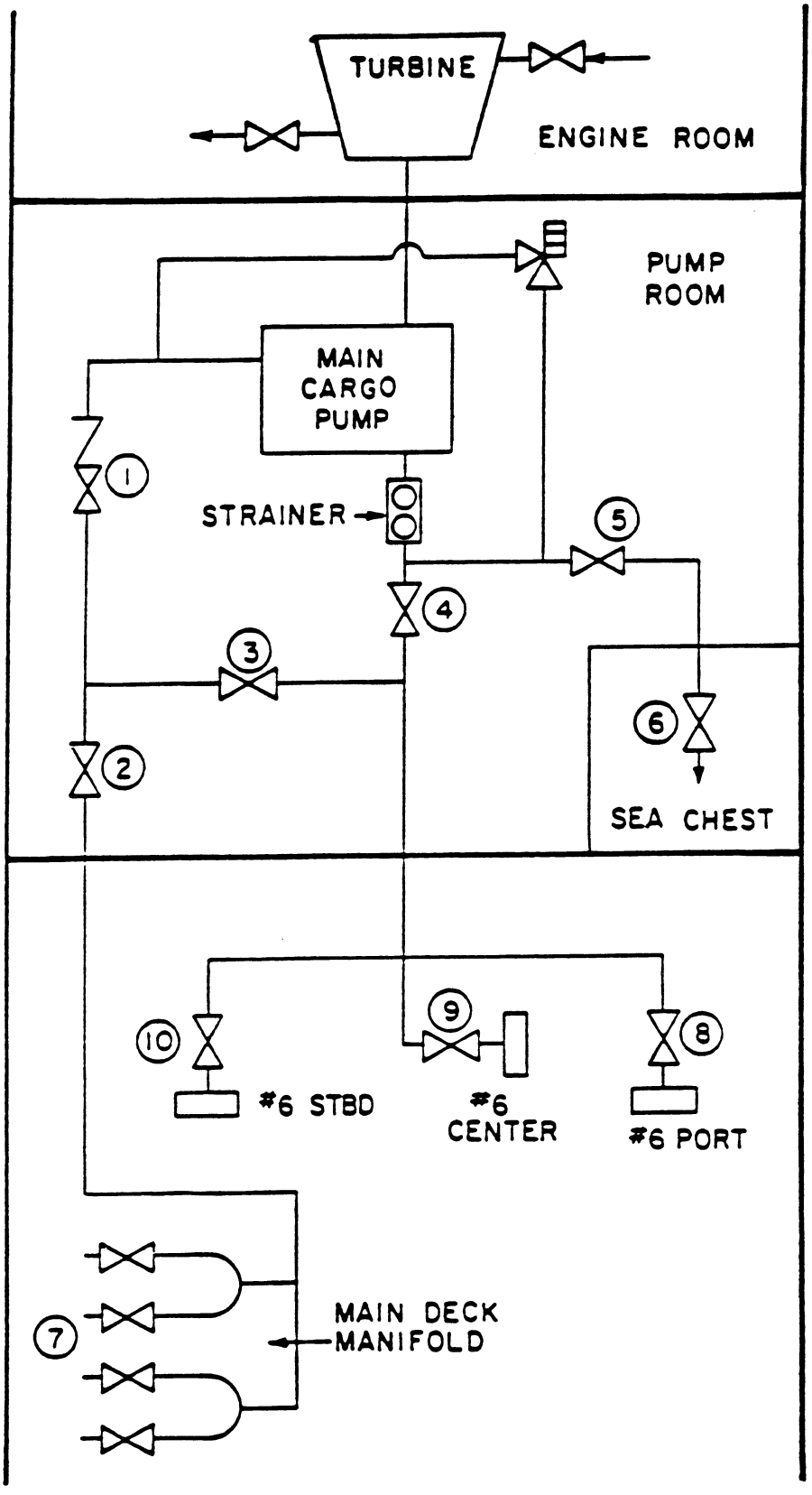
TURBINE
ENGINE ROOM
PUMP ROOM
MAIN CARGO PUMP
STRAINER
1
2
3
4
5
6
SEA CHEST
7
MAIN DECK MANIFOLD
8
9
10
#6 STBD
#6 CENTER
#6 PORT

GS-0140

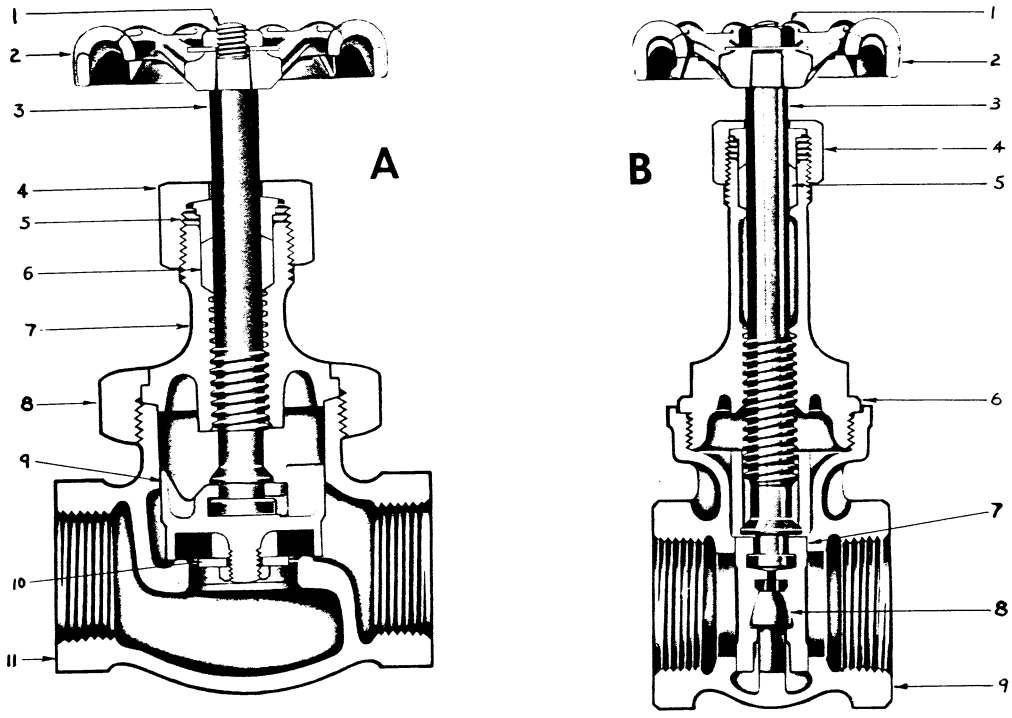

GS-0141

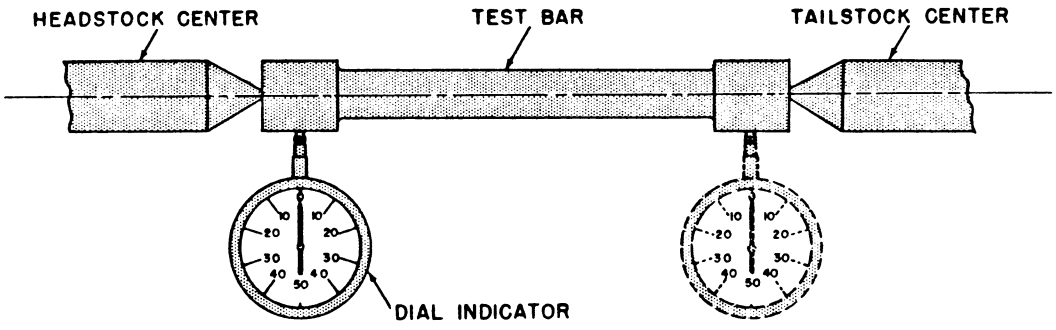

Alignment of lathe centers with a dial indicator.

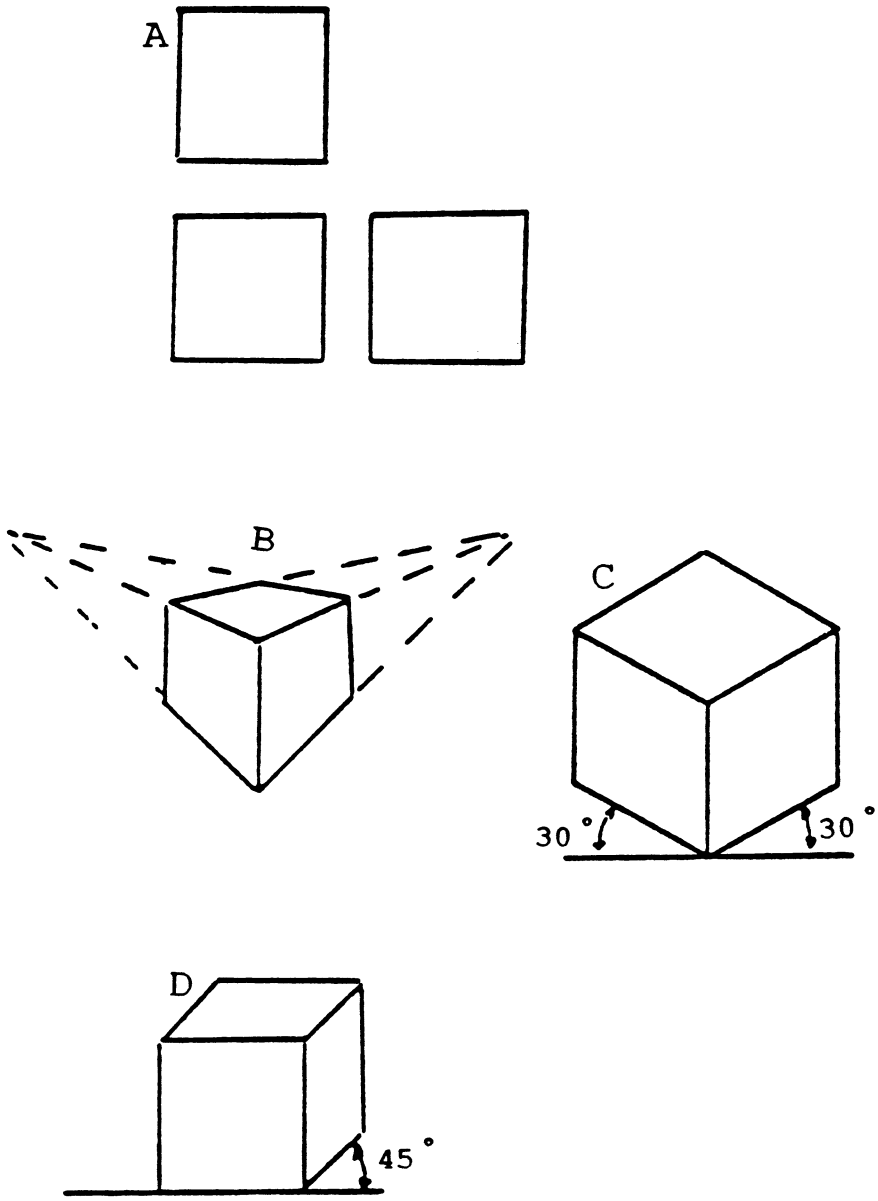
A
B
C
30°
30°
D
45°

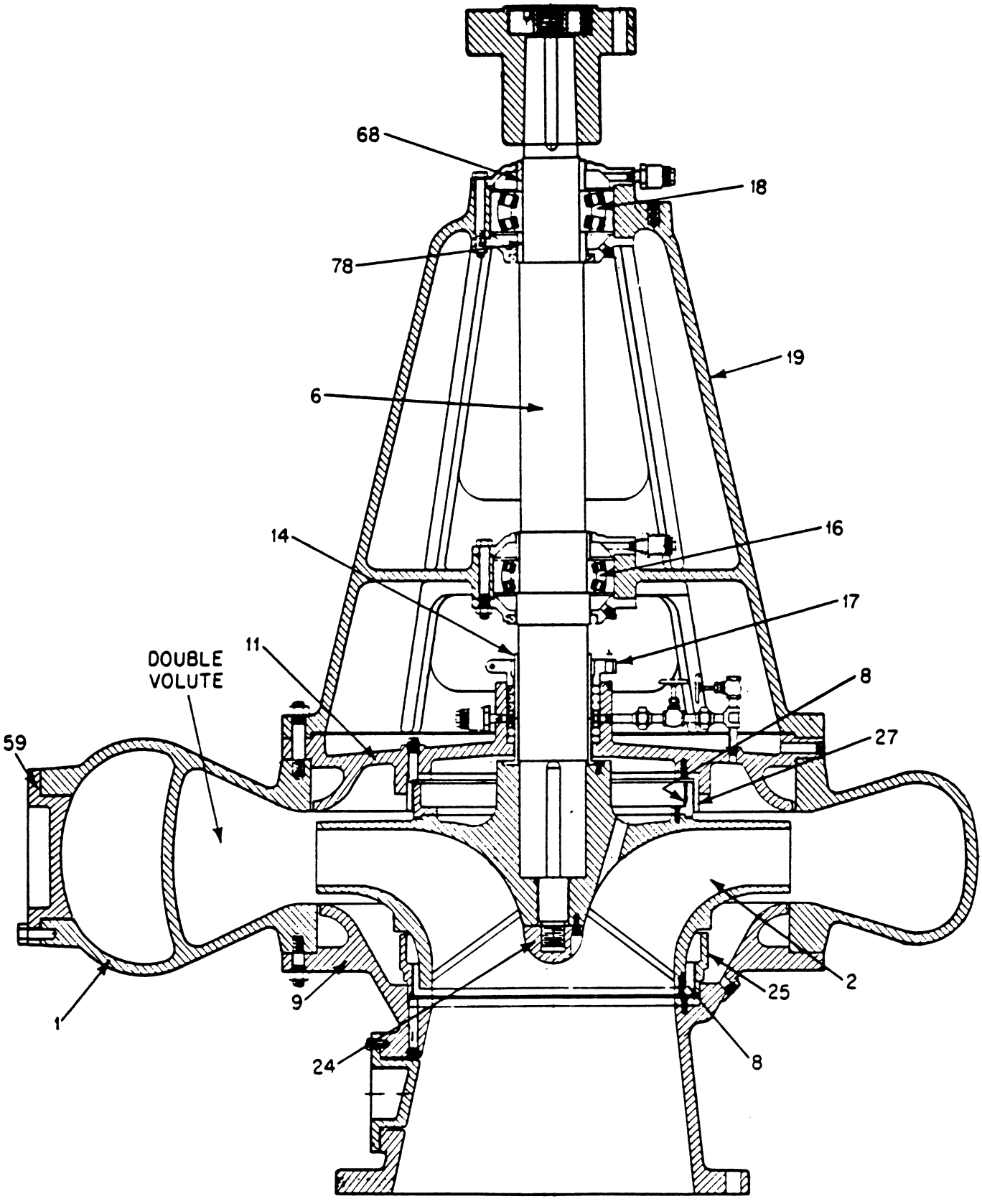
68
18
78
19
6
14
16
17
11
DOUBLE
VOLUTE
8
59
27
2
25
9
1
24
8

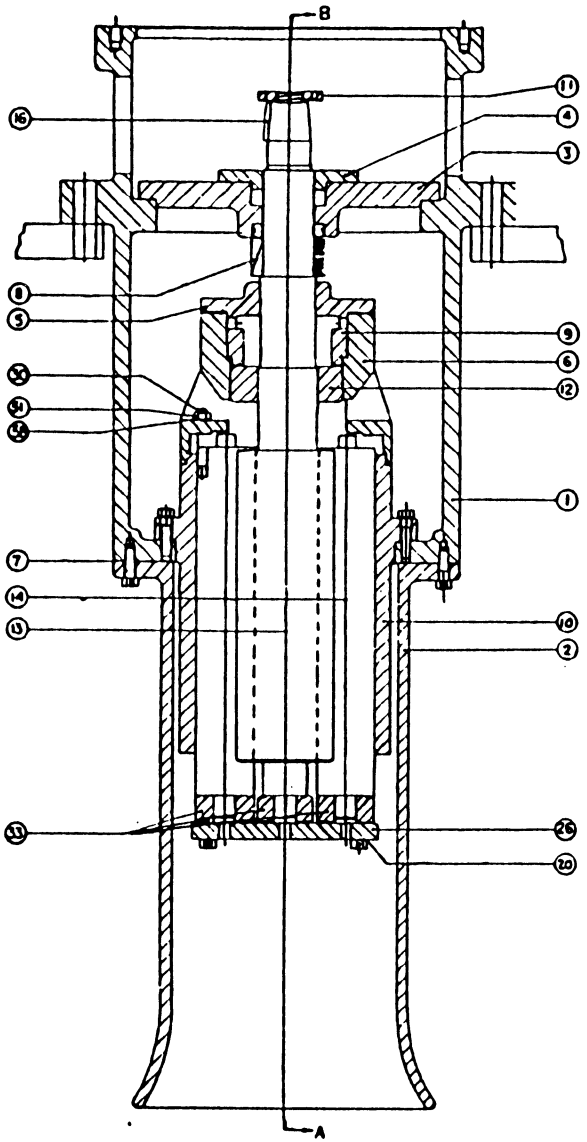

LIST OF MATERIAL FOR ONE UNIT

PC NO	NAME	MATERIAL
1	PUMP CASE	CAST STEEL
2	INLET BELL	CAST STEEL
3	SEAL HOUSING	CAST STEEL
4	PACKING GLAND	GUN METAL
5	BEARING RETAINER	BEARING BRONZE
6	BALANCE ROTOR HOUSING	BEARING BRONZE
7	GASKET	PLANT FIBRE
8	MECHANICAL SEAL FOR 2,3, 8" DIA SHAFT	STEEL & SYN RUBBER
9	SPACER	BEARING BRONZE
10	ROTOR HOUSING	BEARING BRONZE
11	CHECK NUT	STEEL
12	BALANCE PISTON	STEEL
13	POWER ROTOR	STEEL
14	CLER ROTOR	STEEL
15	SOC HD SET SCREW ½ - 20 x 7/16" LONG	STEEL
16	KEY	STEEL
17	BOLT 3/8" - 16 x 1" LONG	STEEL
18	BOLT 3/8" - 16 x 1 ½" LONG	STEEL
19	EXTERNAL TOOTH LOCKWASHER	STEEL
20	EXTERNAL TOOTH LOCKWASHER	STEEL
21	BOLT ½" - 13 x 1 ½" LONG	STEEL
22	SOC. HD PIPE PLUG - 1/8" SIZE	BRASS
23	INLET BELL	CAST STEEL
24	BOLT ½" - 13 x 1 ½" LONG	STEEL
25	SPACER	STEEL PIPE
26	THRUST PLATE	STEEL
27	GASKET	PLANT FIBRE
28	OIL BALANCE TUBE	STEEL
29	O RING	SYNTHETIC RUBBER
30	STUD 5/8" - 11 x 3 ½" LONG	STEEL
31	NUT 5/8" - 11" THDS.	STEEL
32	BOLT ½" - 13 x 4 ½" LONG	STEEL
33	THRUST SHOE	BEARING BRONZE
34	LACING WIRE 1/16" DIA. x 16 FT. LG. (CUT TO SUIT)	MONEL
35	PKG RING FOR 2 3/8" DIA SHAFT ½" SQ	SYMBOL 430
36	BOLT 3/8" - 16" x 1 3/4" LONG	STEEL
37	STUD 3/4" - 10 x 3" LONG	STEEL
38	EXTERNAL TOOTH LOCKWASHER	STEEL
39	SPRING PIN 3/32" x 3/8" LONG	STEEL
40	NAME PLATE (SERIAL)	BRASS SHEET
41	NAME PLATE (CAUTION)	BRASS SHEET
42	NAME PLATE (ROTATION)	BRASS SHEET

GS-0145

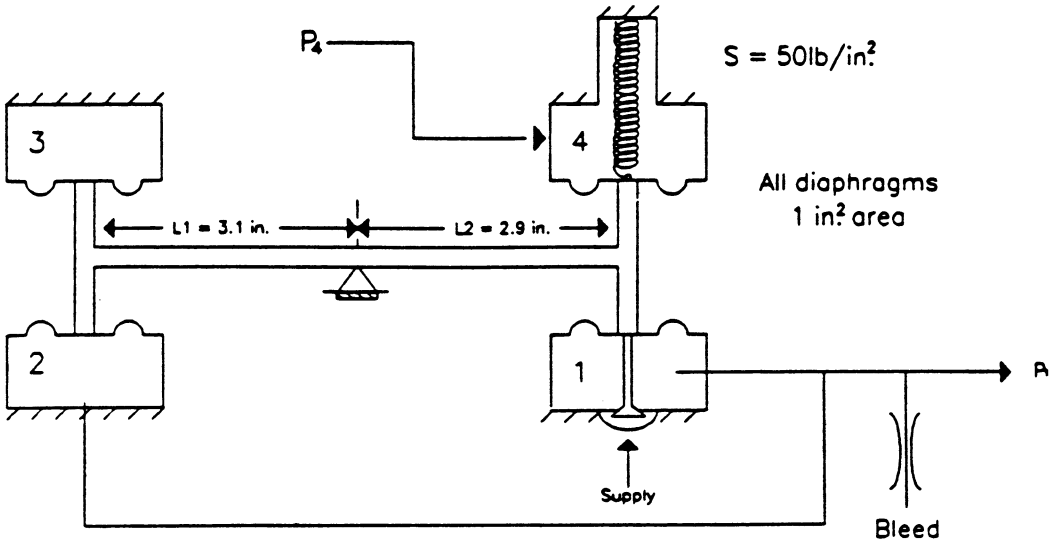

GS-0146

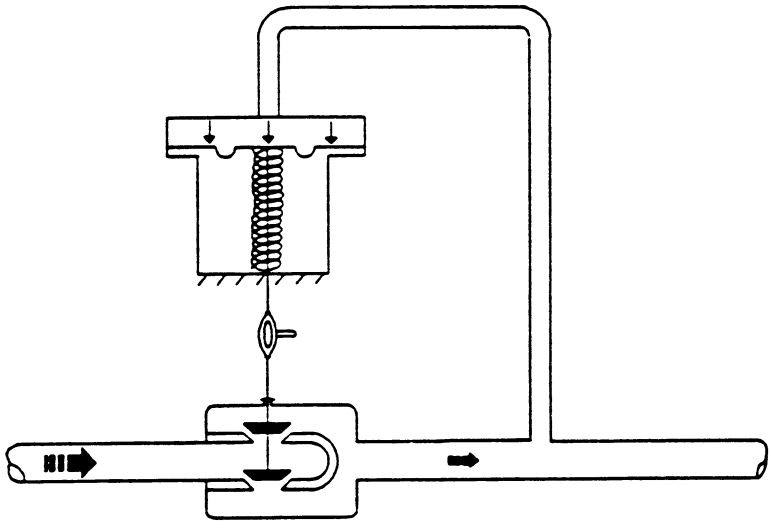

GS-0147

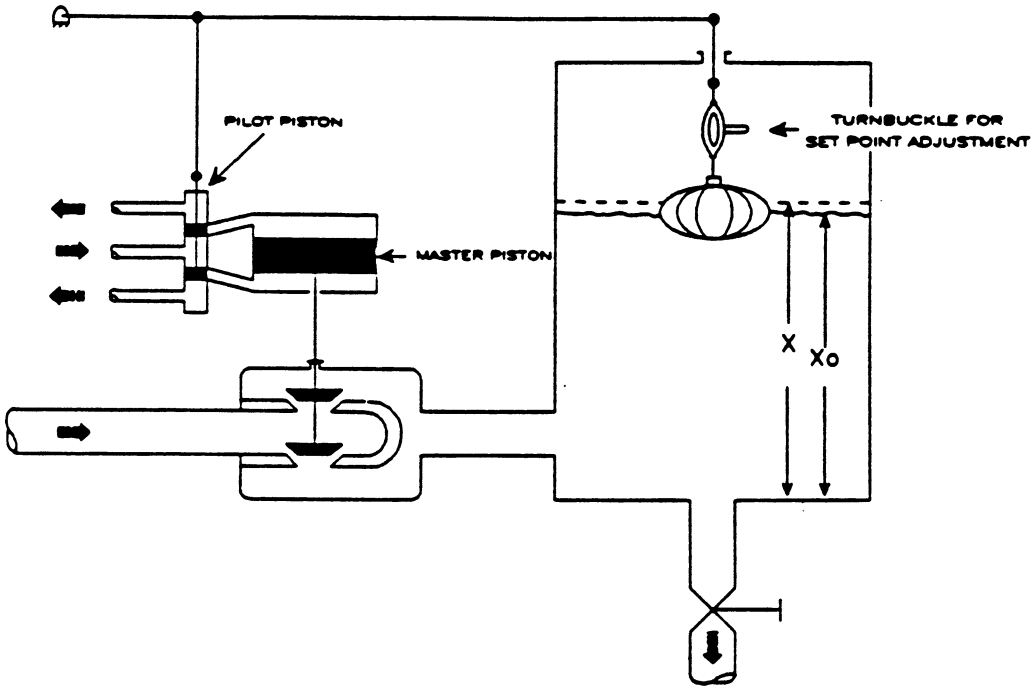

GS-0148

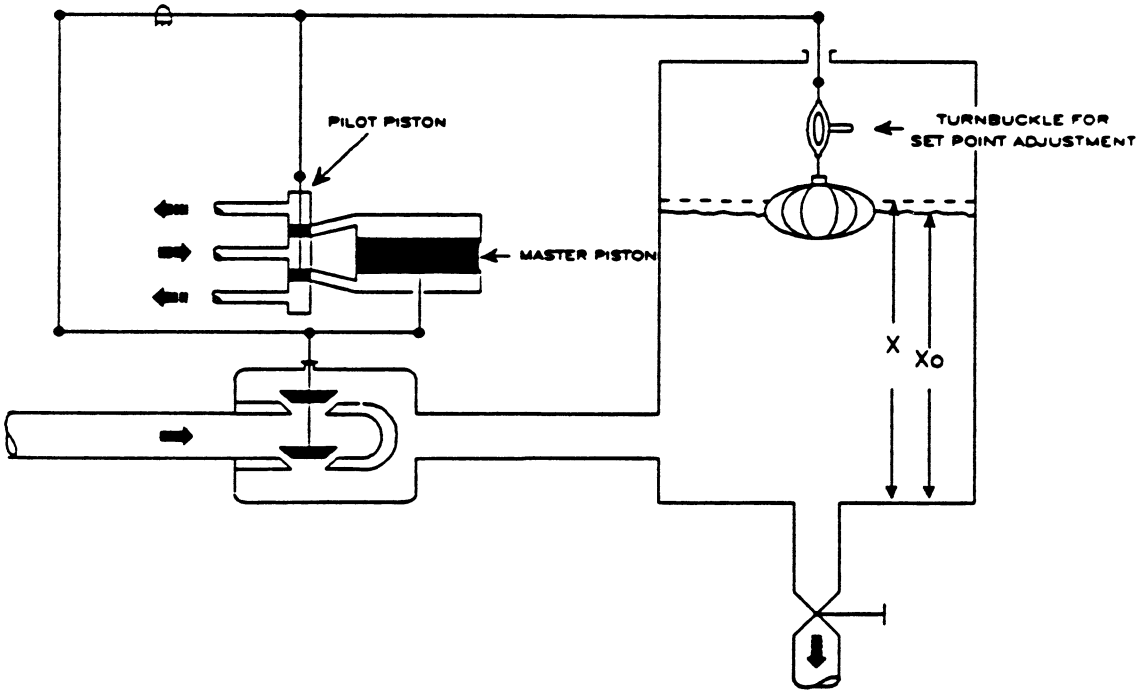

ASTM–IP

Table 8
Pounds per U.S. Gallon
and U.S. Gallons per Pound

30-45° API

API Gravity 60° F.	Pounds per U.S. Gallon at 60° F.	U.S. Gallons at 60° F. per Pound	API Gravity 60° F.	Pounds per U.S. Gallon at 60° F.	U.S. Gallons at 60° F. per Pound	API Gravity 60° F.	Pounds Per U.S. Gallon at 60° F.	U.S. Gallons at 60° F. per Pound
30.0	7.296	0.13707	35.0	7.076	0.14132	40.0	6.870	0.14557
30.1	7.291	0.13715	35.1	7.072	0.14140	40.1	6.866	0.14565
30.2	7.287	0.13724	35.2	7.068	0.14149	40.2	6.862	0.14574
30.3	7.282	0.13732	35.3	7.064	0.14157	40.3	6.858	0.14582
30.4	7.278	0.13741	35.4	7.059	0.14166	40.4	6.854	0.14591
30.5	7.273	0.13749	35.5	7.055	0.14174	40.5	6.850	0.14599
30.6	7.269	0.13758	35.6	7.051	0.14183	40.6	6.846	0.14608
30.7	7.264	0.13768	35.7	7.047	0.14191	40.7	6.842	0.14616
30.8	7.260	0.13775	35.8	7.042	0.14200	40.8	6.838	0.14625
30.9	7.255	0.13783	35.9	7.038	0.14208	40.9	6.834	0.14633
31.0	7.251	0.13792	36.0	7.034	0.14217	41.0	6.830	0.14642
31.1	7.246	0.13800	36.1	7.030	0.14225	41.1	6.826	0.14650
2	7.242	0.13809	36.2	7.026	0.14234	41.2	6.822	0.14659
	7.237	0.13817	36.3	7.021	0.14242	41.3	6.818	0.14667
		0.13826	36.4	7		41.4	6.814	0.1467
							6.810	

GS-0149

SYMBOLS	
	GLOBE OR ANGLE VALVE
	GATE VALVE
	PRESSURE GAGE
	STRAINER (SEE NOTES 2, 3 & 8)
PV	PNEUMATIC CONTROL VALVE
T	TRAP
DP	DIRT POCKET, 6" MIN. LENGTH
	UNION OR FLANGE JOINT ON COIL
C	CHECK VALVE

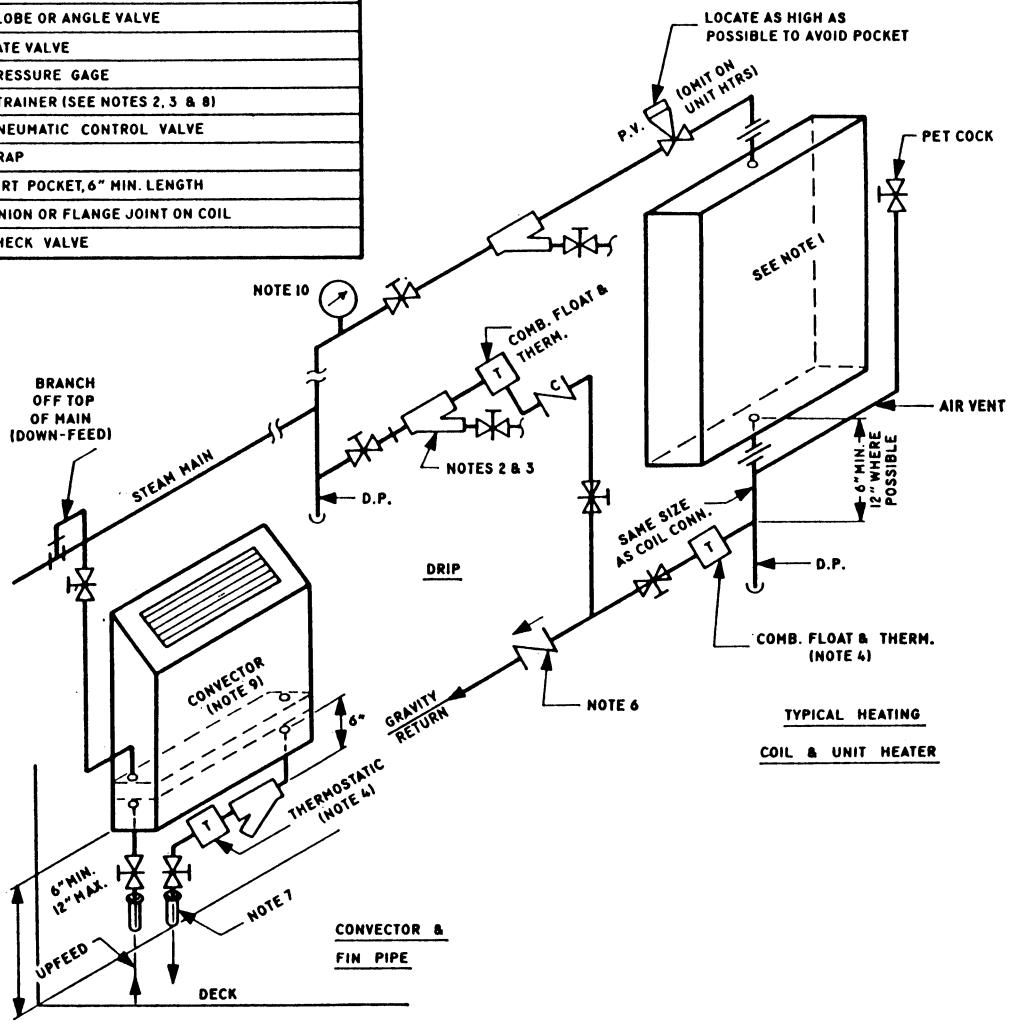

TYPICAL HEATING COIL & UNIT HEATER

CONVECTOR & FIN PIPE

NOTES

1. WHEN TWO OR MORE HEATING COILS ARE REQUIRED, PROVIDE DRAINS FOR EACH COIL AS INDICATED.
2. PIPE STRAINER TO OPEN DRAIN WITHIN SIGHT OF THE VALVE.
3. PROVIDE BLOWOFF COCKS IN EQUIPMENT SPACES ONLY.
4. PROVIDE BARE PIPE COOLING LEG BETWEEN COIL AND TRAP AT LEAST 24" LONG.
5. PROVIDE STRAINER AHEAD OF TRAP ON UNIT HEATERS.
6. PROVIDE CHECK VALVE IN RETURN ONLY WHERE CONDENSATE MUST BE LIFTED.
7. PROVIDE STUFFING TUBES IN WET SPACES ONLY, DESIGNED TO THERMALLY ISOLATE PIPE FROM STRUCTURE. AT ALL OTHER PENETRATIONS, PROVIDE OVERSIZED CUTS WITH SUITABLE SLEEVES LARGE ENOUGH TO PASS THE FULL THICKNESS OF STANDARD PIPE INSULATION.
8. ALL STRAINERS SHALL BE OF THE SELF-CLEANING TYPE.
9. MOUNT THE CONVECTOR ON THE EXPOSED (COLD) BULKHEAD OR BULKHEAD LINING, WITH A 0.5-IN. AIR SPACE.
10. PROVIDE ONE PRESSURE GAGE IN EACH FAN EQUIPMENT ROOM.

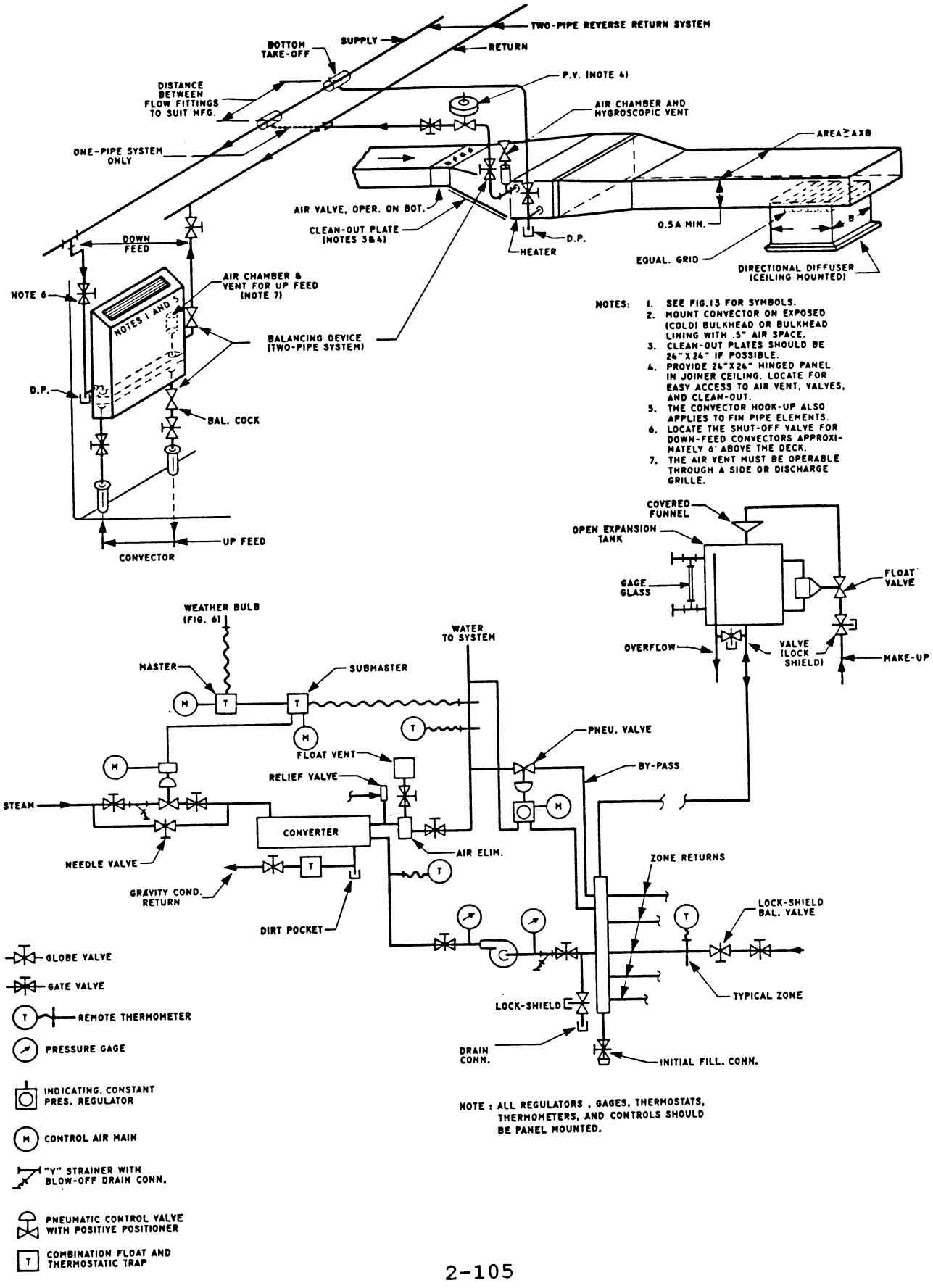
TWO-PIPE REVERSE RETURN SYSTEM
SUPPLY
RETURN
BOTTOM TAKE-OFF
DISTANCE BETWEEN FLOW FITTINGS TO SUIT MFG.
ONE-PIPE SYSTEM ONLY
P.V. (NOTE 4)
AIR CHAMBER AND HYGROSCOPIC VENT
AREA ≥ A X B
AIR VALVE, OPER. ON BOT.
CLEAN-OUT PLATE (NOTES 3&4)
HEATER
D.P.
0.5A MIN.
EQUAL. GRID
DIRECTIONAL DIFFUSER (CEILING MOUNTED)
DOWN FEED
NOTE 6
AIR CHAMBER & VENT FOR UP FEED (NOTE 7)
NOTES 1 AND 2
BALANCING DEVICE (TWO-PIPE SYSTEM)
D.P.
BAL. COCK
UP FEED
CONVECTOR
NOTES: 1. SEE FIG.13 FOR SYMBOLS.
2. MOUNT CONVECTOR ON EXPOSED (COLD) BULKHEAD OR BULKHEAD LINING WITH .5" AIR SPACE.
3. CLEAN-OUT PLATES SHOULD BE 24" X 24" IF POSSIBLE.
4. PROVIDE 24" X 24" HINGED PANEL IN JOINER CEILING. LOCATE FOR EASY ACCESS TO AIR VENT, VALVES, AND CLEAN-OUT.
5. THE CONVECTOR HOOK-UP ALSO APPLIES TO FIN PIPE ELEMENTS.
6. LOCATE THE SHUT-OFF VALVE FOR DOWN-FEED CONVECTORS APPROXIMATELY 6' ABOVE THE DECK.
7. THE AIR VENT MUST BE OPERABLE THROUGH A SIDE OR DISCHARGE GRILLE.
COVERED FUNNEL
OPEN EXPANSION TANK
GAGE GLASS
FLOAT VALVE
OVERFLOW
VALVE (LOCK SHIELD)
MAKE-UP
WEATHER BULB (FIG. 6)
WATER TO SYSTEM
MASTER
SUBMASTER
PNEU. VALVE
FLOAT VENT
RELIEF VALVE
BY-PASS
STEAM
CONVERTER
AIR ELIM.
NEEDLE VALVE
GRAVITY COND. RETURN
DIRT POCKET
ZONE RETURNS
LOCK-SHIELD BAL. VALVE
TYPICAL ZONE
LOCK-SHIELD
DRAIN CONN.
INITIAL FILL. CONN.
GLOBE VALVE
GATE VALVE
REMOTE THERMOMETER
PRESSURE GAGE
INDICATING, CONSTANT PRES. REGULATOR
CONTROL AIR MAIN
"Y" STRAINER WITH BLOW-OFF DRAIN CONN.
PNEUMATIC CONTROL VALVE WITH POSITIVE POSITIONER
COMBINATION FLOAT AND THERMOSTATIC TRAP
NOTE : ALL REGULATORS , GAGES, THERMOSTATS, THERMOMETERS, AND CONTROLS SHOULD BE PANEL MOUNTED.