GS-0114

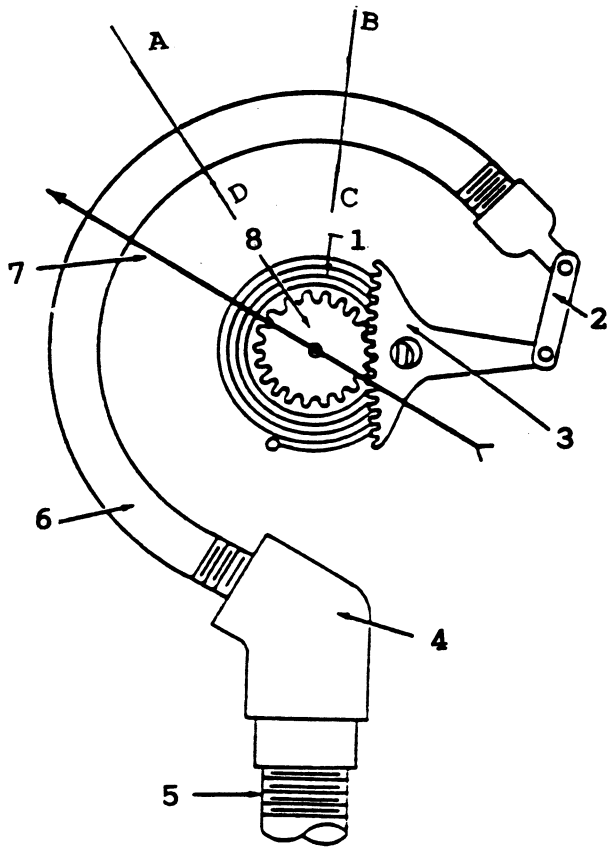

GS-0115

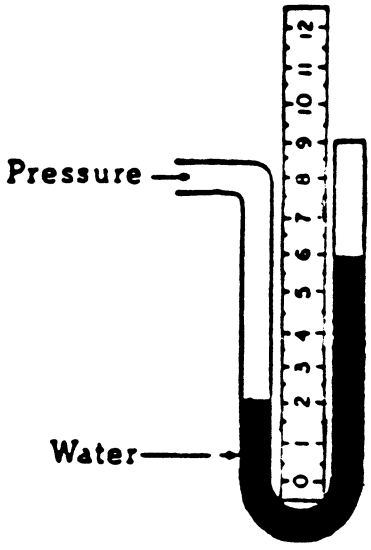

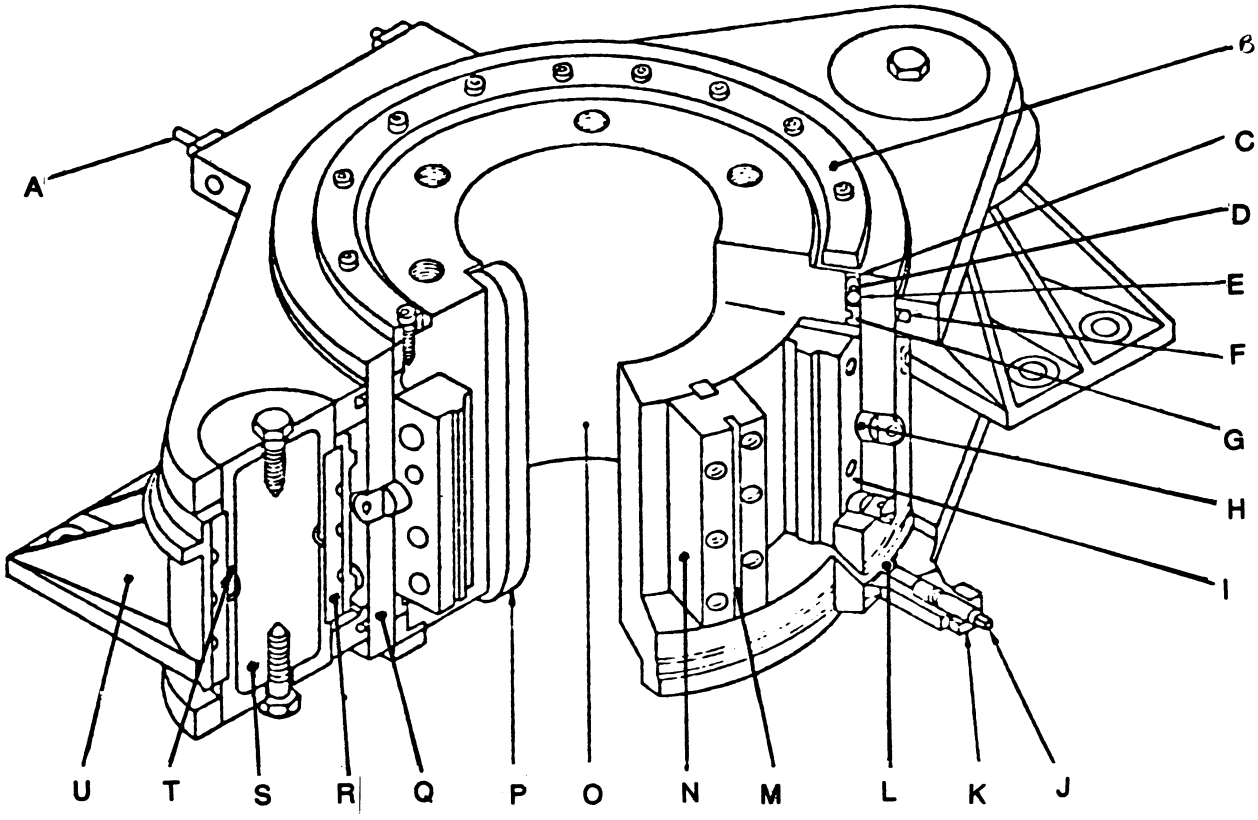
A
B
C
D
E
F
G
H
I
J
K
L
M
N
O
P
Q
R
S
T
U

GS-0117

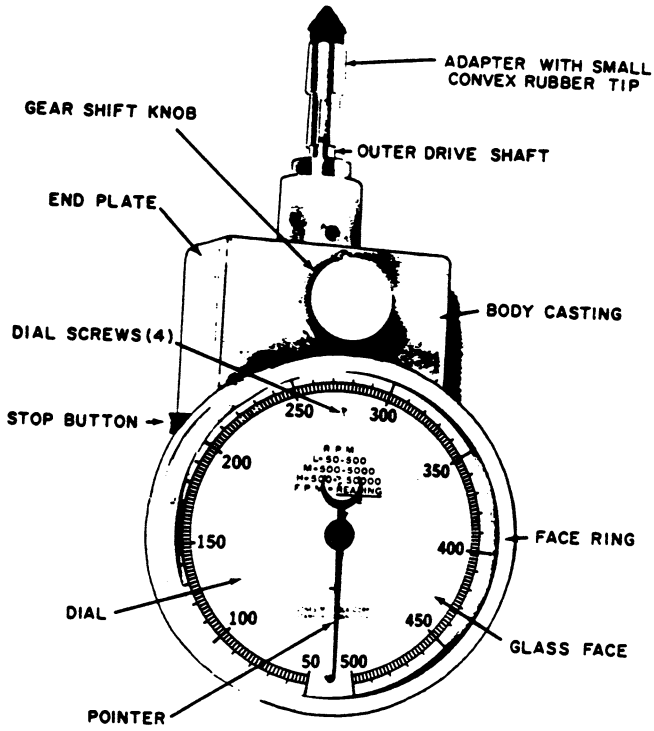

GS-0118

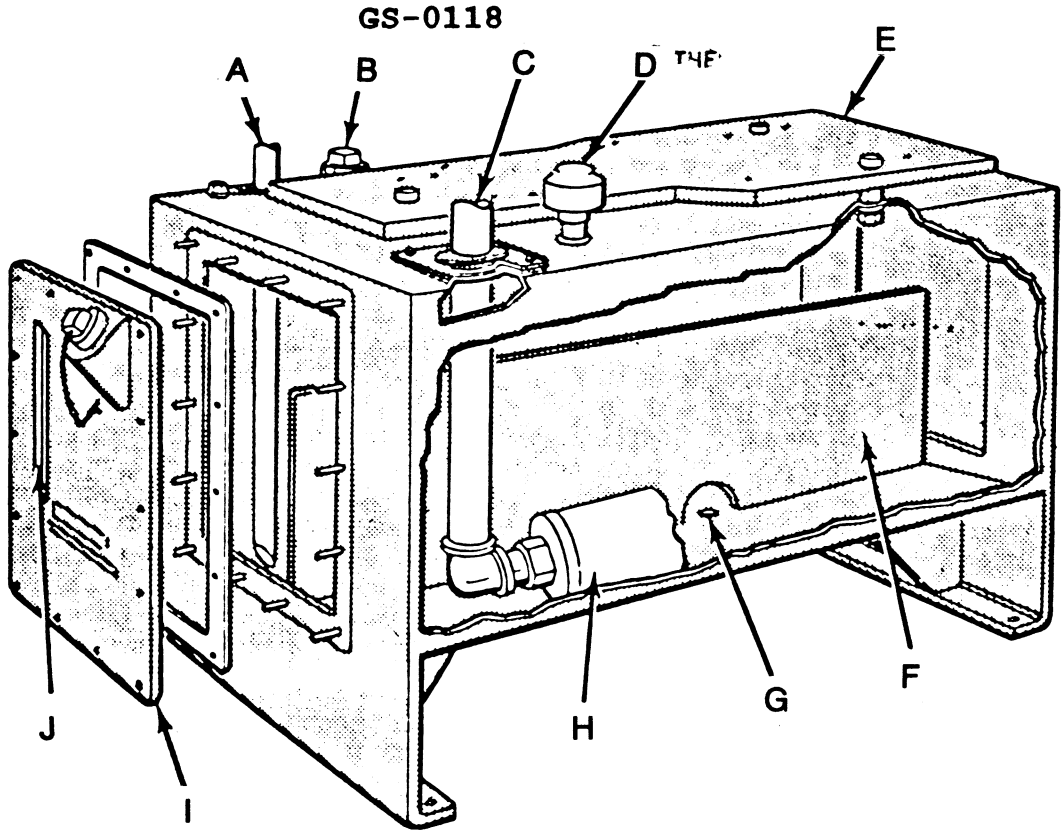

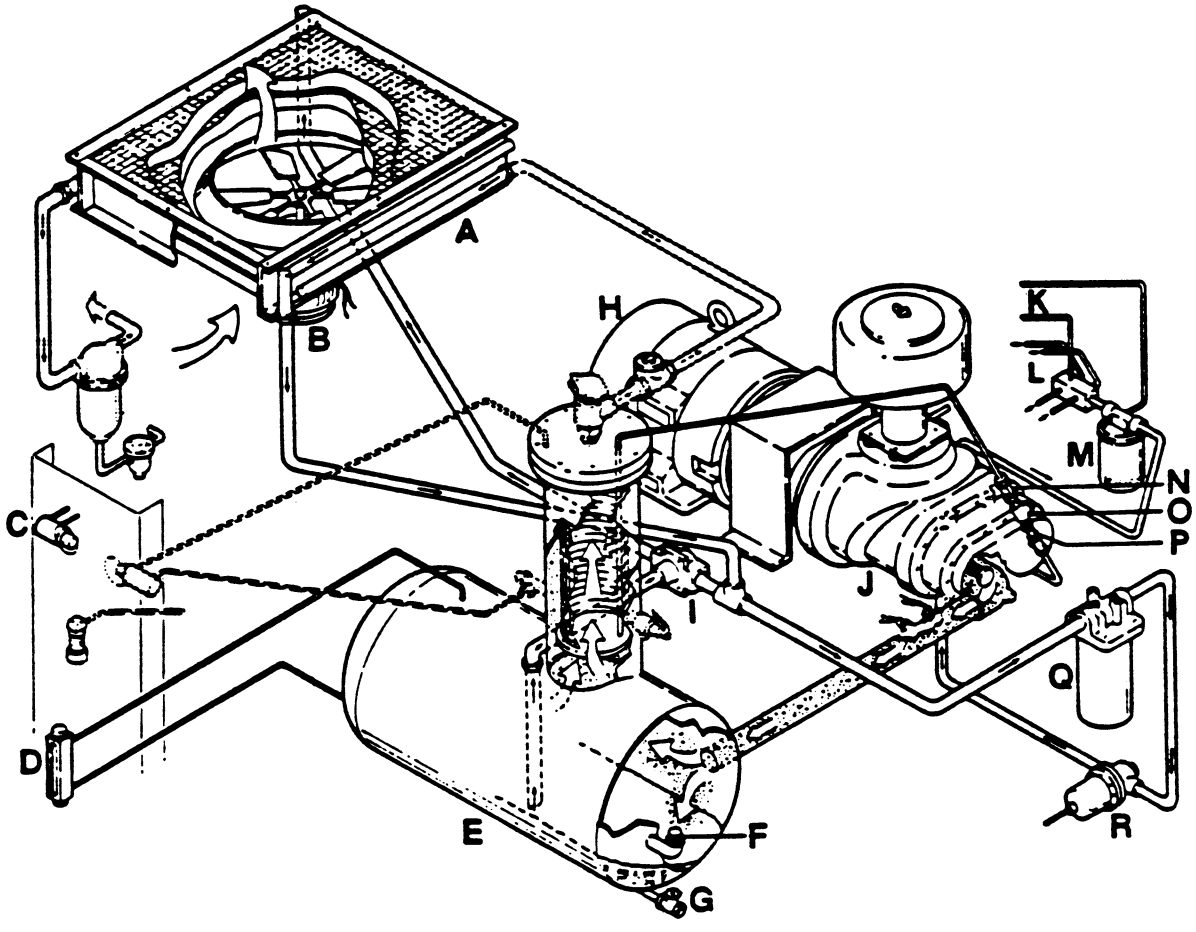

A – FLUID COOLER (TOP)

B – FAN MOTOR

C – BEARING FILTER MAINTENANCE INDICATOR

D – FLUID LEVEL SIGHT GLASS

E – RECEIVER SUMP

F – FLUID FILL CAP

G – FLUID DRAIN

H – MOTOR

I – THERMAL VALVE

J – COMPRESSOR UNIT

K – TO BEARING FILTER MAINTENANCE INDICATOR

L – FLUID MANIFOLD TO COMPRESSOR BEARINGS

M – BEARING FLUID FILTER

N – FLUID RETURN LINE SIGHT GLASS

O – RETURN LINE STRAINER

P – ORIFICE

Q – MAIN FLUID FILTER

R – FLUID STOP VALVE

(COURTESY OF SULLAIR CORPORATION)

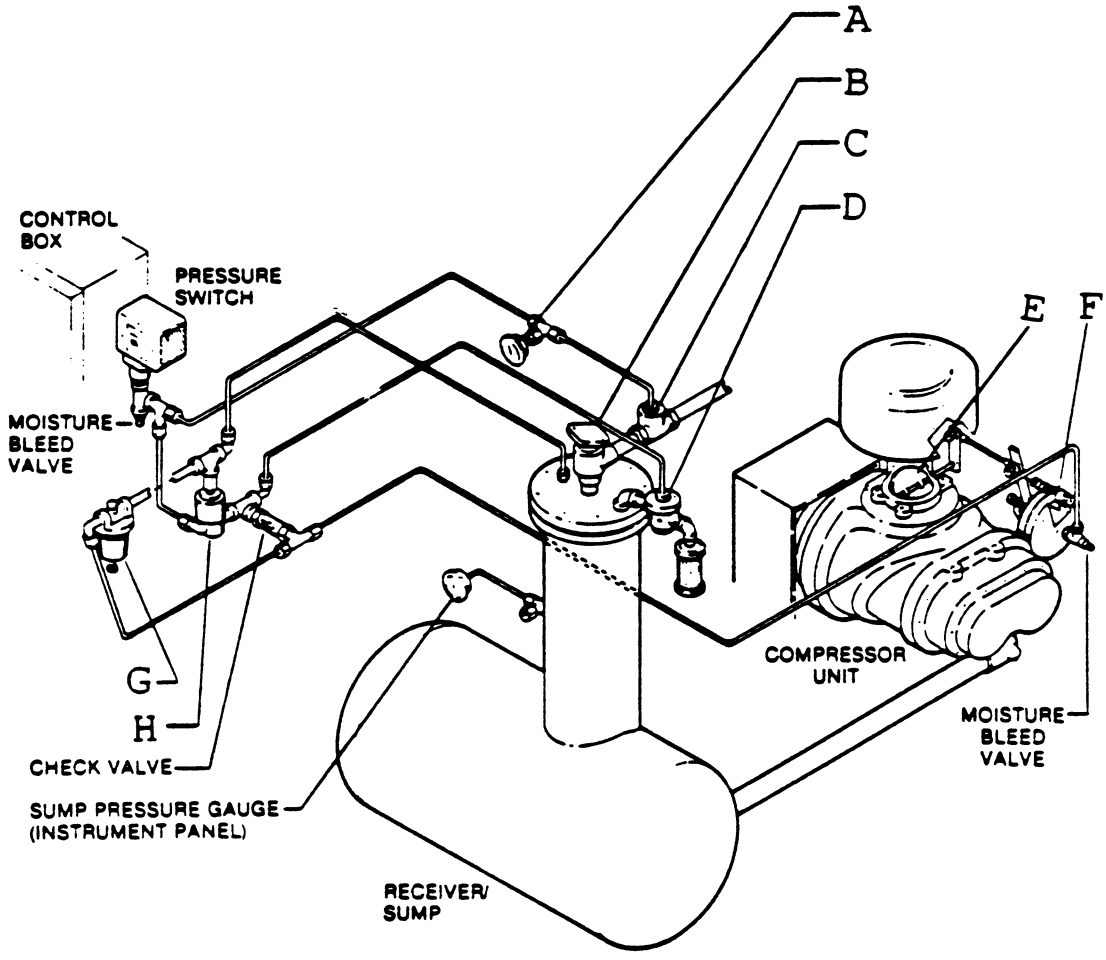

(COURTESY OF SULLAIR CORP.)

A

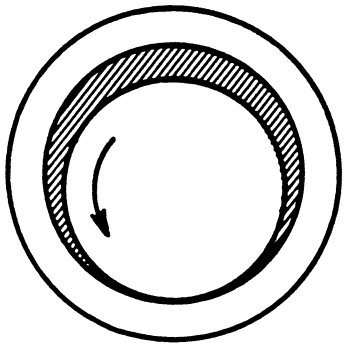

B

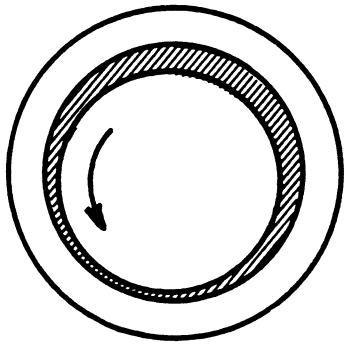

C

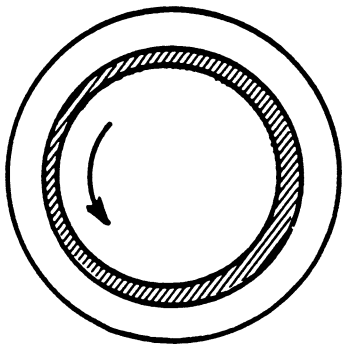

D

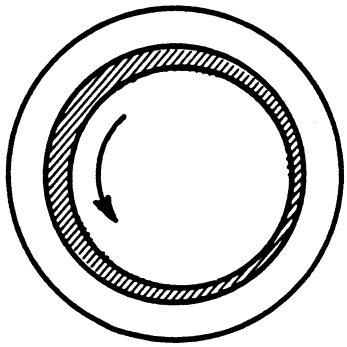

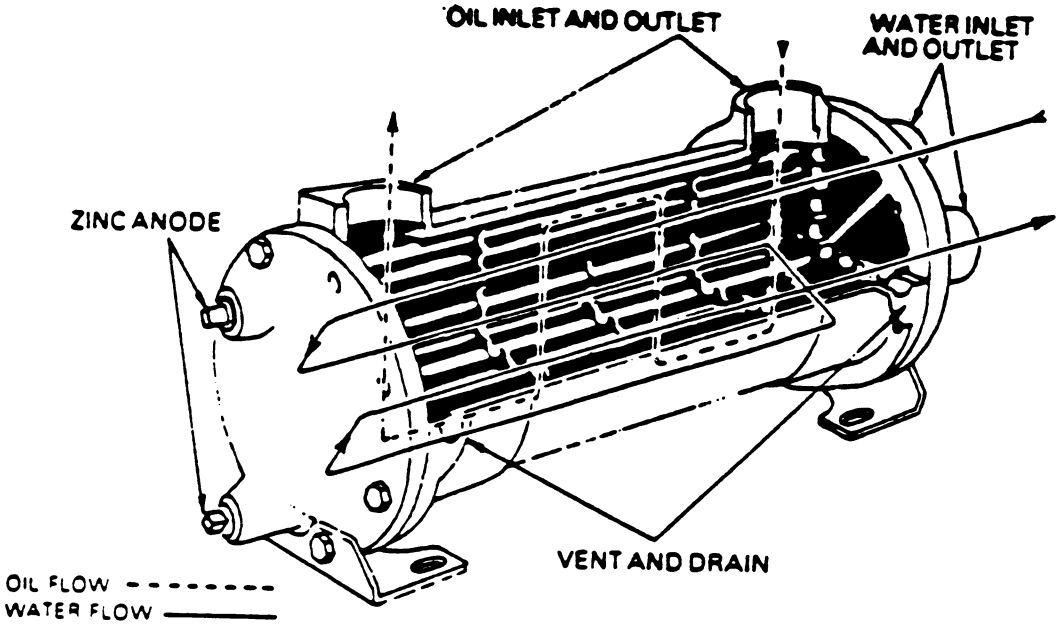
OIL INLET AND OUTLET
WATER INLET AND OUTLET
ZINC ANODE
VENT AND DRAIN
OIL FLOW
WATER FLOW

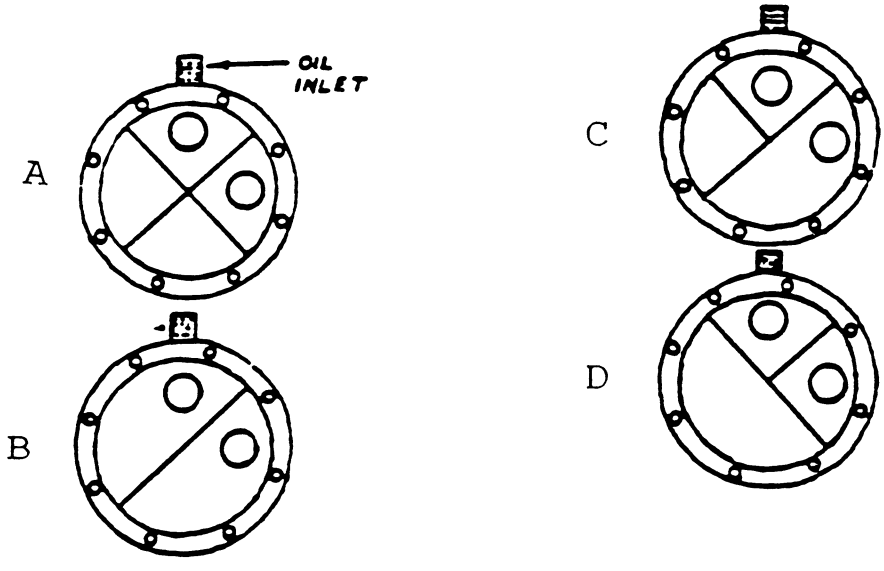
OIL INLET
A
B
C
D

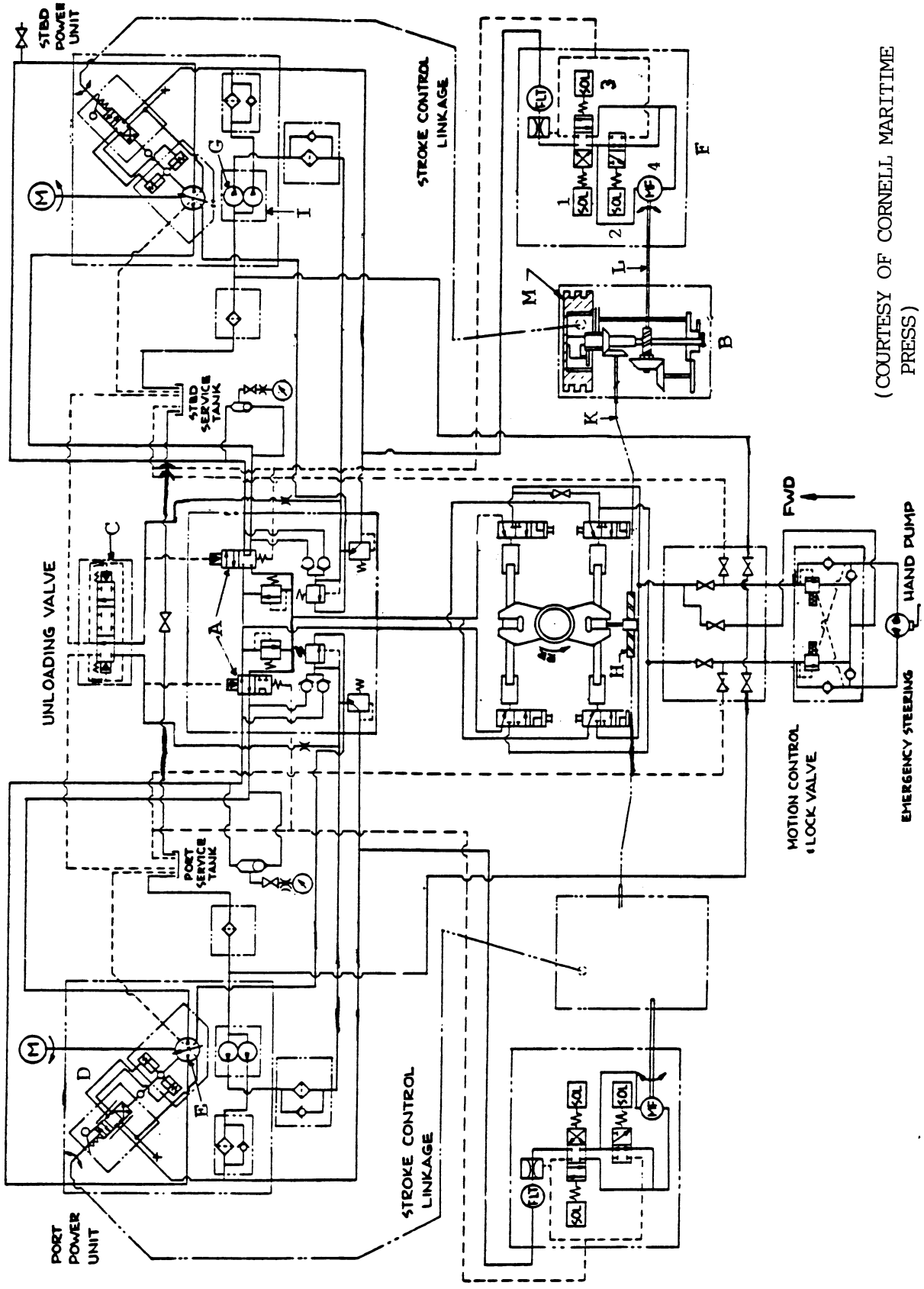

(COURTESY OF CORNELL MARITIME PRESS)

GS-0124

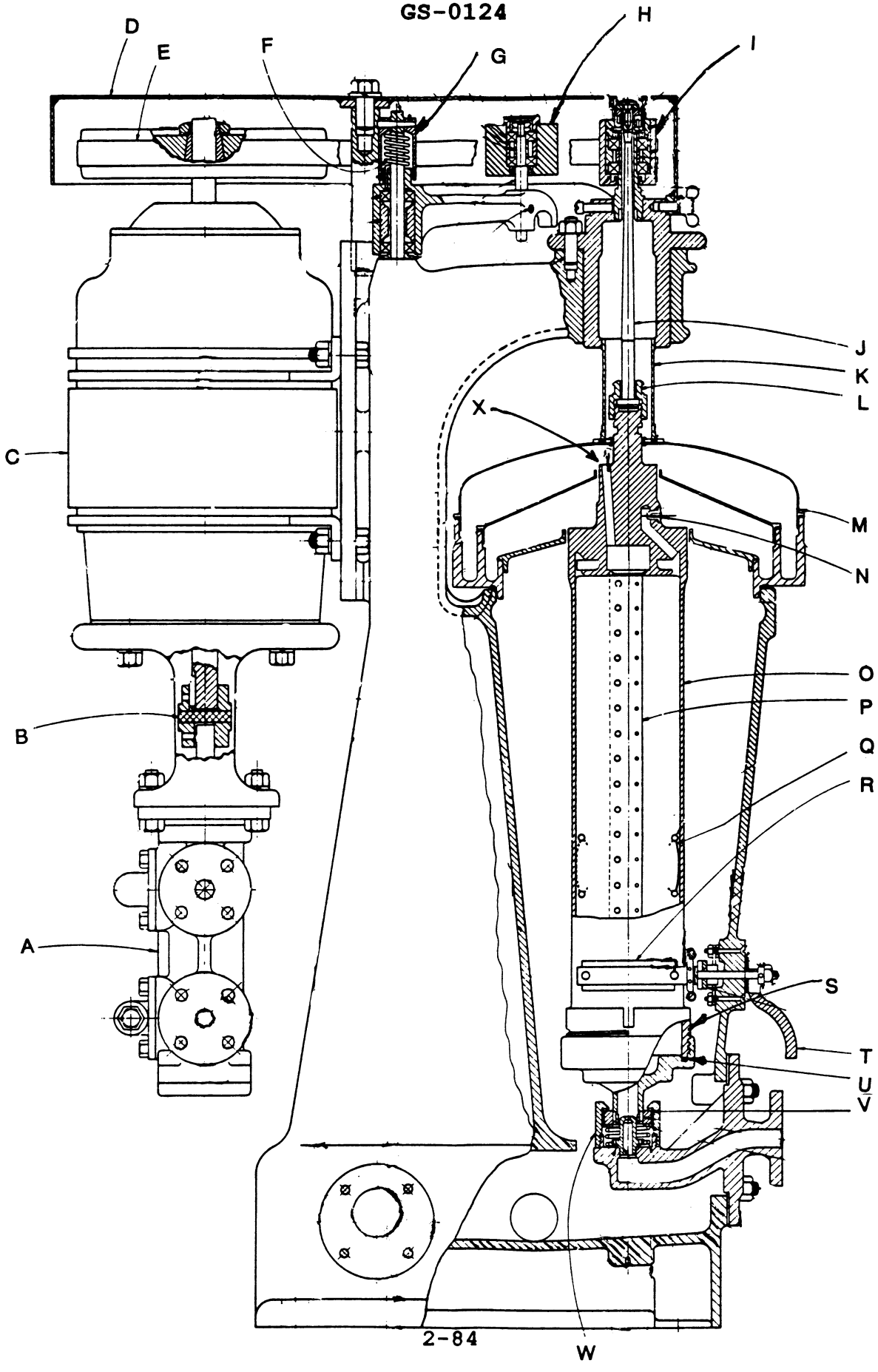

GS-0125

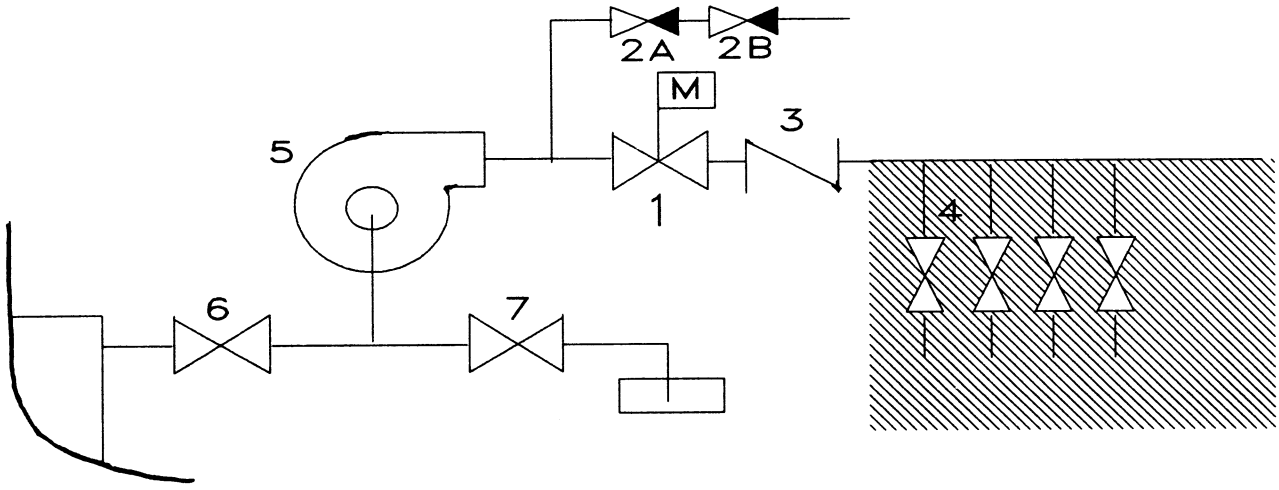

GS-0126

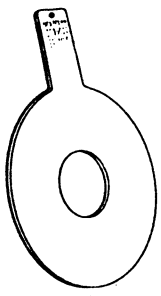

FIG. A

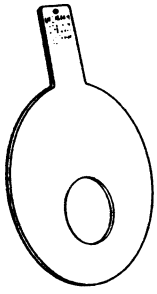

FIG. B

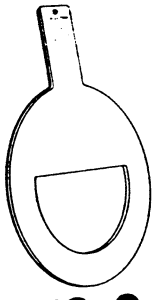

FIG. C

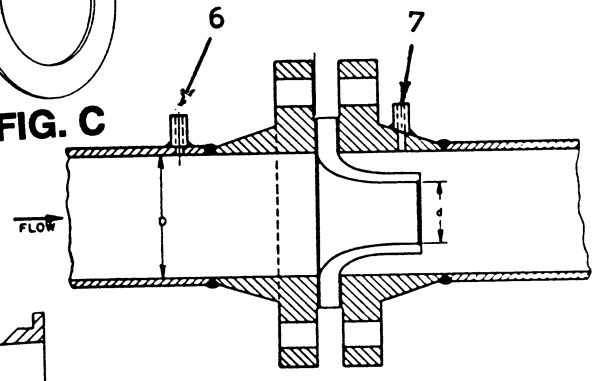

FIG. D

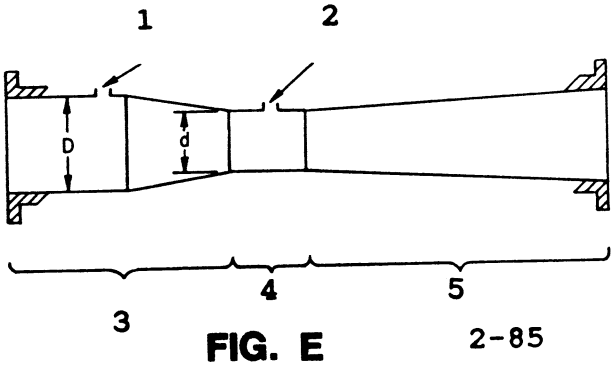

FIG. E

2-85

GS-0127

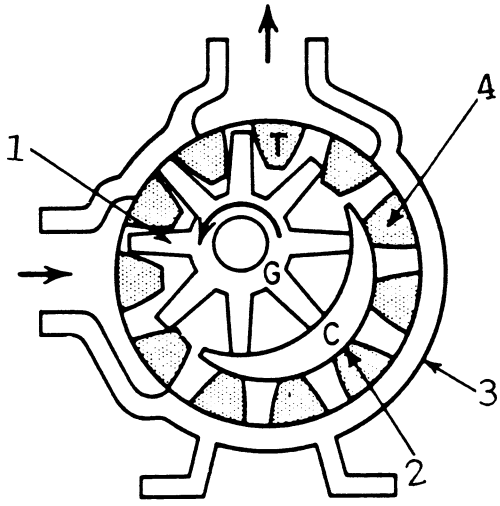

GS-0128

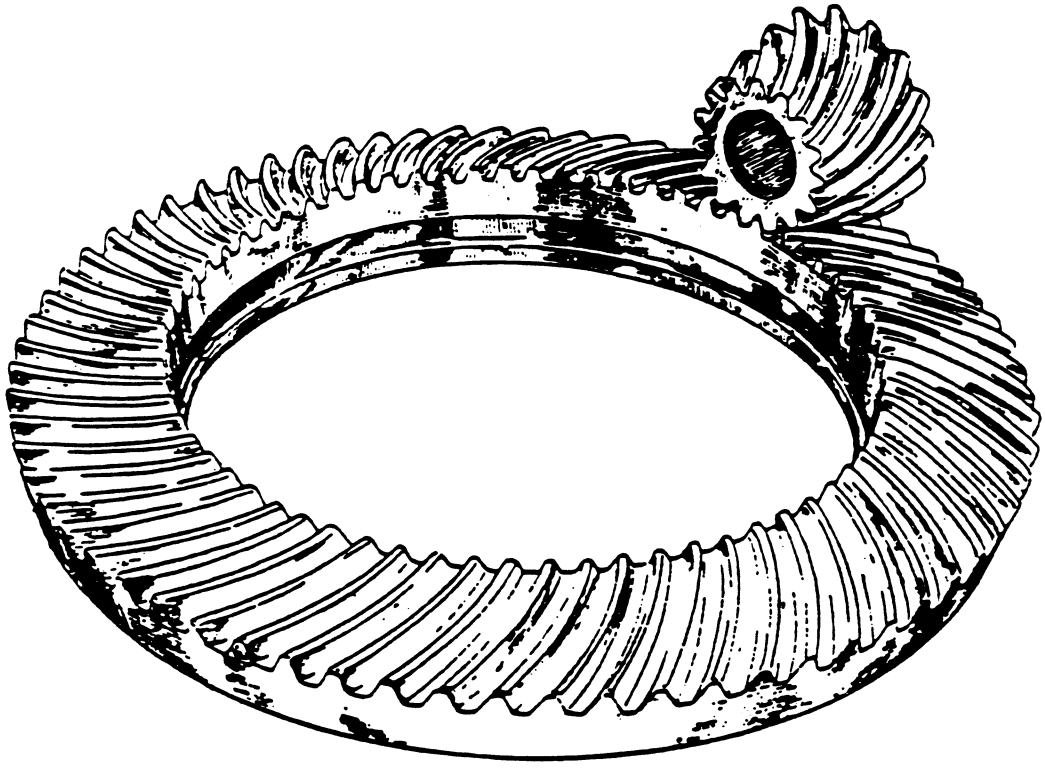

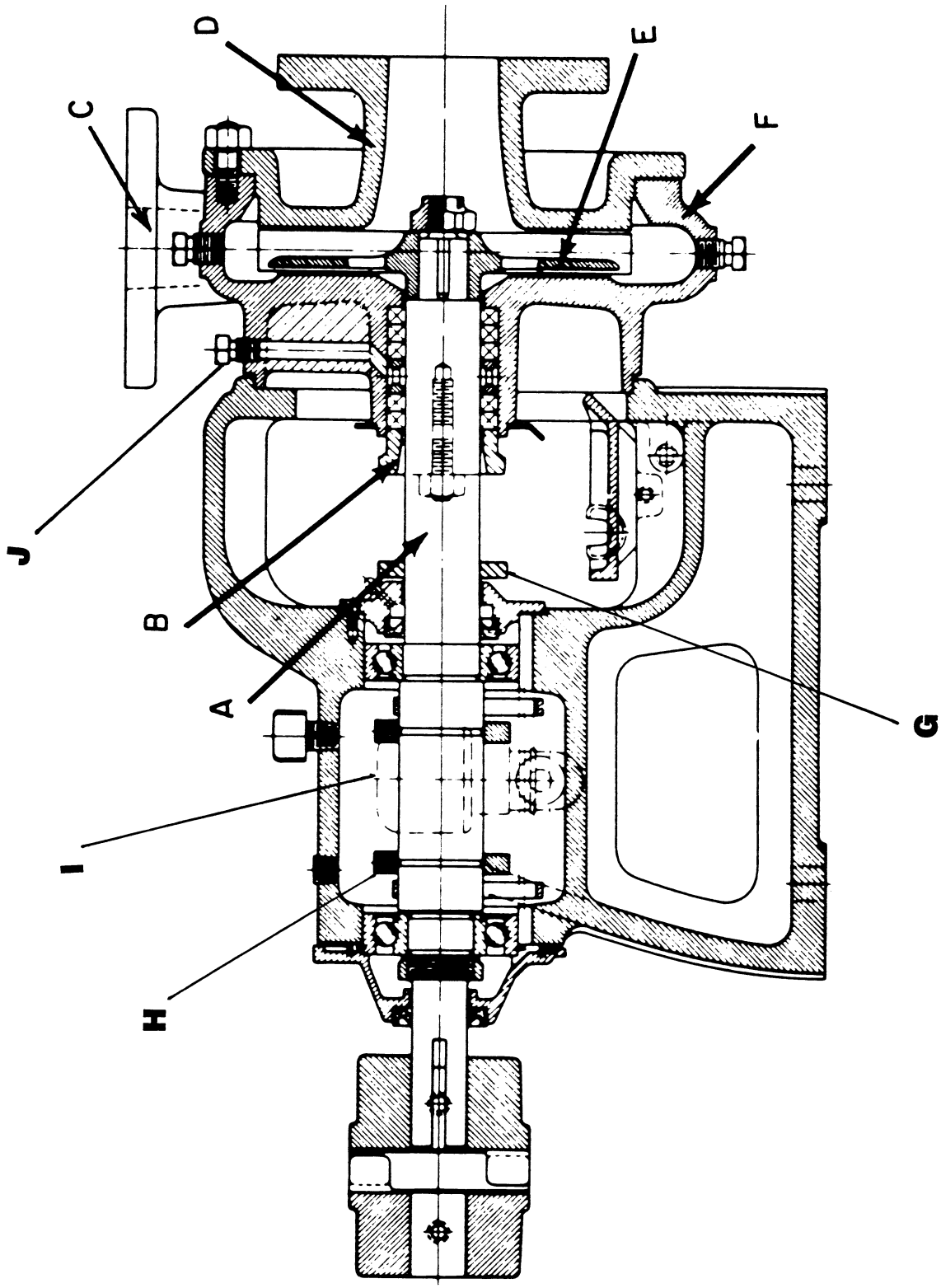
D
C
E
F
J
B
A
G
I
H

GS-0130

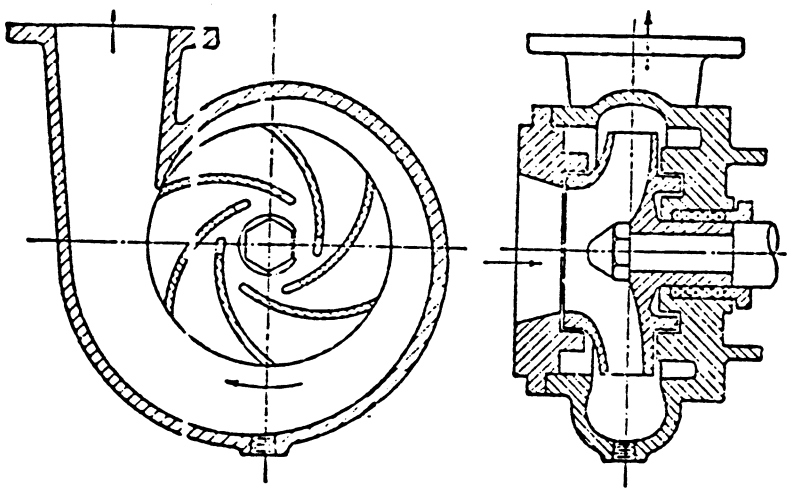

GS-0131

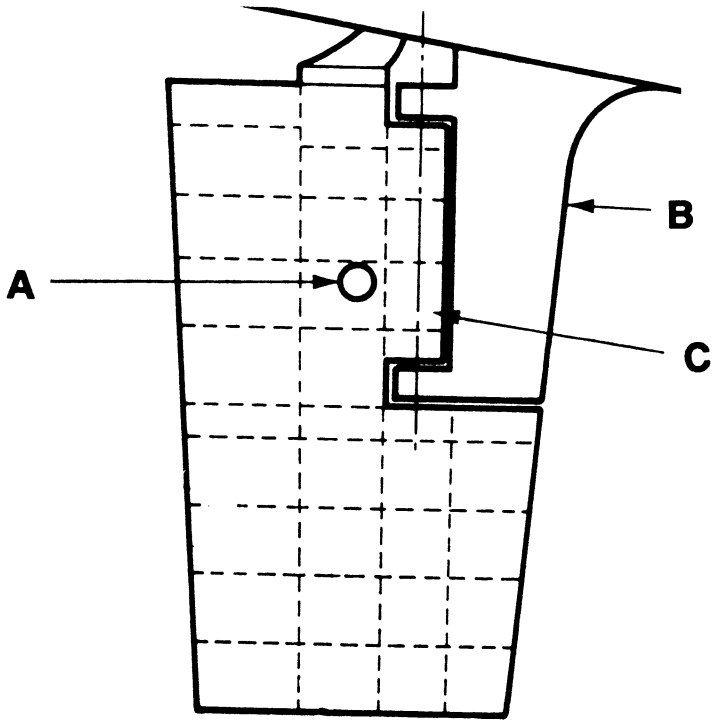

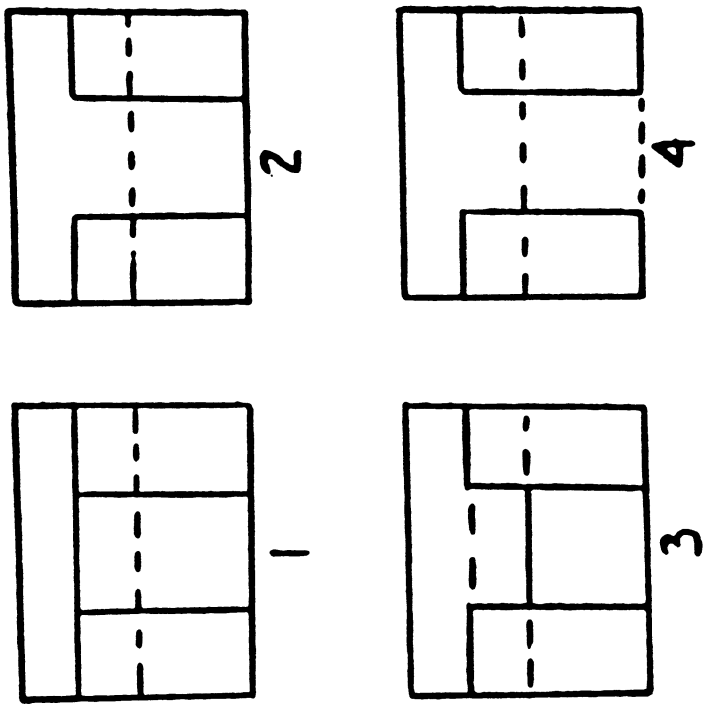
1
2
3
4

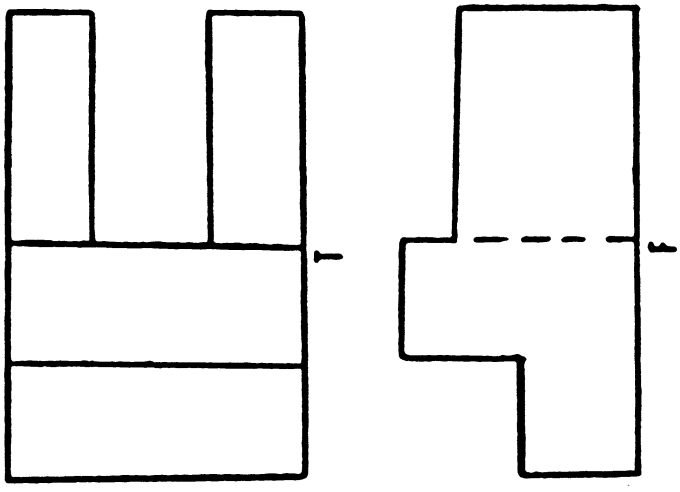
F
F

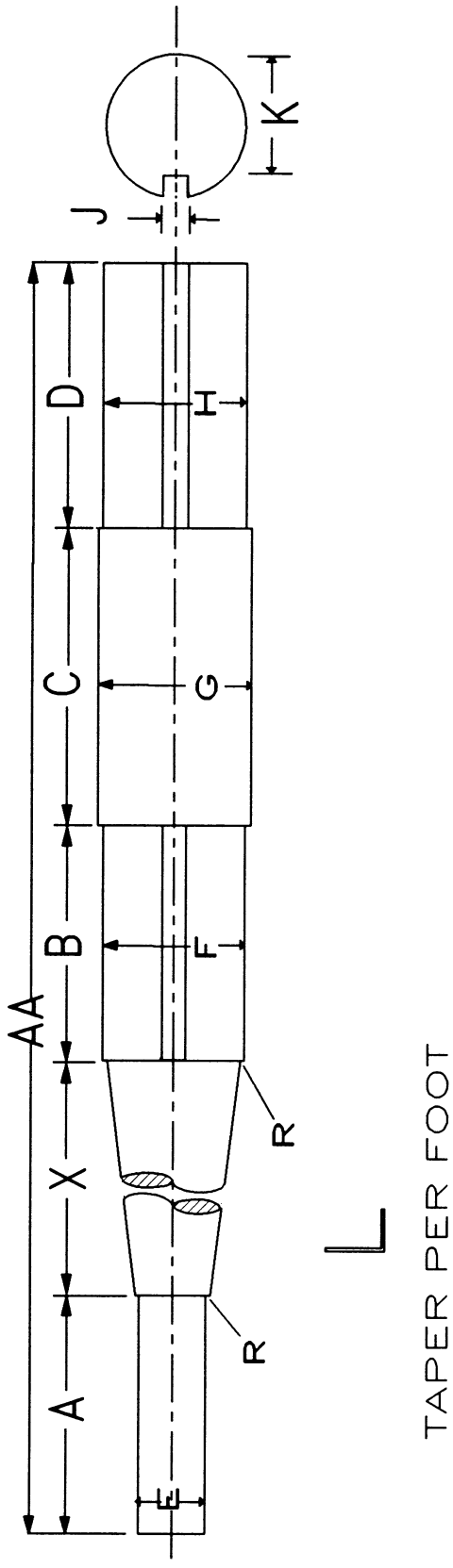
AA
A
X
B
C
D
E
F
G
H
J
K
R
R
L
TAPER PER FOOT