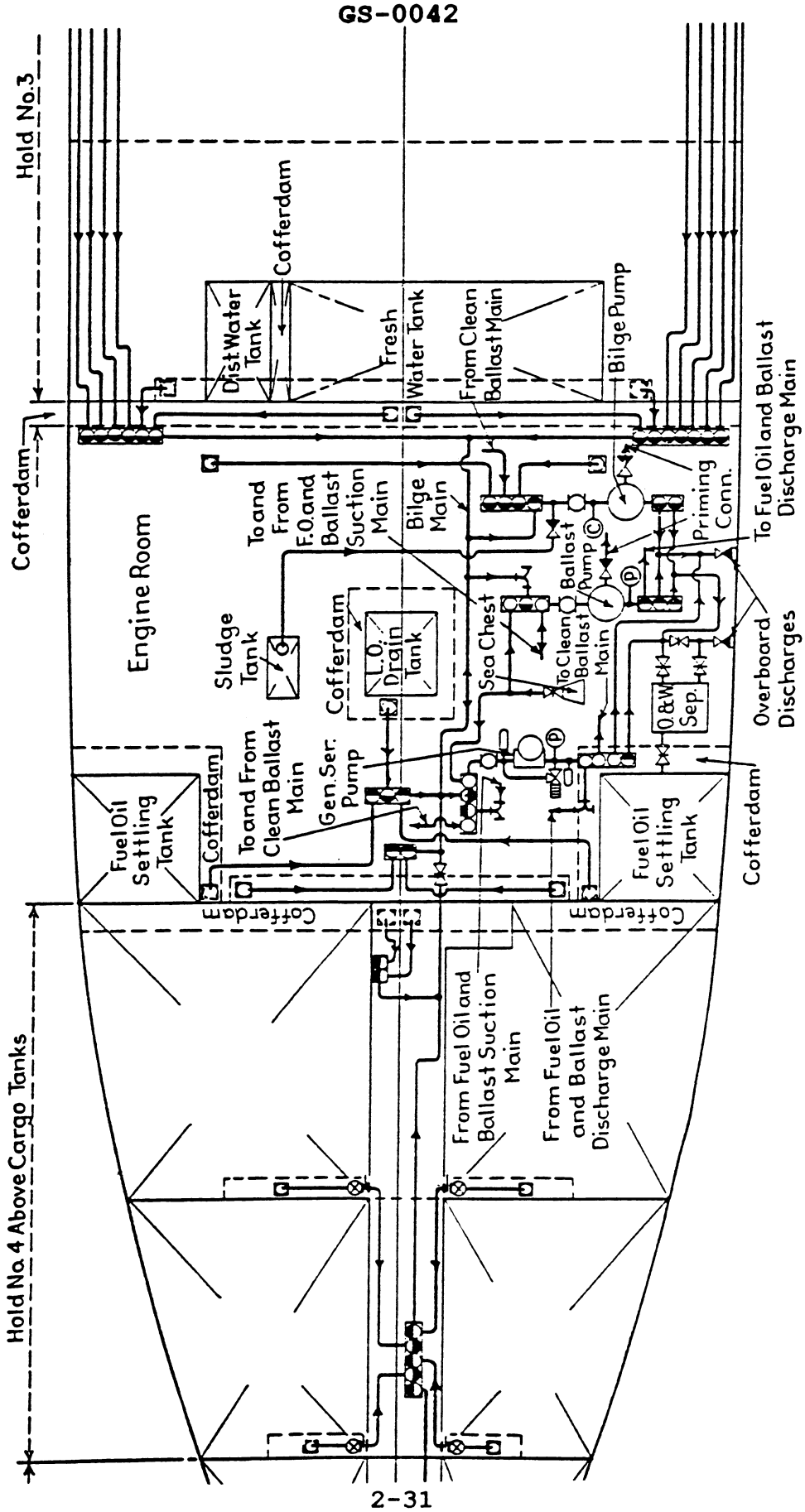
Hold No.3
Cofferdam
Dist.Water Tank
Cofferdam
Fresh Water Tank
From Clean Ballast Main
Bilge Pump
Cofferdam
Engine Room
To and From F.O.and Ballast Suction Main
Bilge Main
Priming Conn.
To Fuel Oil and Ballast Discharge Main
Sludge Tank
Cofferdam
L.O. Drain Tank
Sea Chest
Ballast Pump
To Clean Ballast Main
O.&W. Sep.
Overboard Discharges
Fuel Oil Settling Tank
Cofferdam
To and From Clean Ballast Main
Gen.Ser. Pump
Fuel Oil Settling Tank
Cofferdam
Cofferdam
Cofferdam
From Fuel Oil and Ballast Suction Main
From Fuel Oil and Ballast Discharge Main
Hold No. 4 Above Cargo Tanks

GS-0043

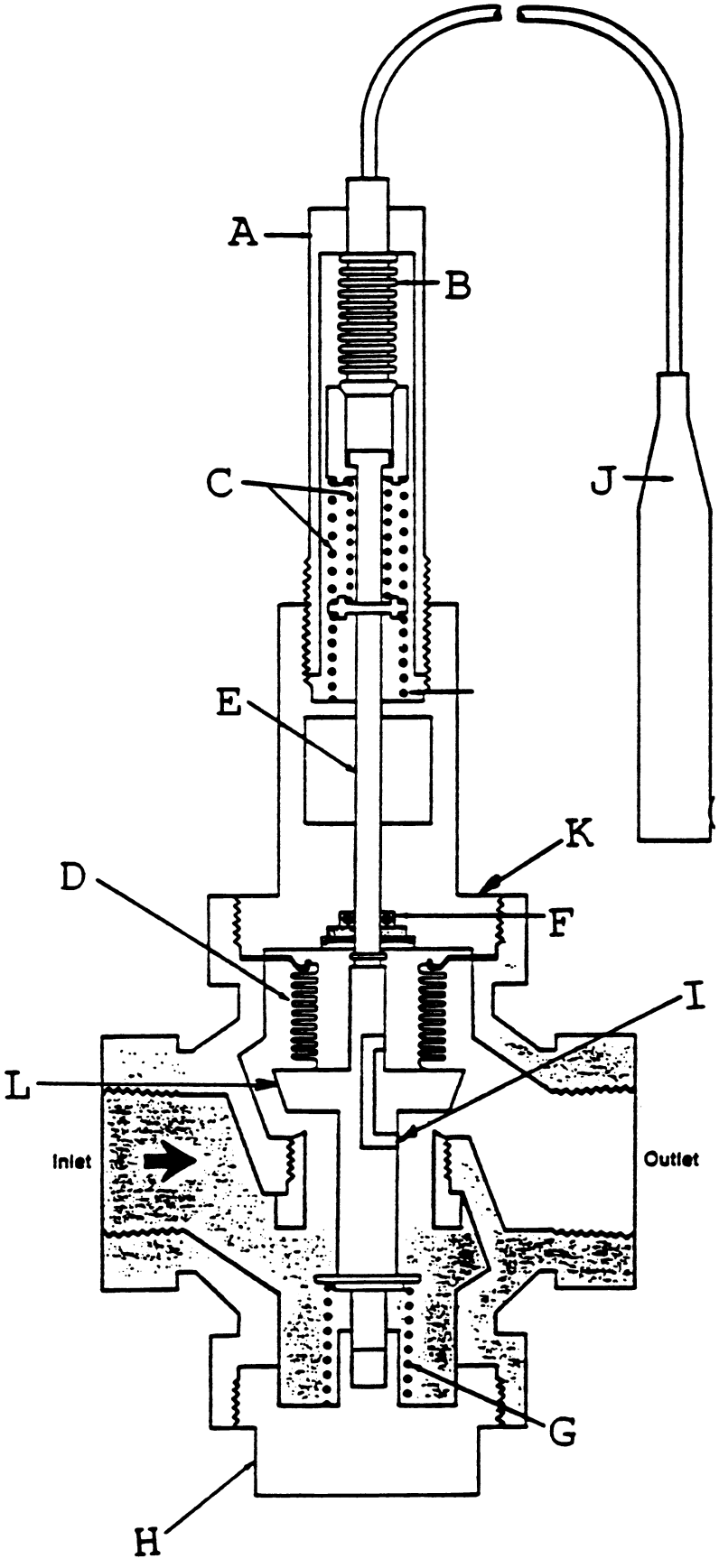

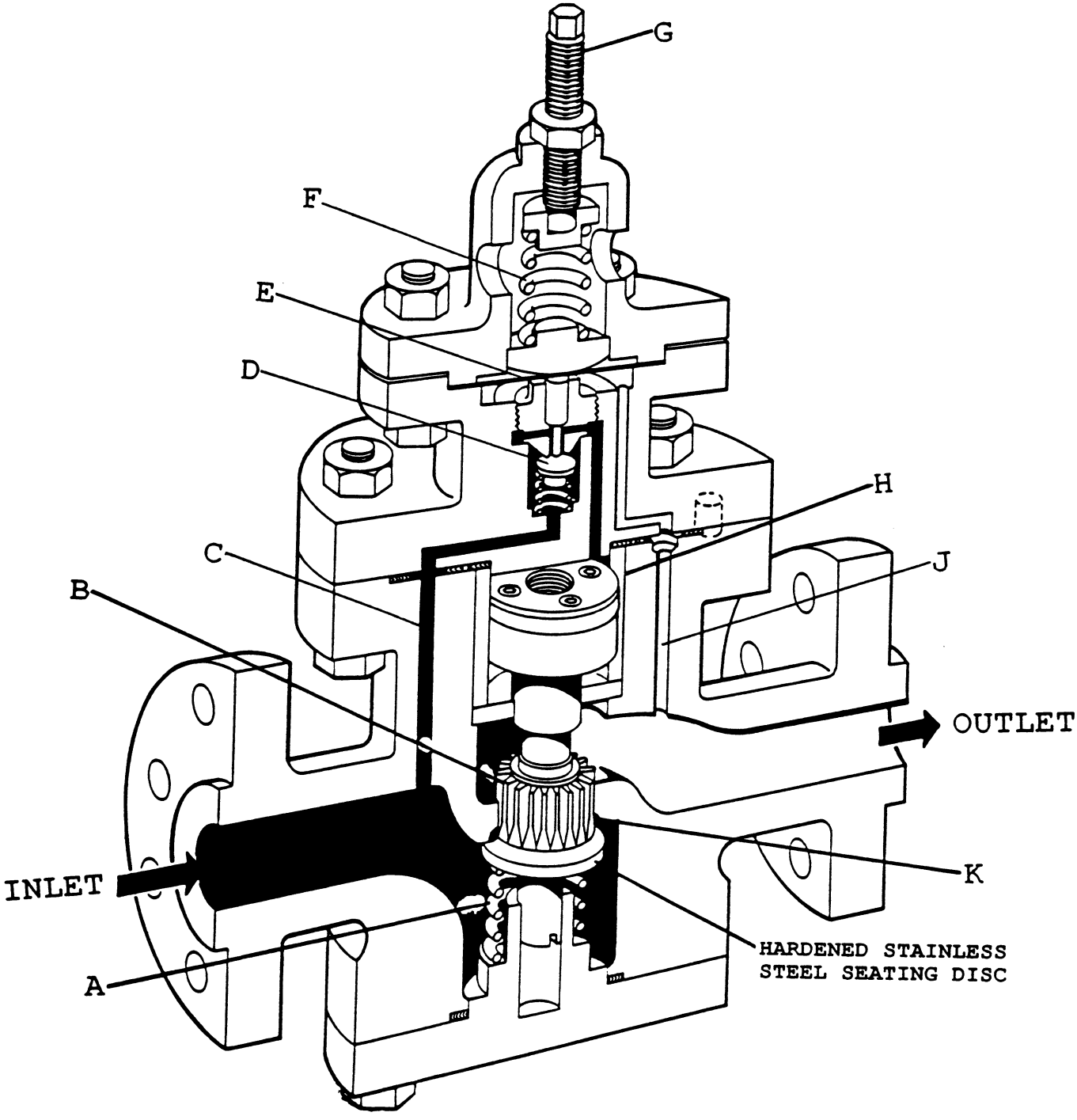
G
F
E
D
H
C
J
B
OUTLET
INLET
K
HARDENED STAINLESS
STEEL SEATING DISC
A

GS-0045

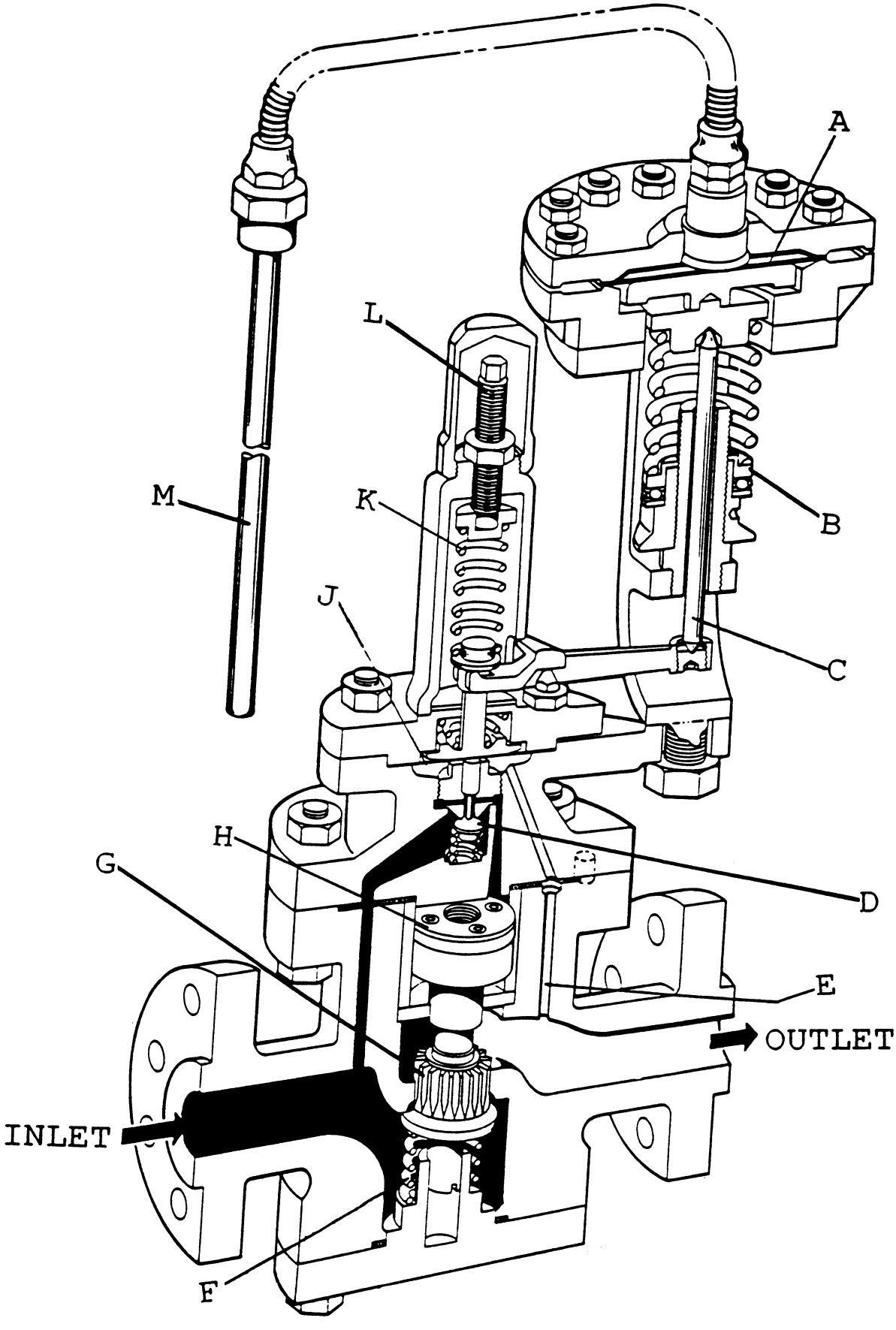

GS-0046

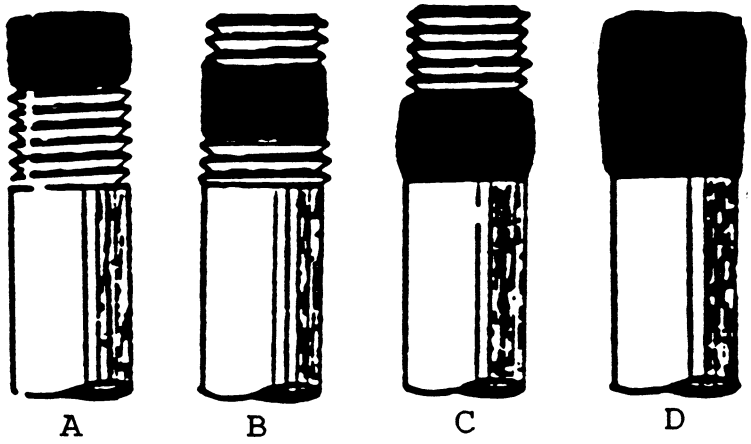

GS-0047

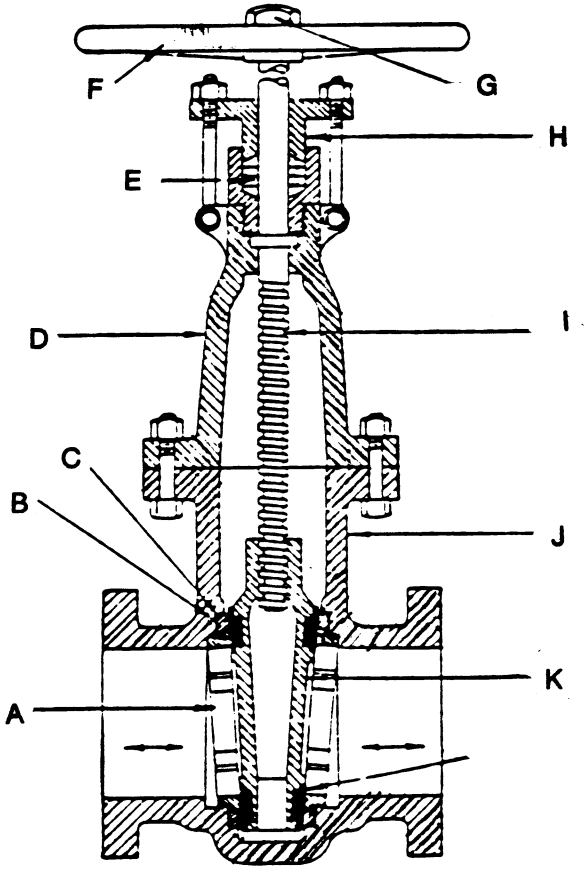

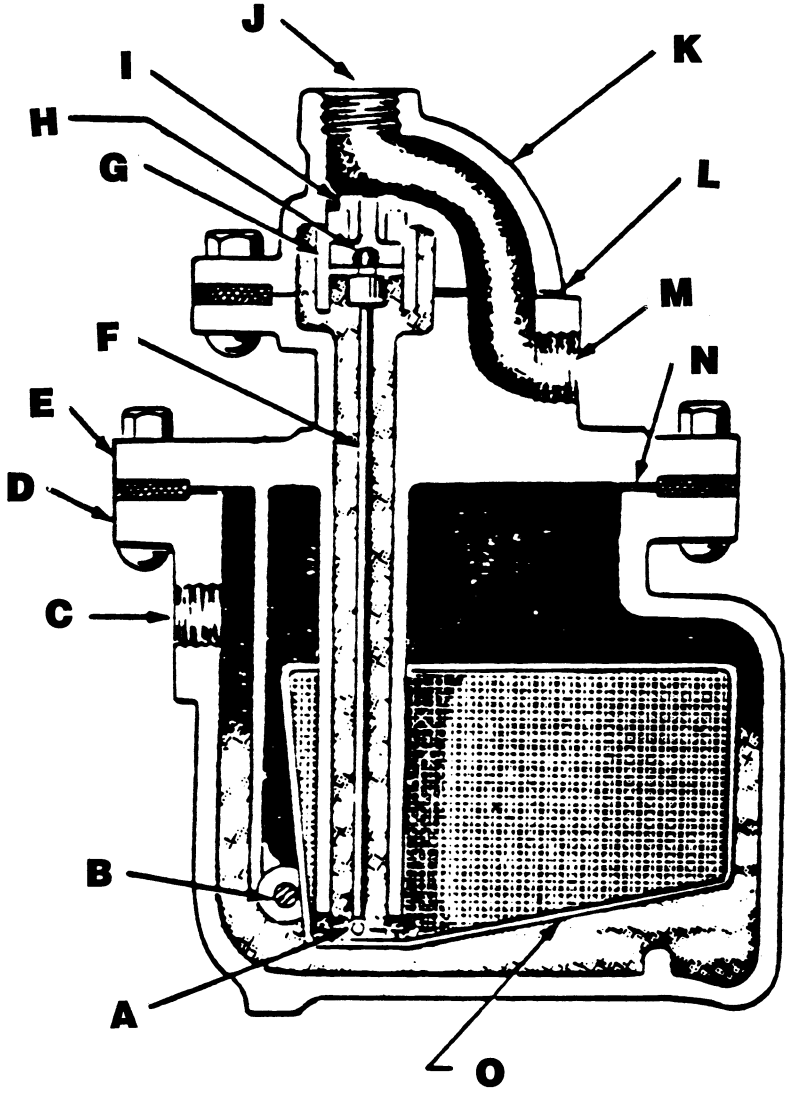
J
K
I
H
G
L
M
F
N
E
D
C
B
A
O

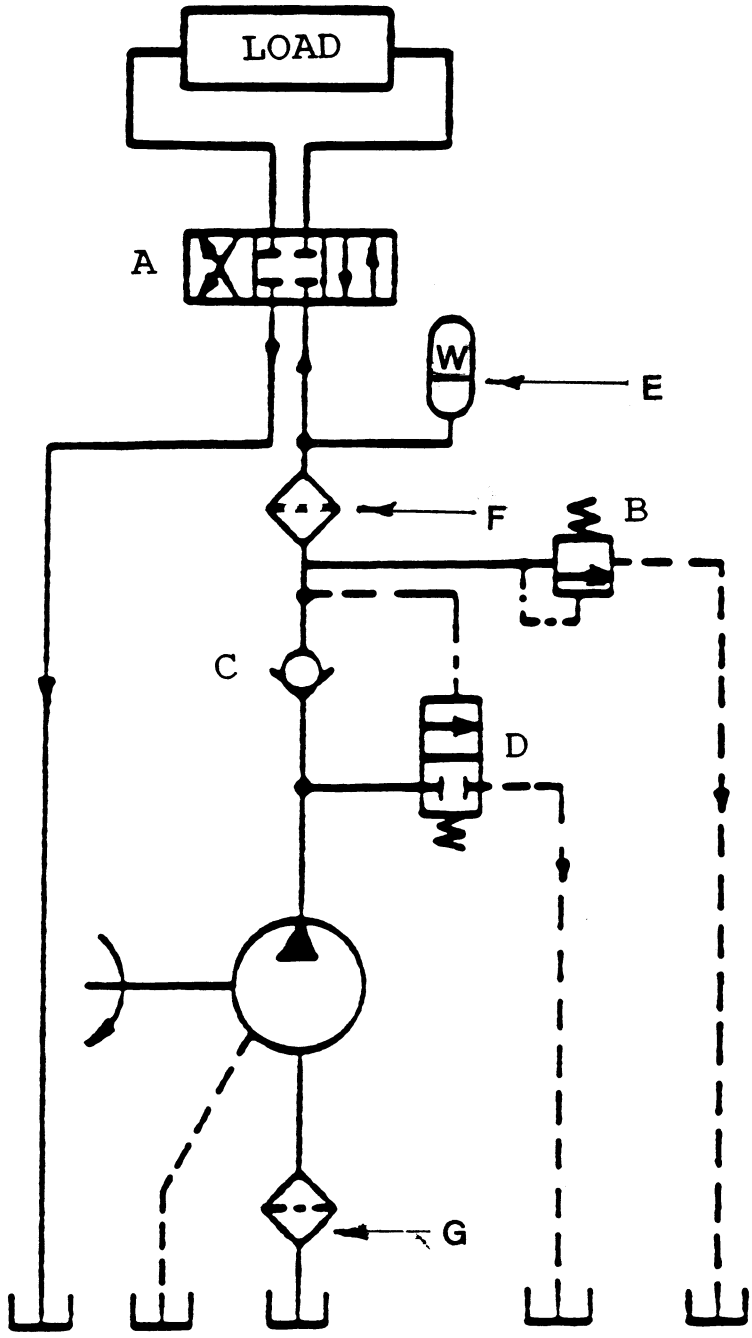
LOAD
A
W
E
F
B
C
D
G

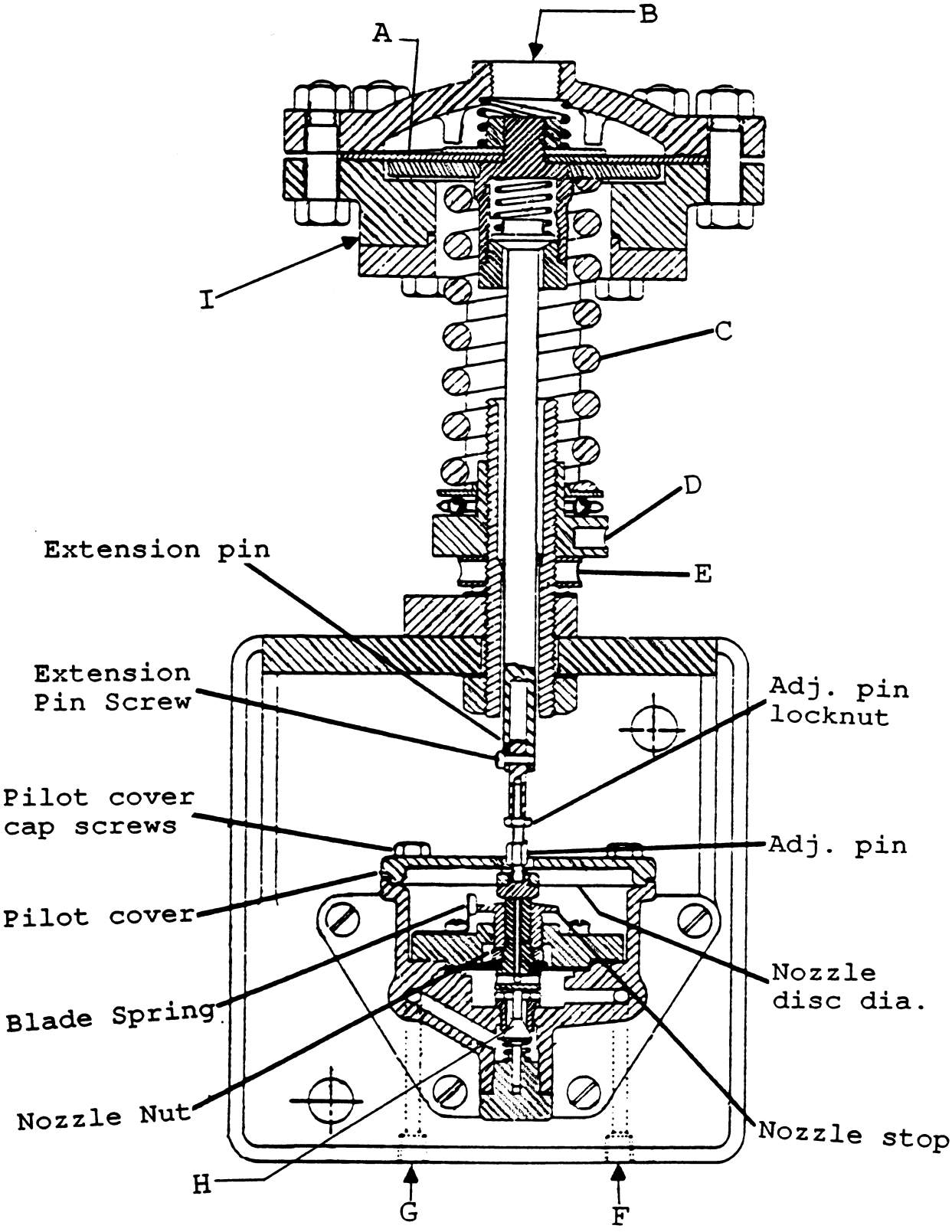
A
B
I
C
D
E
Extension pin
Extension
Pin Screw
Adj. pin
locknut
Pilot cover
cap screws
Adj. pin
Pilot cover
Nozzle
disc dia.
Blade Spring
Nozzle Nut
Nozzle stop
H
G
F

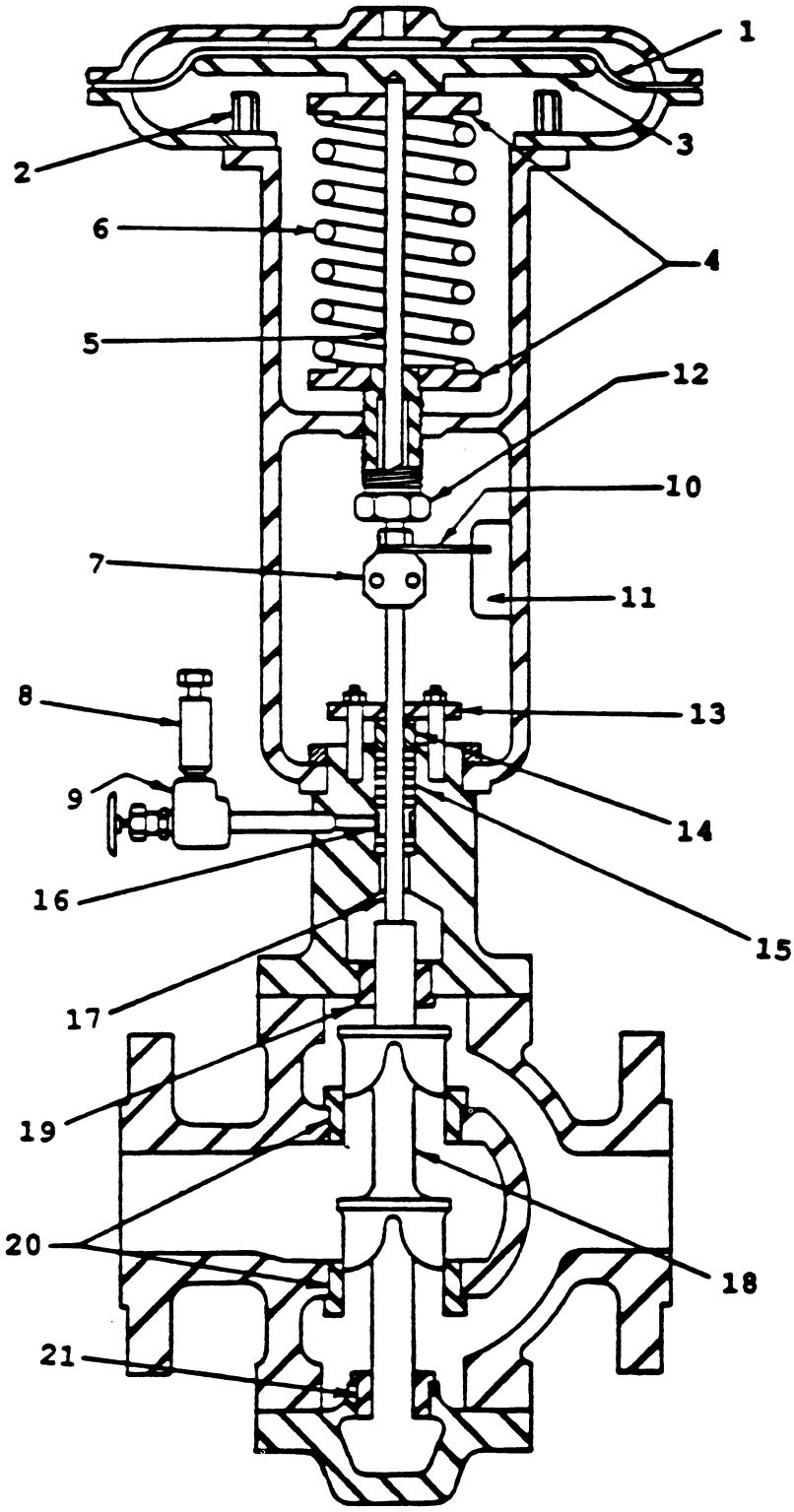
1
2
3
4
5
6
7
8
9
10
11
12
13
14
15
16
17
18
19
20
21

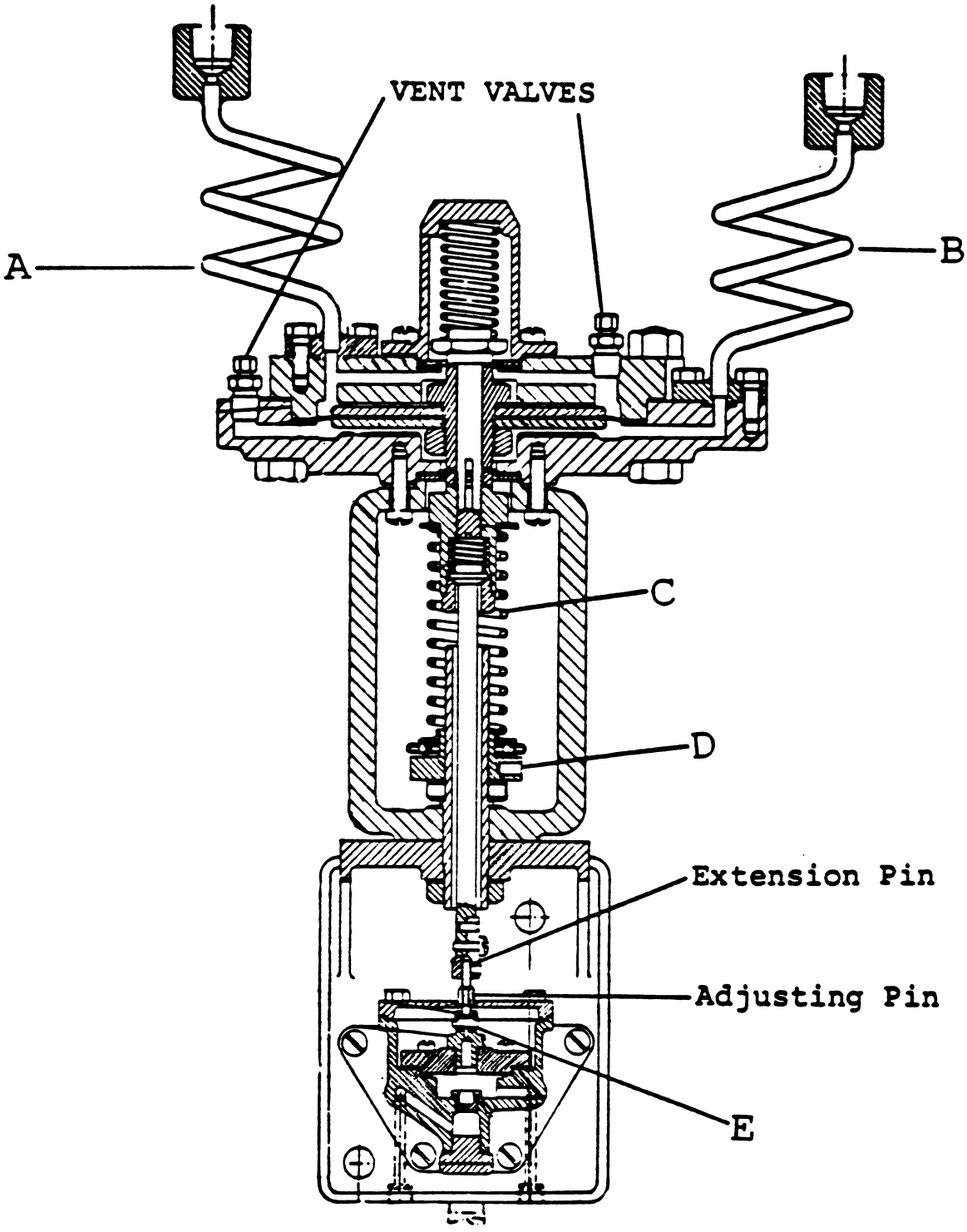
VENT VALVES
A
B
C
D
Extension Pin
Adjusting Pin
E

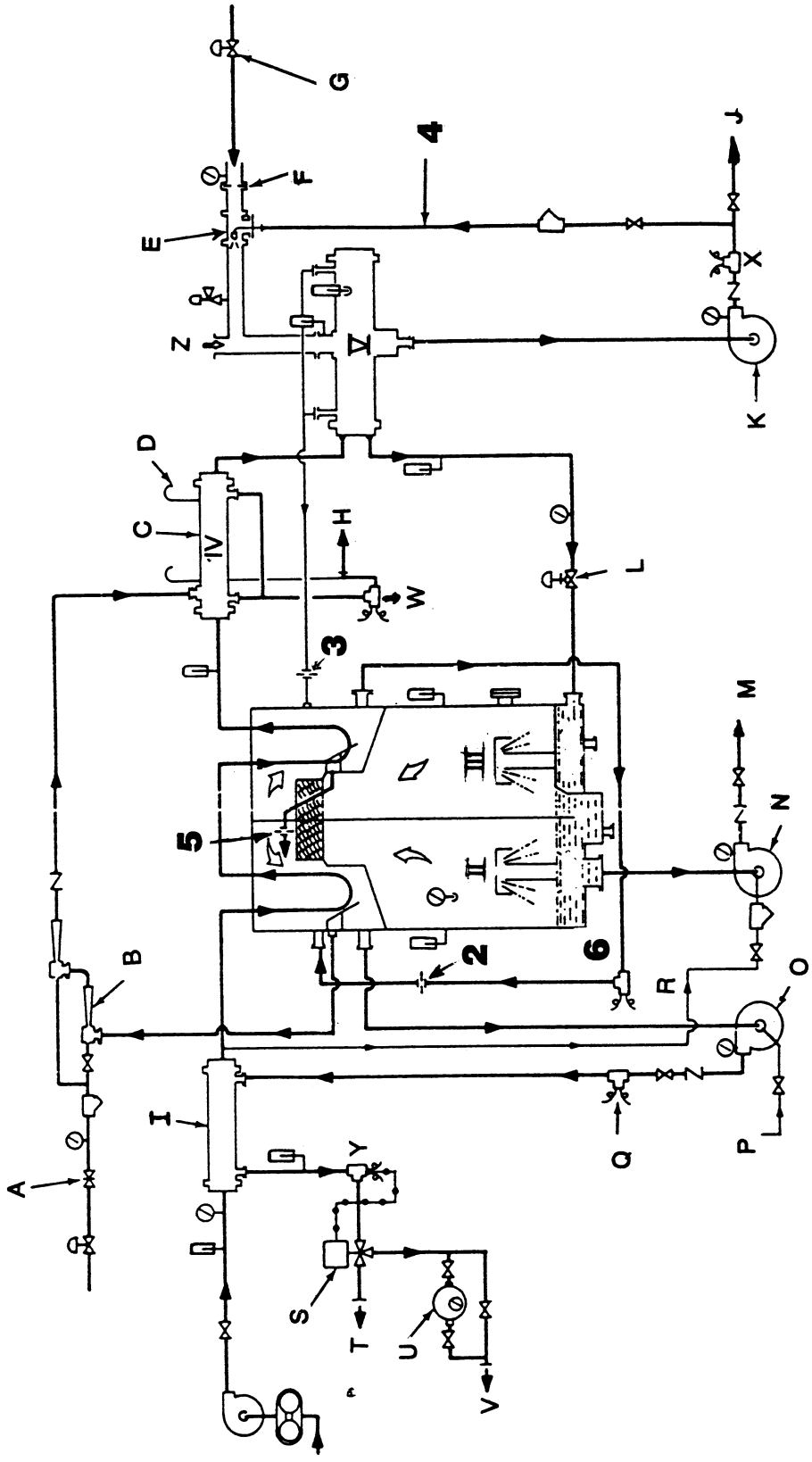
A
B
C
D
E
F
G
H
I
J
K
L
M
N
O
P
Q
R
S
T
U
V
W
X
Y
Z
2
3
4
5
6

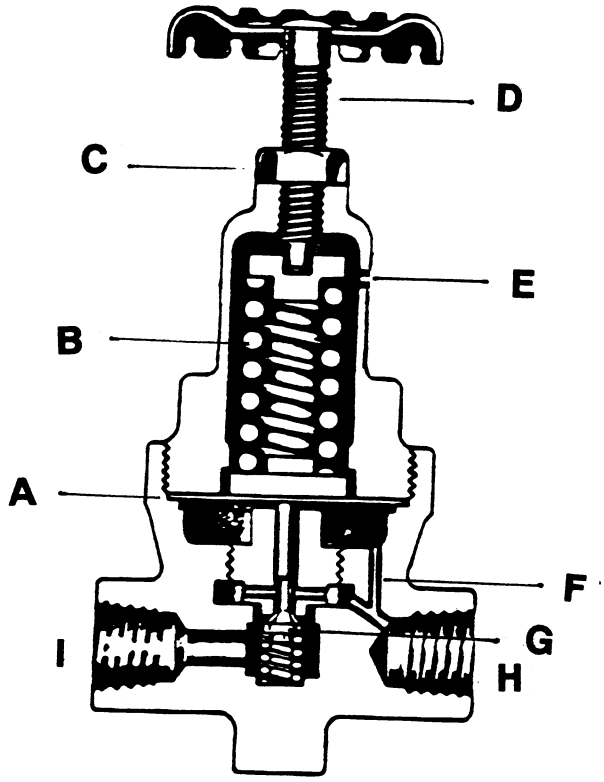
D
C
E
B
A
F
G
I
H

GS-0055

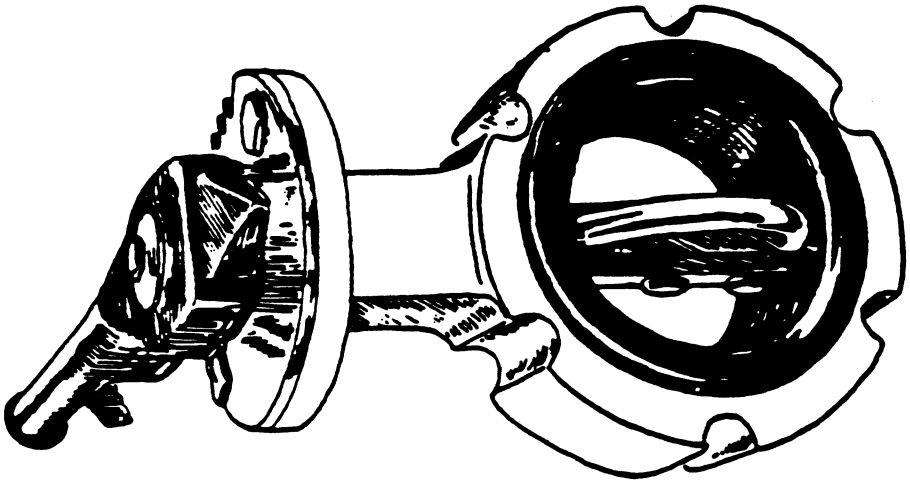

GS-0056

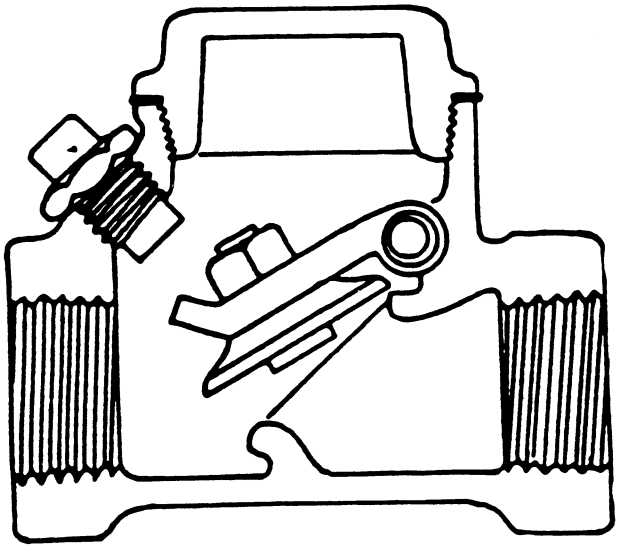

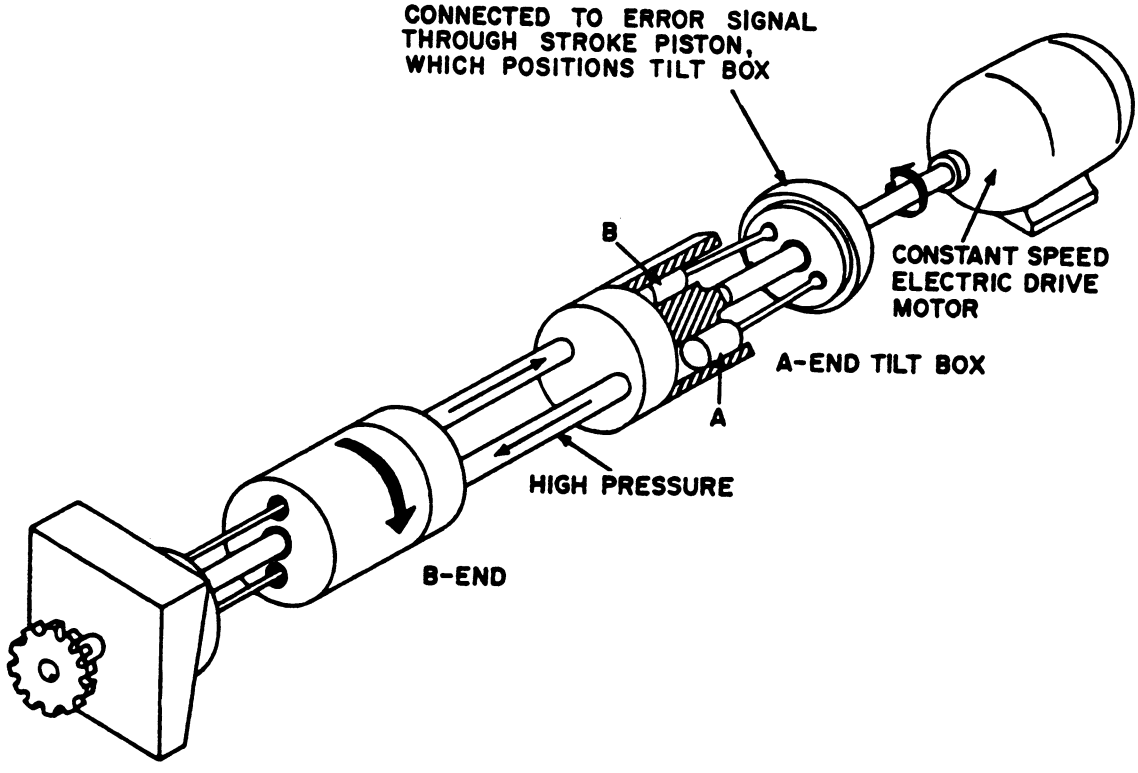
CONNECTED TO ERROR SIGNAL
THROUGH STROKE PISTON,
WHICH POSITIONS TILT BOX
B
CONSTANT SPEED
ELECTRIC DRIVE
MOTOR
A-END TILT BOX
A
HIGH PRESSURE
B-END

GS-0058

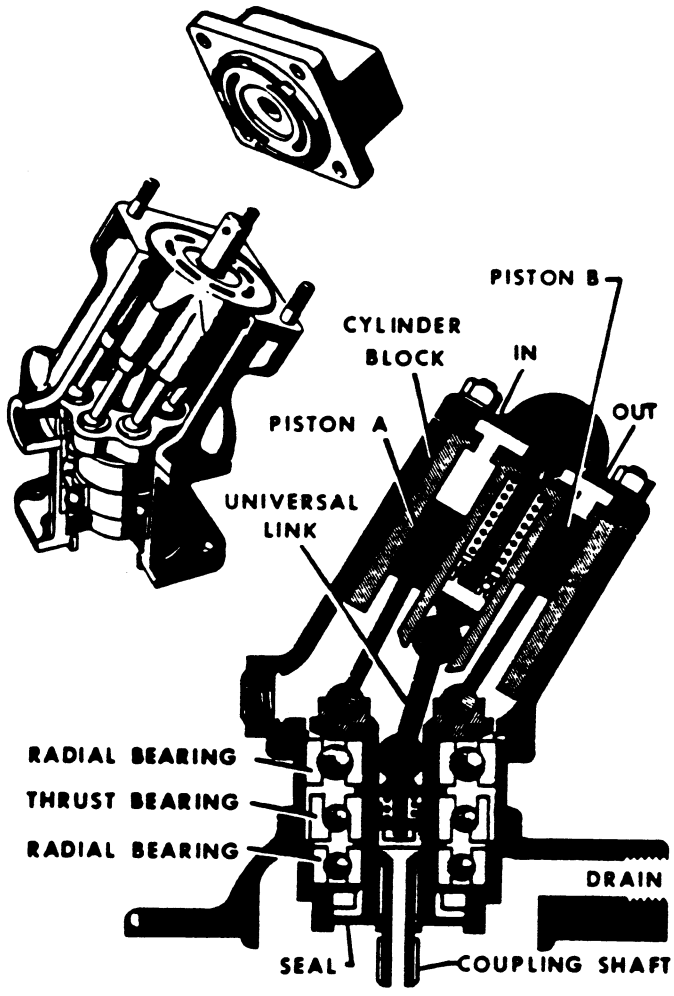
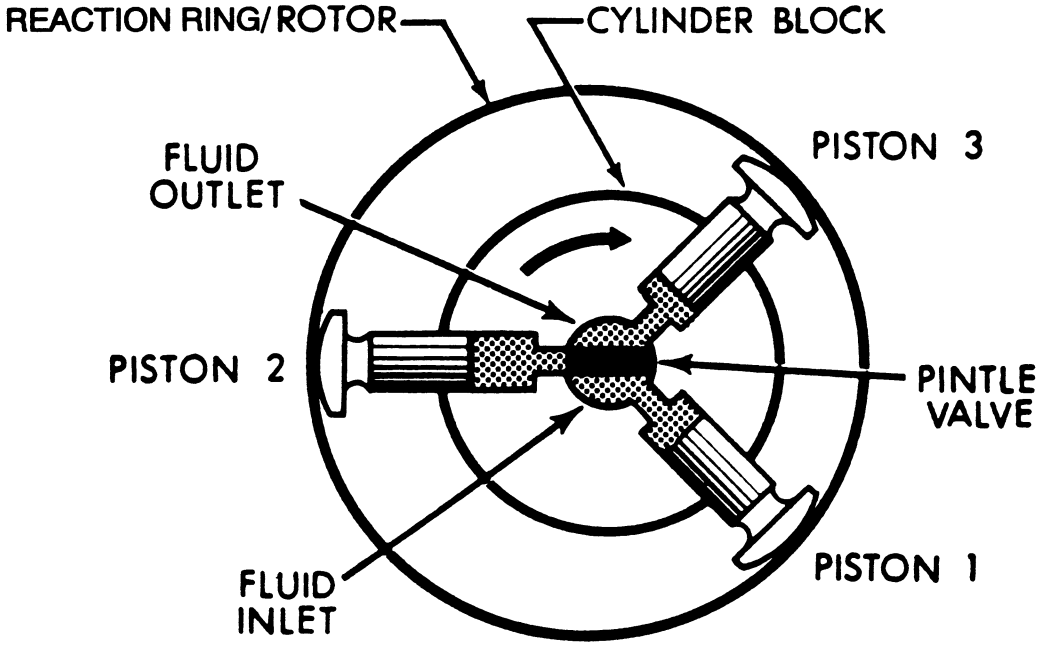
GS-0059