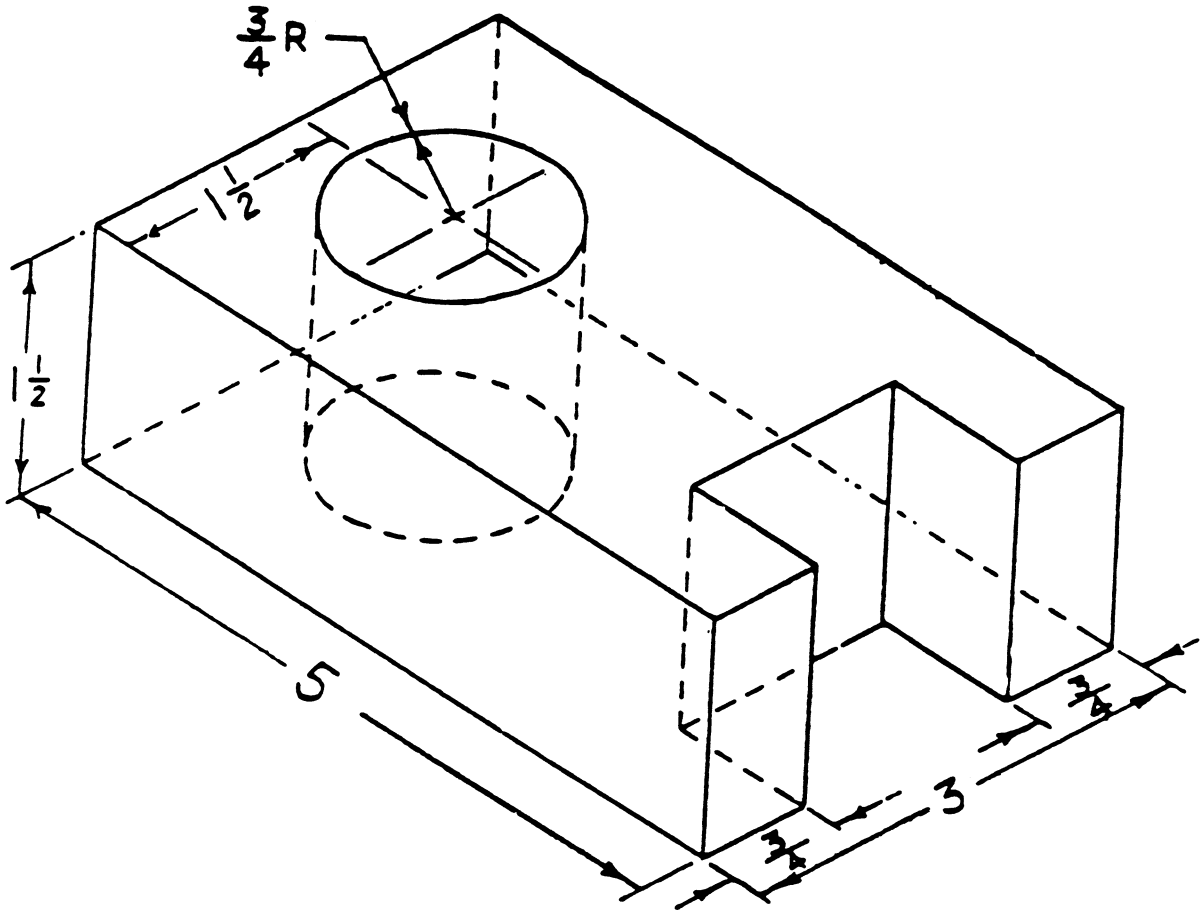
3/4 R
1 1/2
1 1/2
5
3/4
3
3/4

GS-0022

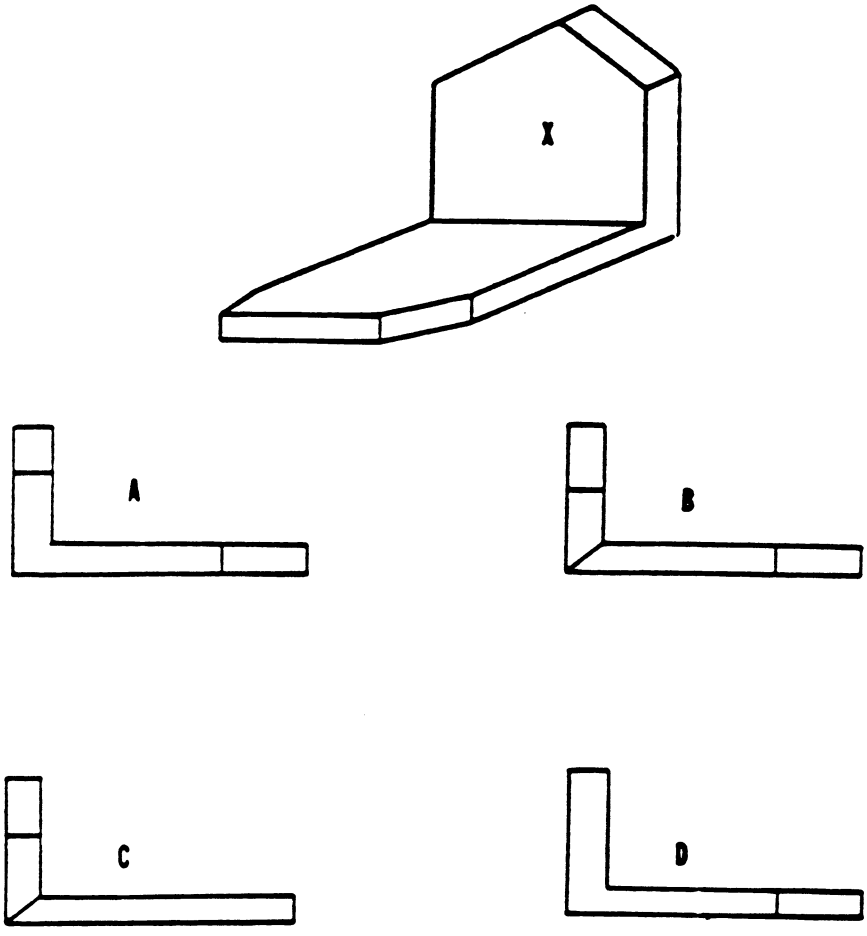

GS-0023

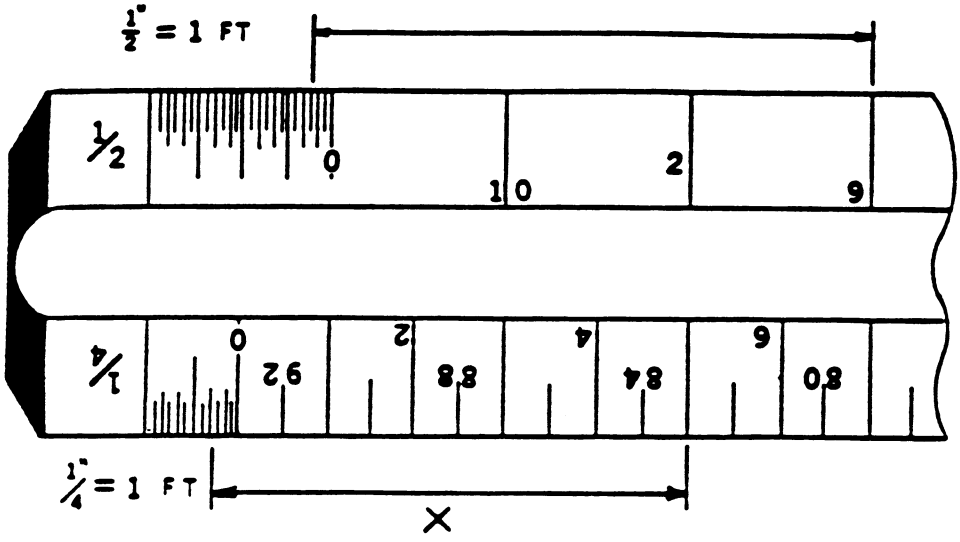

GS-0024

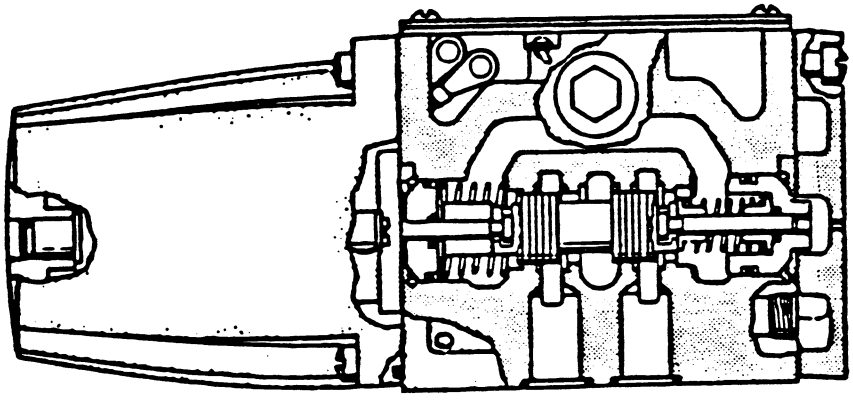

GS-0025

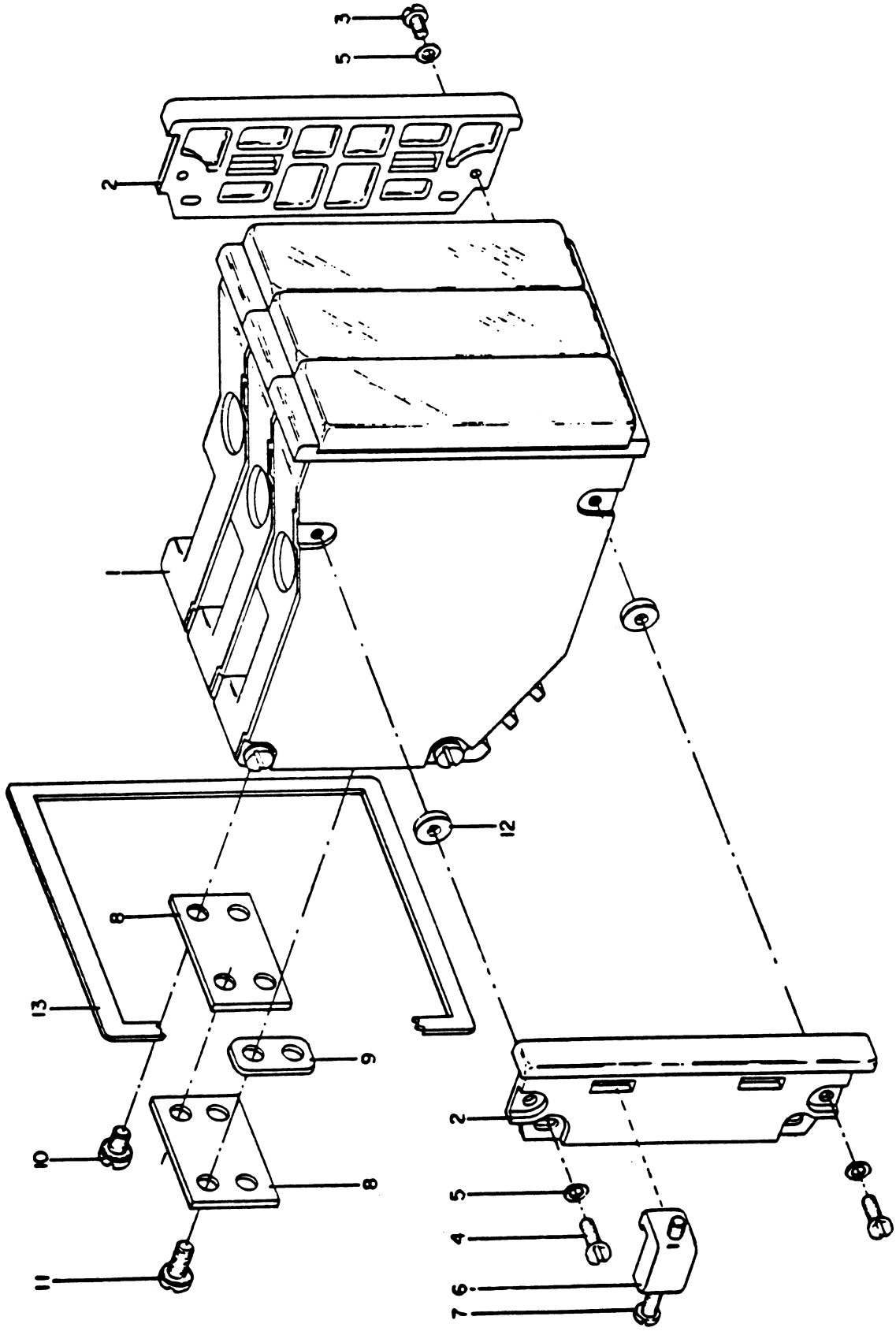

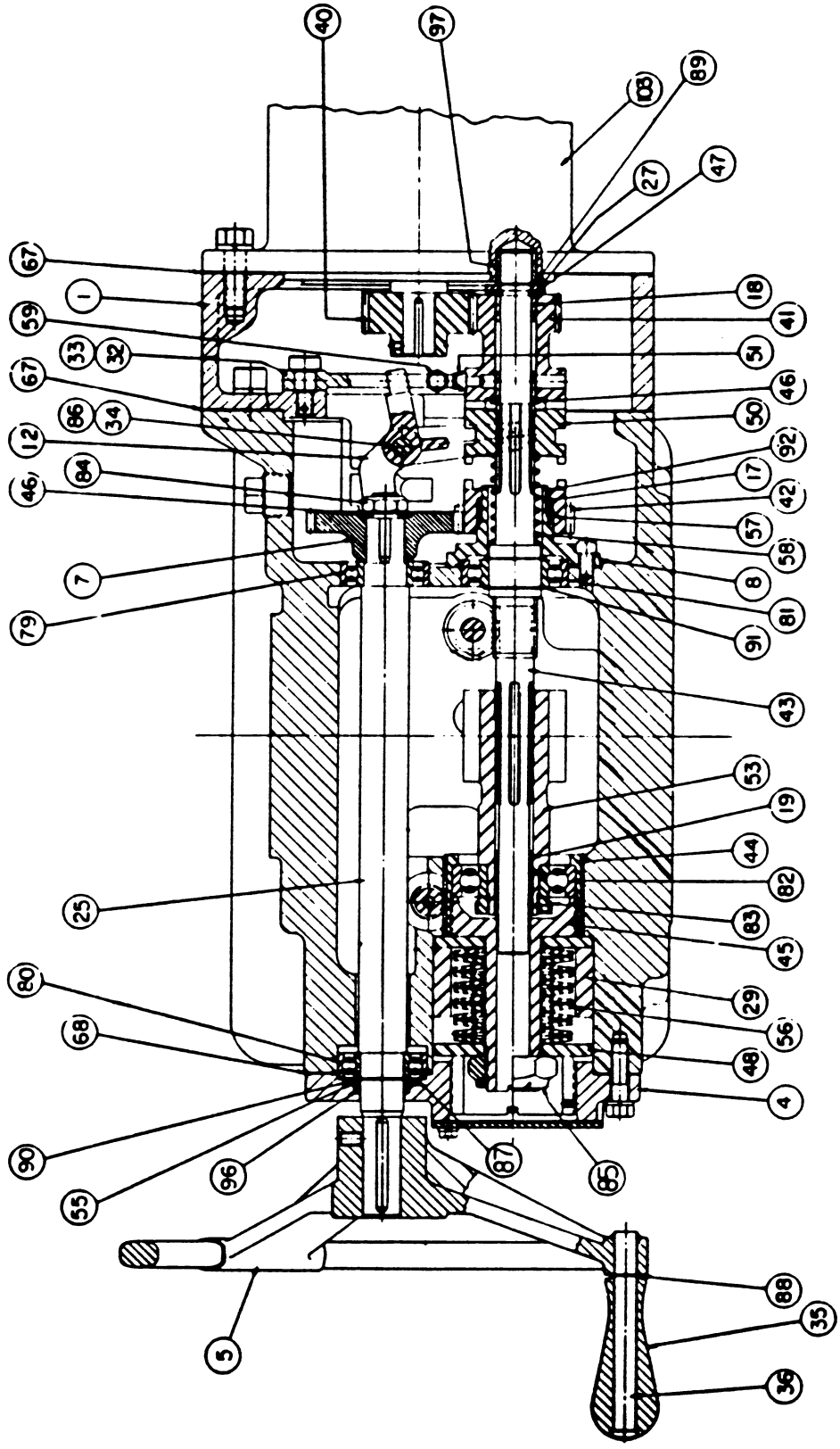

(COURTESY OF LIMITORQUE CORP.)

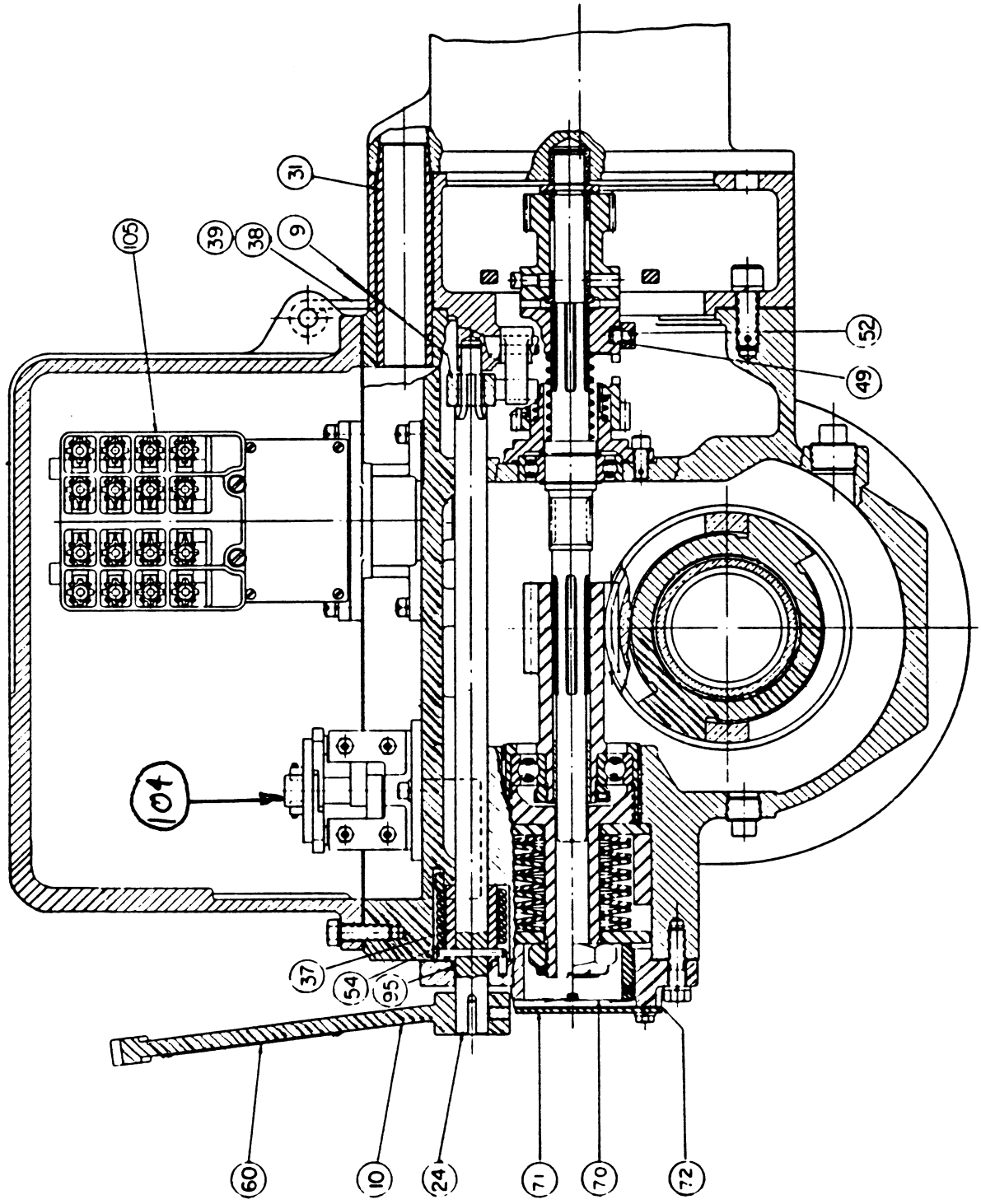

(COURTESY OF LIMITORQUE CORP.)

GS-0028

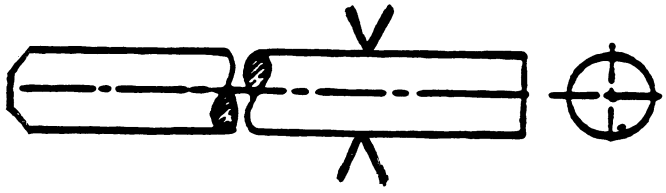

GS-0029

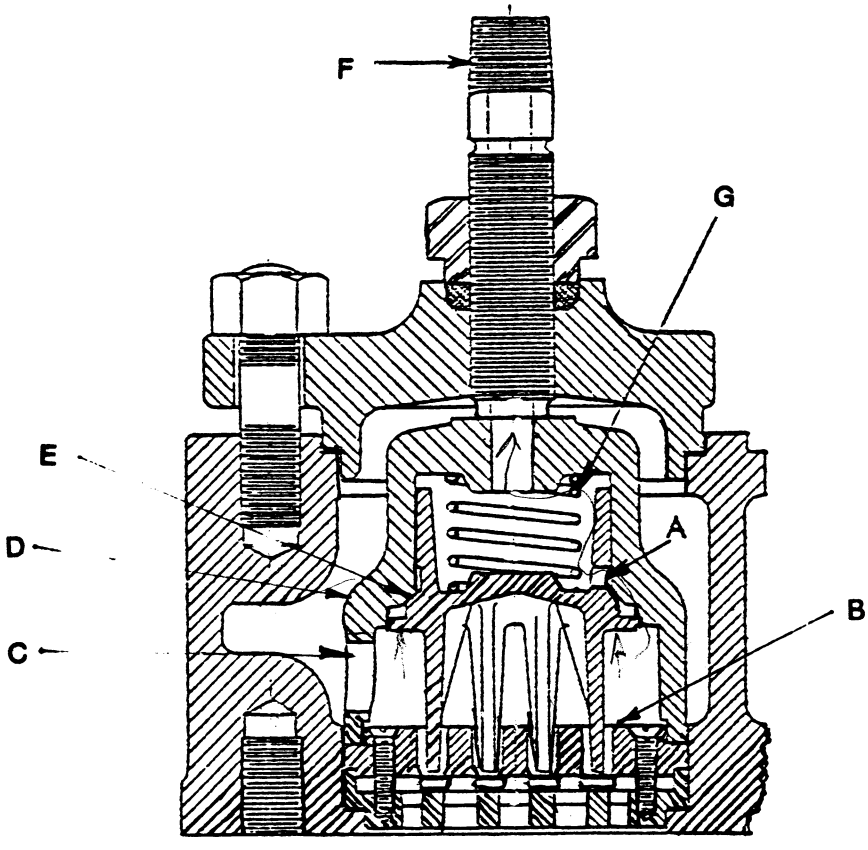

GS-0030

GS-0031

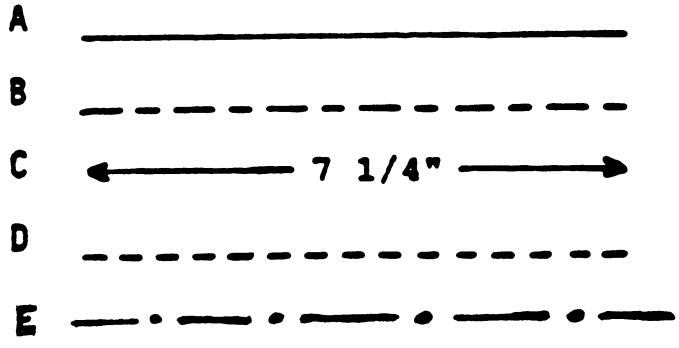

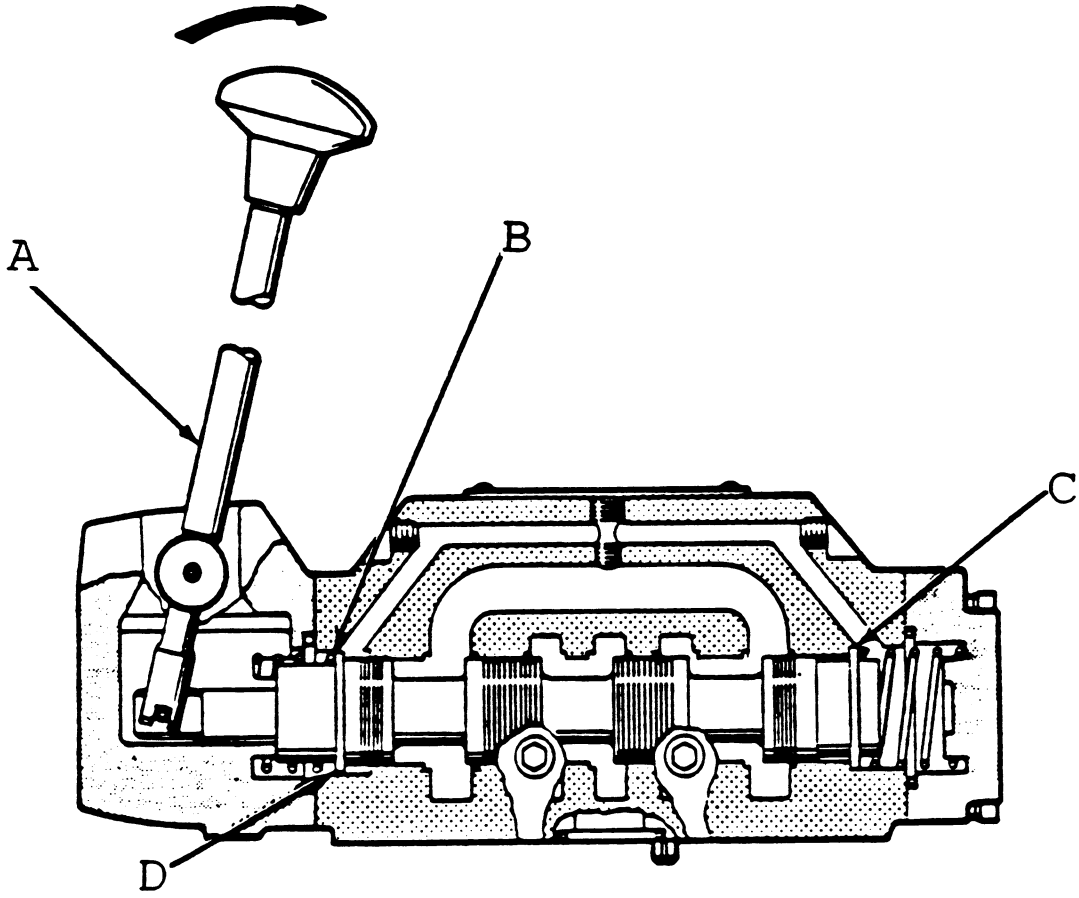
A
B
C
D

GS-0033

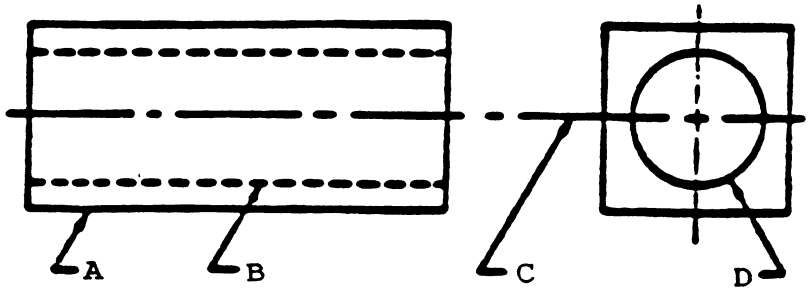

GS-0034

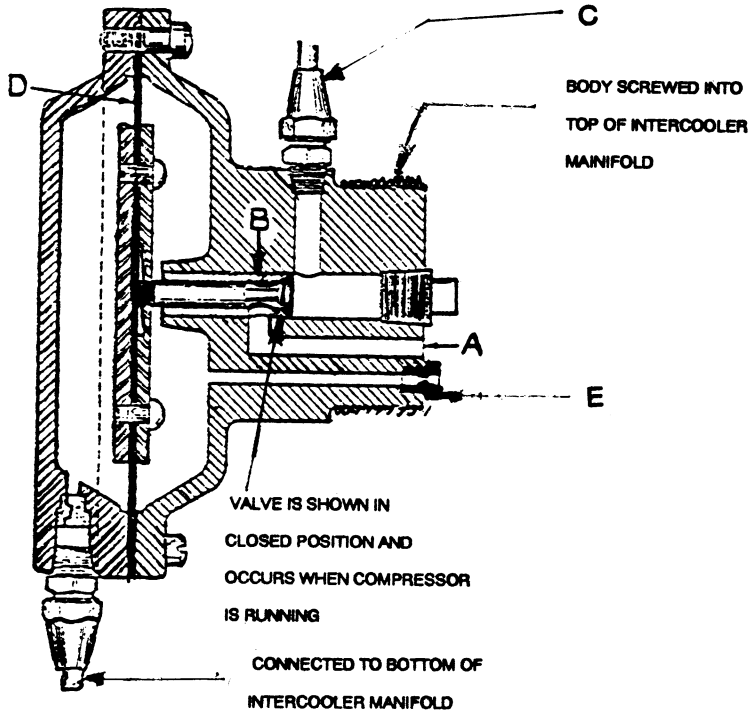

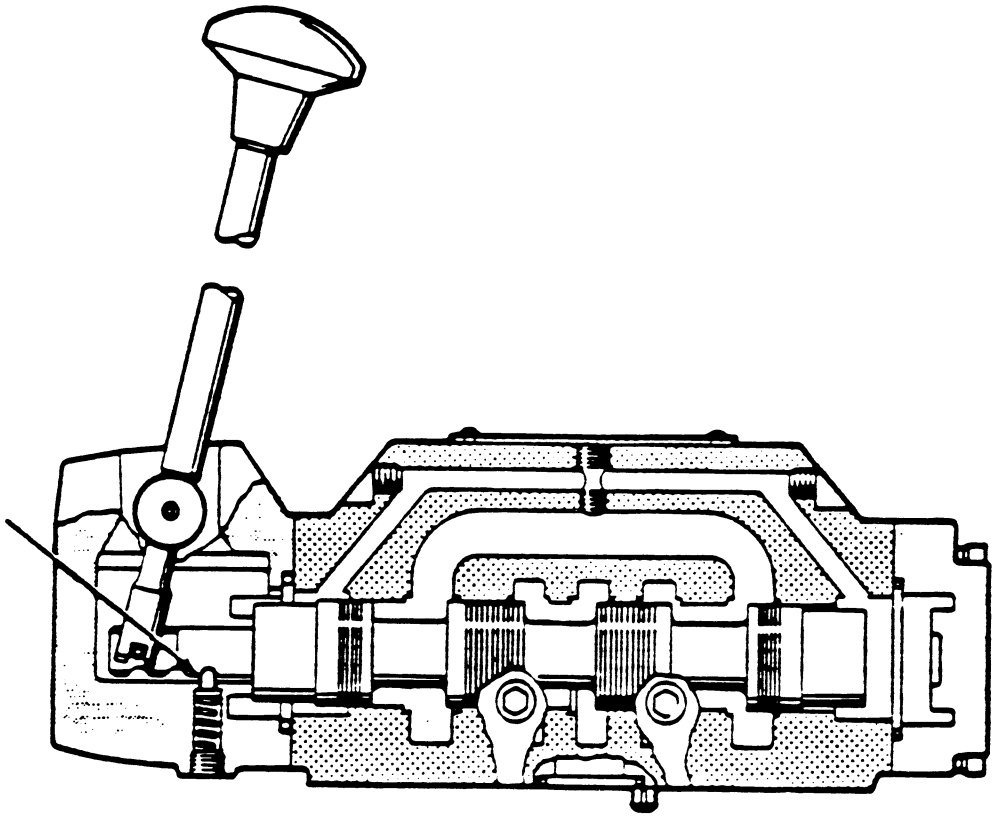

GS-0036

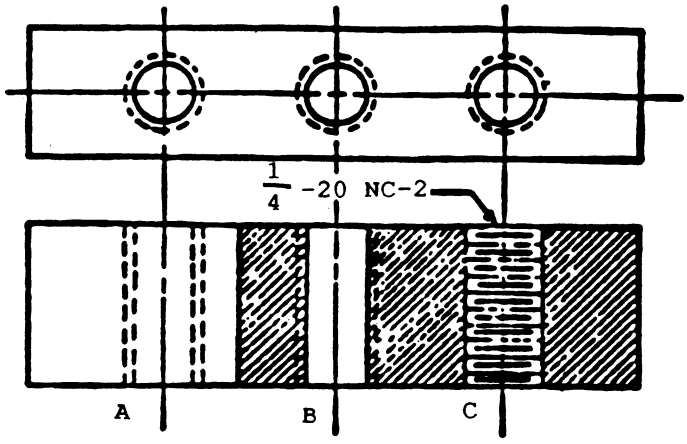

GS-0037

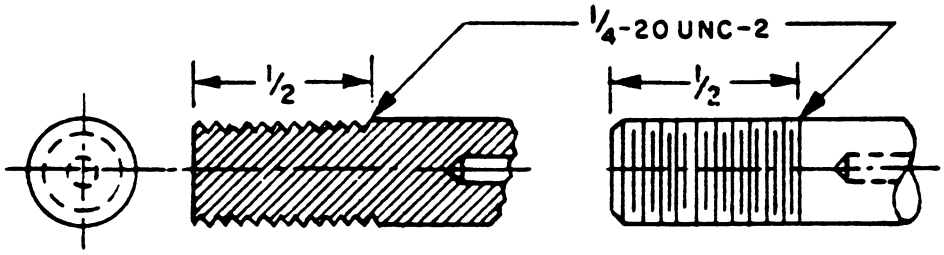

GS-0038

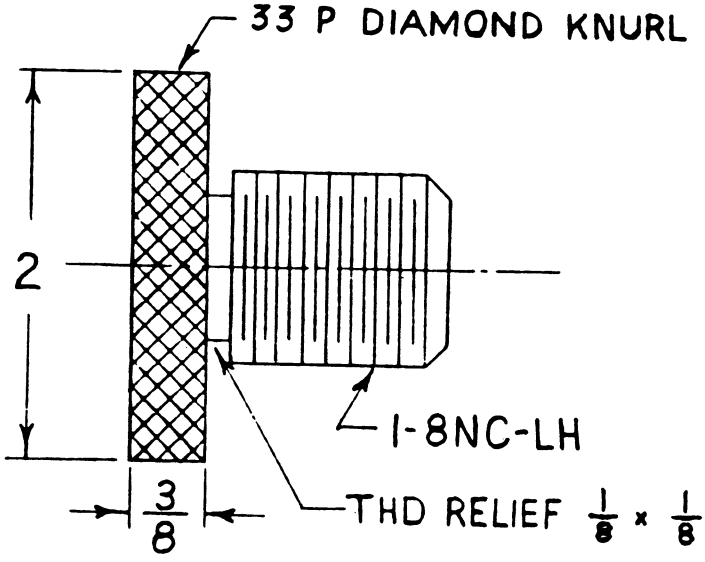

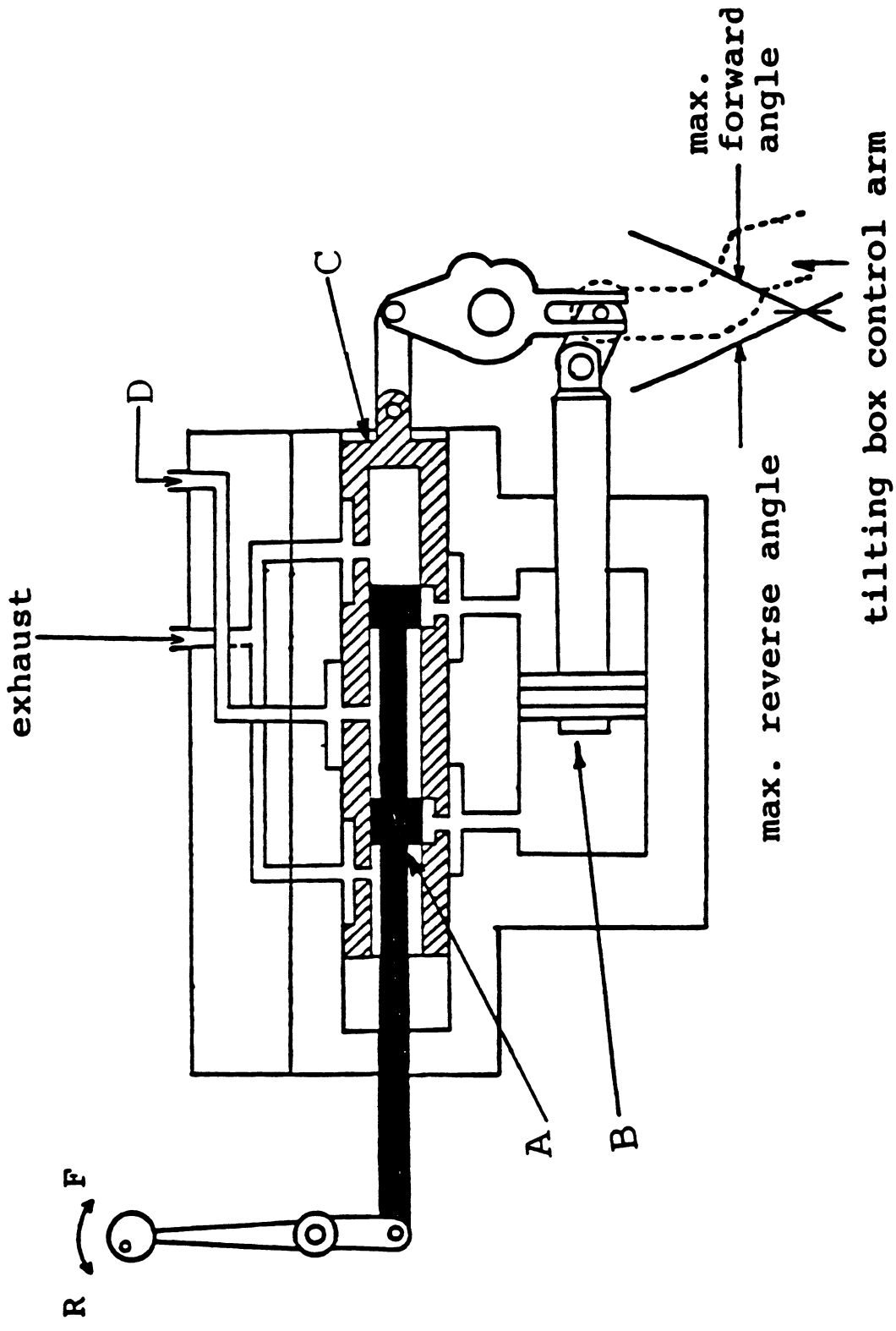
exhaust
D
C
A
B
F
R
max. forward angle
max. reverse angle
tilting box control arm

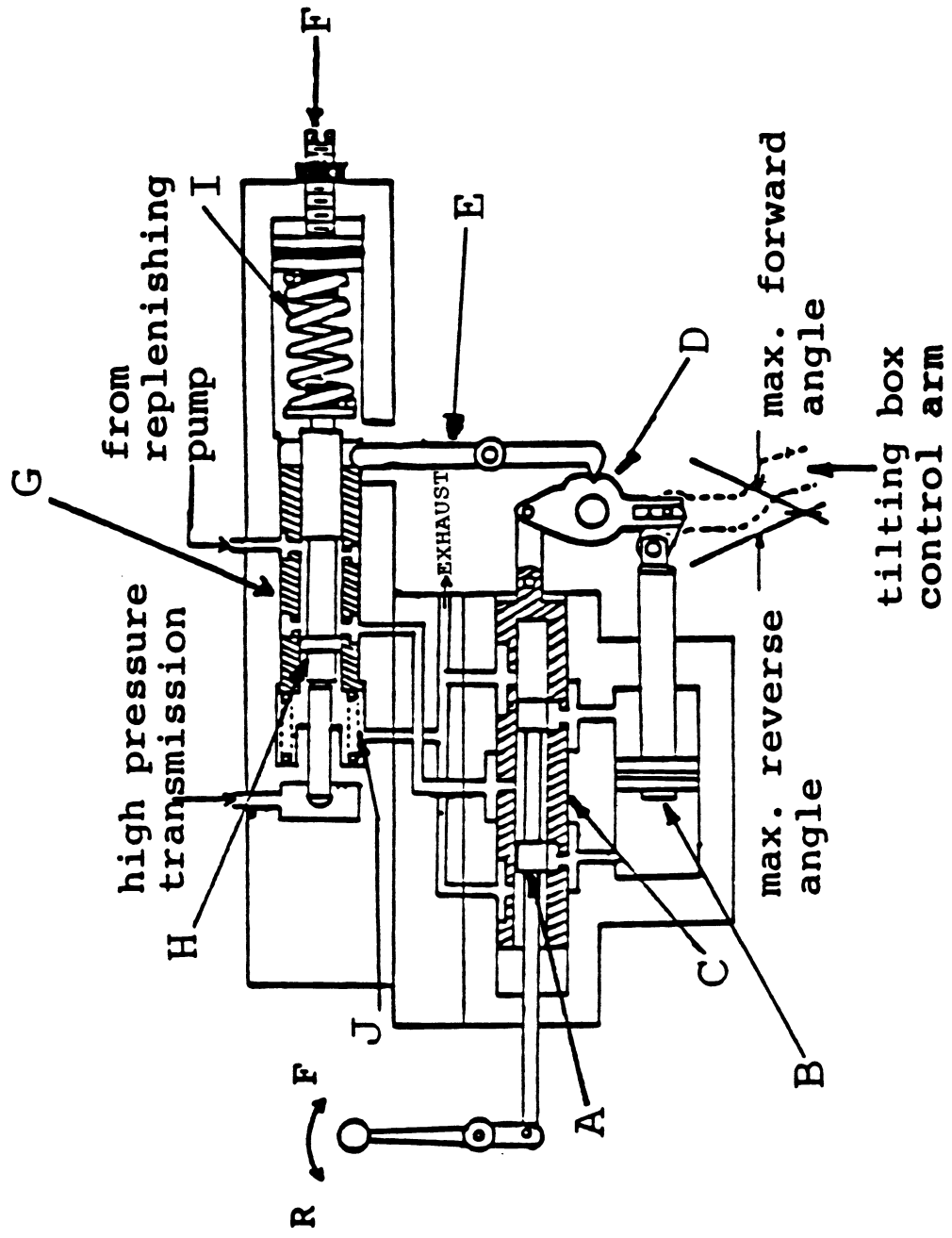
F
I
E
from replenishing pump
G
high pressure transmission
H
J
EXHAUST
D
max. forward angle
tilting box control arm
max. reverse angle
C
B
A
F
R

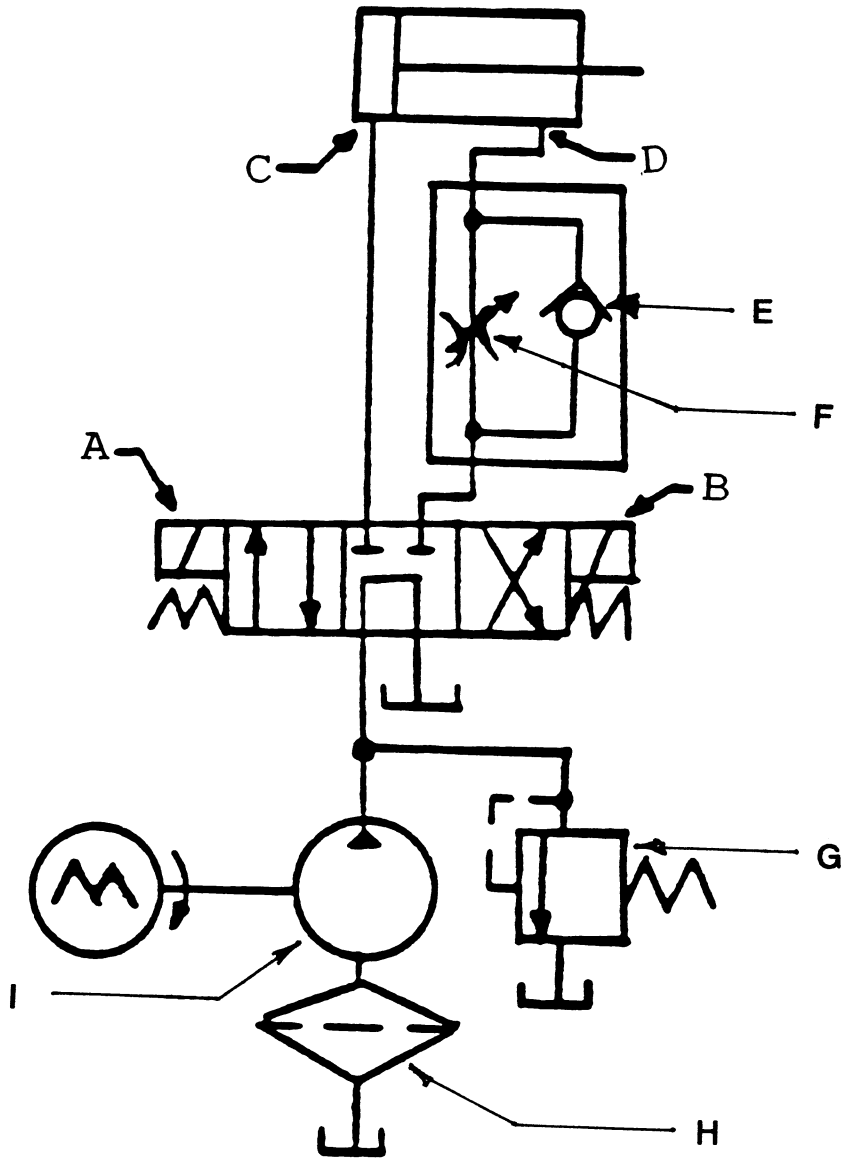
C
D
E
F
A
B
G
I
H